IN THE UNITED STATES PATENT AND TRADEMARK OFFICE

In re Patent of:	Gregory G. Raleigh	
U.S. Patent No.:	9,179,359	Attorney Docket No.: 39843-0181IP1
Issue Date:	November 3, 2015	
Appl. Serial No.:	14/673,625	
Filing Date:	March 30, 2015	
Title:	WIRELESS END-USER DEVICE WITH DIFFERENTIATED NETWORK ACCESS STATUS FOR DIFFERENT DEVICE APPLICATIONS	

Mail Stop Patent Board
Patent Trial and Appeal Board
U.S. Patent and Trademark Office
P.O. Box 1450
Alexandria, VA 22313-1450

PETITION FOR *INTER PARTES* REVIEW OF UNITED STATES PATENT NO. 9,179,359 PURSUANT TO 35 U.S.C. §§ 311–319, 37 C.F.R. § 42

TABLE OF CONTENTS

I. REQUIREMENTS 1

A. Standing 1
B. Challenge 1
C. Claim Construction 2

II. THE '359 PATENT 2

A. Description 2
B. Relevant Prosecution 3

III. UNPATENTABILITY 3

A. GROUND 1A: Shell-Cole Renders Claims 1, 4, 9-11, 13, 14, 18, 19, 21, 23, And 26-28 Obvious 3
1. Shell-Cole 3
2. Analysis 16

B. GROUND 1B: Shell-Cole-Araujo Renders Claims 2, 16-18, 20, 27, and 29 Obvious 50
1. Shell-Cole-Araujo 50
2. Analysis 54

C. GROUND 1C: Shell-Cole-Freund Renders Claims 3-5 Obvious 61
1. Shell-Cole-Freund 61
2. Analysis 64

D. GROUND 1D: Shell-Cole-Montemurro Renders Claims 6-8, 12, 15, 22, 24, And 25 Obvious 66
1. Shell-Cole-Montemurro 66
2. Analysis 70

IV. DISCRETIONARY DENIAL 80

A. §314(a) 80

V. CONCLUSION 81

VI. MANDATORY NOTICES UNDER 37 C.F.R. § 42.8(a)(1) 81

A. Real Party-In-Interest Under 37 C.F.R. § 42.8(b)(1) 81
B. Related Matters Under 37 C.F.R. § 42.8(b)(2) 81
C. Lead And Back-Up Counsel Under 37 C.F.R. § 42.8(b)(3) 81
D. Service Information 82

EXHIBITS

SAMSUNG-1001	U.S. Patent No. 9,179,359 to Raleigh ("the '359 patent")
SAMSUNG-1002	Excerpts from the Prosecution History of the '359 patent ("the Prosecution History")
SAMSUNG-1003	Declaration and Curriculum Vitae of Dr. Kevin Butler
SAMSUNG-1004	Complaint for Patent Infringement in *Headwater Research LLC v. Samsung Electronics Co., Ltd. et al.*, 2-23-cv-00641 (EDTX), Dec. 29, 2023)
SAMSUNG-1005	U.S. Pat. App. Pub. No. 2004/0224668 ("Shell")
SAMSUNG-1006	U.S. Pat. App. Pub. No. 2008/0080458 ("Cole")
SAMSUNG-1007	RESERVED
SAMSUNG-1008	U.S. Pat. App. Pub. No. 2009/0217065 ("Araujo")
SAMSUNG-1009	U.S. Pat. App. Pub. No. 2009/0207817 ("Montemurro")
SAMSUNG-1010	International Publication No. WO 03/100581 ("Dive-Reclus")
SAMSUNG-1011	David Flanagan, O'Reilly & Associates, Inc., "Java in a Nutshell," 1996, ISBN: 1-56592-183-6
SAMSUNG-1012	U.S. Pat. No. 5,987,611 ("Freund")
SAMSUNG-1013	U.S. Pat. App. Pub. No. 2009/0210537 ("Irwin")
SAMSUNG-1014	Korhonen, "Host Identity Protocol (HIP) Implementation in the Symbian Environment," Master of Science Thesis, Tampere University of Technology (12/10/2007) ("Korhonen")
SAMSUNG-1015	U.S. Pat. No. 8,886,261 ("Aerrabotu")
SAMSUNG-1016	Welsh, "Incorporating Memory Management into User-Level Network Interfaces." IEEE Micro, 18(2), 1998, 10 pages ("Welsh")

SAMSUNG-1017 U.S. Pat. App. Pub. No. 2009/0093247 to Srinivasan ("Srinivasan")

SAMSUNG-1018 U.S. Pat. App. Pub. No. 2006/0039354 ("Rao")

SAMSUNG-1019 Carter, Casey et al., "Contact networking: a localized mobility system," Proceedings of the 1st International Conference on Mobile systems, Applications and Services, 2003 ("Carter")

SAMSUNG-1020 U.S. Pat. No. 8,413,172 ("Sng")

SAMSUNG-1021 S. Lee & N. Golmie, "Power-Efficient Interface Selection Scheme using Paging of WWAN for WLAN in Heterogeneous Wireless Networks," 2006 IEEE International Conference on Communications (Istanbul, 2006), 1742–1747 ("Lee")

SAMSUNG-1022 M. Stemm et al., "A network measurement architecture for adaptive applications," Proceedings of the 2000 IEEE INFOCOM Conference on Computer Communications. Nineteenth Annual Joint Conference of the IEEE Computer and Communications Societies (Cat. No.00CH37064), Tel Aviv, Israel, 2000, 285-294 ("Stemm")

SAMSUNG-1023 K. Ravindran & V. Bansal, "Delay compensation protocols for synchronization of multimedia data streams," IEEE Transactions on Knowledge and Data Engineering, Vol. 5, No. 4, 574-589, Aug. 1993 ("Ravindran")

SAMSUNG-1024 D. C. Verma, "Simplifying network administration using policy-based management." IEEE Network, Vol. 16, No. 2, 20-26, Mar. 2002 ("Verma")

SAMSUNG-1025 G. Nychis & D. R. Licata, "The impact of background network traffic on foreground network traffic." Proceedings of the IEEE Global Telecommunications Conference (GLOBECOM), 2001 ("Nychis")

SAMSUNG-1026 I. Pronchev. "Packet Capturing Using the Linux Netfilter Framework." Technical Report, Technische Universität München, 1-31, July 2006 ("Pronchev")

SAMSUNG-1027 A.-J. Moerdijk and L. Klostermann, "Opening the networks with Parlay/OSA: standards and aspects behind the APIs." IEEE Network, vol. 17, no. 3, pp. 58-64, May-June 2003 ("Moerdijk")

SAMSUNG-1028 J. B. D. Joshi, E. Bertino, U. Latif and A. Ghafoor, "A generalized temporal role-based access control model." IEEE Transactions on Knowledge and Data Engineering, vol. 17, no. 1, pp. 4-23, Jan. 2005 ("Joshi")

SAMSUNG-1029 Lymberopoulos et al., "An Adaptive Policy-Based Framework for Network Services Management," Journal of Network and Systems Management, Vol. 11, No. 3, September 2003 ("Lymberopoulos")

SAMSUNG-1030 Richard Stevens et al., "UNIX Network Programming Volume 1, Third Edition: The Sockets Networking API," 2004, ISBN: 0-13-141155-1

SAMSUNG-1031-SAMSUNG-1050 RESERVED

SAMSUNG-1051 Memorandum, Interim Procedure for Discretionary Denials in AIA Post-Grant Proceedings with Parallel District Court Litigation (USPTO June 21, 2022) ("Director's Guidance")

SAMSUNG-1052 Samsung Stipulation letter regarding IPR grounds in District court litigation

SAMSUNG-1053 Federal Court Management Statistics (December 31, 2023)

CLAIMS

Claim	Identifier	Claim Language
1	[1.pre]	A wireless end-user device, comprising:
	[1.1]	a wireless wide area network (WWAN) modem to receive and transmit Internet data between the device and at least one WWAN when configured for and connected to the at least one WWAN;
	[1.2]	a wireless local area network (WLAN) modem to receive and transmit Internet data between the device and at least one WLAN when configured for and connected to the at least one WLAN; and
	[1.3]	one or more processors configured to apply a stored WWAN differential traffic control policy to Internet data service provided using the WWAN modem and the at least one WWAN, and
	[1.4]	indicate to a particular application, via an application program interface (API), one or more network access conditions based on the applied WWAN differential traffic control policy,
	[1.5]	wherein the one or more network access conditions includes a network access condition that indicates the unavailability to the particular application of an Internet data service that is currently available via the WWAN modem to a different application, but that is indicated as unavailable to the particular application.
2	[2]	The wireless end-user device of claim 1, wherein the API indicates the unavailability to the particular application of an Internet data service that is currently available by emulating network messaging.
3	[3]	The wireless end-user device of claim 1, wherein the one or more processors are further configured to apply the differential traffic control policy to the particular application when a user of the device is not directly interacting with the particular application or perceiving any benefit from the particular application.
4	[4]	The wireless end-user device of claim 1, further comprising a user interface to provide a user of the device with information regarding why the differential traffic control policy is applied to the particular application.

5	[5]	The wireless end-user device of claim 1, further comprising a user interface to inform a user of the device when there are options to set, control, override, or modify service usage controls that affect the differential traffic control policy.
6	[6]	The wireless end-user device of claim 1, wherein the differential traffic control policy is part of a multimode profile having different policies for different networks.
7	[7]	The wireless end-user device of claim 6, wherein the one or more processors are further configured to select a traffic control policy from the multimode profile based at least in part on the type of network connection currently in use by the device.
8	[8]	The wireless end-user device of claim 7, wherein the one or more processors are further configured to, when the type of network connection is at least one type of WLAN connection, select a traffic control policy from the multimode profile based at least in part on a type of network connection from the WLAN to the Internet.
9	[9]	The wireless end-user device of claim 1, further comprising a network stack interface integrated with the API.
10	[10.1]	The wireless end-user device of claim 1, further comprising a networking stack,
	[10.2]	wherein the one or more processors are further configured to, at an application service interface layer, identify application traffic flows prior to the flows entering the networking stack.
11	[11]	The wireless end-user device of claim 1, wherein the API comprises a network access API.
12	[12]	The wireless end-user device of claim 1, wherein the one or more network access conditions indicated via the API to the particular application comprises information on whether a current connected WWAN is a roaming network or a non-roaming network.
13	[13]	The wireless end-user device of claim 1, wherein the API informs the particular application when it is allowed to access Internet data service that is currently available via the WWAN modem.
14	[14]	The wireless end-user device of claim 1, wherein the API informs the particular application of one or more network traffic controls that the application is expected to implement.

15	[15]	The wireless end-user device of claim 1, wherein the API instructs the particular application to transition to a different state.
16	[16]	The wireless end-user device of claim 1, wherein the API instructs the device to transition to a power save state.
17	[17]	The wireless end-user device of claim 1, wherein the one or more processors are further configured to dynamically change the application of the stored WWAN differential traffic control policy based on a power state of the device.
18	[18]	The wireless end-user device of claim 1, wherein the one or more processors are further configured to dynamically change the application of the stored WWAN differential traffic control policy based on a device usage state.
19	[19]	The wireless end-user device of claim 1, wherein the one or more processors are further configured to dynamically change the application of the stored WWAN differential traffic control policy based on monitoring of user interaction with the device.
20	[20]	The wireless end-user device of claim 1, wherein the one or more processors are further configured to dynamically change the application of the stored WWAN differential traffic control policy based on power control state changes for one or more of the modems.
21	[21]	The wireless end-user device of claim 1, wherein the one or more processors are configured to associate the particular application with the differential traffic control policy based on an application behavior.
22	[22]	The wireless end-user device of claim 1, wherein the differential traffic control policy defines that applications to which the policy applies can only have WWAN network access events during particular time windows.
23	[23.1]	The wireless end-user device of claim 1, further comprising a network stack interface that intercepts network socket interface messages for applications and OS functions,
	[23.2]	the one or more processors configured to apply the stored WWAN differential traffic control policy to at least some of the intercepted network socket interface messages.
24	[24]	The wireless end-user device of claim 1, wherein the one or more processors are further configured to update the stored WWAN differential traffic control policy based on information received from a network element.

25	[25.1]	The wireless end-user device of claim 1, the WWAN differential traffic control policy comprising first and second differential traffic control policies applicable respectively to Internet data service provided using the WWAN modem to connect to a home WWAN and a roaming WWAN,
	[25.2]	wherein the one or more processors are further configured to apply the first differential traffic control policy when Internet data service is provided through a home WWAN and to apply the second differential traffic control policy when Internet data service is provided through a roaming WWAN.
26	[26]	The wireless end-user device of claim 1, wherein the one or more processors are further configured to determine that the different application is an active application based on a user interaction with the different application.
27	[27]	The wireless end-user device of claim 1, further comprising an agent to block, modify, remove, or replace user interface messages generated by the particular application based on the applied WWAN differential traffic control policy.
28	[28]	The wireless end-user device of claim 1, wherein the one or more processors are configured to apply the stored WWAN differential traffic control policy to selectively block network access by the particular application by intercepting open, connect, and/or write requests by the particular application to a network stack.
29	[29]	The wireless end-user device of claim 2, wherein emulating network messaging comprises responding to a network request from the particular application by blocking the request from passing to a network stack and returning to the particular application a message indicating the network request was not successful.

Samsung Electronics Co., Ltd. ("Petitioner," "Samsung") petitions for *Inter Partes* Review ("IPR") of claims 1-29 ("the Challenged Claims") of U.S. Patent No. 9,179,359 ("the '359 patent").

I. REQUIREMENTS

A. Standing

Petitioner certifies that the '359 patent is available for IPR. Petitioner is not barred or estopped from requesting this review. Petitioner was served with a complaint of infringement of the '359 patent less than one year ago. SAMSUNG-1004; SAMSUNG-1052.

B. Challenge

Samsung requests IPR of the Challenged Claims on the grounds noted below, with supporting declaration testimony from Dr. Kevin Butler. SAMSUNG-1003, ¶¶13, 16-36.

Ground	Claim(s)	§103
1A	1, 4, 9-11, 13, 14, 18, 19, 21, 23, 26-28	Shell, Cole
1B	2, 16-18, 20, 27, 29	Shell, Cole, Araujo
1C	3-5	Shell, Cole, Freund
1D	6-8, 12, 15, 22, 24, 25	Shell, Cole, Montemurro

The '359 patent claims priority to several provisional applications as early as 1/28/2009 ("Critical Date"). SAMSUNG-1002, Cover. Petitioner does not concede that the Critical Date is the priority date of the '359 patent. The

references are prior art under §§102(a), 102(b), and/or 102(e).

Reference	Filing Date	Publication Date
Shell	2/1/2002	11/11/2004
Cole	9/29/2006	4/3/2008
Freund	5/6/1997	11/16/1999
Araujo	2/26/2008	8/27/2009
Montemurro	2/15/2008	8/20/2009

C. Claim Construction

Petitioner submits that no formal claim constructions are necessary because "claim terms need only be construed to the extent necessary to resolve the controversy." *Wellman, Inc. v. Eastman Chem. Co.*, 642 F.3d 1355, 1361 (Fed. Cir. 2011); SAMSUNG-1003, ¶42. Petitioner reserves the right to respond to any constructions offered by Patent Owner or adopted by the Board. Petitioner is not conceding that each challenged claim satisfies all statutory requirements, nor is Petitioner waiving any arguments concerning claim scope or grounds that can only be raised in district court.

II. THE '359 PATENT

A. Description

The '359 patent is directed to a wireless device that uses policies to control access to wireless networks by applications running on the device. SAMSUNG-1001, Abstract. The device determines aspects of the policy based on user input obtained through a user interface. SAMSUNG-1003, ¶¶37-40.

B. Relevant Prosecution

The Examiner issued Application Serial No. 14/673,625 without issuing any Office Action. SAMSUNG-1002, 122-28, 691-98, 873. Shell, Araujo, and Montemurro were never substantively applied in prosecution. SAMSUNG-1001, Cover; SAMSUNG-1003, ¶41.

III. UNPATENTABILITY

A. GROUND 1A: Shell-Cole Renders Claims 1, 4, 9-11, 13, 14, 18, 19, 21, 23, And 26-28 Obvious

1. Shell-Cole

(a) Shell[1]

Shell focuses on "[i]ncreasing the level of automation when establishing and managing network connections." SAMSUNG-1005, Abstract. This is accomplished using "connection manager" modules that "relieve[] users from having to know detailed information about [a] remote resource and [a] destination network." *Id.* Specifically, "[w]hen the connection manager receives a request to access a remote resource," it uses "extensible decision logic to identify a most appropriate connection method for connecting to a destination network." *Id.* Through its connection manager modules, the Shell system "abstract[s] connection information from a user so as to limit required user interactions when creating network connections." *Id.*, [0003]; SAMSUNG-1003, ¶43.

---

[1] Descriptions of the references and prior art combinations are incorporated into each mapping. All emphasis is added unless otherwise indicated.

Shell recognizes that "conditions associated with a network may make establishment of a connection using a particular connection method undesirable at certain times," e.g., if a network is experiencing "heavy usage" or "high degree of latency." SAMSUNG-1005, [0007]. This is because a user may not be "aware of the costs associated with different types of connections" and thus may use a "less desirable connection method to access a resource." *Id.* Beyond this issue, Shell attributes "[o]ther problems associated with connection methods [that] also exist at the programming level." *Id.*, [0009]. Because "[m]ost connection methods utilize different Application Program Interfaces ('APIs') when establishing a connection[,]" they may require different APIs or "different parameters," which "[r]equires programmers to know the nuances of different connection methods" and thereby may be "time consuming" and lead to reduced efficiency. *Id*. Shell thus focuses on "automating the establishment and management of various kinds of network connections in a manner that reduces the amount of information a user must know to establish a connection." *Id*., [0011]. In this way, "[a] user does not need to identify the underlying properties of the network where the resource is located or a connection method for getting to that network." *Id.*, [0012]; SAMSUNG-1003, ¶44.

During operation, "an application included in a computing device may request access to a remote resource located in a destination network." SAMSUNG-1005, [0033]. A connection manager (or "connection planner") "analyzes a variety of factors to determine the most appropriate connection method

to connect to the destination network." *Id.* Examples of factors include "local resources currently available on the computing device, the priority of the request, or connection parameters (such as latency, cost, and bandwidth) associated with a connection method." *Id.* "When the most appropriate connection method is known, a connection service provider associated with the connection manager may cause a system level [API] to create a connection from a local computing device to the destination network." *Id.*; SAMSUNG-1003, ¶45.

Figure 1 shows an example of a "suitable computing environment" for the techniques disclosed throughout Shell. SAMSUNG-1005, [0037].

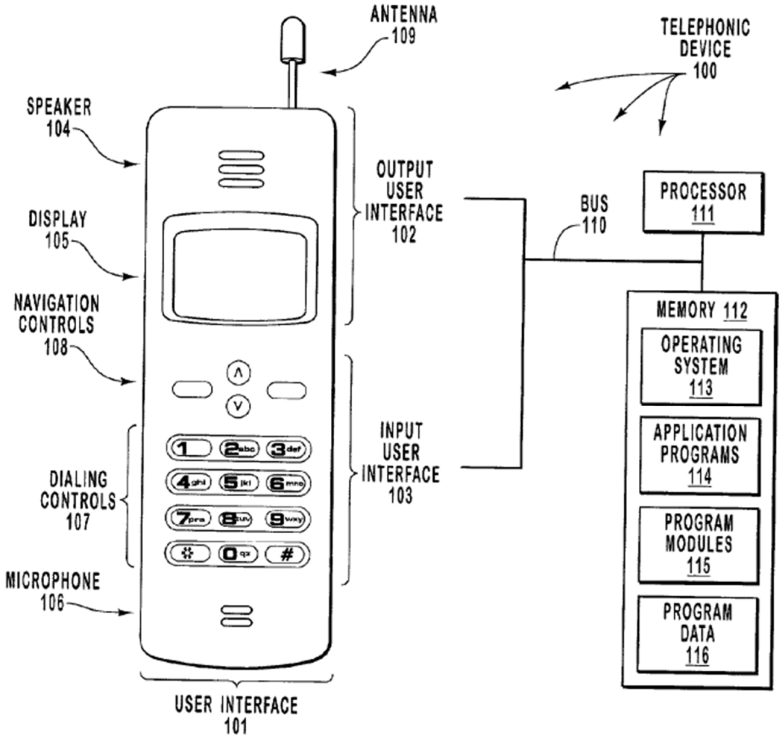

FIG. 1

SAMSUNG-1005, FIG. 1

The operating environment includes a "telephonic device 100" as a "general-purpose computing device" with standard computing elements for "complex and flexible general-purpose processing capabilities." SAMSUNG-1005, [0039]; *id.*, [0038]-[0044]; SAMSUNG-1003, ¶46.

Figure 2 shows an "arrangement" of "functional components" that "offers a level of abstraction between application modules that may request a connection, and the system level APIs that actually establish the connections." SAMSUNG-1005, [0045].

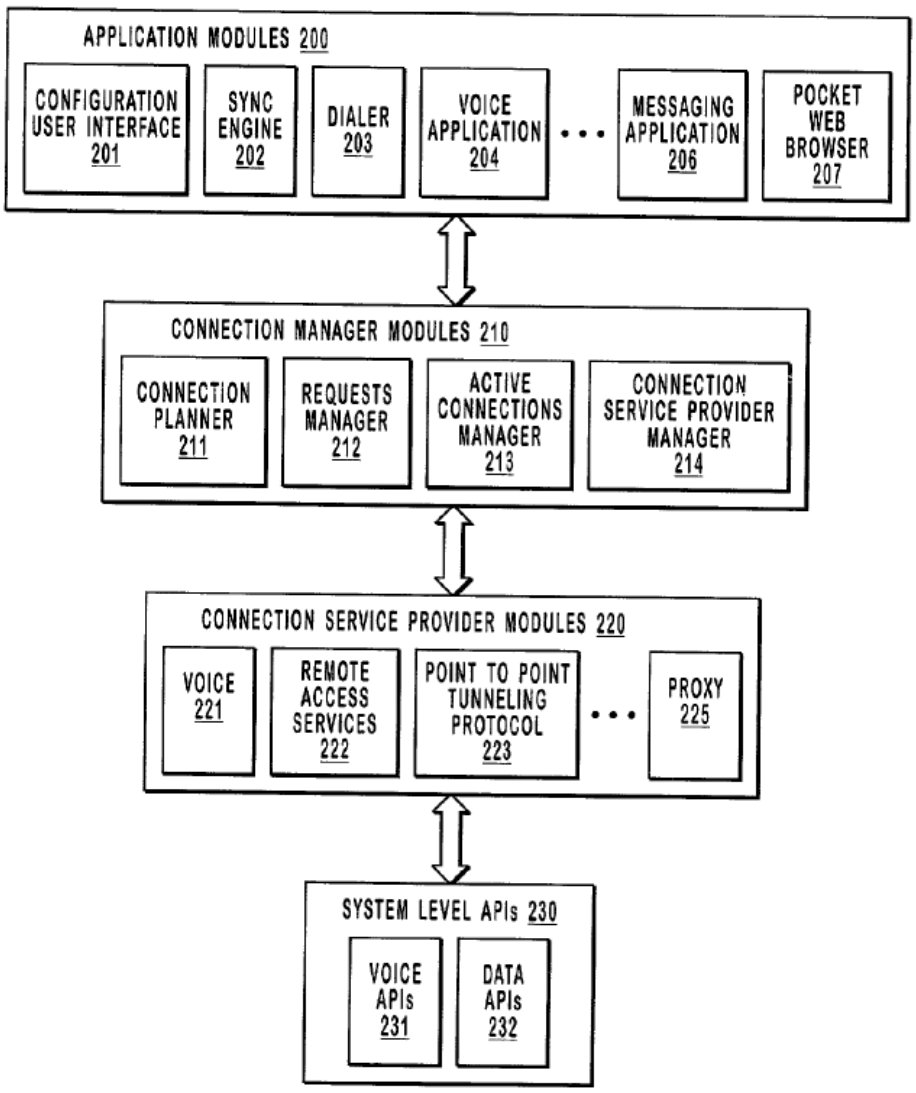

FIG. 2

SAMSUNG-1005, FIG. 2

Specifically, "[c]onnection manager modules 210 and connection service provider modules 220 may be configured as APIs that receive standard data when being called by another module." SAMSUNG-1005, [0046]. These modules "include computer-executable instructions that cause, directly or indirectly, the appropriate calls to be sent to system level APIs 230[,]" thereby simplifying

the process of establishing connections for application modules 200. *Id*. Further, "APIs associated with connection manager modules 210 and connection service provider modules 220 may be integrated into protocol stacks." *Id.*, [0048]. Thus, "APIs associated with connection manager modules 210 and connection service provider modules 220 may be called instead of APIs associated with conventional protocol stacks." *Id.*; SAMSUNG-1003, ¶47.

Further, "connection manager modules 210 may cause resources to be released from and allocated to connection methods." SAMSUNG-1005, [0092]. "When this occurs, connection manager modules 210 may notify application modules 200 of such changes[,]" e.g., "application modules may be notified that a connection will be established, that a connection is currently active, that connection is being disconnected, that no connection is currently active, that a connection to a resource is blocked for some reason…" *Id.* Connection manager modules 210 may also "provide connection specific parameters to application modules 200 including, bandwidth, latency, power consumption, cost, physical location, past connection successes, or other parameters…" *Id.*; SAMSUNG-1003, ¶48.

Figure 5A shows an example of a technique of network connection request handling based on prioritization of network connection requests. SAMSUNG-1005, [0057].

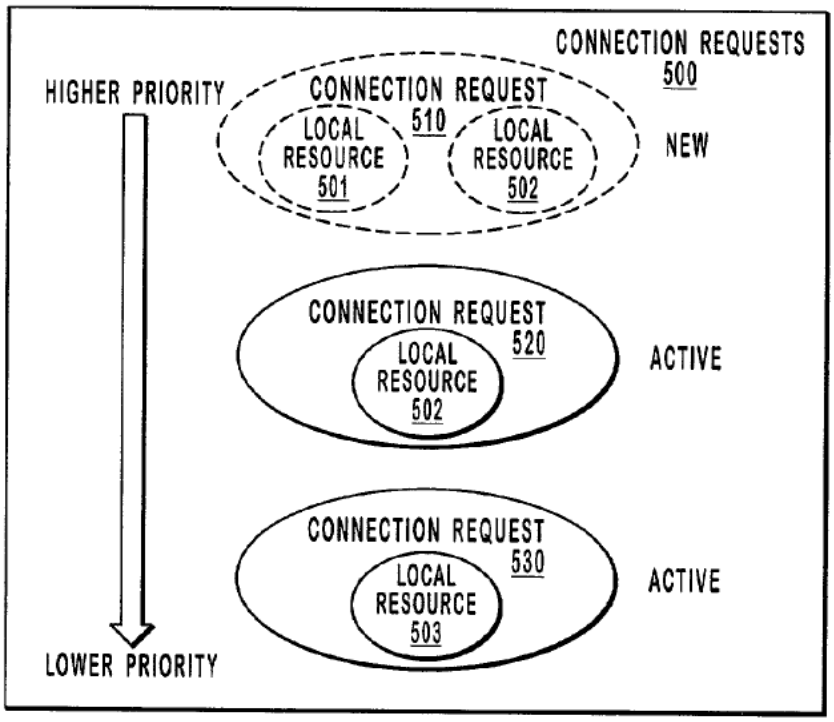

FIG. 5A

SAMSUNG-1005, FIG. 5A

In the example above, "connection requests 500 includ[e] new connection request 510 and active connection requests 520 and 530." SAMSUNG-1005, [0057]. "Connection requests 510, 520, and 530 are prioritized, with connection 510 having the highest priority and connection 530 having the lowest priority." *Id.* In this example, "requests from sync engine 202 may be assigned a higher priority than requests from messaging application 206[,]" though "[p]riorities may also be assigned to connection requests based on the current state of applications associated with the connection requests[,]" e.g., "a request from an application that is currently active may be assigned a higher priority than a request from an application running in the background." *Id.* Other examples of

prioritization are "based on characteristics associated with the connection requests[,]": e.g., "voice requests may be assigned a higher priority than data requests." *Id.*; SAMSUNG-1003, ¶49.

Shell further teaches embodiments in which "an application may notify connection [planner] 211 it wishes to 'piggy back' on other connection requests," i.e., "an application may request to only access resources in a destination network when another application is already accessing resources." SAMSUNG-1005, [0070]. In such embodiments, "[a]pplications that wish to piggyback, may call APIs associated with connection manager modules 210 and be given an open handle." *Id.* The open handle "facilitates notification back to the application that a connection on which the application may want to piggy back has been established." *Id.*; SAMSUNG-1003, ¶50.

(b) Cole

Cole describes "[a] method for configuring a mobile device including a plurality of communication interfaces." SAMSUNG-1006, Abstract, [0014]. A "connection manager 260" selects "communication interfaces" for connecting to remote networks (e.g., a wireless local area network (WLAN), a wireless wide area network (WWAN), and a wireless personal area network (WPAN)). SAMSUNG-1006, [0015], [0003], [0031], [0035], [0036], FIGS. 1, 2. The connection manager can also "schedule various events" using a "scheduler" (also annotated) to "effectively use available bandwidth." SAMSUNG-1006, [0074],

[0036], [0118], [0119]. This includes taking action when "monitored loads" exceed a "predetermined threshold." SAMSUNG-1006, [0075], [0077]; SAMSUNG-1003, ¶51.

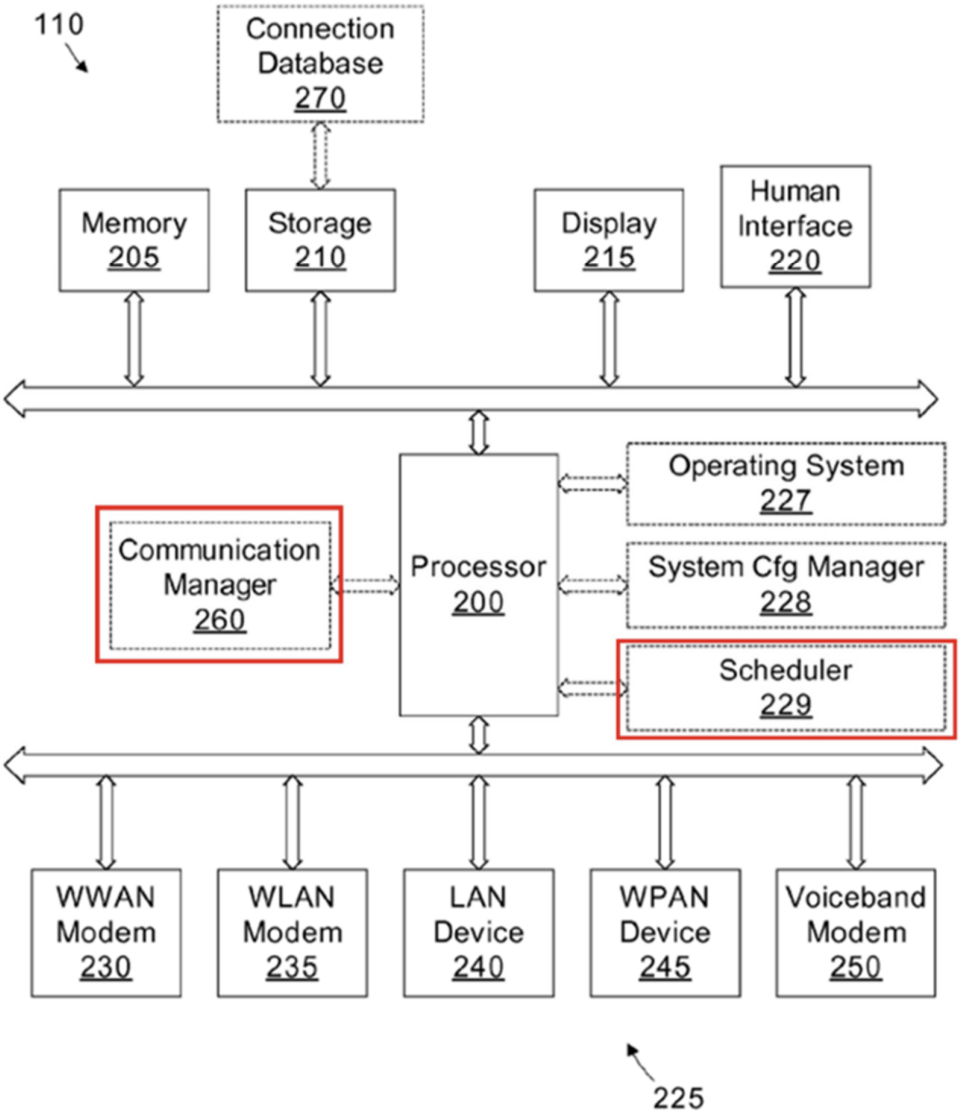

SAMSUNG-1006, FIG. 2 (annotated)

The connection manager manages communication interfaces to "determine which connections should be active at any given time." SAMSUNG-1006, [0036]. This determination includes monitoring various network connectivity

metrics, such as battery power. *Id.*, [0036], [0069], [0080]; SAMSUNG-1003, ¶52.

To assist in evaluating communication interfaces, the connection manager "maintains data related to each of the communication interfaces," including "connection name" and "connection technology type." SAMSUNG-1006, [0037]. This information may be "based on historical data[,] … user specified parameters, or static parameters," and may also be "monitored" by the connection manager. SAMSUNG-1006, [0038]; SAMSUNG-1003, ¶53.

When "the monitored load exceeds a predetermined threshold (e.g., 85% of capacity), the connection manager 260 may take one of several actions to manage the load." SAMSUNG-1006, [0075]. Applications can be "aborted," "postpone[d]," cancelled and rescheduled, and "block[ed]." *Id.*, [0080], [0085]-[0090], [0125]. These actions can also be taken in response to mobile device states, including a "power state." *Id.*, [0090]-[0098]. "By monitoring the load on an active connection, the connection manager 260 tries to proactively prevent increased latency from an overloaded connection from impacting the performance of the running applications or the efficiency of the user." *Id.*, [0075]; SAMSUNG-1003, ¶54.

(c) Combination

While Shell's prioritization techniques would have improved the efficient utilization of network resources, in mobile devices, power management is also critical, at least because applications cannot execute without sufficient power.

SAMSUNG-1003, ¶¶65-66. Network transmissions from a mobile device can cause high power utilization, especially using some types of power-intensive network connections (e.g., WWAN). SAMSUNG-1006, [0011]. Thus, when a high rate of network connection requests are provided by applications, power demand can increase, highlighting the importance of power management. SAMSUNG-1003, ¶66; SAMSUNG-1006, [0011], [0078].

By the Critical Date, one well-known technique for mobile device power management was selectively adjusting between available network connections (e.g., WWAN, WLAN). SAMSUNG-1003, ¶67 (citing SAMSUNG-1020). In addition to reducing power consumption, this technique could also increase available bandwidth, reducing network congestion. *Id.*; SAMSUNG-1006, [0078]. WLANs typically provide more bandwidth and involve greater cost relative to that involved with use of WWANs (and further involves less power usage). SAMSUNG-1003, ¶67. This would have motivated a person of ordinary skill in the art (POSITA)[2] to seek solutions beyond Shell. *Id*.

A POSITA would have looked to references directed to providing network connectivity for mobile devices to address related concerns, e.g., cost, power, network selection. SAMSUNG-1003, ¶68; SAMSUNG-1006, Abstract, [0014]-[0015]. Cole offers Internet access control techniques that address excess power consumption and selection of an appropriate network. SAMSUNG-

[2] SAMSUNG-1003, ¶¶14-15 (defining "POSITA")

1006, [0078], [0083], [0088], [0098]. In various examples, Cole determines whether to apply an Internet access control (connecting using the "best" connection technique) based on a condition (power state change of the device and high load on current communication link from device usage). SAMSUNG-1006, [0083], [0098]. Integration of these techniques into Shell's device would have therefore promoted more efficient communications and network access connectivity. SAMSUNG-1003, ¶68.

In operation, the Shell-Cole device first evaluates network and power conditions using Cole's techniques to determine whether to apply an Internet access control to connect to the network with the "best" connection type, then evaluates further conditions (e.g., whether an application is running in the foreground or background, which application is running, etc.) using Shell's techniques to determine the priority of the packets traveling over the network selected by the Shell-Cole device using Cole's techniques. *Id.*; SAMSUNG-1005, [0092]; SAMSUNG-1006, [0011], [0078], [0083], [0088], [0098]; SAMSUNG-1003, ¶69.

A POSITA would have incorporated functionality of Cole's communication manager (communication manager 260) into Shell's connection manager modules (connection manager modules 210). SAMSUNG-1003, ¶70. The Shell-Cole device would have included a network interface containing WWAN Modem 230 (supporting 2G and 3G cellular technologies) and WLAN Modem 235 (supporting Wi-Fi) from Cole. *Id.*; SAMSUNG-1005, FIG 1; SAMSUNG-

1006, [0031]. Using such connections, the Shell-Cole device would establish and manage "various kinds of network connections." SAMSUNG-1005, [0032]. The Shell-Cole device would have further included elements customarily found in a mobile device, such as a processor (e.g., Shell's CPU 111, Cole's processor 200), non-transitory memory (e.g., Shell's memory 112, Cole's memory 205), and a display (e.g., Shell's display 105, Cole's display 215). SAMSUNG-1005, FIG. 1, [0038]-[0044]; SAMSUNG-1006, FIG. 2, [0034]. The processor of the Shell-Cole device would have been configured to perform the operations discussed in Ground 1A because it "may allow for complex and flexible general-purpose processing capabilities." SAMSUNG-1006, [0040]; SAMSUNG-1003, ¶¶71-72.

A POSITA would have expected success in incorporating power management functionality (as taught by Cole) into the connection manager modules taught by Shell. Such a combination would have required only routine programming knowledge well within the skill of a POSITA before the Critical Date. SAMSUNG-1003, ¶73. Indeed, the change would have amounted to nothing more than the use of a known technique to improve similar devices – in each instance a mobile device equipped with network interfaces – in a similar way and combining prior art elements according to known methods to yield the predictable results described above. *Id.*; *KSR v. Teleflex*, 550 U.S. 398, 417 (2007); SAMSUNG-1005, [0036], [0040]; SAMSUNG-1006, FIG. 2, [0034]-[0035]. A POSITA would have known that processors commonly run processes

such as those run by the software modules described in Shell and Cole. SAMSUNG-1003, ¶74. Therefore, the combination of the techniques of Cole into Shell in the Shell-Cole device would require only routine programming knowledge.

2. Analysis

[1.pre]

To the extent the preamble is limiting, Shell-Cole renders it obvious. SAMSUNG-1003, ¶¶75-76. Shell's Figure 1 depicts a telephonic device 100 (***wireless end-user device***):

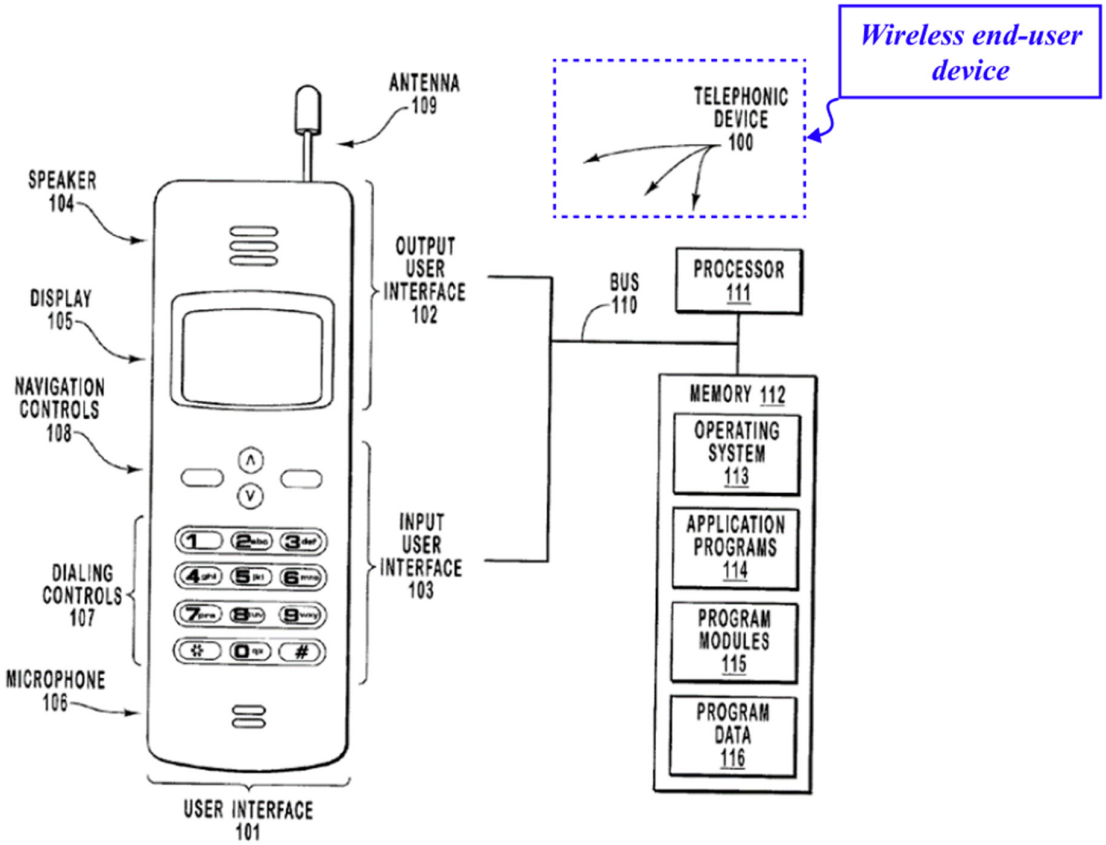

FIG. 1

SAMSUNG-1005, FIG. 1 (annotated)

The telephonic device 100 can be any device running a "suitable operating environment for the principles of the invention," including "a general-purpose computing device." SAMSUNG-1005, [0038]. Further, the telephonic device 100 may be implemented in "many types of computer system configurations," such "personal computers, hand-held devices, multi-processor systems, microprocessor-based or programmable consumer electronics, network PCs, minicomputers, mainframe computers, mobile telephones, PDAs, pagers, and the like." *Id.*, [0036]. The telephonic device 100 also has "an antenna 109 if the telephone device 100 has wireless capabilities." *Id.*, [0038]; SAMSUNG-1003, ¶76.

[1.1]

Shell-Cole renders [1.1] obvious based on disclosures in Shell and Cole regarding network connectivity. SAMSUNG-1005, [0055]; SAMSUNG-1006, [0031], [0035], [0088], FIG. 2. Specifically, "wireless carriers may define logic for accessing resources included in networks under their control[,]" suggesting connectivity of the telephonic device 100 with a cellular network (***wide area network***). SAMSUNG-1005, [0055]. Further, in Cole's Figure 2 (below), a mobile device includes a "WWAN modem 230" (***wireless wide area network (WWAN) modem***) providing connectivity to a "wireless wide area network (WWAN) 130," confirming that such a modem configuration was well-known by the Critical Date. SAMSUNG-1006, [0035]; SAMSUNG-1003, ¶77.

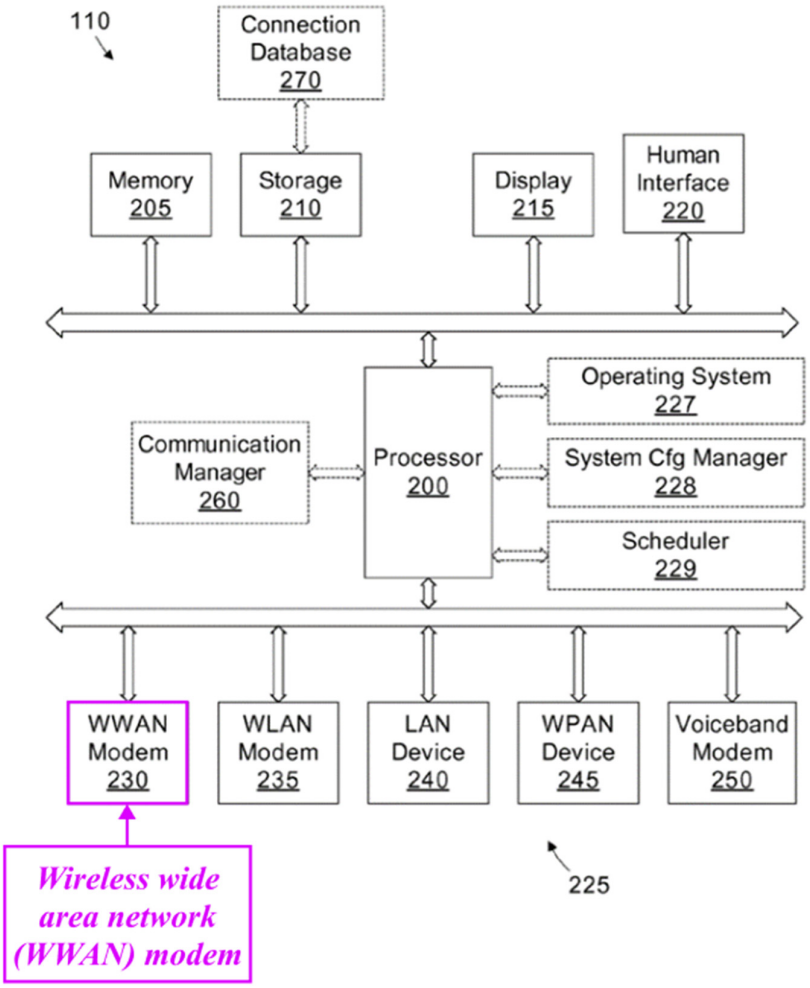

SAMSUNG-1006, FIG. 2 (annotated)

The "WWAN modem 230" can be a "3G channel" so that a mobile device can have network connectivity when in a "public place." SAMSUNG-1006, [0088]. Further, in Cole, a mobile device interfaces "with a plurality of communication networks 120, such as a wireless wide area network (WWAN) 130" (e.g., EVDO, HSDPA, 3G, GSM, CDMA, 2G, WiMAX, WiBro). *Id.*, [0031]. As explained in §III.A.1, this modem configuration described in Cole represents implementation detail for Shell's telephonic device 100. SAMSUNG-1003, ¶78; SAMSUNG-1018, [0095], [0125]. Thus, in Shell-Cole,

Shell's telephonic device incorporates Cole's WWAN modem 230 and thereby would have enabled data to be wirelessly transmitted over a WWAN network. *Id.*

Integration of "WWAN modem 230" from Cole into Shell's telephonic device 100 enables the Shell-Cole device to ***communicate data for Internet service activities between the device and at least one WWAN***. As described in Cole, WWAN modem 230 is designed to interface with various communication networks such as EVDO, HSDPA, 3G, GSM, CDMA, 2G, WiMAX, and Wi-Bro. SAMSUNG-1006, [0031]. These networks provide the infrastructure necessary for high-speed data transmission and continuous connectivity. SAMSUNG-1003, ¶79. When Shell's device is configured with this modem, the device gains the ability to connect to these wide area networks, allowing the Shell-Cole device to send and receive data packets required for Internet services like web browsing, email, and streaming. *Id.* This data communication is facilitated by the modem's capability to handle the necessary network protocols and manage the data flow between the device and the WWAN. *Id.*; SAMSUNG-1005, [0006]-[0008]; SAMSUNG-1006, [0088].

Moreover, Cole's network selection techniques further enhance the device's ability to maintain robust Internet connectivity. SAMSUNG-1006, [0006]. Specifically, WWAN modem 230 can automatically select and connect to the most appropriate WWAN based on availability and signal strength. *Id.*,

[0031]. Such dynamic network selection ensures that the device remains connected to a WWAN, thereby providing continuous Internet service. The modem can function as a "3G channel" and is capable of maintaining connectivity even in public places. *Id.*, [0088]. In Shell-Cole, this automatic selection and seamless switching between networks allows the device to consistently communicate data for Internet activities, ensuring that users can access online services reliably whenever the device is within the coverage of any supported WWAN. SAMSUNG-1003, ¶80. This capability, derived from Cole's detailed network interface descriptions, illustrates how the combined disclosures of Shell and Cole render the Shell-Cole device's data communication functionality over a WWAN both feasible and obvious. *Id.*

Further, accessing a network resource (as described in Shell) involves the transmission and reception of data over a network, which represents examples of an ***Internet service activity*** involving data exchange over the Internet. SAMSUNG-1003, ¶81. As Dr. Butler explains, "the mechanisms and protocols used for accessing general network resources directly support Internet service activities, making them analogous in their operational principles and requirements." *Id.*, ¶82 (citing SAMSUNG-1030).

[1.2]

Shell-Cole renders [1.2] obvious based on disclosures in Shell and Cole regarding network connectivity. SAMSUNG-1005, [0035]; SAMSUNG-1006, [0031], [0088], FIG. 2. In Cole's Figure 2 (below), a mobile device includes a

"WLAN modem 235" (***wireless local area network (WLAN) modem***) providing connectivity to a "wireless local area network (WLAN) 140," confirming that such a modem configuration was well-known by the Critical Date. SAMSUNG-1006, [0035]; SAMSUNG-1003, ¶83.

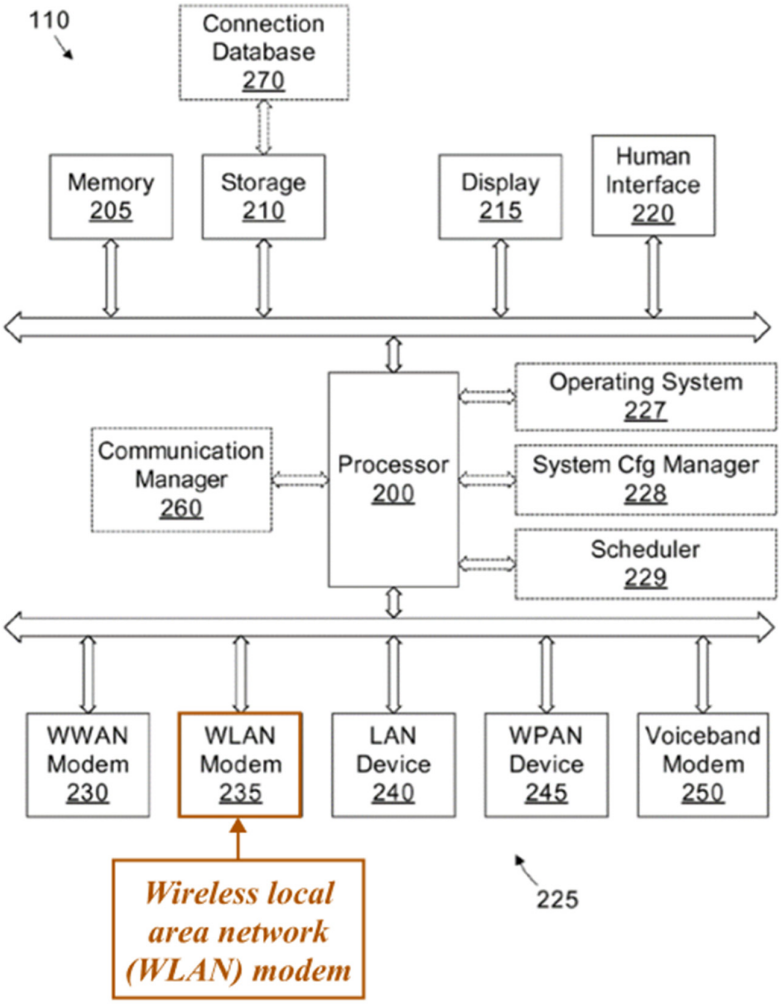

SAMSUNG-1006, FIG. 2 (annotated)

The "WLAN modem 235" can be a "Wi-Fi connection" so that a mobile device can have network connectivity "[w]hen the user returns home." SAMSUNG-1006, [0088]. Further, in Cole, a mobile device interfaces "with a plu-

rality of communication networks 120," including a "wireless local area network (WLAN) 140" (e.g., IEEE 802.11, Wi-Fi). *Id.*, [0031]. As explained in §III.A.1, this modem configuration represents implementation detail for Shell's telephonic device 100. SAMSUNG-1003, ¶84; SAMSUNG-1018, [0095], [0125]. Thus, in Shell-Cole, Shell's telephonic device incorporates Cole's WLAN modem 235 and thereby would have enabled data to be wirelessly transmitted over a WLAN network. *Id.*

Integration of "WLAN modem 235" from Cole into Shell's telephonic device 100 enables the Shell-Cole device to ***communicate data for Internet service activities between the device and at least WLAN***. In Cole, WLAN modem 235 is designed to interface with wireless local area networks, such as IEEE 802.11 and Wi-Fi. SAMSUNG-1006, [0031]. These networks provide the infrastructure necessary for high-speed data transmission and continuous connectivity while reducing network bandwidth costs. SAMSUNG-1003, ¶85. When Shell's device is configured with this modem, the device gains the ability to connect to these local area networks, allowing the Shell-Cole device to send and receive data packets required for Internet services like web browsing, email, and streaming, without requiring access to a wide area network. *Id.* This data communication is facilitated by the modem's capability to handle the necessary network protocols and manage the data flow between the device and the WLAN. *Id.*; SAMSUNG-1005, [0006]-[0008]; SAMSUNG-1006, [0088].

Moreover, as discussed for [1.pre], Cole's network selection techniques

further enhance the device's ability to maintain robust Internet connectivity. SAMSUNG-1006, [0006]. This ensures that the device remains connected to a WLAN, thereby providing continuous Internet service. The modem can provide connectivity to a "home wireless network" or a "office wireless network" and is capable of maintaining connectivity with lower bandwidth costs. *Id.*, [0038]. In Shell-Cole, this automatic selection and seamless switching between networks allows the device to consistently communicate data for Internet activities, ensuring that users can access online services reliably whenever the device is within the coverage of any supported WLAN. *Id.*, [0004]; SAMSUNG-1003, ¶86. This capability, derived from Cole's detailed network interface descriptions, illustrates how the combined disclosures of Shell and Cole render the Shell-Cole device's data communication functionality over a WLAN both feasible and obvious. *Id.* Further, as discussed for [1.pre], accessing a network resource involves the transmission and reception of data over a network, which represents examples of an ***Internet service activity*** involving data exchange over the Internet. SAMSUNG-1003, ¶86.

[1.3]

Shell-Cole discloses [1.3] based on the processing capabilities of a mobile device taught in Shell. SAMSUNG-1005, [0040], FIG. 1; SAMSUNG-1006, [0034]. In Shell, telephonic device 100 includes a processor 111 (***one or more processors***) with "complex and flexible general-purpose processing capa-

bilities." SAMSUNG-1005, [0040]; SAMSUNG-1003, ¶87. Cole likewise describes a mobile device 110 with a processor 200. SAMSUNG-1006, [0015], [0034], [0091]; *see* §III.A.1(c).

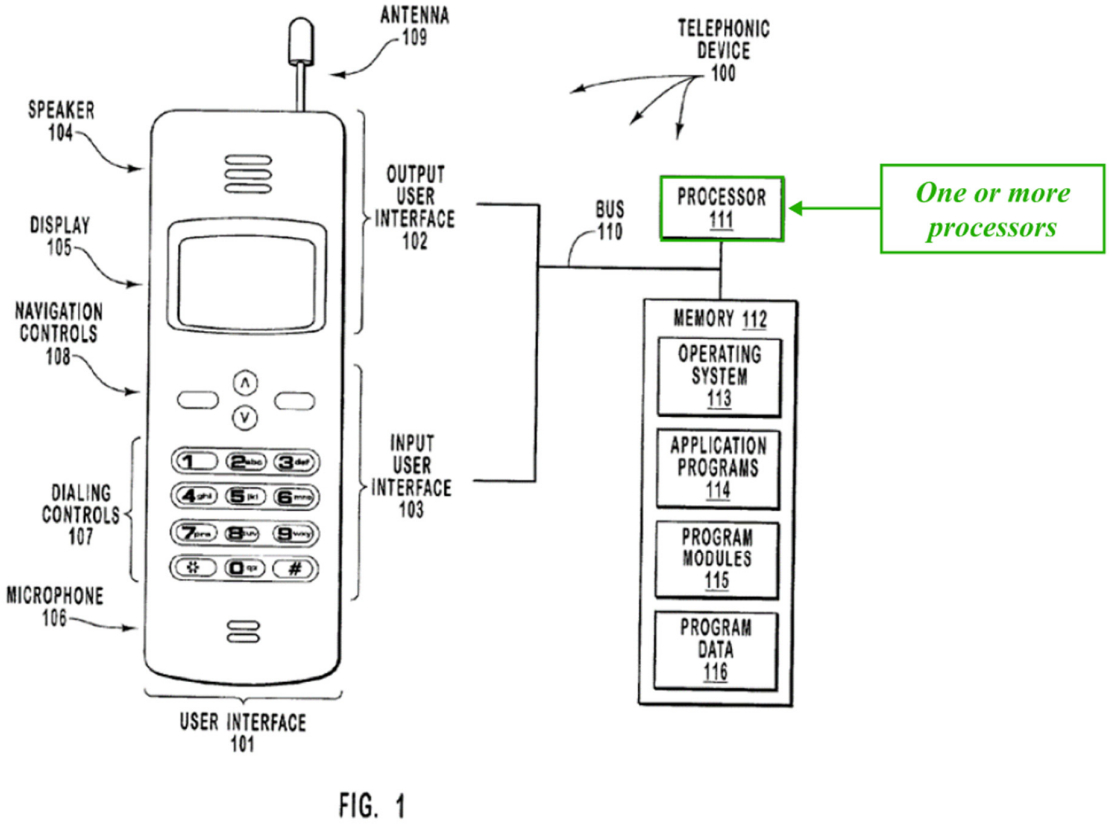

SAMSUNG-1005, FIG. 1 (annotated)

Shell-Cole also renders obvious application of a ***stored [] differential traffic control policy to Internet data service*** based on Shell's disclosures of "connection manager modules" regulating network access by applications on telephonic device 100. SAMSUNG-1005, [0013], [0017], [0032]; SAMSUNG-1006, [0009], [0080], [0085]; SAMSUNG-1003, ¶88. As discussed in §III.A.1(a), in Shell, the "connection manager modules" are configured to regulate network access by applications, e.g., by prioritizing connection requests,

determining an appropriate method for establishing a network connection, granting a connection access request, etc. SAMSUNG-1005, [0013], [0017], [0032].

Specifically, a POSITA would have recognized that network connection request handling (***Internet data service***) is performed by Shell's "connection manager modules" and that functionality encompasses examples of applying a ***traffic control policy*** described in the '359 patent, such as "block/allow settings," "throttle settings," "adaptive throttle settings," and "QoS class settings." SAMSUNG-1001, 85:59-86:24; SAMSUNG-1003, ¶89. Further, as noted in the '359 patent, the "traffic control policy" can be used for "selecting the network from a list of available networks, blocking or reducing access until a connection is made to an alternative network, and/or modifying or replacing a network stack interface of the device to provide for intercept or discontinuance of network socket interface messages to applications or OS functions." *Id.*

Like these examples, Shell teaches "connection manager modules" (or a "connection planner") receiving a connection request provided by an application that "request[s] access to a remote resource located in a destination network." SAMSUNG-1005, [0033]. The connection manager modules then "analyze[] a variety of factors to determine the most appropriate connection method to connect to the destination network." *Id.* Further, "[w]hen the most appropriate connection method is known, a connection service provider associated with the

connection manager may cause a system level Application Programmer Interface ('API') to create a connection from a local computing device to the destination network." *Id.* By granting or refusing connection requests, the connection planner is configured to apply decision logic (***stored [] differential traffic control policy***) for network connection request handling (***Internet data service***) (e.g., "block/allow settings"). SAMSUNG-1001, 85:59-86:24; SAMSUNG-1003, ¶90.

Further, in Shell, "connection requests may be prioritized so that higher priority requests cause lower priority requests to release a connection method so it may be used by the higher priority request." SAMSUNG-1005, [0013]. The "[p]riorities may be assigned to connection requests based on applications associated with the connection requests." *Id.*, [0057]. This is shown in Figure 5A below:

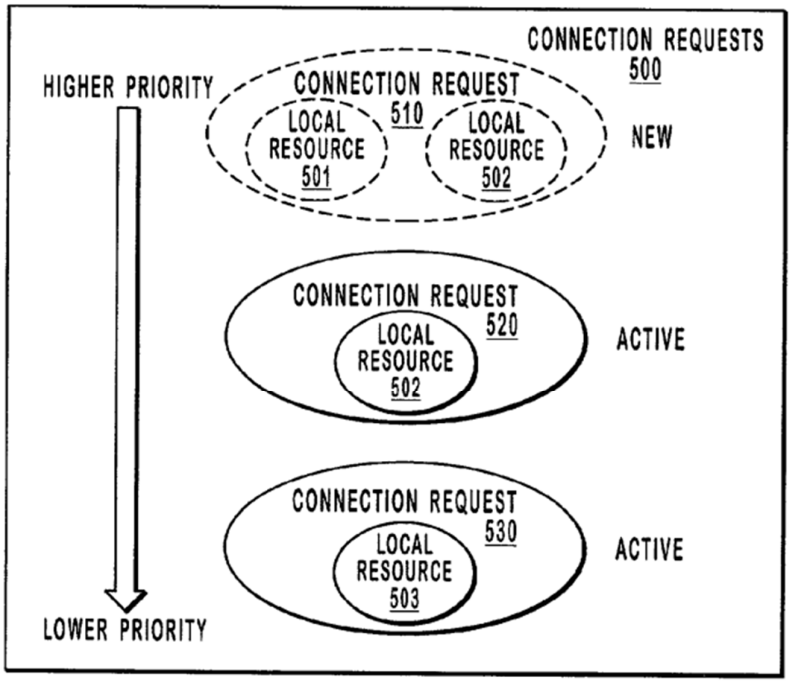

FIG. 5A

SAMSUNG-1005, FIG. 5A

As shown above, "[c]onnection requests 510, 520, and 530 are prioritized, with connection 510 having the highest priority and connection 530 having the lowest priority." *Id.,* [0057]. A POSITA would have recognized that Shell's prioritization techniques of network connection requests coincides with the '359 patent specification's disclosure of "blocking or reducing access until a connection is made to an alternative network" as an example of applying a "traffic control policy." SAMSUNG-1001, 85:59-86:24; SAMSUNG-1003, ¶91.

Further, a POSITA would have found it obvious that decision logic applied by the Shell-Cole device would have provided a ***WWAN differential traffic control policy*** based on disclosures in Shell and Cole regarding regulating

network access in relation to WWAN networks. Shell teaches multiple types of applications, e.g., data application(s), voice application(s), running on telephonic device 100 at the same time and submitting connection requests to an available network, such as a cellular network (e.g., WWAN) provided by a "wireless carrier." SAMSUNG-1005, [0055]. In this example, when a voice application submits a request to connect to the cellular network, the connection manager modules may prioritize the voice application over the data application. *Id*., [0013]. When this occurs, the data application module receives a notification that its "connection" is "being disconnected…." *Id.*, [0092]. Thus, decision logic applied in this example relates to access to a cellular network and thereby involves applying a ***WWAN differential traffic control policy***. SAMSUNG-1003, ¶92.

Further, Cole's "connection manager 260" may perform "communication load monitoring and deferred action functions," which are "useful in many situations." SAMSUNG-1006, [0088]. For example, if "the user is surfing a web site and selects a file for download[,]" "[t]he file [may be] larger than the user anticipated and is taking a long time to transfer." *Id.* In this example, "the lengthy transfer is conducted using the WWAN modem 230 (e.g., a 3G channel), which consumes significant battery power[,]" and thus, "[t]he connection manager 260 identifies the load on the WWAN modem 230 and asks the user to find a better connection." *Id*. As another example, where "a scheduled synchronization starts while the user is traveling[,]" the connection manager 260

may perform traffic monitoring to reduce "consum[ing] battery power." SAMSUNG-1006, [0089]. The connection manager 260 "notices the load from the synchronization operation and asks the user if it should be deferred (i.e., no better connection is available)." *Id.*; SAMSUNG-1003, ¶93.

[1.4]

Shell-Cole renders [1.4] obvious through Shell's disclosures of network access handling through improved connection manager modules. SAMSUNG-1005, [0013], [0048], [0055], [0092]. As explained below, the improved connection manager modules provide notification data (***indicates***) to an application module (***particular application***) representing decision logic regarding a network connection request (***one or more network access conditions***). Further, a POSITA would have known or found obvious that the Shell-Cole device implements the decision logic using one or more APIs (***application program interface (API)***) through the application of network connection handling (***applied [] differential traffic control policy***). SAMSUNG-1003, ¶94.

As discussed for [1.3], Shell-Cole includes Cole's WWAN modem 230, which would have made it obvious that decision logic applied by the Shell-Cole device, in some circumstances, involves network connection handling relating to connection requests to access resources associated with a WWAN network (***<u>WWAN</u> differential traffic control policy***). SAMSUNG-1005, [0013], [0055], [0092]; SAMSUNG-1006, [0015], [0034], [0091]; SAMSUNG-1003, ¶95.

Specifically, in Shell, "application modules may be notified" of a decision regarding a network connection request, and the "connection manager" may also "provide connection specific parameters" to the application modules. SAMSUNG-1005, [0092]. Thus, a POSITA would have recognized that, in Shell-Cole, processor 111 of telephonic device 100 is configured to provide notification data (e.g., decision, connection-specific parameters) related to a network connection request (***indicate***) to an application module that provided the network connection request (***particular application***). SAMSUNG-1003, ¶96.

The notification data also includes decision logic for ***one or more network access conditions***. SAMSUNG-1005, [0092]. The notification data may relate to a decision regarding the network connection request, e.g., "a connection will be established," "a connection is currently active," "connection is being disconnected," "no connection is currently active," "a connection to a resource is blocked for some reason," or any other notification associated with the connection to resources" (each of which represents ***one or more network access conditions***). *Id*. As another example, the notification data may include "connection specific parameters," e.g., "bandwidth, latency, power consumption, cost, physical location, past connection success, or other parameters" (each of which similarly represents ***one or more network access conditions***). *Id.*; SAMSUNG-1003, ¶97.

Further, in Shell-Cole, the connection manager modules are associated with "APIs…[that] may be called…" SAMSUNG-1005, [0048]. Specifically,

the "connection manager operates between system level APIs and application programs, providing a level of abstraction." *Id.*, Abstract, [0009], [0022], [0045]-[0048], [0070]. Thus, in some implementations, functionality of the connection manager modules of Shell-Cole (e.g., providing notification data to application modules) may be implemented through use of well-known techniques for "providing a level of abstraction" between system-level APIs and applications. SAMSUNG-1005, [0048]; SAMSUNG-1003, ¶98. As one example, Irwin (SAMSUNG-1013), which was published before the Critical Date on 8/7/2008, describes a Widget Engine 11 (with a connection manager 16) running on a mobile device and configured to call APIs relating to connection requests. SAMSUNG-1003, ¶99 (citing SAMSUNG-1013, [0013], [0023], FIG. 2).

Further, as Dr. Butler explains, "mobile operating systems (e.g., Symbian OS) were known to include connection management services that used APIs to allow applications to access network connectivity information." SAMSUNG-1003, ¶100 (citing SAMSUNG-1014, 45-46). Indeed, "[a]nother example is SAMSUNG-1010 (Dive-Reclus), which…uses permissions regulating network access by a third-party application using an API call." *Id.* (citing SAMSUNG-1010, 16:23-30, 17:1-28). Thus, in Shell-Cole, the connection manager modules would have been configured to provide notification data to application modules through use of well-known APIs used to provide network-related information (***via an application program interface (API)***).

Further, use of an API to communicate with an application was a well-known technique prior to the '359 patent and would have been within a POSITA's general knowledge. SAMSUNG-1003, ¶101. Further, "the use of an API does not make the '359 patent's claims unique from prior art" because "a POSITA would have found it obvious to use an API to communicate Shell's network access conditions…to applications," especially when the application is in the background. *Id.*, ¶102.

[1.5]

As discussed for [1.4], notification data provided by the connection manager modules of Shell-Cole include decision logic representing ***one or more network access conditions*** (e.g., a decision regarding the network connection request). SAMSUNG-1005, [0048], [0070], [0092]; SAMSUNG-1003, ¶103.

Additionally, in Shell, an application may "wish[] to 'piggy back' on other connection requests[,]" i.e., "an application may request to only access resources in a destination network when another application is already accessing resources." SAMSUNG-1005, [0070]. A "piggy back" connection request may be denied in some instances, e.g., due to limited network bandwidth. *Id.*, [0092]. In these instances, a first application (***the particular application***) sends a "piggy back" network connection request based on an established connection of a second application (***different application***). SAMSUNG-1003, ¶104.

In denying/blocking the "piggy back" network connection request, the

connection manager modules would provide notification data to the first application indicating decision information regarding the "piggy back" network connection request (***network access condition***). SAMSUNG-1003, ¶105. Further, the decision information would indicate that the "piggy back" network connection request is denied/blocked (***Internet data service*** being ***indicated as unavailable to the particular application***), but that network access by the first application is available (***Internet data service [] is currently available via the WWAN modem to a different application***). *Id.*

[4]

Shell-Cole would have incorporated the functionality to output a user interface relating to various aspects of policies used for prioritization ("user interface"). In Shell, "configuration user interfaces" (e.g., interface 201) may be used to "configure connection methods" and allow service personnel to "configure connection methods in a manner that is suitable to entities that have an interest in connection methods." SAMSUNG-1005, [0049]. A POSITA would have found it obvious to configure Shell-Cole to similarly provide a configuration user interface (***user interface***) to provide information regarding various aspects of connection request handling, including information regarding why decision logic is applied to application modules (***information regarding why the first differential traffic control policy is applied to the first end-user application***). SAMSUNG-1003, ¶106.

[9]

See [1.4] (addressing ***API***); SAMSUNG-1005, [0013], [0048], [0055], [0092]; SAMSUNG-1011, 149-50; SAMSUNG-1003, ¶¶107-08 (citing SAMSUNG-1013, [0013], [0023], FIG. 2).

In Shell-Cole, communication manager modules are integrated into a "protocol stack" that provides connectivity to different types of network connections. SAMSUNG-1005, [0048], [0061], [0083], [0091]. Further, "a protocol stack may include multiple interfaces to system level APIs 230[,]" and "[e]ach interface to system level APIs may be associated with a separate connection method[,]" which "lead[s] to an associated computing device including multiple network addresses." *Id.*, [0091]. This is shown below in Shell's Figure 2:

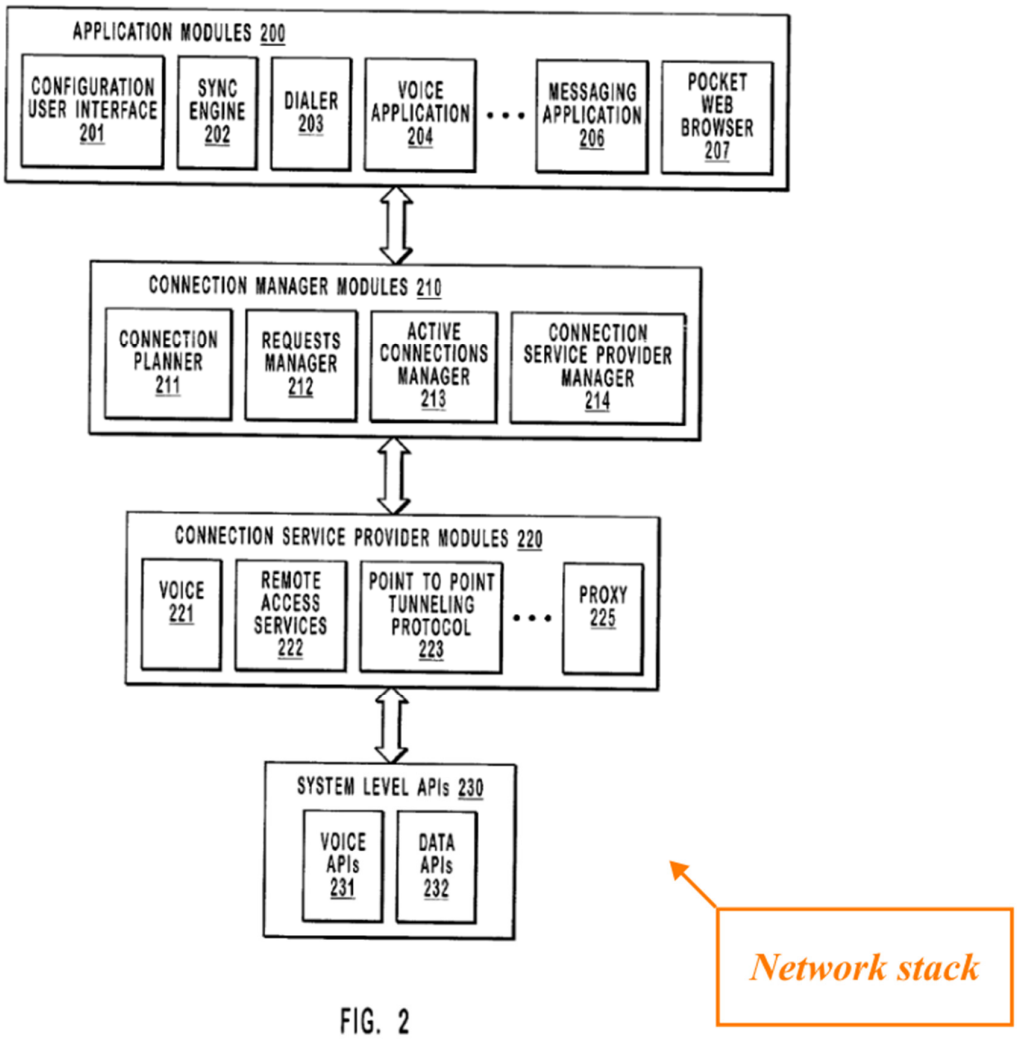

FIG. 2

SAMSUNG-1005, FIG. 2 (annotated)

As shown above, in Shell-Cole, connection manager modules are part of the protocol stack (***network stack***) and configured to interact with several APIs, including system level APIs associated with different network connections and APIs used to communicate network information to application modules (***interface integrated with the API***). This would have been obvious based on Shell's disclosure and the well-known nature of APIs and network stacks as common programming techniques that the '359 patent did not invent. SAMSUNG-1003,

¶109; SAMSUNG-1005, Abstract, [0048]; SAMSUNG-1013, [0013], [0023], FIG. 2; SAMSUNG-1014, 45-56; SAMSUNG-1010, 16:23-30, 17:1-28.

[10.1]

As described for [9], in Shell-Cole, connection manager modules are part of the protocol stack (***networking stack***). SAMSUNG-1005, Abstract, [0048], [0061], [0083], [0091]; SAMSUNG-1003, ¶110; SAMSUNG-1013, [0013], [0023], FIG. 2; SAMSUNG-1014, 45-56; SAMSUNG-1010, 16:23-30, 17:1-28.

[10.2]

See [10.1]. The protocol stack of Shell-Cole includes an ***application service interface layer*** because, as described in Shell, connection manager modules "operate[] between system level APIs and application programs, providing a level of abstraction." SAMSUNG-1005, Abstract; SAMSUNG-1003, ¶111. This is shown in Shell's Figure 2:

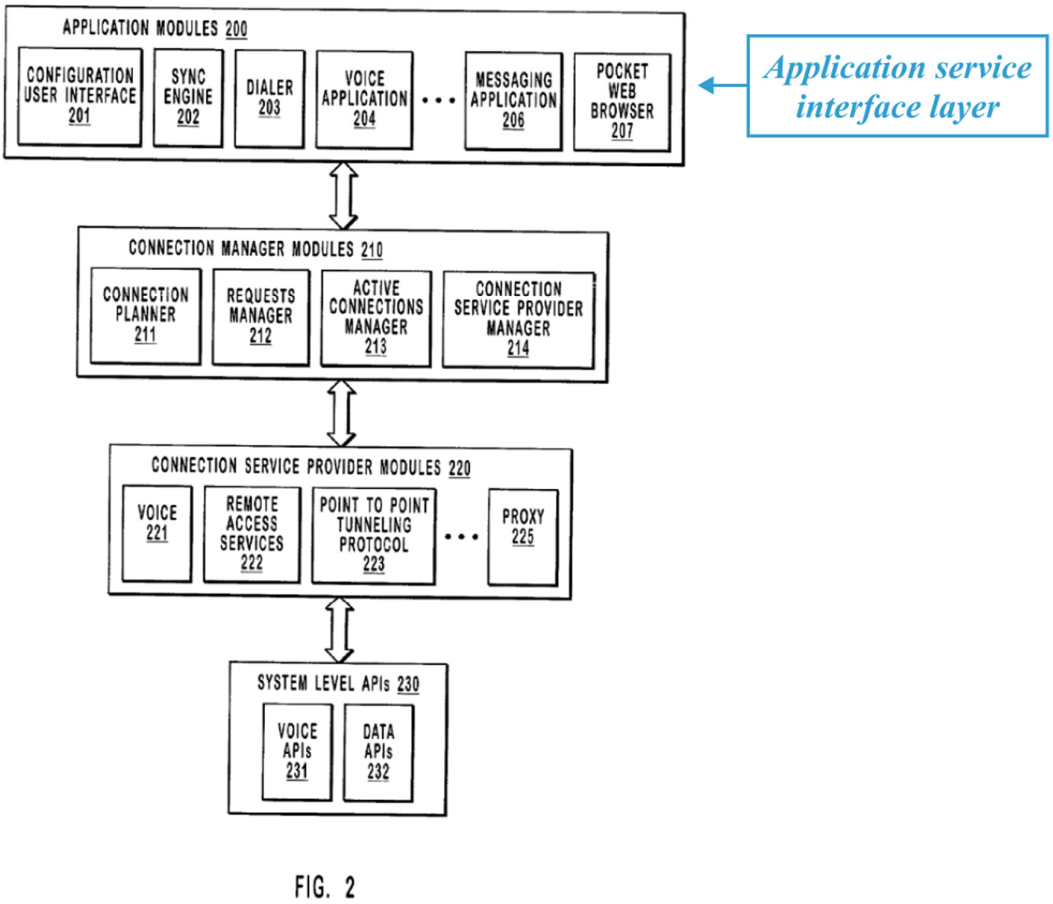

FIG. 2

SAMSUNG-1005, FIG. 2 (annotated)

As described in the '359 patent specification, examples of the "application service interface layer" include "QoS application service interface layer" and "network capacity controlled services interface layer." SAMSUNG-1001, 60:33-61:6. Further, the function of the "application service interface layer" is "to monitor and in some cases interpret and process the traffic between the applications and the standard networking stack API," e.g., by "identif[ying] application traffic flows before the application traffic flows are more difficult or practically impossible to identify farther down the stack." *Id.* Thus, the protocol stack of Shell-Cole similarly includes an ***application service interface layer***

since Shell teaches how connection manager modules may block a network connection request provided by an application module to a network stack, which involves intercepting the network connection request. SAMSUNG-1005, [0048], [0053], [0061], [0083], [0091], [0092]; SAMSUNG-1003, ¶112. This enables accurate categorization of traffic, which "becomes more challenging once the data is encrypted or mixed with other traffic." SAMSUNG-1003, ¶¶113-14 (citing SAMSUNG-1001, 60: 33-61:6).

Network connection request handling in Shell-Cole involves identifying data traffic generated by application modules because the connection manager modules "analyze[] a variety of actors to determine the most appropriate connection method [to allow an application module] to connect to a destination network." SAMSUNG-1005, [0033]. Further, a "priority of [a] request," as determined by the connection manager modules may be based on information associated with application traffic data, e.g., "latency, cost, and bandwidth." *Id.* Thus, it would have been obvious that the Shell-Cole device is configured to ***identify application traffic flows prior to flows entering the network stack*** through Shell's disclosure of using "connection parameters" to determine priority of network connection requests. SAMSUNG-1005, [0033], [0056]. Connection request prioritization also occurs at the "application layer," which sits at a general protocol stack architecture. SAMSUNG-1003, ¶115.

Further, as explained above, the protocol stack of Shell-Cole similarly in-

cludes functionality associated with the ***application service interface layer***, including intercepting a network connection request (e.g., by blocking the network connection request), which similarly would have involved ***identify[ing] application traffic flows*** (e.g., in assessing application traffic associated with the network connection request). SAMSUNG-1005, [0048], [0053], [0061], [0083], [0091], [0092]; SAMSUNG-1003, ¶116.

[11]

As discussed for [1.4], the connection manager of Shell-Cole would have leveraged several types of APIs (including the recited ***API***) in regulating network connectivity of applications. SAMSUNG-1005, [0013], [0048], [0055], [0092]; SAMSUNG-1011, 149-50. APIs leveraged by Shell-Cole's connection manager include a ***network access API*** because the connection manager modules provide functionality focused on controlling connections to the network, and thus, relate to network access by applications. *Id.*, [0022], [0033], [0045], [0046], [0048]; SAMSUNG-1003, ¶117. APIs leveraged by the connection manager are used to facilitate the management and control of network connections, thereby enabling or restricting access. SAMSUNG-1003, ¶118. Further, because they "interface with network protocols and services to handle connectivity" the APIs "serve the purpose of network access." *Id.* APIs related to providing network access information to applications were well-known before the Critical Date. SAMSUNG-1003, ¶119 (citing SAMSUNG-1014, 45-46, and SAMSUNG-1010, 16:23-17:28, 20:1-12); SAMSUNG-1001, 92:1-26.

[13]

As discussed for [1.4], the improved connection manager of Shell-Cole would have leveraged several types of APIs (including the recited ***API***) in regulating network connectivity of applications. SAMSUNG-1005, [0013], [0048], [0055], [0092]. APIs leveraged by Shell-Cole's improved connection manager includes those described in Shell, as well as conventional APIs known by the Critical Date, such as Java sockets APIs. SAMSUNG-1003, ¶120; SAMSUNG-1011, 149-50. When a network access condition is used to permit an application to access network resources, the Java sockets API provides an indication to the application of the network access condition (***API informs the particular application when it is allowed to access Internet data service…***). SAMSUNG-1003, ¶120 (citing SAMSUNG-1011). This aligns with Shell's disclosure of using APIs in network connection handling. SAMSUNG-1005, [0009], [0022], [0033], [0045]-[0048], [0070], [0083], [0090], [0091]. Further, in Shell, applications can be notified "that a connection will be established" or "that a connection is currently active," meaning that the application is notified when a connection is granted. *Id*, [0092]. As another example, Dive-Reclus (SAMSUNG-1010) teaches using permissions to regulate API calls (granting/blocking) made by applications in accessing a network. SAMSUNG-1010, 16:23-17:28, 20:1-12; SAMSUNG-1003, ¶¶121-22.

[14]

See [1.4] (addressing ***API***); SAMSUNG-1005, [0013], [0048], [0055],

[0092]; SAMSUNG-1011, 149-50. APIs leveraged by Shell-Cole's improved connection manager include those described in Shell, as well as conventional APIs known by the Critical Date, such as APIs used for providing network information to applications requesting access to network resources. SAMSUNG-1003, ¶123; SAMSUNG-1014, 45-46, SAMSUNG-1010, 16:23-30-17:1-28; SAMSUNG-1011, 149-50.

Further, when a network access condition is used to permit an application to access network resources, the Java sockets API provides instructions (e.g., opening connections, sending/receiving data, and closing connections) to the application relating to the network access condition, thereby controlling the application's access to network resources (***API informs the particular application of one or more network traffic controls that the application is expected to implement***). SAMSUNG-1003, ¶124.

In Shell-Cole, the connection manager modules provide "connection specific parameters," e.g., "bandwidth, latency, power consumption, cost, physical location, past connection success," in providing connection request handling. SAMSUNG-1005, [0092]. Parameters used by the connection manager modules are examples of ***one or more network traffic controls*** because they represent metrics used in controlling network traffic. SAMSUNG-1003, ¶125. These parameters "optimize and manage network resources effectively," e.g., by "prioritizing or restricting certain traffic types." *Id.* (citing SAMSUNG-1005, [0009], [0010], [0015], [0033]).

An application module with a lower priority may be denied access when providing a network connection request, which results in the application module being provided with information of one or more network traffic controls that the application is expected to implement. SAMSUNG-1005, [0092]. Dive-Reclus (SAMSUNG-1010) also teaches permission decisions regulating network access by third-party applications that use API calls. SAMSUNG-1010, 16:23-17:28, 20:1-12; SAMSUNG-1003, ¶126. A POSITA would have found obvious that a permission decision is an example of ***one or more network traffic controls*** that controls network access, which is communicated to the application through a corresponding API (***API informs the particular application of one or more network traffic controls***). SAMSUNG-1003, ¶127.

[18]

Shell explains that priorities may be "assigned to connection requests based on the current state of applications associated with the connection requests," e.g., "a request from an application that is currently active may be assigned a higher priority than a request from an application running in the background." SAMSUNG-1005, [0057]. Application usage on a device relates to device usage, and thus, Shell's prioritization based on usage of applications providing connection requests considers whether the applications are executed in the foreground (i.e., active) or in the background. SAMSUNG-1003, ¶128. Indeed, systems routinely monitor which applications were active or inactive. *Id.* (citing SAMSUNG-1016). Thus, the Shell-Cole device performs ongoing

monitoring of which applications are active, so it can ***dynamically change*** the application of network connection handling (***stored WWAN differential traffic control policy***) based on the state of applications running on the device (***device usage state***). SAMSUNG-1005, [0057].

Additionally, Shell discloses examples of ***device usage***, e.g., "activating a control in a user interface, for example, a button, a drop down list or other element…," which are monitored to initiate requests to access a remote resource. SAMSUNG-1005, [0051]. Monitored device usage is used to identify "the most appropriate connection method for connecting to the destination network (i.e. resource)," enabling the connection to be established "automatically, without requiring any user intervention at all." *Id.*, [0052]. This is yet another example of ***dynamically chang[ing]*** application of network connection handling (***application of the first differential traffic control policy***) based on monitoring device usage (***based on a device usage state***). SAMSUNG-1003, ¶129.

Additionally, "connection manager modules 210 may cause resources to be released from and allocated to connection methods[,]" and "[w]hen this occurs, connection manager modules 210 may notify application modules 200 of such changes." SAMSUNG-1005, [0092]. In this example, where resource allocations for an application are "change[d]," this would have similarly resulted in ***dynamically chang[ing]*** application of network connection handling (***application of the first differential traffic control policy***) based on monitoring device usage (***based on a device usage state***). SAMSUNG-1003, ¶130. Indeed,

"application modules may be notified" of these changes. SAMSUNG-1005, [0092].

[19]

See [18]. The Shell-Cole device performs ongoing monitoring of which applications are active, so it can ***dynamically change*** the application of network connection handling (***stored WWAN differential traffic control policy***) based on a user's interaction with applications running on the device (***monitoring of user interaction with the device***). *Id.*, ¶131; SAMSUNG-1005, [0057]; SAMSUNG-1016. In Shell, ***user interactions with the device***, such as "activating a control in a user interface, for example, a button, a drop down list or other element…" are ***monitored*** in order to initiate requests to access a remote resource, where "the most appropriate connection method for connecting to the destination network (i.e. resource) may be identified" automatically, "without requiring any user intervention at all" (***dynamically change the application of the stored WWAN differential traffic control policy***). SAMSUNG-1005, [0051]-[0052].

[21]

As described in §III.A.1, a POSITA would have configured the Shell-Cole device to apply policies based on an application's present interaction state. Shell explains that priorities may be "assigned to connection requests based on the current state of applications associated with the connection requests," e.g., "a request from an application that is currently active may be assigned a higher

priority than a request from an application running in the background." SAMSUNG-1005, [0057]. A present interaction state of an application (foreground/background) represents an example of ***application behavior*** because an application's present interaction state indicates whether the application is currently made available for display on a mobile device. SAMSUNG-1003, ¶132.

This aligns with the '359 patent's disclosure of "application behavior," such as "conference meeting services, video streaming, content update, software update," and "running in the background and continuing to consume potentially." SAMSUNG-1001, 8:23-31; SAMSUNG-1003, ¶133. Further, the Shell-Cole device would have been configured to apply connection request handling (i.e., the policy) to perform application-related prioritization based on the application's present interaction state (***associate…based on an application behavior***).

[23.1]

As discussed for [9], the connection manager modules of Shell-Cole are part of the protocol stack (***network stack***) and configured to interact with several APIs, including system level APIs associated with different network connections and APIs used to communicate network information to application modules. SAMSUNG-1003, ¶134; SAMSUNG-1005, Abstract, [0048]; SAMSUNG-1013, [0013], [0023], FIG. 2; SAMSUNG-1014, 45-56; SAMSUNG-1010, 16:23-30, 17:1-28.

The connection manager modules of Shell Cole are also configured to ***intercept network socket interface messages***. SAMSUNG-1005, Abstract, [0048]; SAMSUNG-1013, [0013], [0023], FIG. 2. The protocol stack of Shell-Cole would have been configured to interact with several APIs, including system level APIs associated with different network connections and APIs used to communicate network information to application modules, or at least would have found such an implementation obvious based on Shell's disclosure and the well-known nature of APIs and network stacks as common programming techniques that the '359 patent did not invent. SAMSUNG-1003, ¶135. Indeed, "the modules handle network-related operations directly at the socket interface level," allowing effective monitoring and management of "data flow between applications and OS functions." *Id.*, ¶136.

[23.2]

See [23.1]. In Shell-Cole, processor 111 (***one or more processors***) would have been configured to perform processing associated with connection request handling functionality provided by the connection manager modules. SAMSUNG-1005, [0040]. As discussed for [1.4], the connection request handling functionality in Shell-Cole involves the application of network connection handling (***apply[ing] the differential traffic control policy***). SAMSUNG-1005, [0013], [0048], [0055], [0092]. As discussed for [23.1], this would have involved a protocol stack being configured to interact with several APIs, including system level APIs associated with different network connections and APIs

used to communicate network information to application modules, including effectively monitoring and managing data flow between applications and OS functions (***intercepted network socket interface messages***). SAMSUNG-1003, ¶137. This "ensur[es] that certain network traffic is prioritized or managed according to predefined rules and involves well-known network optimization techniques. *Id.*, ¶138 (citing SAMSUNG-1018).

[26]

In Shell, connection manager modules may assign priorities to network connection requests "based on the current state of applications associated with the connection requests." SAMSUNG-1005, [0057], [0092]. For example, "a request from an application that is currently active may be assigned a higher priority than a request from an application running in the background." *Id.* Further, "voice requests may be assigned a higher priority than data requests." *Id*. An application that provides a voice-related connection request (***different application***) involves a determination that a user is likely to interact with the application (e.g., voice call) (***user interaction with the different application***), and thus, prioritization by the connection manager modules involves ***determin[ing] that the different application is an active application***. SAMSUNG-1003, ¶¶139-40; SAMSUNG-1005, [0008], [0013], [0014].

[27]

As discussed in §III.A.1, Shell-Cole would have included connection manager modules (***agent***) for performing connection management handling.

SAMSUNG-1005, [0057], [0092]. A POSITA would have configured the Shell-Cole device such that the connection manager modules prevent an application module from consuming excessive network resources. SAMSUNG-1003, ¶141. In Shell, this is accomplished by providing notification data indicating that "a connection to a resource is blocked for some reason." SAMSUNG-1005, [0092]. Conditions associated with blocking may include "bandwidth, latency, power consumption, cost, physical location, past connection success, or other parameters…" *Id.* Such blocking would have precluded an application module from sending user interface messages associated with the application's connection request (***block, modify, remove, or replace…user interface messages***). SAMSUNG-1003, ¶141. The restriction denies system resources and "CPU activity" that would have been necessary for an application module to generate and output user interface messages. Techniques for blocking applications from presenting user interface messages were as well-known by the Critical Date, as shown by Dive-Reclus. *Id*. (citing SAMSUNG-1010, 19:17-25, FIG. 2).

[28]

In Shell, connection manager modules may provide notifications to application modules relating to changes in network connectivity, including a notification "that connection is being disconnected" or a notification "that a connection to a resource is blocked for some reason…" SAMSUNG-1005, [0092]; *see*

id., [0048], [0053], [0061], [0083], [0091], FIG. 2. Thus, the connection manager modules are configured to provide network connection request handling (***apply the stored WWAN differential traffic control policy***) by blocking a network connection request provided by an application module (***selectively block network access by the particular application***). *Id.*; SAMSUNG-1003, ¶¶142-43. The network connection request may be blocked based on one or more "connection specific parameters," such as "bandwidth, latency, power consumption, cost, physical location, past connection success…" *Id.*

Further, as discussed above, because the connection manager modules are within a protocol stack between application modules and system level APIs, blocking network connection requests involves intercepting network traffic of application modules (***intercepting open, connect, and/or write requests by the particular application to a network stack***). SAMSUNG-1005, [0048], [0053], [0061], [0083], [0091], FIG. 2; SAMSUNG-1003, ¶144. Indeed, This blocking would have involved "intercepting" because "the act of blocking involves the detection and examination of the request before it reaches its intended destination or the network stack." SAMSUNG-1003, ¶145 (citing SAMSUNG-1001, 60: 33-61:6).

B. GROUND 1B: Shell-Cole-Araujo Renders Claims 2, 16-18, 20, 27, and 29 Obvious

1. Shell-Cole-Araujo

(a) Araujo

Araujo describes "a power-management policy" for managing a "machine's power usage." SAMSUNG-1008, Abstract. The policy can be implemented on "[e]lectronic devices," such as "computers, wireless telephones, audio/video equipment, etc." *Id.*, [0014]. The policy is applied to "justify [a program] consuming power, depending on what the program is doing." *Id.*, [0004]. By implementing this policy, a device can better "use the energy in a way that strikes a balance between providing functionality and maintaining longevity of the charge." *Id.*, [0001]; SAMSUNG-1003, ¶55.

In Araujo, programs are classified using various criteria, and selectively provided resources based on their classifications. SAMSUNG-1008, [0027]. A program's ability to consume power is "based on a finding as to whether the program's status justifies the consumption of power under the circumstances that are present." *Id*. For example, a "very important person" (VIP) status allows a program to "consume power in situations where other programs would not be permitted to consume power." *Id.*; SAMSUNG-1003, ¶56.

Further, a device can provide resources to applications differently, based on whether the applications are "worthy" to consume power. SAMSUNG-1008, [0024]. A program can generate "a request to perform an action using a

particular device, such as "a request to send data over a wireless network." *Id.*, [0020], [0024]; SAMSUNG-1003, ¶57. The device can then perform various responsive operations, including allowing the request (SAMSUNG-1008, [0035]; FIG. 3, 302) and blocking the request (*id.*, [0035], [0050]; FIG. 4, 406).

The responsive operations are provided by a "request deflector component" that is "interposed" between a "program" and a "driver" of a "device," and configured to "intercept[] requests and respond[] to the requests based on power management considerations before the request reach[es] a device driver." SAMSUNG-1008, [0024], [0050]; SAMSUNG-1003, ¶58. Figure 6 (below) shows an example of the "request deflector component":

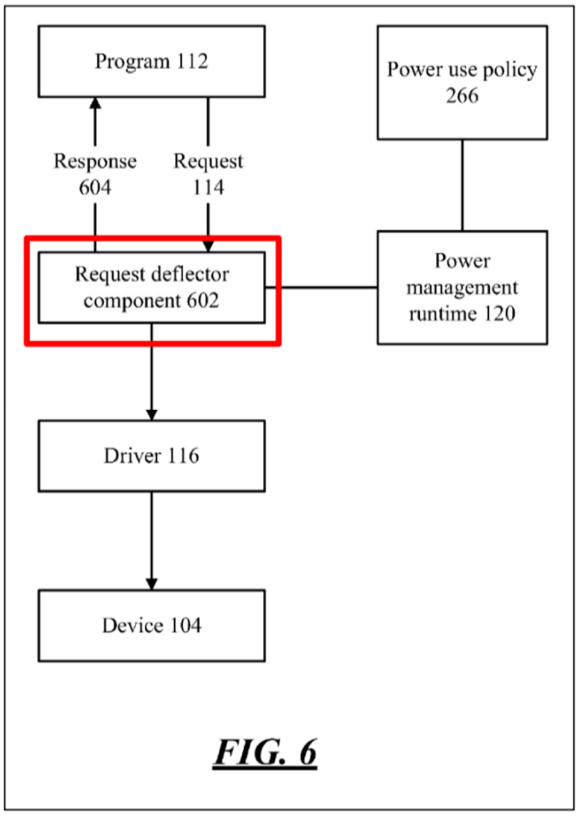

SAMSUNG-1008, FIG. 6 (annotated)

(b) Combination

In implementing Shell-Cole, a POSITA would have perceived opportunities for improving the prioritization capabilities described in Shell, e.g., by increasing energy efficiency. SAMSUNG-1003, ¶¶146-47. The POSITA would have also known that monitoring capabilities may be useful to reduce power consumption and thereby increase the longevity of techniques provided by Shell-Cole while operating on battery power. *Id*. One example is Araujo's "request deflector component," which is "interposed" between each application and network driver, to selectively allow or block an application from transmitting data to the network. SAMSUNG-1008, [0050]; SAMSUNG-1003, ¶147.

Incorporation of Araujo's "request deflector component" into Shell-Cole would have enabled assignment of a "status" to an application, use of that status to determine if allowing an application request "justifies the consumption of power under the circumstances that are present," and regulation (e.g., blocking, allowing) of the request based on that determination. SAMSUNG-1008, [0027]. This configuration would have provided better use of "energy in a way that strikes a balance between providing functionality and maintaining longevity of the charge." *Id.*, [0001]; SAMSUNG-1003, ¶148.

Specifically, a POSITA would have "interposed" Araujo's "request deflector component" between Shell's application modules and device drivers to

thereby process connection requests in relation to monitoring device power consumption. SAMSUNG-1005, FIG. 2; SAMSUNG-1003, ¶149. This configuration would have enabled further assessment of whether the application can access the network (e.g., in addition to considering whether an application has exceeded application-specific data limitations) in order to further enhance the efficiency of the Shell-Cole-Araujo device. SAMSUNG-1003, ¶149.

In the combination, the "request deflector component" also determines whether each of the applications has a "status [that] justifies the consumption of power under the circumstances that are present," and selectively allow or block the network packets from proceeding to the network driver based on the determination. SAMSUNG-1003, ¶150. Upon determining that the application's status justifies the consumption of power, the "request deflector component" allows the network packets to proceed to the network driver for prioritization. Alternatively, upon determining that the application's status does not justify the consumption of power, the "request deflector component" blocks the network packets from reaching the network driver, either permanently or temporarily. This would have provided an additional layer of control for regulating each of the applications' access to the network (e.g., to supplement the regulation techniques described in Shell and Cole). *Id*.

A POSITA would have had a reasonable expectation of success in modifying Shell-Cole to incorporate Araujo. SAMSUNG-1003, ¶151. The combination would involve using well-understood methods to integrate components

with predictable results. *Id.* Specifically, combining Shell's connection manager modules with Cole's network evaluation techniques and Araujo's request deflector component would follow known engineering practices, resulting in a cohesive system capable of efficiently managing network access and power consumption. *Id.* This approach aligns with established techniques for improving device efficiency and battery longevity, as Araujo's component is designed to selectively control network access based on application status and power conditions. Such integration would have enhanced similar devices by optimizing energy usage and network management in the same manner, thus providing a predictable and reliable improvement to Shell-Cole. *KSR*, 550 U.S. 398 at 415-421.

2. Analysis

[2]

A POSITA would have found obvious that, in incorporating Araujo's "request deflector component" into Shell-Cole (*see* §III.B.1), certain exemplary configurations involve the "request deflector component" being implemented to provide communications functionality as an API. SAMSUNG-1003, ¶152. Thus, the "request deflector component" renders the claimed ***API*** obvious since it would have provided the recited functionality (emulating network messaging) as being performed by the API. *Id*.

Indeed, APIs that were configured to emulate network messaging functionality between applications and drivers were well-known as of the Critical

Date. SAMSUNG-1003, ¶153 (citing SAMSUNG-1015, Abstract, FIG. 2, 3:465:10; SAMSUNG-1011, [0001], [0027], [0050]; SAMSUNG-1016, 1, 3). Moreover, the use of APIs to regulate network communications within a layered computing architecture was similarly well-known before the Critical Date. SAMSUNG-1003, ¶154 (citing SAMSUNG-1019, 11); SAMSUNG-1001, 91:25-67. Further, as discussed in §III.B.1, in Shell-Cole-Araujo, "if the power state change is not allowable under [a] policy," the device can "block the request" and "notif[y] [the program] that the request will not be processed." SAMSUNG-1008, [0038], [0041]. Further, "[t]he program may also be notified that the reason for the request is that the device is off[,]" e.g., "the program may receive an error code or result code indicating that the request calls for a device that is not turned on." *Id*. Thus, Shell-Cole-Araujo would have responded to an intercepted request by an application by notifying the application that the request will not be processed and/or transmitting an error code or result code to the application (***emulating network messaging***). SAMSUNG-1003, ¶155. In doing so, the combined device would have provided the application with a greater degree of information regarding its attempt to access a network, as taught by Araujo. *Id*.

Moreover, Araujo's use of an "error code or result code" is consistent with the '359 patent specification's disclosure of an "emulated network API" that blocks an application's connection attempt and sends "a message…back to the application" regarding the blocking, such as a message that "the application

will understand and can interpret to indicate that the network access attempt was not allowed/blocked, that the network is not available, and/or to try again later for the requested network access." SAMSUNG-1001, 91:25-67; SAMSUNG-1003, ¶156.

[16]

In Shell-Cole-Araujo, power management is based on monitoring power consumption (***power save state***). SAMSUNG-1008, Abstract, [0004]. Shell-Cole-Araujo would have enabled changes to the way applications operate based on monitoring a power state, which involves, in some instances, setting the device to reduce power consumption (***transition to power save state***). SAMSUNG-1008, [0031], [0046]; SAMSUNG-1003, ¶157. Further, given that the connection manager modules of Shell-Cole-Araujo are configured to implement decision logic relating to network connection request handling using one or more APIs, it would have been obvious that such functionality is instructed by an API used for providing network connectivity information to an application (***API***). SAMSUNG-1005, [0048]; SAMSUNG-1003, ¶157; SAMSUNG-1013, [0013], [0023], FIG. 2l; SAMSUNG-1014, 45-46l SAMSUNG-1010, 16:23-30, 17:1-28.

[17]

In Shell-Cole-Araujo, power management is based on monitoring power consumption (***power state***). SAMSUNG-1008, Abstract, [0004]. Shell-Cole-Araujo would have enabled changes to the way applications operate based on

monitoring a power state, which involves, in some instances, adjusting a policy enforcement by Shell-Cole-Araujo for prioritization (***dynamically change the application of the stored WWAN differential traffic control policy***). SAMSUNG-1008, [0031], [0046]; SAMSUNG-1003, ¶158. In response, the Shell-Cole-Araujo device would respond by "block[ing] the request" and the "program may receive an error code or result code." *Id.*, [0040]. One type of request is a network access request described in Shell, and that blockage of the request would have resulted in the Shell-Cole-Araujo device applying a different policy for prioritization (e.g., selecting a policy that prioritizes network access by another application that would not necessitate a power state change). SAMSUNG-1005, [0057], [0092].

In Cole, selection of a network is based on power consumption (e.g., "communication load monitoring"), and if connecting to a particular network "consumes significant battery power[,]" the connection manager 260 may "ask the user to find a better connection." SAMSUNG-1006, [0088]. Further, "[d]uring use, the mobile device 110 may be placed into a particular system configuration to emphasize particular performance characteristics," including "battery life." *Id.*, [0091]. In Araujo, "power manager 110 may cause devices to be turned off, or into a lower power state, based on factors such as timers, the amount of battery power remaining, or any other factor." SAMSUNG-1008, [0022]. Thus, in Shell-Cole-Araujo, the connection manager modules would

have similarly been configured to adapt connection request handling (***dynamically change the application of the stored WWAN differential traffic control policy***) to minimize power consumption by placing a mobile device into a power conservation state (***power state***). SAMSUNG-1003, ¶159.

[18]

Shell-Cole-Araujo incorporates the disclosures of Shell and Cole and thereby renders this claim obvious for the reasons discussed above in Ground 1A. SAMSUNG-1005, [0033], [0051], [0052], [0057]; SAMSUNG-1003, ¶160. Araujo further describes policy application based on "power usage" (***device usage state***). SAMSUNG-1008, Abstract, [0002], [0019], [0032]. Araujo describes predicting events relating to "a known pattern of usage," e.g., "a particular daemon with high (e.g., 'VIP') status known to use the network card every 30 seconds," which is then accounted for in "determining whether to change a given device's power state." *Id.*, [0033]. Thus, in this example, a change to network connection handling by Shell-Cole-Araujo (***dynamically change the application of the stored WWAN differential traffic control policy***) is based on a known pattern of usage associated with a power state (***device usage state***). SAMSUNG-1003, ¶160.

[20]

As discussed for [17], Shell-Cole-Araujo adjusts policy enforcement for network access in certain circumstances involving a power state change. In

Araujo, "power may be controlled for devices," such as "disks, **network adapters**, processors, monitors." SAMSUNG-1008, [0018]. A modem is an example network adapter, and thus, Shell-Cole-Araujo would have provided power management for ***one or more modems***. SAMSUNG-1003, ¶161. In some instances, Shell-Cole-Araujo adjusts policy enforcement for network access based on a power state change for a modem (***dynamically change the application of the stored WWAN differential traffic control policy***). SAMSUNG-1008, [0031], [0046]; SAMSUNG-1003, ¶161 (citing SAMSUNG-1006, [0088]-[0091]).

[27]

Shell-Cole-Araujo incorporates the disclosures of Shell and Cole and thereby renders this claim obvious for the reasons discussed above in Ground 1A. SAMSUNG-1005, [0057], [0092]; SAMSUNG-1010, 19:17-25, FIG. 2; SAMSUNG-1003, ¶162. In Araujo, a "request deflector component" (***agent***) may deflect (***block, modify, remove, or replace***) certain requests generated by application modules (including ***the particular application***) based on network connection request handling (***applied WWAN differential traffic control policy***). SAMSUNG-1008, [0024]; *id.*, [0001], [0050].

Further, requests provided by the application modules may relate to user interactions (***user interface messages***) such that the request deflector component may deflect requests related to such user interactions. SAMSUNG-1003, ¶163. In Shell, a "request to access a remote resource" may be provided based on a user "[a]ctivating a control in a user interface," e.g., "a button, a drop down

list or other element." SAMSUNG-1005, [0051]. In this example, a resulting request that is deflected by the request deflector component involves ***block[ing]…user interface messages***. SAMSUNG-1003, ¶163. Further, as discussed in Ground 1A, techniques for blocking applications from sending user interface messages were well-known by the Critical Date. *Id*. (citing SAMSUNG-1010, 19:17-25, FIG. 2).

[29]

As discussed for [21], a POSITA would have configured Shell-Cole-Araujo to respond to an intercepted request from an application by notifying the application that the request will not be processed and/or transmitting an error code or result code to the application (***emulating network messaging***). Further, as discussed in §III.2, Shell-Cole-Araujo would have incorporated Araujo's "request deflector component" to "intercept[] requests and respond[] to the requests based on power management considerations before the requests reach a device driver." SAMSUNG-1008, [0024], [0050]; SAMSUNG-1003, ¶164.

In Shell-Cole-Araujo, blocking a request from reaching the network driver results in the request being prevented from being provided to Shell's connection manager modules (included in the network stack) (***blocking the request***). SAMSUNG-1005, [0057], [0092]; SAMSUNG-1003, ¶165.

Further, "if the power state change is not allowable under the policy," the device can "block the request" and "notif[y] [the program] that the request will not be processed." SAMSUNG-1008, [0038], [0041]. Further, "[t]he program

may also be notified that the reason for the request is that the device is off[,]" e.g., "the program may receive an error code or result code indicating that the request calls for a device that is not turned on" (...***and returning…a message indicating the network request was not successful***). *Id.*, [0040]; SAMSUNG-1003, ¶166.

C. GROUND 1C: Shell-Cole-Freund Renders Claims 3-5 Obvious

1. Shell-Cole-Freund

(a) Freund

Freund relates to using "access rules" for efficient use of computing resources and controlling the use of networks. SAMSUNG-1012, 3:62-67. Access rules include various types of criteria, such as "total time a user can be connected to the Internet," "time a user can interactively use the Internet," among others. *Id.*, 4:8-19. To apply the rules, Freund classifies whether an application is interacting with the user in the device UI foreground. *Id.*, 10:16-20; *see id.*, 2:12-14; SAMSUNG-1003, ¶59.

To enable rule configuration, "a preferred user interface or 'wizard' dialogs for configuring rules," displays "rules governing operation of the Internet access monitor" and rules that "are available for a current configuration," and allows a user to create, edit, or delete rules. *Id.*, 24:16-24. Figure 7A (below) shows an example UI panel.

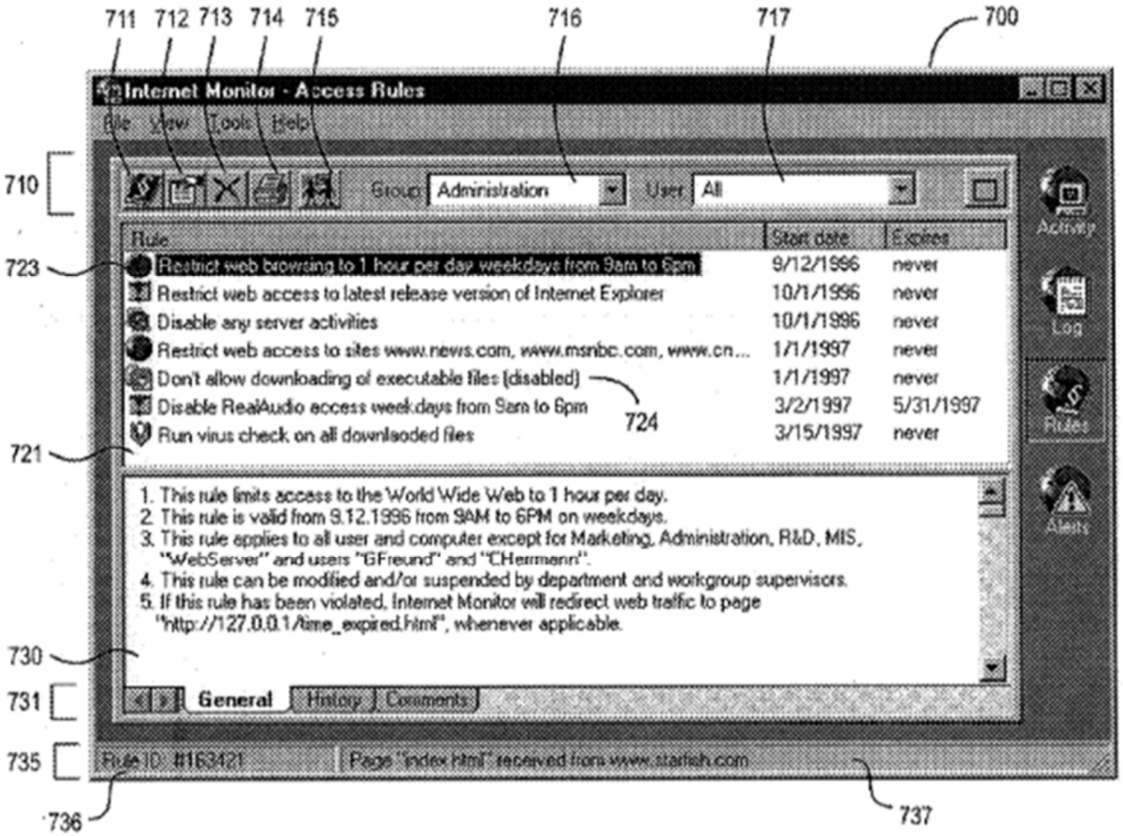

SAMSUNG-1012, FIG. 7A

Policies are loaded from a network element ("supervisor"), and "the Supervisor filters rules appropriate for the client ... and transmits them to the Client Monitor." SAMSUNG-1012, 28:14-18. The Client Monitor "saves a copy of the rules onto a local hard disk" where they are ready for use. SAMSUNG-1012, 28:18-19; SAMSUNG-1003, ¶60.

(b) Combination

As discussed above, Shell contemplates various types of prioritization techniques that "utilize a fairly complex heuristic to attempt to prioritize among multiple competing connection requests while balancing priority with performance and fairness among requests." SAMSUNG-1005, [0018]; *see id.*,

[0016], [0033], [0092]. Implementation details regarding these prioritization techniques are discussed in Freund. SAMSUNG-1012, 4:9-19. These policy examples are among the techniques for "comparing prioritized connection requests to local resources available in a local computing device," as described in Shell. SAMSUNG-1005, Abstract. Because both Shell and Freund teach using policies/rules to control network traffic, including defining and loading policies/rules, a POSITA would have found it obvious to combine their teachings to achieve the benefits described in Freund for configuring rules using user interface functionality suggested in Shell. SAMSUNG-1003, ¶167-71.

In operation, the Shell-Cole-Freund device would have used the policy-based network selection techniques of Cole to determine the best network connection and use the traffic management techniques of Shell and Freund to use that network efficiently. SAMSUNG-1006, [0062]; SAMSUNG-1005, [0057], [0092]; SAMSUNG-1009, 4:9-19. The policies governing device operation would be configured with the UI techniques of Freund and/or loaded from a network element using the techniques of Shell and Freund. SAMSUNG-1005, [0062]; SAMSUNG-1012, 24:22-24. The components of Shell-Cole-Freund each operate as they would in isolation. SAMSUNG-1003, ¶172.

A POSITA would have a reasonable expectation of success in implementing Shell-Cole-Freund, which would have required only routine programming knowledge well within the skill of a POSITA. *Id.* The change to Shell-Cole

would have amounted to nothing more than the use of a known technique to improve similar mobile devices in a similar way and combining prior art elements according to known methods to yield the predictable results described above. *Id.*; *KSR*, 550 U.S. at 417. The processor of the Shell-Cole-Freund device would have been configured to perform the operations discussed in this Ground. SAMSUNG-1003, ¶173.

2. Analysis

[3]

In Freund, "'background' use" is defined as "when an application accesses the Internet without user interaction." SAMSUNG-1012, 3:15-16; 10:14-24. Freund additionally contrasts active and background use, explaining that active use "occurs when a user directly interacts with an Internet application (e.g., Web browser) while that application accesses the Internet" while background use "occurs when an application or process executing in the background (i.e., does not have 'focus') accesses the Internet, such as a mail client which intermittently polls an Internet-based mail server." *Id.*, 10:14-24. Based on Freund, an application is classified as not interacting with a user (***not directly interacting***) when the application module uses background data services. SAMSUNG1003, ¶173. Thus, the application of policies by Shell-Cole-Freund incorporates Freund's description of background applications as those lacking direct user interaction. *Id.*

[4]

Freund's Figure 7A shows an example of a user interface to configure policy application. SAMSUNG-1005, [0014], [0038]-[0041], [0044], [0049]; SAMSUNG-1012, 24:16-20, 25:1-13, FIGS. 7A-K.

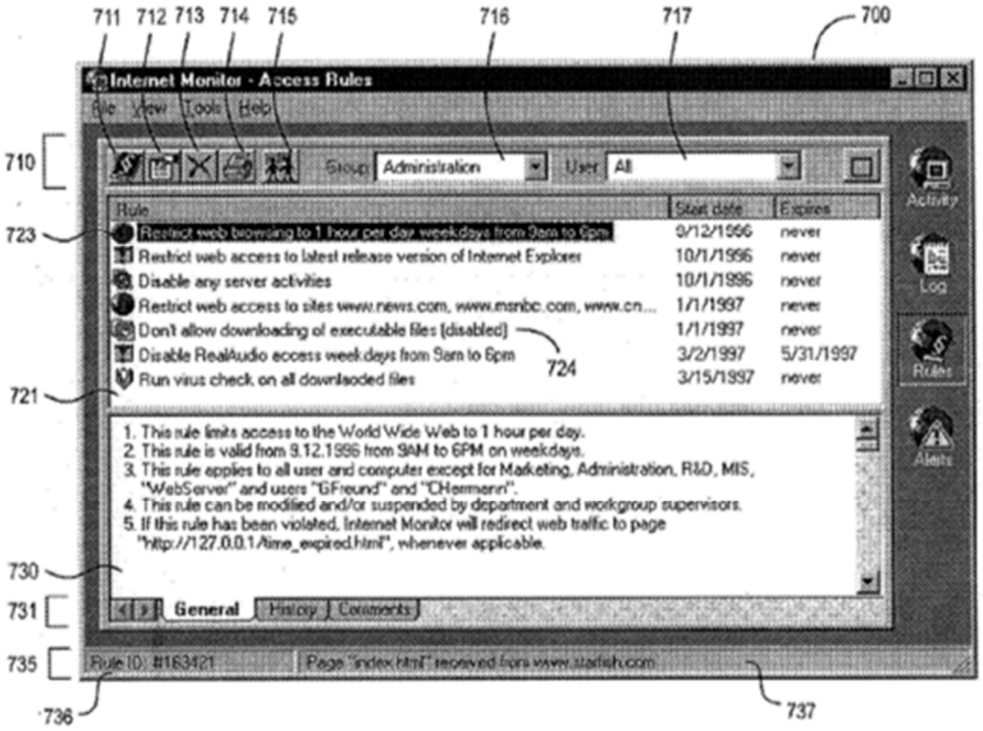

SAMSUNG-1012, FIG. 7A

As shown above, "a preferred user interface or 'wizard' dialogs for configuring rules," and "provides a 'view' of rules governing operation of the Internet access monitor, displaying all of the rules which are available for a current configuration." SAMSUNG-1012, 24:16-20. The policies (rules) can be associated with applications using the "wizard dialog 740 [that] asks the user what kind or type of new rule should be created." *Id.*, 25:1-3, FIGS. 7A-K. Further,

"any given rule is a combination of access rights granted on the basis of available applications, permitted time limits, permitted user activities, permitted protocols, and the like." *Id.*, 25:3-13. Additionally, a "rule details panel 730" "provides detail information for [a] particular rule which is currently selected in the panel 721." *Id.*, 24:45-63. The various types of information presented on the Freund interface (e.g., access rights as Internet activity access controls) (rule information, activity information associated with a rule) are examples of the recited ***information***. SAMSUNG-1003, ¶¶175-76.

[5]

As discussed for [4], Figure 7A depicts "a preferred user interface or 'wizard' dialogs for configuring rules," and "provides a 'view' of rules governing operation of the Internet access monitor, displaying all of the rules which are available for a current configuration." SAMSUNG-1012, 24:16-20, 25:1-13, FIGS. 7A-K; SAMSUNG-1005, [0014], [0038]-[0041], [0044], [0049]. A POSITA would have recognized this functionality informs the user of and allows a user to adjust various settings (***options to set, control, override, or modify service usage controls***) relating to access rights (***differential traffic control polic[ies]***). SAMSUNG-1003, ¶177.

D. GROUND 1D: Shell-Cole-Montemurro Renders Claims 6-8, 12, 15, 22, 24, And 25 Obvious

1. Shell-Cole-Montemurro

(a) Montemurro

Montemurro focuses on "policy-based routing of communications among

two or more modes of wireless communication." SAMSUNG-1009, [0001]. Devices with such connectivity capabilities are "dual or multi-mode devices," with "radio access technologies that provide access to multiple network types," including WLAN, WWAN. *Id.*, [0003]. But "[t]here are costs associated with application access from these different network[s,]" and thus, "[i]t is therefore desirable to have a mechanism that seeks to optimize communications." *Id.*, [0004]; SAMSUNG-1003, ¶61.

Montemurro uses policies to "configure connections and routes." SAMSUNG-1009, [0011]. A "rules engine" "evaluates [the] policies on a status change…to configure a routing table." *Id.* Together, the rules engine and the routing table "provides an appropriate connection to an application for its respective communications." *Id.* Figure 2 (below) shows "policy-based data routing for multi-mode operations." SAMSUNG-1009, [0024].

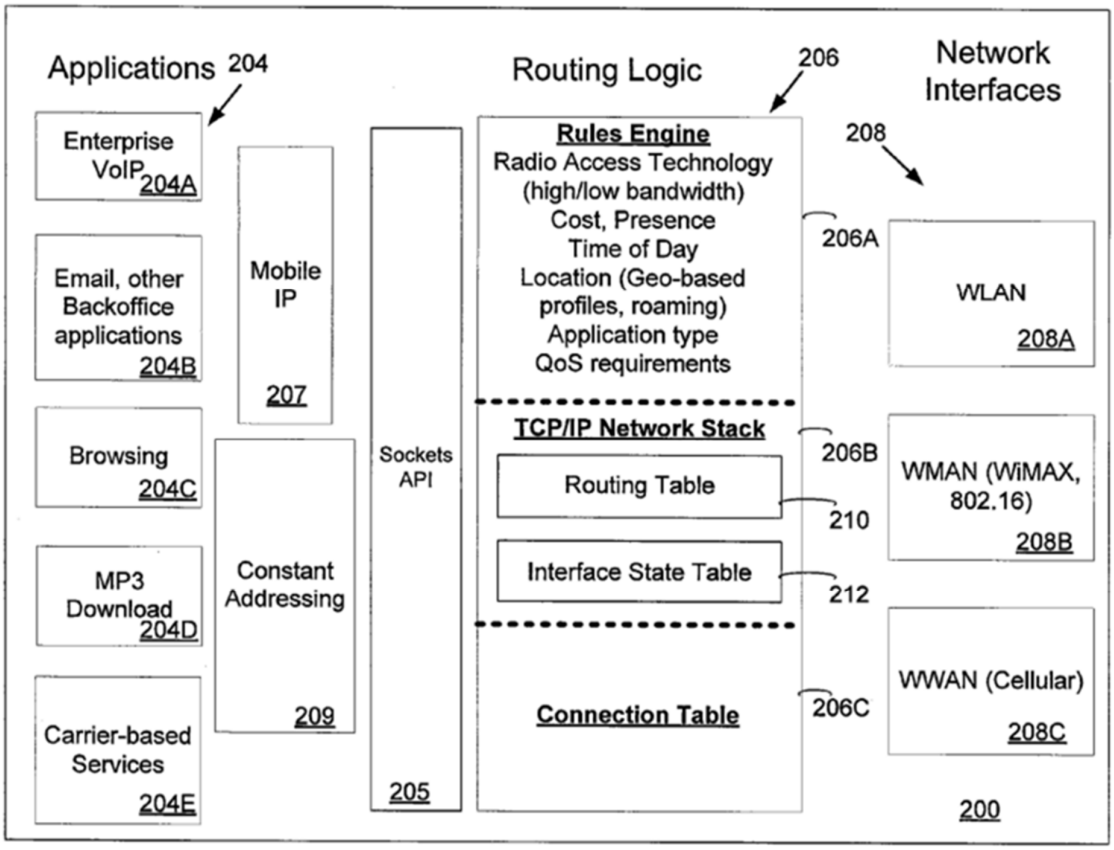

Figure 2

SAMSUNG-1009, FIG. 2

Device 102 includes "a plurality of applications 204, routing logic 206, and network interfaces 208." SAMSUNG-1009, [0025]. Routing logic 206 includes rules engine 206A as a "policy-based mechanism using rules to configure TCP/IP network stack 206B and connection table 206C to coordinate communications for applications 204 using communications interfaces [208]." *Id.*, [0027]; SAMSUNG-1003, ¶62.

Network interfaces 208 include interfaces for "WLAN 208A, WMAN 208B and WWAN 208C network communications," and optionally, "short-

range wireless interfaces" and "interface(s) for wired network communications." SAMSUNG-1009, [0028]. Rules engine 206A "configures the communication operations with a set of rules/policies" for various factors. *Id.*, [0029]. It also uses "connection table 207C and routing table 210 to optimize the flow of communications over multiple communications modes." *Id.*, [0033]. On a state change, e.g., connecting/disconnecting with a specific network, rules engine 206A executes and modifies "routing table 210 to ensure that data goes out to the most appropriate network (via respective network interface 208)." *Id.*, [0035]; SAMSUNG-1003, ¶¶63-64.

(b) Combination

A POSITA would have recognized opportunities to enable Shell-Cole to access multiple networks, motivating the POSITA to seek further solutions. SAMSUNG-1005, [0007], [0057], [0092]; SAMSUNG-1006, [0011]. A POSITA would have found these solutions in Montemurro, which describes use of policies to "disable or enable an application for a user" (SAMSUNG-1009, [0027]) and "policy-based data routing for multimode operations" (*id.*, [0024]). SAMSUNG-1003, ¶178.

Incorporation of Montemurro's teachings into Shell-Cole would have yielded several improvements, such as the ability to "offer different usage models depending on the mode of wireless operation selected." *Id.*, [0003]. It would have also enabled prioritization to further account for several considerations, such as "bandwidth, range, cost, and power consumption." *Id.* Further, policies

applied by Shell-Cole-Montemurro would also have been "responsive to various factors," as described in Montemurro. *Id.*, [0011]; SAMSUNG-1003, ¶179.

Finally, a POSITA would have had a reasonable expectation of success in implementing the resulting combination, as it would have involved using well-understood methods to integrate components with predictable results. SAMUNG-1003, ¶180. Combining Shell's connection manager modules with Cole's network evaluation techniques and Montemurro's network selection techniques would follow known engineering practices, resulting in a cohesive system capable of efficiently managing network access and power consumption for different network types. *Id.* This approach aligns with established techniques for improving network connection request handling for different network types, as Montemurro's policy-based routing techniques enable access to multiple network types. *Id.* Such integration would have enhanced similar devices by optimizing energy usage and network management in the same manner. *Id.*

2. Analysis

[6]

Shell-Cole-Montemurro would have applied a rules engine to coordinate connectivity for applications. SAMSUNG-1009, [0027]. As described in §III.C.1, in certain scenarios, a rules engine would have applied an instance of a routing table (***multimode profile***) with information for multiple networks available for selection. *Id.*, [0030]. For example, "if both the WLAN and WWAN radios…of [a] device [] are connected to their respective networks 104 and 106,

there will be a route associated with each network 104 and 106…" *Id.* The rules engine "executes" the instance of the routing table "to ensure that data goes out to the most appropriate network" and also to "determine which interface would be best used to service a particular application." *Id.*, [0035]; SAMSUNG-1003, ¶181.

Further, in scenarios where multiple networks are available for selection, the information specified by the instance of the routing table includes policies for each available network. SAMSUNG-1003, ¶182. In Montemurro, policies are "responsive to various factors such as Radio Access Technology, high/low bandwidth, cost, presence, time of day, location, application type and quality of service (QoS) requirements." SAMSUNG-1009, [0011], [0024], [0027], [0029]. Thus, an instance of the routing table with information for multiple networks available for selection includes "different policies for different networks." SAMSUNG-1009, [0011], [0024], [0027], [0029]. Moreover, the use of different policies for enabling capabilities for different networks (e.g., phone network, local network) was conventional by the Critical Date, as shown by Dive-Reclus. *Id.*, ¶183 (citing SAMSUNG-1010, 12:13-13:9).

[7]

See [6]. In some scenarios, information specified by an instance of the routing table (***multimode profile***) includes "different policies for different networks." SAMSUNG-1009, [0011], [0024], [0027], [0029]. The rules engine "executes" the instance of the routing table "to ensure that data goes out to the

most appropriate network" and also to "determine which interface would be best used to service a particular application." *Id.*, [0035]. For example, "if both the WLAN and WWAN radios…of [a] device [] are connected to their respective networks 104 and 106, there will be a route associated with each network 104 and 106…" *Id.*, [0030]. Thus, in this example, the rules engine within Shell-Cole-Montemurro would have executed the instance of the routing table based on types of current network connections of a device (WLAN, WWAN), and thus, when a routing option is selected from the routing table instance, the selection (***select a traffic control policy***) is based on the types of current network connections of the device (***type of network connection currently in use***). SAMSUNG-1003, ¶184. Permission decisions regulating network access by third-party applications that use API calls were well-known by the Critical Date. SAMSUNG-1010, 16:23-17:28, 20.

[8]

In Montemurro, "if both the WLAN and WWAN radios…of [a] device [] are connected to their respective networks 104 and 106, there will be a route associated with each network 104 and 106…" SAMSUNG-1009, [0030]. The rules engine within Shell-Cole-Montemurro would have executed the instance of the routing table (***select a traffic control policy***) when the device is connected to a WLAN connection (***when the type of network connection is at least one type of WLAN connection***). SAMSUNG-1003, ¶185.

Further, Montemurro references a "local LAN," which is a type of ***network connection from the WLAN to the Internet***. SAMSUNG-1003, ¶186; SAMSUNG-1009, [0039]. Shell-Cole-Montemurro enables connectivity to several types of network connections implemented by network components in the combination (e.g., base stations, WLAN components, access points, etc.) between the WLAN and Internet such that the device considers a ***type of WLAN connection*** in ***selecting a traffic control policy***. SAMSUNG-1003, ¶¶186-87 (citing SAMSUNG-1009, [0013]).

[12]

See [25.1], [25.2]. Montemurro identifies several types of WWAN, including "cellular technologies." SAMSUNG-1009, [0003]. Policies are "responsive to various factors" (*id.*, Abstract) including "network roaming" (*id.*, [0029]). Further, the rules engine "executes" the routing table to "ensure that data goes out to the most appropriate network (via respective network interface)" and "interacts with the connection API's to determine which interface would be best used to service a particular application." *Id.*, [0035]. Thus, an instance of the routing table includes "information on whether a connected WWAN is a roaming network or a non-roaming network." SAMSUNG-1003, ¶188; SAMSUNG-1009, [0022], [0029], [0037].

[15]

Shell-Cole-Montemurro incorporates an improved agent that would have

leveraged several types of well-known APIs (including the recited ***API***) in regulating applications. SAMSUNG-1005, [0048]; SAMSUNG-1003, ¶189; SAMSUNG-1011, 3-4; *see* [1.5] (Ground 1A). One well-known example is using permission decisions in regulating network access by third-party applications that use API calls. SAMSUNG-1010, 16:23-17:28, 20. It would have been obvious that a permission decision denying network access results in ***transition to a different state*** (e.g., permitted network access, restricted network access), which is communicated to the application through a corresponding API (***API instructs the first end-user application***). SAMSUNG-1010, 16:23-17:28, 20.

In Montemurro, "[s]ome access technology switches will result in IP address changes" so "an application using the connection needs to be aware of the IP address, the change may not be transparent and may need to be communicated to (or otherwise discoverable by) the application." SAMSUNG-1009, [0048]. Indeed, connection "differences are significant (e.g. between GSM/GPRS and WAN 802.11 technologies)" so "an application may need to tailor its behaviour to account for the new access technology in use" such as "[b]uffer sizes, re-transmission timers etc." that "may need to be changed." *Id.* Thus, scenarios where an application tailors its behavior (e.g., IP address changes, altered buffer sizes, and modified re-transmission timers) are examples of application transitions to different states. SAMSUNG-1003, ¶190.

Thus, in Shell-Cole-Montemurro, when an application state changes such that a network access condition adjusts the application's permission to access

network resources, an API instructs the application to transition states relating to the network access condition (***API instructs the first end-user particular application to transition to a different state***). SAMSUNG-1003, ¶191-92 (citing SAMSUNG-1011, 3-4); SAMSUNG-1001, 73:47-54.

[22]

In Shell-Cole-Montemurro, policies are "responsive to various factors," (SAMSUNG-1009, Abstract), including "cost, presence, time of day, location, e.g., geo-based policies, network roaming" (*id.*, [0029]). Further, the rules engine "executes" the instance of the routing table to "ensure that data goes out to the most appropriate network (via respective network interface)" and "interacts with the connection API's to determine which interface would be best used to service a particular application." *Id.*, [0035]. Thus, Shell-Cole-Montemurro regulates access to connection events to several networks, including a WWAN network (***WWAN network access events***). SAMSUNG-1003, ¶193.

Further, as discussed above for [1.5] and §III.A.1, Shell-Cole-Montemurro would have regulated network access by applications through use of policies. In Montemurro, "[p]olicies may be responsive to various factors," including "time of day." SAMSUNG-1009, Abstract. A policy applied by Shell-Cole-Montemurro regulates both the type of network access and the circumstances during which an application can have access to network services such that Shell-Cole-Montemurro "can only have WWAN network access during particular time windows" (e.g., time windows during which a policy specifies

network connectivity). SAMSUNG-1003, ¶194; SAMSUNG-1009, [0035]. Moreover, use of policies to limit network access during particular time windows were conventional by the Critical Date. SAMSUNG-1003, ¶¶194-96 (citing SAMSUNG-1012, 10:13-17, 30:59-67).

[24]

As discussed in §III.C.1, policies applied by Shell-Cole-Montemurro (including ***the first differential traffic control policy***) would have been "responsive to various factors," as described in Montemurro. SAMSUNG-1009, [0011]; SAMSUNG-1003, ¶197.

In Montemurro, "network infrastructure" provides support for services provided to a wireless device. SAMSUNG-1009, [0014]. Examples of "network infrastructure" include "a gateway server, a provisioning server, a discovery server, and an application repository," each of which are examples of a "network element." *Id.*; SAMSUNG-1003, ¶198. Services provided by the network infrastructure include "Administrative and Management Service dealing with policies, such as those specifying allowed applications for users, services available to applications and more." SAMSUNG-1009, [0015]-[0016].

Moreover, in Shell, "a variety of factors" are analyzed to "determine the most appropriate connection method to connect to the destination network," which would have adjusted network connection handling based on, for example, "the local resources currently available on the computing device, the priority of

the request, or connection parameters (such as latency, cost, and bandwidth) associated with a connection method." SAMSUNG-1005, [0033]; *id.*, [0092]. Where a server (***network element***) provides an update for a service dealing with policies, Shell-Cole-Montemurro updates policies relating to application operation (***update the first differential traffic control policy***) based on the update from the server (***information received from [the] network element***). SAMSUNG-1003, ¶199.

The update may specify a new allowed application, and Shell-Cole-Montemurro would have updated policies to reference a name of the new allowed application and thereby permit regulation of the newly allowed application. SAMSUNG-1003, ¶200; SAMSUNG-1009, [0014]. Moreover, techniques for adapting policy configurations based on information received from network elements were conventional by the Critical Date. SAMSUNG-1003, ¶¶200-201 (citing SAMSUNG-1012, Abstract, 5:9-12, 28:6-16).

[25.1]

In Shell-Cole-Montemurro, "if both the WLAN and WWAN radios…are connected to their respective networks 104 and 106, there will be a route associated with each network 104 and 106" (below). SAMSUNG-1009, [0030]; *id.*, [0011], [0024], [0027], [0029]; SAMSUNG-1003, ¶202.

Source IP	Destination IP	Device Interface (208)
192.168.1.20	0.0.0.0	WLAN (208A)
67.69.20.142	0.0.0.0	WWAN (208C)

In Montemurro, a device "has mobile IP capabilities" to "permit the device to attach to the Internet (IP network) via a home and one or more foreign networks." SAMSUNG-1009, [0037]. Montemurro contemplates devices with capabilities to connect to both home and foreign networks, and it would have been obvious that the routing table may be similarly configured to provide routing options for a ***home WWAN*** and a ***roaming WWAN***. SAMSUNG-1007, [0037]. As discussed for [25.2], connection factors represent examples of ***first and second differential traffic control policies***. SAMSUNG-1003, ¶203; SAMSUNG-1009, [0011].

Moreover, since Montemurro's device is operable on various networks (including WWAN), the routing table is similarly configured to provide routing options for WWAN for a home network (***home WWAN***) and WWAN for roaming to a foreign network (***roaming WWAN***). SAMSUNG-1003, ¶204; SAMSUNG-1009, [0030], [0037]. By the Critical Date, WWAN was well-known for being implemented for different settings, such as a home WWAN and a roaming WWAN. SAMSUNG-1003, ¶205. Montemurro confirms this through disclosure of WWANs, e.g., "cellular technologies," which includes roaming

networks and home networks. SAMSUNG-1009, [0029]-[0038]. Network selection in Shell-Cole-Montemurro to provide connectivity to one of several available WWAN networks (***connect to a home WWAN and a roaming WWAN***) represents an obvious configuration as it reduces costs and complexity, consistent with Montemurro. SAMSUNG-1003, ¶205. It was obvious to use and make selective connection to a home network (e.g., ***home WWAN***) and a roaming network (e.g., ***roaming WWAN***). SAMSUNG-1017, [0003].

[25.2]

In Montemurro, each policy specifies a set of connection factors. SAMSUNG-1009, [0011]. These connection factors represents a ***first differential traffic control policy*** in that they permit connectivity to an associated network, and thereby enable Montemurro's "policy-based mechanism to configure connections and routes." *Id.*, Abstract. Thus, in an instance of the routing table with routing options for a home network and a foreign network, the routing table includes a first set of connection factors for the home network (***first differential traffic control policy***) and a second set of connection factors for the foreign network (***second differential traffic control policy***). SAMSUNG-1009, [0011], [0024], [0027], [0029]; SAMSUNG-1003, ¶206. Hierarchical policy structures for adjusting the types of device functionality provided by Shell-Cole-Montemurro were also conventional by the Critical Date. SAMSUNG-1003, ¶206.

IV. DISCRETIONARY DENIAL

A. §314(a)

Petitioner's arguments are compelling with substantial supporting evidence, which "alone demonstrates that the PTAB should not discretionarily deny institution under *Fintiv*." SAMSUNG-1051, 4-5. Moreover, the *Fintiv* factors do not favor denial.

Factor 1 is neutral; neither party has requested a stay in co-pending litigation.

Factor 2 is neutral; the Court's trial date is speculative and subject to change. The Board will likely issue its Final Written Decision around March 2026, which is 5 months after the scheduled trial (10/6/2025). SAMSUNG-1053, 1. However, as the Board and Director have previously recognized, "scheduled trial dates are unreliable and often change." SAMSUNG-1051, 8.

Factor 3 favors institution; Petitioner filed this Petition months ahead of the one-year time bar, while litigation is still in its early stages. Beyond exchanging preliminary infringement/invalidity contentions, the parties and the District Court have yet to expend significant resources on invalidity.

Factor 4 also favors institution because Petitioner has provided a stipulation that it will not pursue the IPR grounds in the EDTX Litigation. SAMSUNG-1016. Thus, "[i]nstituting trial here serves overall system efficiency and integrity goals by not duplicating efforts and by resolving materially different patentability issues." IPR2020-00156, Paper 10, 19 (6/15/2020); *see* IPR2019,-

01393, Paper 24, 12 (6/16/2020).

Factor 5: The parties in the parallel litigation are the same.

Factor 6 favors institution; the merits of this Petition are compelling.

V. CONCLUSION

The Challenged Claims are unpatentable. Petitioner authorizes charge of fees to Deposit Account 06-1050.

VI. MANDATORY NOTICES UNDER 37 C.F.R. § 42.8(a)(1)

A. Real Party-In-Interest Under 37 C.F.R. § 42.8(b)(1)

Samsung Electronics Co., Ltd. and Samsung Electronics America, Inc. (collectively, "Samsung") are the real parties-in-interest.

B. Related Matters Under 37 C.F.R. § 42.8(b)(2)

The '359 patent is the subject of civil action *Headwater Research LLC v. Samsung Electronics Co., Ltd. et al.*, 2-23-cv-00641 (EDTX), filed December 29, 2023 (SAMSUNG-1004). Petitioner is not aware of any other disclaimers, reexamination certificates, or IPR petitions addressing the '359 patent.

C. Lead And Back-Up Counsel Under 37 C.F.R. § 42.8(b)(3)

Petitioner provides the following designation of counsel.

Lead Counsel	Backup counsel
W. Karl Renner, Reg. No. 41,265 Fish & Richardson P.C. 60 South Sixth Street, Suite 3200 Minneapolis, MN 55402 Tel: 202-783-5070 Fax: 877-769-7945 Email:IPR39843-0181IP1@fr.com	Jeremy J. Monaldo, Reg. No. 58,680 Jennifer J. Huang, Reg. No. 64,297 Ryan Chowdhury, Reg. No. 74,466 60 South Sixth Street, Suite 3200 Minneapolis, MN 55402 Tel: 202-783-5070 Fax: 877-769-7945 PTABInbound@fr.com

D. Service Information

Please address all correspondence and service to the address listed above. Petitioner consents to electronic service by email at IPR39843-0181IP1@fr.com (referencing No. 39843-0181IP1 and cc'ing PTABInbound@fr.com, axf-ptab@fr.com, jjm@fr.com, jjh@fr.com, and rxc@fr.com).

Respectfully submitted,

Dated September 6, 2024

/Jeremy J. Monaldo/

W. Karl Renner, Reg. No. 41,265
Jeremy J. Monaldo, Reg. No. 58,680
Jennifer J. Huang, Reg. No. 64,297
Ryan Chowdhury, Reg. No. 74,466
Fish & Richardson P.C.
60 South Sixth Street, Suite 3200
Minneapolis, MN 55402
T: 202-783-5070
F: 877-769-7945

(Control No: IPR2024-01407)

Attorneys for Petitioner

CERTIFICATION UNDER 37 CFR § 42.24

Under the provisions of 37 CFR § 42.24(d), the undersigned hereby certifies that the word count for the foregoing Petition for *Inter Partes* Review totals 13,987 words, which is less than the 14,000 allowed under 37 CFR § 42.24.

Dated September 6, 2024

/Jeremy J. Monaldo/

W. Karl Renner, Reg. No. 41,265
Jeremy J. Monaldo, Reg. No. 58,680
Jennifer J. Huang, Reg. No. 64,297
Ryan Chowdhury, Reg. No. 74,466
Fish & Richardson P.C.
60 South Sixth Street, Suite 3200
Minneapolis, MN 55402
T: 202-783-5070
F: 877-769-7945

Attorneys for Petitioner

CERTIFICATE OF SERVICE

Pursuant to 37 CFR §§ 42.6(e)(4)(i) *et seq.* and 42.105(b), the undersigned certifies that on September 6, 2024, a complete and entire copy of this Petition for *Inter Partes* Review and all supporting exhibits were provided by Federal Express, to the Patent Owner, by serving the correspondence address of record as follows:

Headwater Research LLC
C/O Farjami & Farjami LLP
26522 La Alameda Ave., Suite 360
Mission Viejo, CA 92691

/Diana Bradley/

Diana Bradley
Fish & Richardson P.C.
60 South Sixth Street, Suite 3200
Minneapolis, MN 55402
(858) 678-5667