US005963134A

United States Patent [19]

Bowers et al.

[11] **Patent Number: 5,963,134**

[45] **Date of Patent: Oct. 5, 1999**

[54] **INVENTORY SYSTEM USING ARTICLES WITH RFID TAGS**

[75] Inventors: **John H. Bowers**, Clarksburg, N.J.; **Thomas J. Clare**, Media, Pa.

[73] Assignee: **Checkpoint Systems, Inc.**, Thorofare, N.J.

[21] Appl. No.: **08/899,438**

[22] Filed: **Jul. 24, 1997**

[51] **Int. Cl.**[6] **G08B 13/14**

[52] **U.S. Cl.** **340/572.1**; 340/568.1; 340/568.8; 340/825.3; 340/825.31; 340/825.35; 340/825.54; 235/380; 235/381; 235/383; 235/385

[58] **Field of Search** 340/582, 568, 340/825.35, 825.54, 825.31, 825.3, 572.1, 568.1, 568.5, 568.8; 235/380, 381, 385, 383

[56] **References Cited**

U.S. PATENT DOCUMENTS

3,752,960	8/1973	Walton	340/825.3
3,816,708	6/1974	Walton	340/825.3
4,141,078	2/1979	Bridges, Jr. et al.	235/375
4,223,830	9/1980	Walton	235/380
4,580,041	4/1986	Walton	235/380
4,583,083	4/1986	Bogasky	340/572
4,656,463	4/1987	Anders et al.	340/572
4,688,026	8/1987	Scribner et al.	340/572
4,746,830	5/1988	Holland	310/313 D
4,827,395	5/1989	Anders et al.	364/138
4,837,568	6/1989	Snaper	340/825.54
4,857,893	8/1989	Carroll	340/572
4,862,160	8/1989	Ekcian et al.	340/825.54
4,881,061	11/1989	Chambers	340/568
4,924,210	5/1990	Matsui et al.	340/572
4,964,053	10/1990	Humble	705/416
5,019,815	5/1991	Lemelson et al.	340/933
5,036,308	7/1991	Fockens	340/572
5,059,951	10/1991	Kaltner	340/572
5,099,226	3/1992	Andrews	340/572
5,099,227	3/1992	Geiszler et al.	340/572
5,103,222	4/1992	Esch et al.	340/825.54
5,119,070	6/1992	Matsumoto et al.	340/572
5,151,684	9/1992	Johnsen .	
5,153,842	10/1992	Dluos, Sr. et al.	364/478.15
5,214,409	5/1993	Beigel	340/572
5,214,410	5/1993	Verster	340/572
5,218,343	6/1993	Stobbe et al.	340/572
5,260,690	11/1993	Mann et al.	340/572
5,288,980	2/1994	Patel et al.	235/381

(List continued on next page.)

FOREIGN PATENT DOCUMENTS

0 494 114	7/1992	European Pat. Off. .
0 585 132	3/1994	European Pat. Off. .
0 598 624	5/1994	European Pat. Off. .
0 615 285	9/1994	European Pat. Off. .

OTHER PUBLICATIONS

Bowers, J. "Road To Intelligent Tagging is Paved with Opportunities," *Automatic I.D. News*, Oct.

Primary Examiner—Benjamin C. Lee
Attorney, Agent, or Firm—Akin, Gump, Strauss, Hauer & Feld, L.L.P.

[57] **ABSTRACT**

An article inventory control system for articles, such as books, uses RFID tags attached to each article. Each tag has a unique identification or serial number for identifying the individual article. An inventory database tracks all of the tagged articles and maintains circulation status information for each article. Articles are checked out of the library using a patron self-checkout system. Checked out articles are returned to the library by being deposited into an exterior smart book drop which reads the RFID tag and automatically checks the article back in. Article data from the exterior smart book drop are used to generate reshelving reports for efficiently reshelve the articles. Articles which are used in the library, but not checked out, are returned to interior smart book drops within the library for reshelving. The interior smart book drops capture data regarding in-house use of articles. The data are used to generate historical usage reports. The uncirculated articles are stored on shelves of the library. The shelves are periodically scanned with an RFID scanner for updating inventory status.

22 Claims, 7 Drawing Sheets

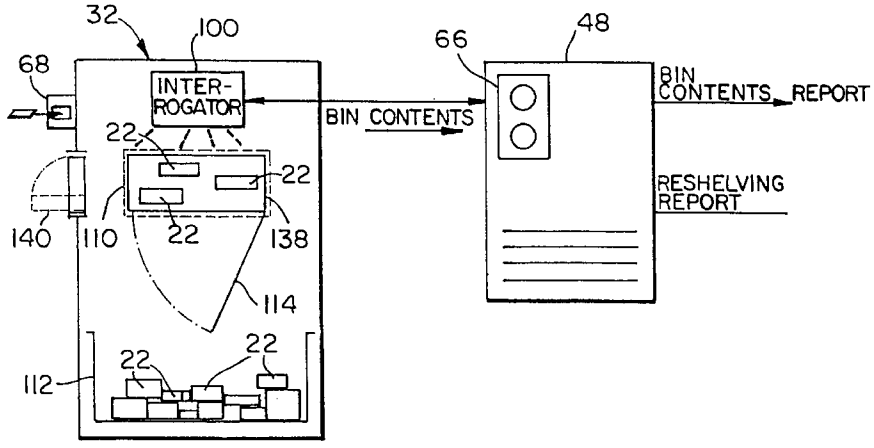

U.S. PATENT DOCUMENTS

5,339,074	8/1994	Shindley et al.	340/825.31
5,347,263	9/1994	Carroll et al.	340/572
5,353,011	10/1994	Wheeler et al.	340/572
5,430,441	7/1995	Bickley et al.	340/825.54
5,432,864	7/1995	Lu et al.	382/118
5,444,223	8/1995	Blama	235/435
5,446,447	8/1995	Carney et al.	340/572
5,448,110	9/1995	Tuttle et al.	257/723
5,450,070	9/1995	Massar et al.	340/825.35
5,450,492	9/1995	Hook et al.	380/28
5,469,363	11/1995	Saliga	364/478.13
5,471,203	11/1995	Sasaki et al.	340/825.31
5,490,079	2/1996	Sharpe et al.	705/418
5,497,140	3/1996	Tuttle	342/51
5,499,017	3/1996	Beigel	340/572
5,519,381	5/1996	Marsh et al.	340/572
5,539,394	7/1996	Cato et al.	340/825.54
5,541,585	7/1996	Duhame et al.	340/825.69
5,589,820	12/1996	Robinson et al.	340/572
5,602,538	2/1997	Orthmann et al.	340/825.54
5,604,486	2/1997	Lauro et al.	340/572
5,689,238	11/1997	Cannon, Jr. et al.	340/568
5,708,423	1/1998	Ghaffari et al.	340/825.35

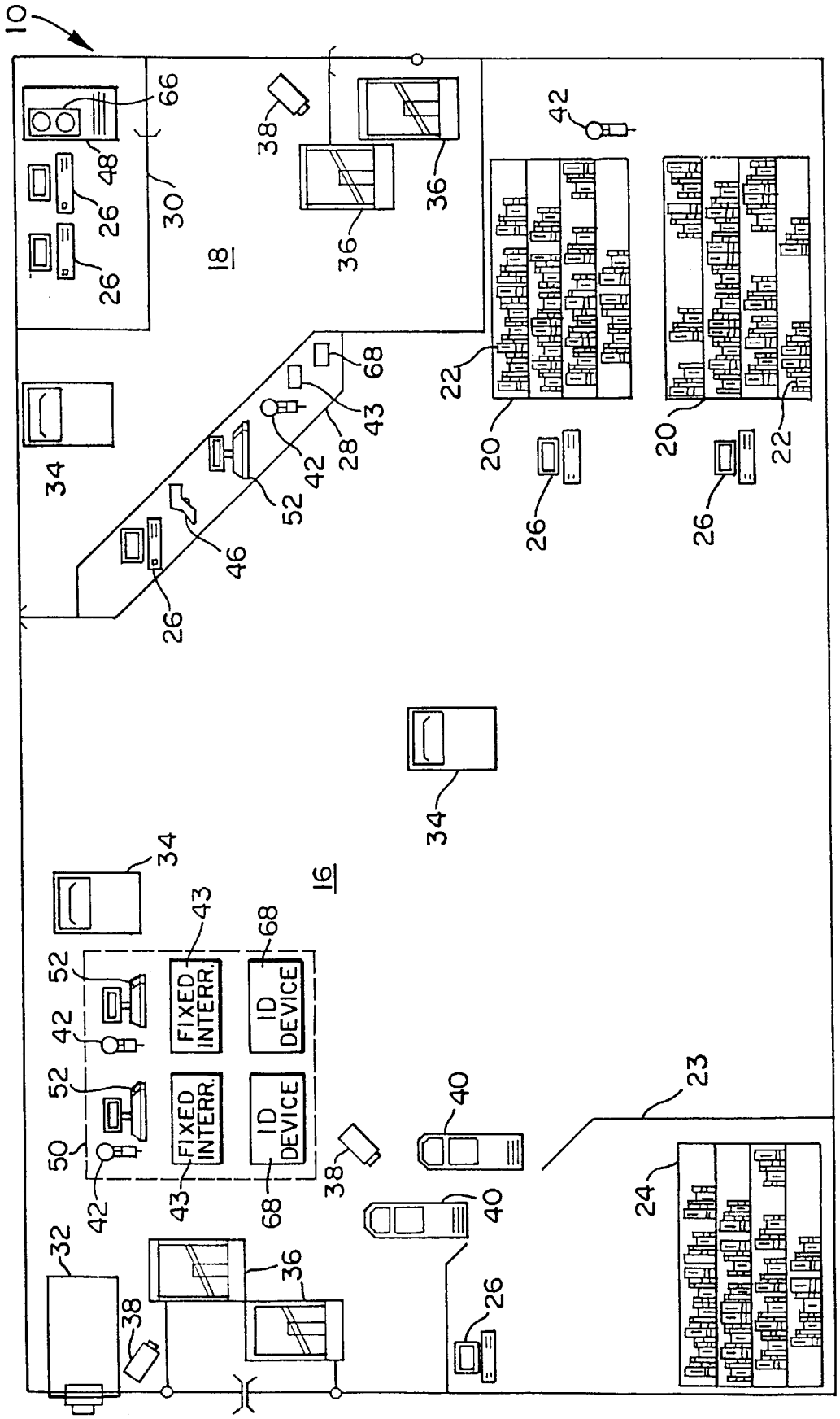

FIG. 1

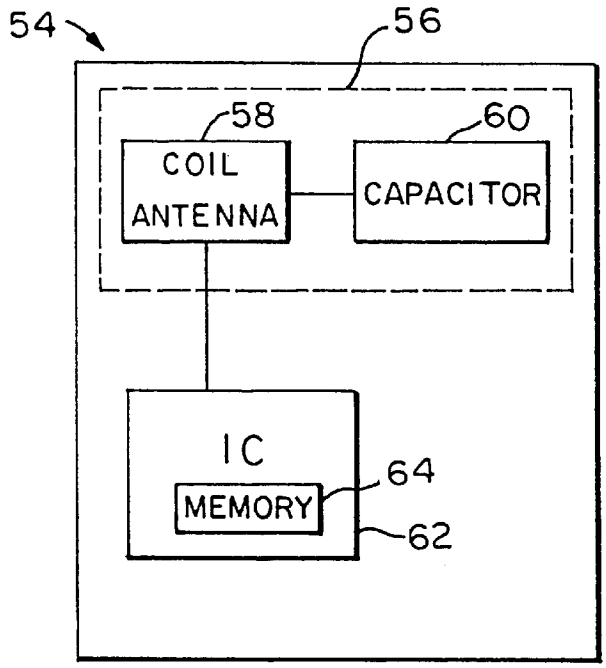
54
56
58
COIL
ANTENNA
60
CAPACITOR
IC
MEMORY
64
62

FIG. 2

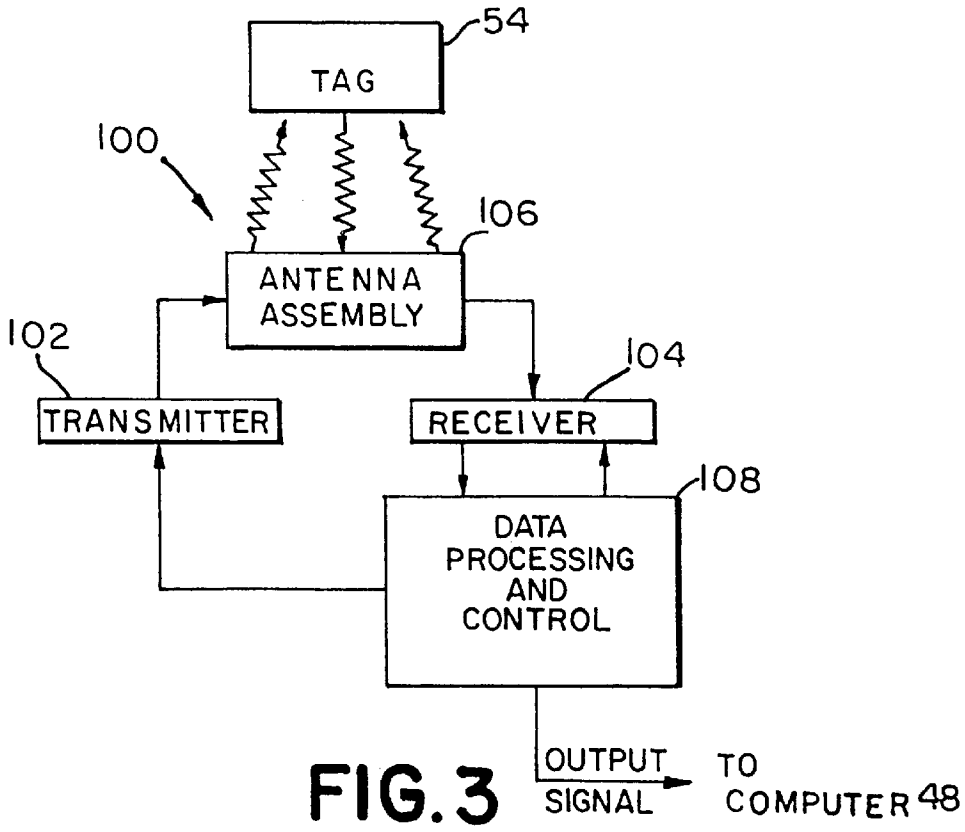
54
TAG
100
106
ANTENNA
ASSEMBLY
102
104
TRANSMITTER
RECEIVER
108
DATA
PROCESSING
AND
CONTROL
OUTPUT
SIGNAL
TO
COMPUTER 48

FIG. 3

DATABASE RECORDS

TAG IDENTIFICATION INFORMATION	ITEM IDENTIFICATION INFORMATION	LOCATION	CHECKOUT STATUS	PATRON ID
S/N 001	KA-452-1100 1	MAIN	IN	000000
S/N 002	KA-456-1122 1	MAIN	OUT	123456
S/N 003	KA-456-1122 2	ENGINEERING	OUT	234567
.				
.				
.				
S/N 100	QR-123-340 1	MAIN	IN	000001

FIG. 4

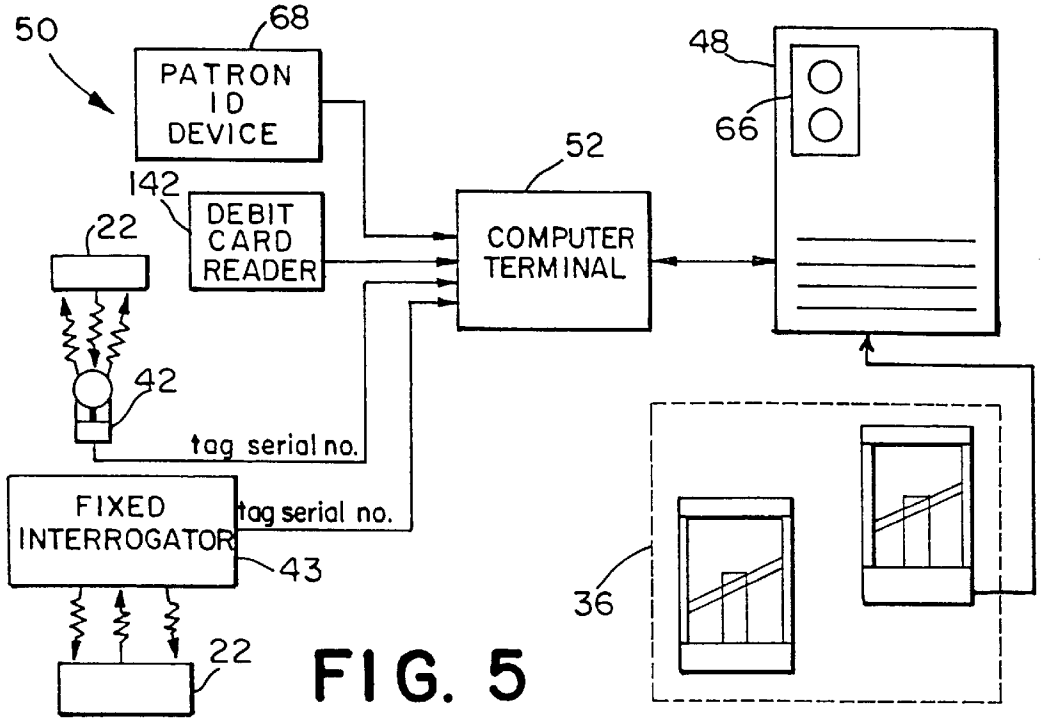

FIG. 5

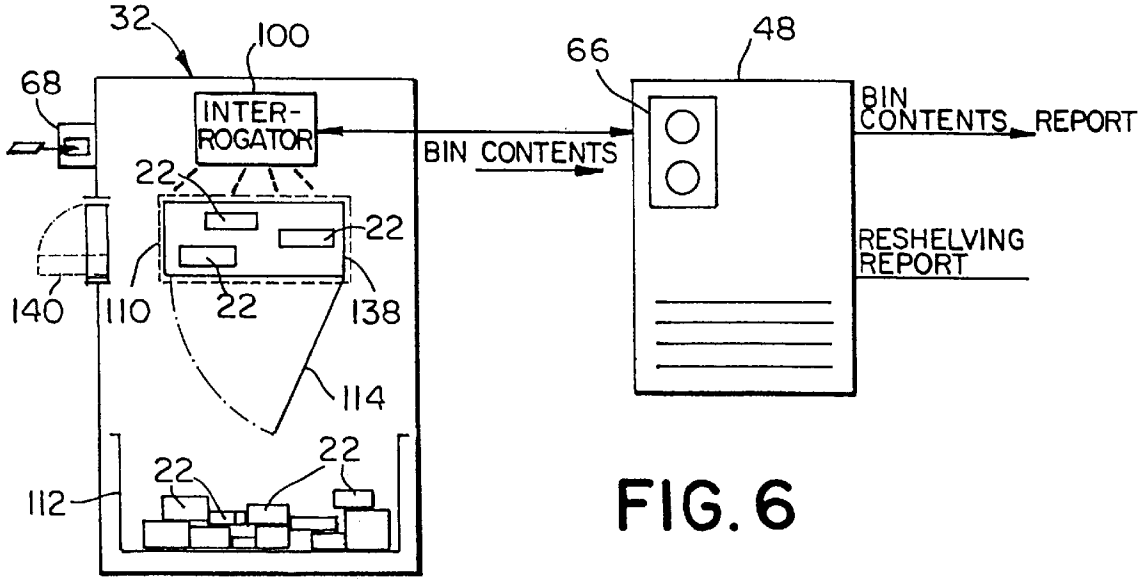

FIG. 6

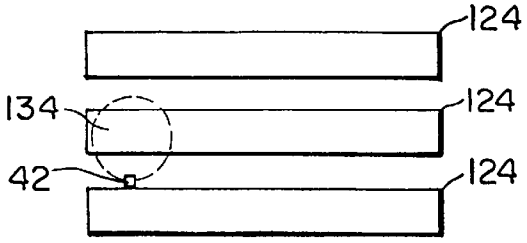

FIG. 10

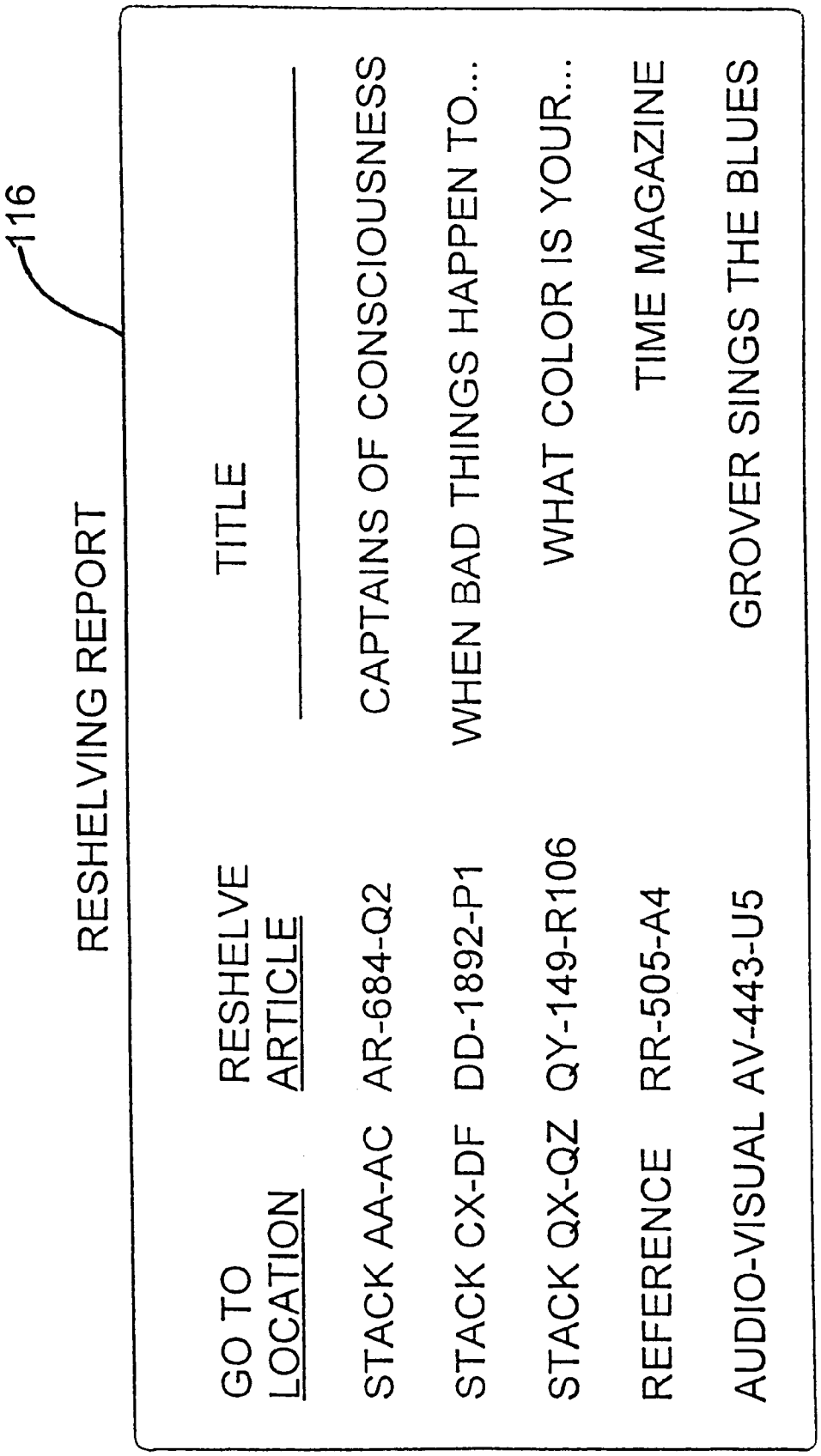
116
RESHELVING REPORT
GO TO LOCATION
RESHELVE ARTICLE
TITLE
STACK AA-AC AR-684-Q2 CAPTAINS OF CONSCIOUSNESS
STACK CX-DF DD-1892-P1 WHEN BAD THINGS HAPPEN TO...
STACK QX-QZ QY-149-R106 WHAT COLOR IS YOUR...
REFERENCE RR-505-A4 TIME MAGAZINE
AUDIO-VISUAL AV-443-U5 GROVER SINGS THE BLUES

FIG. 7

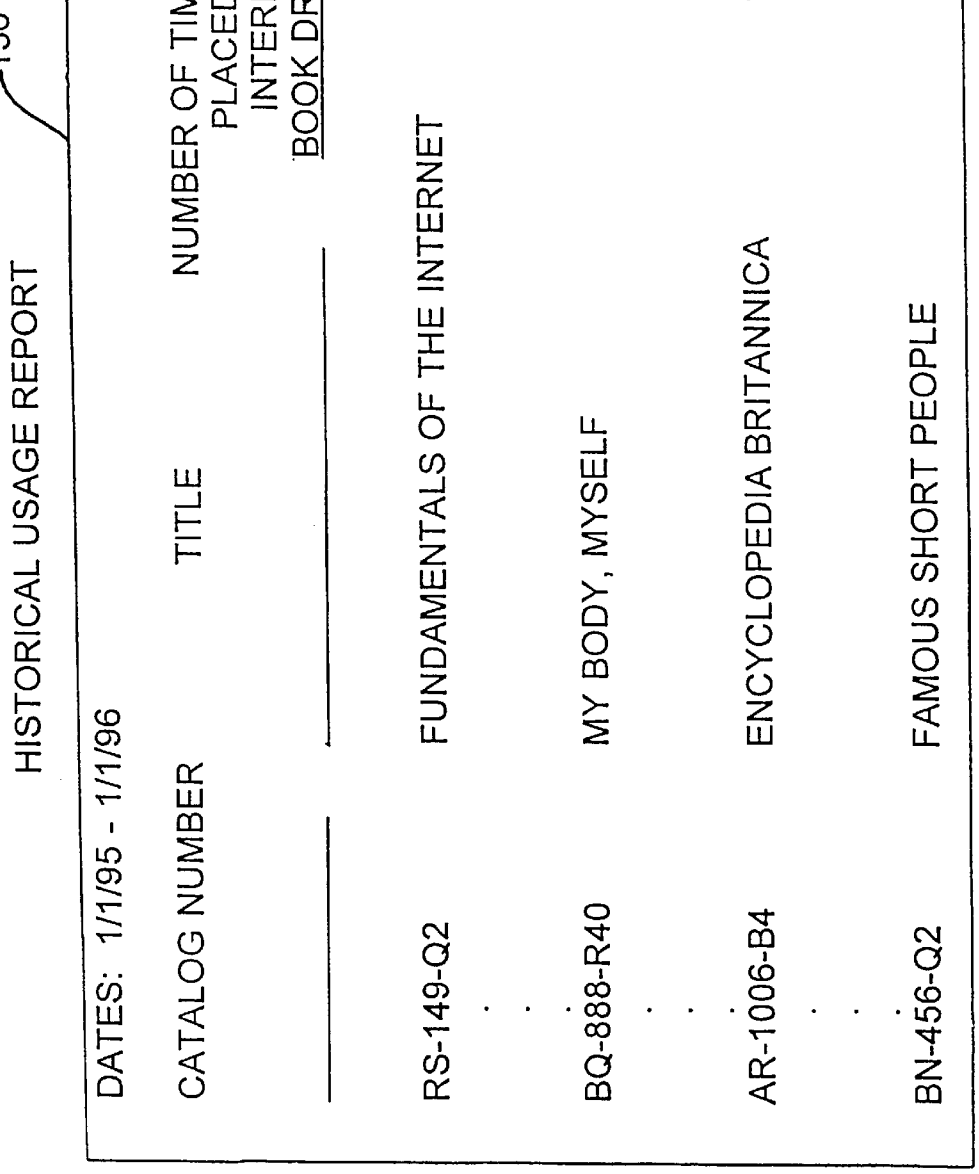
136
HISTORICAL USAGE REPORT
DATES: 1/1/95 - 1/1/96
CATALOG NUMBER
TITLE
NUMBER OF TIMES PLACED IN INTERIOR BOOK DROP
RS-149-Q2
FUNDAMENTALS OF THE INTERNET
160
BQ-888-R40
MY BODY, MYSELF
100
AR-1006-B4
ENCYCLOPEDIA BRITANNICA
101
BN-456-Q2
FAMOUS SHORT PEOPLE
0

FIG. 8

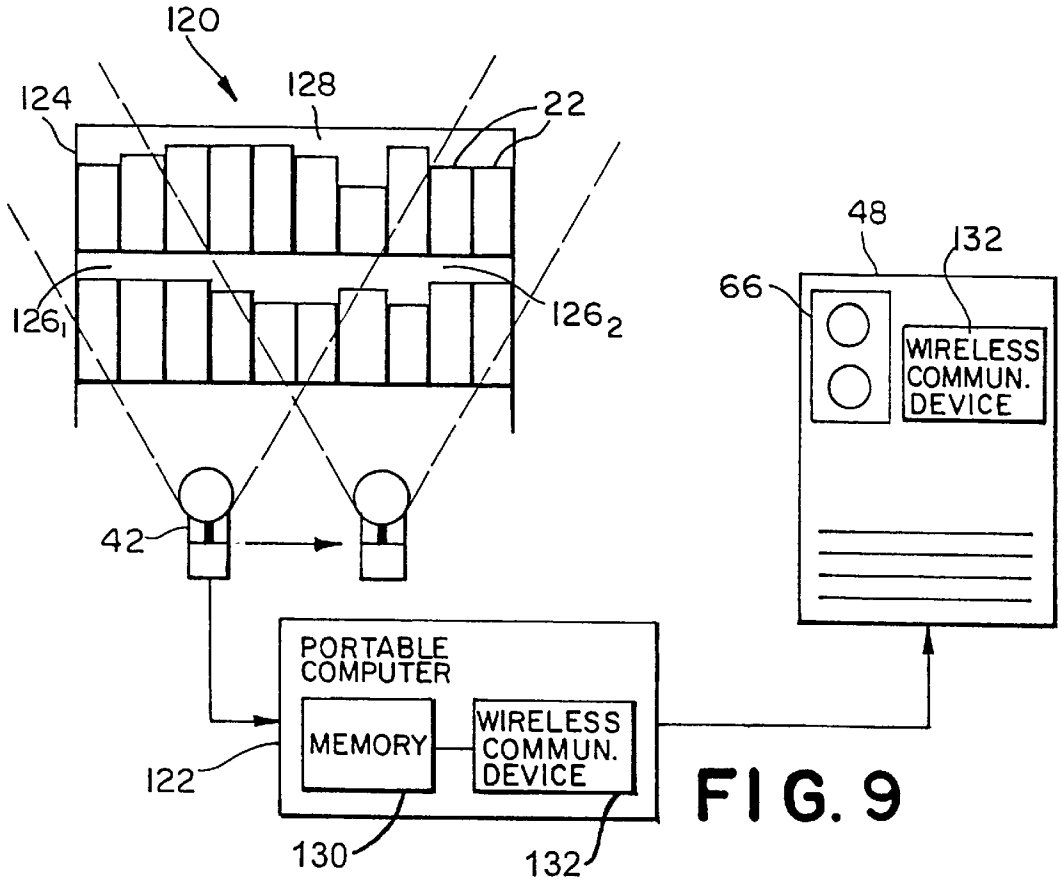

FIG. 9

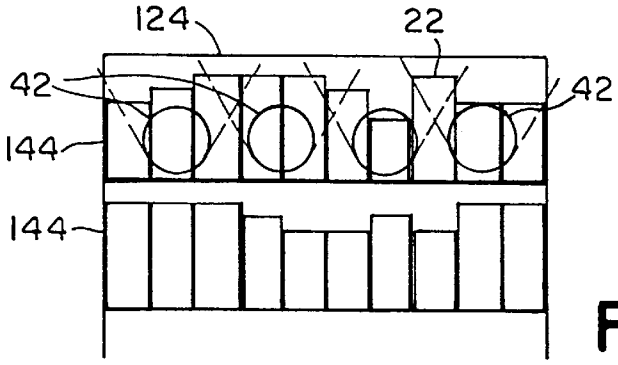

FIG. 11

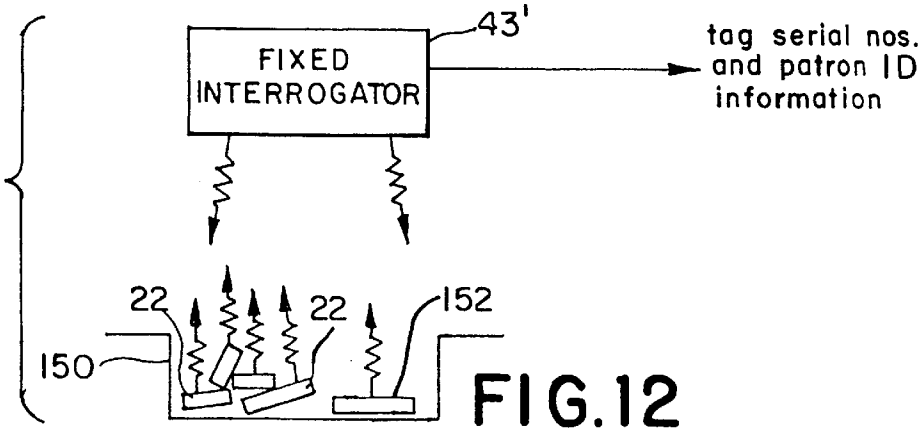

FIG. 12

INVENTORY SYSTEM USING ARTICLES WITH RFID TAGS

BACKGROUND OF THE INVENTION

The present invention relates generally to library inventory and circulation control systems, and particularly to such systems which use RFID tags on books and the like.

Libraries face an enormous task of maintaining and controlling large inventories of books, periodicals, audiovisual products, and the like. To facilitate check-in/checkout, inventorying, and theft control of articles in the library collection, most libraries place bar codes and/or sensitizable magnetic strips on the articles. The bar codes allow the articles to be quickly identified using a scanner. The magnetic strip is used in conjunction with a magnetic detection device at the library exit for theft control. The magnetic strip is normally sensitized. When a patron checks out an article, the magnetic strip is desensitized. When the patron returns the article to the library, the magnetic strip is resensitized. The magnetic detection device triggers an alarm if a patron attempts to pass through a controlled exit carrying an article with a sensitized magnetic strip.

Magnetic strip-based systems have numerous disadvantages. Special equipment must be used to desensitize and resensitize the magnetic strips. Typically, library personnel must operate the equipment to ensure that check-in and checkout is performed accurately. An example of such a system is described in U.S. Pat. No. 4,141,078 (Bridges, Jr. et al.). Another library check-in/checkout system which relies upon tagged articles and which is designed to be operated solely by a patron is described in U.S. Pat. No. 5,288,980 (Patel et al.). Yet another general purpose article inventory control system suitable for use in a library is disclosed in U.S. Pat. No. 4,881,061 (Chambers).

Existing library procedures for handling articles are time consuming and lead to many errors. Reshelving articles is a particularly error-prone, time consuming task. Many articles are returned to the wrong location in the library and are subsequently presumed to be lost until discovered during full inventory checks. Furthermore, taking inventory of a library collection is currently such an expensive and time consuming task that most libraries do not conduct a full inventory check as frequently as they should, if at all.

Libraries often review checkout data to determine which articles are of the most interest to their patrons. This information may be used to make decisions about new purchases or to better allocate existing resources. However, libraries fail to capture a large amount of information regarding usage of their collection by patrons who do not check out the articles but who use the articles while in the library. In fact, so-called "internal circulation" makes up ⅔ to ¾ of the total circulation of many libraries. Thus, checkout data fails to accurately measure which articles are of interest to certain patrons.

The largest expense in running a library is personnel costs. Libraries are constantly searching for ways to perform necessary functions with less employees.

Accordingly, there is still a need for systems which allow library employees to further reduce the time and effort spent in article handling, and which provide library managers with better information about how their collection is being used. The present invention fills these needs.

BRIEF SUMMARY OF THE INVENTION

The present invention provides an inventory control system for use in conjunction with articles which are maintained in a storage area. Each of the articles has an RFID tag attached thereto. Each tag includes an antenna for use in detecting the presence of the article by receiving an interrogation signal and returning a response signal. The tag also includes an integrated circuit connected to the antenna for storing article identification information and for outputting the article identification information with the response signal upon interrogation of the tag. The system comprises at least one article return area for receiving articles which were removed from the storage area and which are to be returned to the storage area, the returned article passing through a zone as the article is returned; an interrogator for monitoring the zone for disturbances in the form of a response signal caused by the presence of a tag within the zone, the interrogator outputting an interrogator output signal when a tag is detected in the zone, each interrogator output signal including the identification information stored in the integrated circuit of an interrogated tag; and a database for receiving the interrogator output signals, the database including inventory data for articles monitored by the system including checkout status data, the received interrogator output signals being used to update the checkout status data.

In another embodiment, the present invention comprises an inventory control method for use in conjunction with articles which are maintained in a storage area. Each of the articles has a radio frequency tag attached thereto, with each tag including an antenna for use in detecting the presence of the article by receiving an interrogation signal and returning a response signal. Each tag also has an integrated circuit connected to the antenna for storing article identification information and for outputting the article identification information with the response signal upon interrogation of the tag. The method comprises the steps of:

(a) scanning a portion of the storage area with a mobile interrogator, the mobile interrogator detecting disturbances in the form of response signals caused by the presence of tags within a predefined zone extending from the interrogator and outputting an interrogator output signal when a tag is detected in the zone, each interrogator output signal including the identification information stored in the integrated circuit of an interrogated tag;

(b) repeating step (a) for an adjacent portion of the storage area and for all remaining portions of the storage area; and

(c) receiving the interrogator output signals in a database, the database including inventory data for the articles maintained in the storage area, the received interrogator output signals being used to update the inventory data.

The present invention further comprises a library inventory control system for use in conjunction with articles which are maintained in a storage area. Each of the articles has a radio frequency tag attached thereto. Each tag includes an antenna for use in detecting the presence of the article by receiving an interrogation signal and returning a response signal and an integrated circuit connected to the antenna for storing article identification information and for outputting the article identification information with the response signal upon interrogation of the tag. The system comprises an inventory database and a mobile interrogator. The database includes a list of articles in the library and the circulation status of each of the articles. The mobile interrogator scans the storage area in discrete portions, detecting disturbances in the form of a response signal caused by the presence of tags within a predefined zone extending from the interrogator. The interrogator also outputs an interrogator output signal when a tag is detected in the zone. Each interrogator

output signal includes the identification information stored in the integrated circuit of an interrogated tag. The inventory database receives the identification information and uses the identification information to update the circulation status of the articles stored therein.

In yet another embodiment, the present invention is a self-service checkout system for a library having articles available for checkout by patrons. Each of the articles has a radio frequency tag attached thereto and each tag includes an antenna for use in detecting the presence of the article by receiving an interrogation signal and returning a response signal and an integrated circuit connected to the antenna for storing article identification information and for outputting the article identification information with the response signal upon interrogation of the tag by an interrogator. The system also has a plurality of patron identification cards, each including a radio frequency tag. The system comprises an interrogator, an inventory database, and a processor. The interrogator is located in a checkout area of the library for interrogating at least one article which the patron wants to borrow and substantially simultaneously interrogating a patron identification (ID) card which identifies a patron to the system. The interrogator receives a response signal containing the stored article identification information for each of the articles to be borrowed and patron identification information from the ID card. The interrogator receives the response signals regardless of the orientation of the articles or patron identification card. The inventory database includes a list of articles in the library and the circulation status of each of the articles. The database receives the patron identification information and the article identification information for each of the articles to be borrowed. The processor is in communication with the database and updates the circulation status of the articles to be borrowed.

In another embodiment, the present invention is a self-service checkout system for a library. The library has articles available for checkout by patrons. Each of the articles has a radio frequency tag attached thereto, and each tag includes an antenna for use in detecting the presence of the article by receiving an interrogation signal and returning a response signal and an integrated circuit connected to the antenna for storing article identification information and for outputting the article identification information with the response signal upon interrogation of the tag by an interrogator. The system comprises a tray for holding a plurality of articles; an interrogator for substantially simultaneously interrogating the plurality of articles placed on the tray which the patron wants to borrow, the interrogator receiving a response signal containing the stored article identification information for each of the plurality of articles to be borrowed, wherein the interrogator receives the response signals regardless of the orientation of the articles; an inventory database including the articles in the library and the circulation status of each of the articles, the database receiving the article identification information for the article to be borrowed; and a processor in communication with the database for updating the circulation status of the articles to be borrowed.

In another embodiment, the present invention is a library inventory control system for use in conjunction with articles which are maintained in a storage area. Each of the articles has a radio frequency tag attached thereto including an antenna for use in detecting the presence of the article by receiving an interrogation signal and returning a response signal and an integrated circuit connected to the antenna for storing article identification information and for outputting the article identification information with the response signal upon interrogation of the tag by an interrogator. The system comprises an inventory database including a list of the articles in the library and the circulation status of each such article; a patron identification device for identifying a patron to the system; an article checkout system located in an article checkout area, the checkout system including a first interrogator for interrogating an article that the patron wants to remove from the storage area, the first interrogator receiving a response signal containing the stored article identification information for the article to be removed; a processor in communication with the first interrogator and the database, the processor receiving the patron identification information and the article identification information for the article to be removed from the first interrogator, and updating the inventory database with the circulation status of the article to be removed; an article check-in system including at least one article return area for receiving articles which were removed from the storage area and which are to be returned to the storage area, each returned article passing through a check-in zone as the article is returned; a second interrogator in communication with the processor, the second interrogator monitoring the check-in zone for disturbances in the form of a response signal caused by the presence of a tag within the zone, and outputting an interrogator output signal when a tag is detected in the zone, each interrogator output signal including the identification information stored in the integrated circuit of an interrogated tag for the article being returned, wherein the inventory database receives the interrogator output signals and updates the checkout status data of the article being returned therewith.

A further embodiment of the present invention is a library inventory control system for use in conjunction with articles which are maintained in the library. Each of the articles has a radio frequency tag attached thereto, each tag including an antenna for use in detecting the presence of the article by receiving an interrogation signal and returning a response signal and an integrated circuit connected to the antenna for storing article identification information and for outputting the article identification information with the response signal upon interrogation of the tag by an interrogator. The system comprises:

an inventory database including a list of the articles in the library and the circulation status of each such article;

a patron identification device for identifying a patron to the system;

an article checkout system located in an article checkout area of the library, the checkout system including a first interrogator for interrogating an article that the patron wants to remove from the library, the first interrogator receiving a response signal containing the stored article identification information for the article to be removed;

a processor in communication with the first interrogator and the database, the processor receiving the patron identification information and the article identification information for the article to be removed from the first interrogator, and updating the inventory database with the circulation status of the article to be removed;

a video camera for capturing images of the checkout area and outputting video signals of the captured images;

a video recorder for storing the video signals on a video storage medium;

an article check-in system including at least one article return area for receiving articles which were removed from the library, each returned article passing through a check-in zone as the article is returned;

a second interrogator in communication with the inventory database, the second interrogator monitoring the

check-in zone for disturbances in the form of a response signal caused by the presence of a tag within the zone, and outputting an interrogator output signal when a tag is detected in the zone, each interrogator output signal including the identification information stored in the integrated circuit of an interrogated tag for the article being returned, wherein the inventory database receives the interrogator output signals and updates the checkout status of the article being returned using the interrogator output signals;

a mobile interrogator for scanning discrete portions of the library and detecting disturbances in the form of response signals caused by the presence of tags within a predefined zone extending from the mobile interrogator, and for outputting an interrogator output signal when a tag is detected in the zone, each interrogator output signal including the identification information stored in the integrated circuit of an interrogated tag, wherein the database receives the identification information and updates the circulation status of the articles stored therein with the information;

an exit interrogator for monitoring an exit from the library, the exit interrogator for interrogating an article passing through the exit and thereby being removed from the library, the exit interrogator receiving a response signal from the tag associated with the article, the response signal containing the stored article identification information for the article passing through the exit;

an exit processor coupled to the exit interrogator, the exit processor receiving an output signal from the exit interrogator including the identification information of the response signal, wherein the exit processor compares the received identification information with the information stored in the database to determine whether the article is recorded therein as checked out, wherein the exit interrogator activates an alarm if the article passing through the exit is not recorded in the database as checked out; and

a zone interrogator located at an exit of a predefined area of the library, the zone interrogator for detecting the removal of tagged articles from the predefined area, wherein the zone interrogator activates an alarm in response to the detection of the removal of an article from the predefined area.

BRIEF DESCRIPTION OF THE DRAWINGS

The foregoing summary, as well as the following detailed description of preferred embodiments of the invention, will be better understood when read in conjunction with the appended drawings. For the purpose of illustrating the invention, there are shown in the drawings embodiments which are presently preferred. It should be understood, however, that the invention is not limited to the precise arrangements and instrumentalities shown. In the drawings:

FIG. **1** is a schematic layout diagram of a library for illustrating general features of the present invention;

FIG. **2** is a block diagram schematic of an RFID tag suitable for use on articles circulated by the library of FIG. **1**;

FIG. **3** is a detailed functional block diagram schematic of an interrogator for use in reading the tag of FIG. **2**;

FIG. **4** is a sample of database records for tagged articles used by the library of FIG. **1**;

FIG. **5** is a block diagram schematic of a patron self-checkout system for use in the library of FIG. **1**;

FIG. **6** is a block diagram schematic of a smart book drop for use in the library of FIG. **1**;

FIG. **7** is a sample of a reshelving report generated from data collected by the smart book drop of FIG. **6**;

FIG. **8** is a sample of a historical usage report generated from data collected by internal smart book drops of FIG. **7**;

FIG. **9** is a block diagram schematic of a shelf scanning inventory system;

FIG. **10** is a top view of a row of shelves and shows an interrogation zone for conducting an inventory of articles using the system of FIG. **9**;

FIG. **11** is a front elevational view of a multi-row shelf and illustrates a method of conducting an inventory of articles using the system of FIG. **9**; and

FIG. **12** shows an alternative inputting process for the patron self-checkout system in FIG. **5**.

DETAILED DESCRIPTION OF THE INVENTION

Certain terminology is used herein for convenience only and is not be taken as a limitation on the present invention. In the drawings, the same reference numerals are employed for designating the same elements throughout the several figures.

FIG. **1** is a schematic diagram of a storage area in the form of a library **10** for use in explaining the novel features of the present invention. While the present invention is explained in the environment of a library, the scope of the invention includes other environments in which articles are maintained in a storage area and are periodically removed (permanently) or are borrowed for limited periods of time by patrons, such as video stores, rental stores, or the like. The storage area may also be associated with a commercial/industrial environment, and may, for example, be a tool crib, maintenance depot, or the like.

An interrogator, as defined herein, is a device which is used to couple energy to an RFID tag to power the tag and to receive data from the tag. The present invention uses different forms of interrogators, including scanners, "smart" and "dumb" pedestals, and the like.

Referring to FIG. **1**, the library **10** is divided into a public space area **16** for use by library patrons, and an employee space area **18**. The public space area **16** includes a storage area in the form of a plurality of shelves or stacks **20** for holding articles such as books, periodicals, audio tapes, CD's, video tapes, wall art, sheet music and the like **22**, a periodical room **23** having additional shelves or stacks **24**, and a plurality of on-line computerized catalogs **26** of library holdings. A circulation desk **28** separates a portion of the public space area **16** from a portion of the employee space area **18**. The employee space area **18** includes a back office operations area **30**. Additional on-line computerized catalogs **26** are located at the circulation desk **28** and in the back office operations area **30**. Other miscellaneous computer equipment may be placed in these locations, such as a bar code reader **46**, or a computer **48**. A database associated with the computer **48** stores inventory data on all of the articles **22** in the library collection, as well as data regarding articles **22** checked out by patrons. The on-line catalogs **26** are connected to the computer **48** and its database. All of the features and elements described above are conventional. Libraries also typically include areas devoted to other resource information, such as videos, CD-ROMs, cassettes or the like. For brevity, these alternative resources are not shown in FIG. **1**. Throughout the specification, the word

articles and books are used interchangeably. However, it should be understood that the scope of the word "article" includes other types of items which are typically found in a library, such as videos, CD-ROMS, cassettes, newspapers or the like.

The library **10** further includes elements which are associated with novel methods and systems for inventory control and article usage tracking.

First, the library includes a plurality of "smart" article return areas or book drops. Prior art book drops merely functioned to provide a temporary storage location for books which were being returned by patrons for check-in and reshelving. The "smart" book drops of the present invention interrogate the articles **22** as they pass into the book drop and read, record and process information about their identity. FIG. **1** shows one smart exterior article return area or book drop **32** and three smart interior article return areas or book drops **34**. The exterior book drop **32** allows patrons to return articles when the library **10** is closed or when the patron does not wish to physically enter the library **10**. The library policy might also require all checked out articles **22** to be returned to the exterior book drop **32**. The book drops **32** or **34** may thus function as a check-in terminal for articles **22** being returned. The interior book drops **34** may be placed in the public area **16** and/or in the employee space area **18**. When patrons return articles **22** to the circulation desk **28**, an employee places the article **22** in the interior book drop **34** located in the employee space area **18**. Patrons may also place borrowed articles **22** in either of the publicly located interior book drops **34**. In both instances, the borrowed articles may be articles being returned after being checked out or articles which were used by the patron while in the library but which were not checked out. Each of the articles **22** have a radio frequency identification (RFID) tag, sometimes referred to as an "intelligent tag" attached thereto. The RFID tag thus becomes an intelligent security tag in the disclosed embodiment of the invention. The RFID tags are described below with respect to FIG. **2**. When the RFID tags are properly interrogated, they return unique information which can be used to determine the identity of the article **22** and its proper location in the library.

Second, the library **10** includes one or more pairs of "smart" pedestals **36**. A pair of "smart pedestals" as described, are pedestal-configured devices which contain interrogators capable of communicating with RFID tags. A pair of smart pedestals **36** reads RFID tags when tagged articles **22** are within a predesignated zone between the pedestals **36**. In FIG. **1**, one pair of smart pedestals **36** monitors a zone in which a patron must pass through to enter or exit the library **10**. Another pair of smart pedestals **36** monitors a zone in which employees enter and exit the library **10**. Each of the zones are optionally monitored by a surveillance camera **38** or a biometric measurement device. The output of each pair of smart pedestals **36** is connected to the database of the computer **48** for verifying whether detected articles **22** within the zone between the pedestals **36** have been properly checked out. The library **10** may also include a pair of sensors, referred to herein as "dumb pedestals **40**", for detecting the presence of articles carrying prior art security tags, such as magnetic security tags or non-intelligent resonant security tags. The dumb pedestals **40** may be used to ensure that periodicals remain within a designated portion of the library **10** (e.g., periodical room **23**). Alternatively, the dumb pedestals **40** may be similar to the smart pedestals **36** but are not connected to the database of the computer **48**. Since no articles **24** are permitted to be removed from the periodical room **23**, the detection of any article **24** between the dumb pedestals **40** triggers an alarm.

Third, the library **10** includes portable radio frequency (RFID) tag scanners or so-called "RFID scanners". These scanners can read identification information associated with an RFID tag, as described more fully below. One RFID scanner **42** is shown at the circulation desk **28**, and a portable scanner **42** is shown adjacent to a set of book shelves **20**. Two additional scanners **42** are associated with a novel checkout station, described next. When portability is not required, a fixed interrogator **43** may be used at the circulation desk **28** and novel checkout station in place of, or in conjunction with, the portable scanner **42**.

Fourth, the library includes a patron self-checkout station **50** for allowing library patrons to check out articles **22** for removal from the premises. The checkout station **50** includes a fixed interrogator **43**, and optionally, one or more optional portable RFID scanners **42**, both of which are used for identifying articles **22** presented at the checkout station **50**. The checkout station **50** also includes at least one computer terminal **52** for receiving data from the fixed interrogator **43** and scanner **42**. The computer terminal **52** is also connected to a patron identification device **68**. The circulation desk **28** also includes a fixed interrogator **43**, an optional scanner **42**, computer terminal **52** and patron identification device **68** which may be used by either patrons or employees for article checkout. The patron self-checkout station **50** is described in more detail below with respect to FIG. **5**.

The novel systems of the present invention all use an RFID tag which is attached to each article **22**. While such tags are well-known in the prior art, one particular type of RFID tag which is particularly suitable for use with the present invention is a passive radio frequency tag having an antenna, and in the preferred embodiment, an RFID tag comprising an antenna or inductor coil connected to an integrated circuit.

FIG. **2** shows general details of a sample RFID tag **54**, suitable for use with the present invention. The tag **54** includes a passive resonant radio frequency (RF) circuit **56** for use in detecting when the tag **54** is within a zone monitored by a reader or interrogator, as is well-known in the art. One well-known type of circuit **56** has a coil antenna **58** and a capacitor **60** which together form a resonant circuit with a predetermined resonant frequency i.e., the selected radio frequency. Power for the tag **54** is derived from the antenna **58** in a conventional manner. Furthermore, the tag **54** includes an integrated circuit (IC) **62** for providing "intelligence" to the tag **54**. The IC **62** is connected to the circuit **56**. The IC **62** includes a programmable memory **64**, such as a 64 bit memory, for storing bits of identification data. Of course, other tag designs could also be used with the present invention, and the invention is not limited to the particular tag **54** shown. For instance, the capacitor **60** could be located on the IC **62**, with only an inductor coil being outside the IC **62**.

The IC **62** outputs a data stream comprised of the 64 bits of stored data when sufficient power is applied thereto. In one embodiment of the invention, the data stream creates a series of data pulses by switching an extra capacitor (not shown) across the coil antenna **58** for the duration of the data pulses. This changes the resonant frequency of the RF circuit **56**, detuning it from the operational frequency. Thus, instead of the RF circuit **56** returning a simple response signal, it returns a signal containing a packet of preprogrammed information. The packet of information (data pulses) is received and processed by interrogator receiving circuitry and is decoded (if necessary) to provide identification information about the article **22**. Other methods of using the data in the IC memory **64** to output identification data from the

tag **54** are within the scope of the invention. The IC **62** is preferably also a passive device and is powered in the same manner as the RF circuit **56** (i.e., by using energy received at the antenna **58** from the interrogator transmitter signal). The tag **54** is thus a so-called "radio frequency identification (RFID) tag". Other types of RFID tags may be used with the present invention. Examples of other RFID tags which are suitable for use as the tag **54** are shown in U.S. Pat. No. 5,446,447 (Carney et al.), U.S. Pat. No. 5,430,441 (Bickley et al.), and U.S. Pat. No. 5,347,263 (Carroll et al.). Typically, RFID tags are not physically deactivated. That is, they are not permanently shorted out in a manner which prevents reuse, and they are not rendered inactive by magnetizing or demagnetizing a magnet therein.

FIG. **3** is a block diagram schematic of a reader or interrogator **100** suitable for use with the tag **54** described in FIG. **2**. The interrogator **100** and the tag **54** communicate by inductive coupling, as is well-known in the art. The interrogator **100** includes a transmitter **102**, receiver **104**, antenna assembly **106**, and data processing and control circuitry **108**, each having inputs and outputs. The output of the transmitter **102** is connected to a first input of the receiver **104**, and to the input of the antenna assembly **106**. The output of the antenna assembly **106** is connected to a second input of the receiver **104**. A first and a second output of the data processing and control circuitry **108** are connected to the input of the transmitter **102** and to a third input of the receiver **104**, respectively. Furthermore, the output of the receiver **104** is connected to the input of the data processing and control circuitry **108**. Interrogators having this general configuration may be built using circuitry described in U.S. Pat. Nos. 3,752,960, 3,816,708, 4,223,830 and 4,580,041, all issued to Walton, all of which are incorporated by reference in their entirety herein. The interrogator **100** is physically implemented as a pair of smart pedestals **36**, or as a portable RFID scanner **42**, as illustrated in FIG. **1**.

One preferred embodiment of a portable scanner **42** has a plate or disc-like resonant circuit antenna about six inches to about eight inches in diameter, and is mounted on an arm extension to reach top and bottom shelves of book stacks.

Before any of the novel systems of the present invention are implemented, the library **10** tags the articles **22** and sets up a database within the computer **48** of all tagged articles **22**. Ideally, all of the articles **22** in the library are tagged. However, the systems can function, although less efficiently, even if not every article is tagged. In one embodiment of the invention, the library **10** receives blank (unprogrammed) tags **54**, assigns unique serial numbers to each of the tags **54** by suitable programming (if they are not already preassigned), physically attaches the tags **54** to each of the articles **22**, and creates a database which correlates each tag **54**, specifically the unique serial number thereof, to the respective article **22**. The programming step is eliminated if the articles **22** arrive pretagged at the library **10**.

In the example illustrated herein, the library **10** applies tags **54** to 100 articles. Next, an inventory database is created in the following manner:

1. An article **22** is read by a fixed interrogator **43** or by a portable RFID scanner **42** which extracts the unique programmed serial number from the tag **54**.
2. A database record is added for the serial number.
3. Next, item identification information is obtained for the article **22**, by any means, such as by reading existing bar codes or labels on the article **22** or by manually entering identifying information or reading such information from another database or storage device. The item identification information is then added to the database record for the respective tag serial number. Most large libraries already have an automated on-line catalog which is generated from an existing database of their collection (i.e., articles **22**). Thus, the library **10** need only add information to an existing data field to identify the serial number of the specific tag **54** which is attached to the article **22**, rather than create an entirely new database of information for tagged articles **22**. Alternatively, the library **10** could maintain its existing on-line catalog and create a new database for tracking the status of the tagged articles **22**. The discussion below presumes that the library **10** sets up either a fully integrated database or that the on-line catalog information is linked with the tagged article database so that all available information about an article **22** is easily retrievable. The database of articles **22** in the library collection also includes circulation status information (not shown), such as whether an article **22** is checked out, who has checked it out, and when it is due back (i.e., article due data).

FIG. **4** is a sample of a sequence of database records created by the process described above. Each record includes a field for tag identification information (e.g., the serial number of the tag **22**) and a field for item identification information. Tag identification information correlates with "article identification information" and so is also referred to as "article identification information." That is, because the tag serial number is unique, it may be used to identify the article. The item identification information may be a Dewey Decimal System call number, a Library of Congress call number, ISBN number, or an arbitrarily assigned number. The last digit of item identification information may be used to identify the copy number of the item in the library's inventory. Item identification information may also include any part of the bibliographic data, such as title, author, publisher and the like. optionally, the database record may include additional information, such as a predetermined location of a large library system where the article **22** is stored. Universities typically have individual department libraries, in addition to a main library. Large governmental library systems have plural branches. The additional location information may be used to properly identify the articles **22** with such respective locations. The database of tagged articles **22** (whether constructed as a separate database or whether appended to the existing on-line catalog **26**) is stored in the computer **48** as database **66**, but may also be stored in a remote computer (not shown).

The database **66** may also optionally include a field for maintaining the checkout status of each article **22** and a field for maintaining the present location of the article **22**. For instance, a checked out article is flagged as checked out in the checkout status field and the patron identification number of the patron who checked out the article is stored in the patron ID field. The patron ID field may also signify that the article is presently on the library shelf (for instance, with a zero (000000) stored in the Patron ID field) and indicate that the article has been returned and not yet reshelved (for instance, with a 000001 stored in the Patron ID field). It will be understood that the checkout status and the patron ID field, as well as other fields, may be stored in a separate database, or stored as a linked list, and that other information may also be stored in the database **66** or linked to the database **66**.

FIGS. **5**, **6** and **9** show systems in accordance with the present invention which can be implemented after the articles **22** are tagged and the database **66** is established.

More particularly, FIG. **5** shows a patron self-checkout system, FIG. **6** shows a smart book drop, and FIG. **9** shows a shelf scanning inventory system. For clarity, these figures are described together with FIG. **1**.

Referring to FIG. **5**, there is shown a schematic block diagram of the patron self-checkout system **50** in FIG. **1**. When a patron wishes to check out an article **22** from the library collection, the patron identifies himself or herself to the system through a patron identification (ID) device **68**. The patron ID device **68** may be a card reader, such as a bar code reader or magnetic stripe reader for reading data from a patron's library card. The patron ID device **68** may also be the same fixed interrogator **43** or RFID scanner **42** used for interrogating articles **22**. Alternatively, the patron ID device **68** may be a biometric (physiological) reading device, such as a fingerprint or iris scanner. In another alternative embodiment of the invention, the patron may directly identify himself or herself to the system **50** by entering an ID and/or password into the computer terminal **52**. The patron ID data is received by the computer terminal **52** which communicates with a database of patrons stored in the computer **48** to verify that the patron is authorized to check out articles **22**. If the patron is not in the patron database or if the patron is delinquent, the checkout procedure may be either terminated or the computer terminal may enter a patron registration routine. After the patron is identified and determined to be an authorized user, the checkout process may begin by performing the following steps. The patron manipulates either the article **22** to be checked out and/or the fixed interrogator **43** or scanner **42** so as to interrogate the tag **54** associated with the article **22** and read the data returned by the tag **54**. Since the article **22** is preferably tagged with the RFID tag **54**, the article **22** need only be placed in proximity to the interrogator **43** or scanner **42**. The data output from the interrogator **43** or scanner **42** includes the serial number of the tag **54**. The tag serial number is sent directly, or through the computer terminal **52**, to the computer **48** which locates the appropriate record for the article **22** in its database **66**. If an article **22** is properly checked into the library **10**, a patron may check it out. The database **66** is then updated to show that the article **22** has been checked out to the patron currently using the station **50**. These checkout steps are repeated for each article **22** that the patron wishes to check out.

FIG. **12** shows an alternative inputting process for the patron self-checkout system **50** in FIGS. **1** and **5**. All of the articles **22** which the patron wishes to check out may be placed on a tray **150** or in a predefined interrogation zone, such as a housing, in the proximity of the fixed interrogator **43'** which simultaneously interrogates all of the articles **22**. RFID interrogators do not require a line of sight, and thus may simultaneously interrogate multiple tags which are placed in a defined region regardless of their orientation in the region. The interrogator **43'** may also be designed to read both a patron ID card **152** (which may also include a tag **54**), as well as the tags **54** attached to the articles **22**. Thus, the patron ID device **68** of FIG. **5** may be incorporated into the interrogator **43'** of FIG. **12**. To check out, the patron merely places the ID card **152** and the articles **22** in a defined region, and initiates a checkout process. The data output from the interrogator **43'** is communicated to the database **48** either directly or via the computer terminal **52** (FIG. **5**).

The computer terminal **52** may be used to prompt the patron through the checkout steps and to return information regarding the steps, such as messages verifying the result of each article interrogation. The computer terminal **52** may also inform a patron of the due date for the article **22** and may optionally include a printer for generating a record of the checkout transaction and due date for the patron.

To ensure that only articles **22** which were properly checked out are removed from the library **10**, the pair of smart pedestals **36** (which incorporates the elements of the interrogator **100** of FIG. **3** therein) interrogates the articles **22** as they pass through a zone in which a patron or employee must pass through to exit the library **10**. The status of each interrogated article **22** is checked in the database **66**. If an article **22** is not properly checked out, a visible and/or audio alarm is triggered to alert the patron and library employees to the problem. Alternatively, the alarm may cause a gate (not shown) to lock, thereby preventing the patron or employee from exiting the library **10**. Alternatively, the information about the non-checked out article is recorded in a database and no alarm is activated. As noted above, the exit zones are optionally monitored by a surveillance camera **38** or biometric measurement device which is activated by the alarm signal to record an image or biometric data of the patron or employee passing through the zone. The image would be useful if the patron or employee disregards the alarm and exits the library **10** with the unchecked out article(s) **22**.

In an optional configuration, check out occurs automatically as the patron exits the library. In this embodiment, the interrogator associated with the smart pedestals **36** can read both the patron ID card (which is also includes an RFID tag) as well as the tags **54** attached to the articles **22**. As the patron walks past the smart pedestals **36**, the articles **22** are automatically checked out. Alternatively, the patron may be required to insert an identification card into a card reader which unlocks an exit door or passage barrier. Smart pedestals **36** are placed at the exit door or passage barrier. As the patron passes through the exit door or passage barrier, the interrogator associated with the smart pedestals **36** checks out the articles **22**.

These optional configurations are particularly suitable for unattended libraries, typically found in private, corporate or university settings.

If the tag of the article **22** has write or rewrite capabilities, one or more bits of tag memory may be used to indicate the "checked out" status of the article **22**. During checkout, the appropriate changes are made to the one or more bits. In this case, if the interrogator associated with the smart pedestals **36** detects that the article has been properly checked out, it is not necessary to search the database **66** to determine the status of the article **22**, and the patron passes through the zone without sounding any alarms or causing any article database searching to occur.

Referring to FIG. **6**, there is shown a schematic block diagram of an exterior smart book drop **32** in FIG. **1**. When a patron wishes to return an article **22** to the library **10**, the patron merely deposits the article **22** into the smart book drop **32**. The exterior smart book drop **32** includes a tray, a panel, a compartment, or the like (labeled as **138**), for initially supporting the articles **22** placed in the book drop **32**. The exterior boundary of the tray **138** is coincident with an interrogation zone **110** defined by dashed lines in FIG. **6**. The book drop **32** also includes a collection bin **112** for receiving and holding articles **22** accepted by the book drop **32**.

In operation, once a patron gains access to the tray **138** and places articles **22** thereon, an interrogator **100** reads the tags **54** of the articles **22** and compares the received serial numbers of the read articles **22** with the serial numbers in its database **66**. If the articles **22** belong to the library **10**, the book drop **32** allows the articles **22** to pass into the collection

bin **112** (such as by releasing a gate **114**) and signals to the database **66** in the computer **48** that the articles **22** were returned. Otherwise, a display panel or like (not shown) informs the patron that the articles **22** do not belong to the library **10** and should be removed from the tray **138**. If the articles do not have tags **54**, and the library **10** has tagged its entire collection, the library **10** also informs the patron that the articles do not belong to the library **10** and should be removed from the tray **138**. If the articles do not have tags **54**, and the library **10** has not tagged its entire collection, the library **10** may wish to accept the articles even though they might not belong to the library collection. Any articles which do not belong to the library **10** are processed by the library employees after the collection bin **112** is emptied.

In alternative embodiments of the book drop **32**, there is no tray **138**. Instead, the articles **22** are merely dropped into the book drop **32** through a slot and fall directly into the collection bin **112**. The articles **22** are read by the interrogator **100** as they fall into the collection bin **112**, or all at once before the bin **112** is emptied. If the articles **22** are interrogated all at once, it is only necessary that the range of the interrogator **100** be sufficient to reach all areas of the bin **112**.

One problem with exterior book drops is that vandals sometimes try to damage articles previously inserted into the book drop or try to damage to the book drop itself. For example, a vandal might pour liquids or messy food items into the book drop. In the worst case, a vandal might pour flammable liquids or burning objects into the book drop to try to start a fire therein. To minimize access to internal parts of the exterior smart book drop **32** by vandals, the book drop **32** may include a patron ID device **68** similar to that described in FIG. **5**, and an access door **140** for gaining access to the tray **138**. The access door **140** opens only if the patron is an authorized user.

The book drop **32** may also have means to detect a jam caused by a stuck article **22**, and means to report the jam to the computer **48**. A jam can be presumed if the interrogator **100** repeatedly detects the same serial number in the interrogation zone **110** over an extended period of time.

At periodic intervals, the library employees empty the collection bin **112** and reshelve the articles **22**. To ensure that all articles are properly checked back in, the library employees may wish to interrogate the collection bin **112** before the articles **22** are reshelved. Optionally, a check-in reader may be positioned adjacent to the book drop or book return processing work space wherein the employee may cause articles **22** to be interrogated as part of the sorting and handling process. A terminal associated with the check-in interrogator can provide instructions to the employee about special handling requirements and the like.

The data generated by the exterior book drop **32** are used by the database **66** to create a bin contents report and a reshelving report. The bin contents report may be used to quickly determine if a particular article of interest is in the collection bin **112** without having to physically sort through the bin **112**. The bin contents report may also highlight articles **22** which are normally kept on reserve or which were requested by another patron. The bin contents report also provides general data about the articles **22** in the collection bin **112**. One type of bin contents report is a reshelving report which may be used for article reshelving. Libraries devote an enormous amount of labor resources to reshelve articles (e.g., books, periodicals and the like) in their collection. Typically, all of the articles **22** are brought to a central location, sorted by location (e.g., floor, stack or shelf, row), placed on different carts and delivered to their respective shelving locations. The reshelving report can be used to dramatically reduce the time and effort spent to reshelve articles **22**.

FIG. **7** is a sample of a reshelving report **116** generated by five articles **22** in a collection bin **112**. The report **116** provides a listing of articles **22** ordered according to shelf location. The shelf location may be the row of shelves which contains the respective article, or any other designating information to assist the employee in returning the articles **22**, such as floor/shelf location.

Providing such a sorted shelving report **116** can aid the reshelving process. For instance, in one method of reshelving using the report **116**, an employee merely moves the collection bin **112** to the first location listed on the reshelving report **116**, locates in the collection bin **112** the first article **22** on the report **116**, and places it on the shelf. This process may then be repeated for each article **22** on the reshelving report **116**. If the collection bin **112** is not movable, the articles **22** may need only be transferred to a movable cart and the process above performed by moving the movable cart from location to location. The reshelving report **116** is preferably ordered to take advantage of a preprogrammed shortest path route through the library. Generating a shortest path route from predesignated locations is well-known in the prior art.

Referring again to FIG. **1**, the library **10** includes one or more interior smart book drops **34** in the public area **16** and/or the employee space area **18**. The interior book drops **34** are similar to the exterior book drop **32**, except that most of the articles **22** placed in the interior book drops **34** are articles **22** that the library patrons use while in the library, but which are not checked out. Thus, it is not necessary to update the status of the returned articles **22** to indicate that they are checked back in. However, the database **66** in the computer **48** should be checked and updated, if necessary, because some of the articles **22** placed in the interior book drops **34** may be previously checked out articles **22** which are being returned by patrons.

A bin contents report is also generated from the interior book drops **34**. (The report does not include previously checked out articles **22** which are being returned by patrons, since this information is tracked elsewhere). Bin contents reports are accumulated over a period of time and used to generate a historical usage report of articles **22** which are used by patrons within the library **10**, but which are not checked out. This information is extremely valuable because it allows the library **10** to capture internal usage data about articles **22** in its collection. Libraries constantly evaluate usage patterns of articles in its collection to determine trends in patron interest to decide what types of new articles **22** to purchase, when to remove articles **22** from the library floor, how floor space should be most effectively used, and to assist in other management tasks. Currently, libraries rely on checkout data, observations by librarians, and comments and requests by patrons to evaluate these issues. However, checkout data does not capture all of the patron activity associated with a library. Patrons typically do not check out every article **22** of interest to them. A large percentage of articles **22** are reference items which cannot be checked out. Some patrons may be embarrassed to check out certain articles and read them only at the library. Some articles **22** do not need to be checked out because the patron can quickly obtain the information of interest from the article **22** while in the library. Observations by librarians and comments and requests by patrons may not accurately capture the interests of certain patrons. The historical usage reports generated from interior book drop data allow the library to better capture patron trends and interests.

FIG. **8** is a sample historical usage report **136**. Of course, the data may be presented and sorted by any appropriate field. Likewise, the historical usage report **136** for the interior book drops **34** may be merged with a historical usage report (not shown) for checked out articles **22** to obtain a more accurate picture of articles **22** of interest to all patrons.

To most efficiently reshelve articles **22**, all of the articles placed in the interior and exterior book drops **34** and **32** may be periodically brought to a single movable cart, and reshelving reports from the interior and exterior book drops **34** and **32** may be merged into a single reshelving report for the single cart.

Information derived from the contents of the book drops **32** and **34** may also be used to help locate a particularly "hot" article **22** which another patron has requested. Library staff presently spend a disproportionate amount of time circulating relatively few hot articles **22**. By knowing exactly which book drop **32**, **34** contains the hot article **22**, the time and effort spent recirculating the hot articles **22** is reduced.

FIG. **9** shows a shelf scanning inventory system **120** for the library **10** in FIG. **1**. The system **120** is used to perform inventory and to verify that articles **22** are placed on the proper shelf. Taking inventory of the library's entire collection is an extremely labor intensive and error-prone activity. By using the system **120**, the inventory process can be greatly simplified and performed by lower skilled employees. Accordingly, inventory checks can be performed more frequently than is the current practice.

The system **120** is implemented using a portable RFID scanner **42** connected at its output to a portable computer **122**. The portable computer **122** stores the data collected by the RFID scanner **42** in a memory **130** and downloads the data to the computer **48** for updating of the database **66**. In one embodiment of the invention, the portable computer **122** and computer **48** each include a wireless communication device **132** for allowing the portable computer **122** to continuously send the scanner data to the computer **48**. In another embodiment of the invention, the portable computer **122** is periodically hardwired or otherwise physically connected to the computer **48** for downloading the data from the memory **130**.

Referring to FIG. **9**, in operation, the RFID scanner **42** is brought into the proximity of a shelf **124**, and a first portion $\mathbf{126}_1$ of the shelf **124** is interrogated by the scanner **42**. The scanner **42** reads the return signals (serial numbers) from the tagged articles **22**. The serial numbers are processed and stored in the memory **130** of the portable computer **122**, and communicated to the database of the computer **48**. Next, the scanner **42** is moved to an adjacent shelf portion $\mathbf{126}_2$, or to another shelf, and the process is repeated. To ensure that no shelf portions are missed, the scanner **42** may overlap a small region of an adjacent, previously scanned shelf portion **126**. This process causes articles **22** in overlap region **128** to be scanned twice, However, if each article **22** has a unique serial number, double scanning has no effect on the accuracy of the inventory scan because the second reading can be ignored.

Referring to FIGS. **9** and **10**, the first portion $\mathbf{126}_1$ is within a predefined zone **134** extending from the scanner **42**. Preferably, the strength of the interrogation signal emanating from the scanner **42** is strong enough to effectively interrogate all articles **22** on first portion $\mathbf{126}_1$ of the shelf **124**, but not strong enough to reach articles **22** on adjacent rows of shelves. This feature is illustrated in FIG. **10** by the imaginary dashed line demarcating the predefined zone **134** which is parallel to the shelves.

After all article holding locations in the library **10** are scanned, the detected serial numbers are compared with the library inventory stored in the database **66** of articles that have not been checked out. A missing article report is generated of all articles **22** which were not located during the scanning process and which have not been checked out. Before an article **22** is presumed to be missing, the shelf should be physically inspected to determine whether the article **22** was merely missed by the scanning process or whether the tag **54** is missing or defective.

The system **120** may also be used to identify mislocated or misshelved articles **22**. As each zone **134** is interrogated, the portable computer **122** and/or computer **48** checks to see if any of the read tags **54** are associated with articles **22** which do not belong in the scanned portion **126**. For example, if the zone **134** covers books having call numbers from AD-140-xxxx to AD-190-xxxx, any articles **22** which have call numbers outside of this range are presumed to be misshelved. The portable computer **122** may signal the employee to locate and properly shelve the misshelved article **22**. It should be recognized that many minor reshelving errors will not be detected by this method, such as when articles **22** with adjacent call numbers are transposed on the shelf (e.g., if AD-140-332D is on the right side of AD-140-332E, instead of the left side where it belongs).

The tag interrogators and scanners used in the present invention can detect a plurality of articles **22** which are simultaneously passed through an interrogator, or which are simultaneously scanned. In most instances, each of the articles **22** receive and respond to the interrogation signal at a different instance in time, even when the articles **22** are physically close together. The string of returned signals is processed to sort out the individual IDs. However, if two articles **22** return an ID signal at exactly the same instance, the interrogator or scanner can either sort out the returned signals to recover the two distinct IDs. Alternatively, the interrogator or scanner can ignore the simultaneously received signals and use subsequent return signals which are not simultaneously received to sort out the individual IDs.

Other variations of the present invention, without limitation, are listed below.

(1) Instead of storing and outputting a serial number, the tag **54** may store and output data about the article itself, such as its title or call number. Book publishers and the like may attach and program the tags **54** using an industry recognized coding scheme at the time books are printed.

(2) As discussed above, the tag **54** may have "write" capabilities, thereby allowing it to also store data about the circulation or checkout status of the article **22**. The write capabilities may also be used to store data regarding the patron who checked out the article **22**, as well as its due date.

(3) The focus of the scanned portion **126** in FIG. **9** can be made very small and narrow so that only one or a few articles **22** are scanned at one time. Thus, the zone **134** in FIG. **10** would encompass only one or a few articles **22**. For example, FIG. **11** shows a scheme wherein the RFID scanner **42** is moved along a single row **144** of articles **22** within a shelf **124**. Each row **144** is scanned separately. (For clarity, only the top portion of the scanner **42** is shown in FIG. **11**.) Narrowing the zone **134** increases the time required to conduct inventory because the scanner **42** must be physically moved more often to cover each shelf. However, misshelved articles **22** are more easily located by scanning a narrower zone. For example, if articles **22** are scanned one by

one, the system computers **66** and/or **122** can verify whether each article has a successively greater (or smaller) call number. In this manner, adjacent transposed articles **22** can be detected.

(4) The patron self-checkout system **50** of FIG. **5** may optionally include a debit card reader **142** connected to the computer terminal **52** for allowing a delinquent patron to pay fines. In this manner, the patron can quickly remedy the delinquency and become immediately authorized to check out subsequent articles **22**.

(5) Research institutions often allow graduate students to keep articles at an assigned carol or kiosk somewhere in the building without checking them out of the building. Ideally, students are supposed to take the articles to the circulation desk to record that the articles are temporarily located at the assigned carol. However, students often neglect to do so. The shelf scanning inventory system **120** may be used to capture these stray articles. Periodically, library employees may walk from carol to carol and scan all of the articles at each carol. A location code identifying the carol may be appended to each article before or after they are scanned.

(6) It is often not feasible to tag certain articles, such as rare books or multi-media products (e.g., CD-ROMs). Accordingly, the patron's identification card may be used to track usage of the article and/or to control access into and out of a selected area of the library where the article is to be used. In this scheme, the patron ID card would preferably be an RFID tagged card. For example, if the patron borrows an item from a multi-media lab, the patron's RFID card and the article's jacket or holder (which is tagged) would be read and associated with each other. If the article is very expensive (e.g., the eight CD-ROM version of the Oxford English Dictionary costs libraries $895 per copy), the exit to the multi-media lab may be blocked if the patron attempts to exit the lab before returning the set of CD-ROMs, as well as the holder.

(7) The smart pedestals **36** may be designed to detect both conventional, (non-intelligent) deactivatable resonant tags and tags **54**. In this manner, the same interrogation device may be used to detect the removal of conventionally tagged articles which have not been properly deactivated. Likewise, the dumb pedestals **40** may be designed to detect both tags **54** and conventional, (non-intelligent) deactivatable resonant tags. In this manner, an RFID tagged article which passes into or out of the periodical room **23** will be detected.

(8) The database records shown in FIG. **4** may include a security field for each tagged article **22**. The security field may identify restrictions on the circulation of the article **22**. For example, the security field may indicate that the article **22** must remain within the periodical room **23**, or the multi-media lab described above. The security field may indicate that the article **22** can only be checked out by selected patrons, such as graduate students, or other predefined groups of patrons. These restrictions are checked by the computer **48** when the article **22** is detected at a check-out counter or at a pedestal **36**.

(9) The term "checkout" is typically associated with borrowing books or the like from a library. However, "checkout" of an article is equivalent to "removal" of an article in contexts wherein checkout does not necessarily involve the borrowing of an article from a storage area.

(10) While the preferred embodiments of the invention use pairs of pedestals at exits, single pedestal interrogators may also be used where appropriate.

(11) The database records of selected articles may be changed by authorized library personnel without the presence of the article. For example, it may be desirable to set an alarm at a library entrance to trigger if an overdue article is detected. It may also be desirable to recall an article before its due date so that if the patron brings the properly checked out article to the library, the library employees are alerted to its presence.

It will be appreciated by those skilled in the art that changes could be made to the embodiments described above without departing from the broad inventive concept thereof. It is understood, therefore, that this invention is not limited to the particular embodiments disclosed, but it is intended to cover modifications within the spirit and scope of the present invention as defined by the appended claims.

We claim:

1. An inventory control system for use in conjunction with articles which are maintained in a storage area, of the articles having a radio frequency tag attached thereto, each tag including an antenna for use in detecting the presence of the article by receiving an interrogation signal and returning a response signal and an integrated circuit connected to the antenna for storing article identification information and for outputting the article identification information with the response signal upon interrogation of the tag, the system comprising:

(a) at least one article return area for receiving articles which were removed from the storage area and which are to be returned to the storage area, the article return area including an interrogation zone and a collection bin for holding returned articles, the returned articles passing through the zone and into the collection bin as the articles are returned, wherein plural articles may be simultaneously placed in the zone;

(b) an interrogator for monitoring the zone for disturbances in the form of a response signal caused by the presence of one or more tags within the zone, the interrogator substantially simultaneously interrogating each article in the zone, the interrogator outputting an interrogator output signal for each tag detected in the zone, each interrogator output signal including the identification information stored in the integrated circuit of an interrogated tag; and

(c) a database for receiving the interrogator output signals, the database including inventory data for articles monitored by the system including checkout status data, the received interrogator output signals being used to update the checkout status data of each returned article.

2. The system according to claim **1** wherein the system tracks articles associated with a library which are available for checkout by patrons, and the storage area comprises shelves of a library.

3. The system according to claim **2** wherein the article return area is a library book drop.

4. The system according to claim **1** wherein the system tracks articles associated with a library and the at least one article return area is within the library, the inventory data further including article usage data.

5. The system according to claim **1**, wherein the database includes storage area location data for the articles monitored by the system.

6. The system according to claim **5** further comprising a computer in communication with the database, the computer including means for generating a report of the storage area

locations for articles in the article return area, the report facilitating return of articles to their respective, appropriate locations in the storage area.

7. An inventory control method for use in conjunction with articles which are maintained in a storage area, each of the articles having a radio frequency tag attached thereto, each tag including an antenna for use in detecting the presence of the article by receiving an interrogation signal and returning a response signal and an integrated circuit connected to the antenna for storing article identification information and for outputting the article identification information with the response signal upon interrogation of the tag, the method comprising the steps of:

(a) scanning a portion of the storage area with a mobile interrogator, the mobile interrogator detecting disturbances in the form of response signals caused by the presence of tags on the articles within a predefined zone extending from the interrogator and outputting an interrogator output signal when a tag is detected in the zone, each interrogator output signal including the identification information stored in the integrated circuit of an interrogated tag, wherein plural articles located in the portion of the storage area may be simultaneously scanned;

(b) repeating step (a) for an adjacent portion of the storage area and for all remaining portions of the storage area;

(c) receiving the interrogator output signals in a database, the database including inventory data for the articles maintained in the storage area, wherein the inventory data is updated using only the received interrogator output signals obtained from the tagged articles;

(d) using the received interrogator output signals and the inventory data to determine whether an article in a particular scanned portion is outside of a range of articles which belong in the scanned portion, and, if so;

(e) signaling that the article is mislocated.

8. A library inventory control system for use in conjunction with articles which are maintained in a storage area, each of the articles having a radio frequency tag attached thereto, each tag including an antenna for use in detecting the presence of the article by receiving an interrogation signal and returning a response signal and an integrated circuit connected to the antenna for storing article identification information and for outputting the article identification information with the response signal upon interrogation of the tag, the system comprising:

(a) an inventory database including a list of articles in the library and the circulation status of each of the articles; and

(b) a mobile interrogator for scanning the storage area in discrete portions, detecting disturbances in the form of a response signal caused by the presence of tags within a predefined zone extending from the interrogator, and for outputting an interrogator output signal for each tag detected in the zone, wherein plural articles located in the discrete portions may be simultaneously scanned, each interrogator output signal including the identification information stored in the integrated circuit of an interrogated tag, the inventory database receiving the identification information and updating the circulation status of the articles stored therein using only the identification information obtained from the interrogated tagged articles.

9. The system according to claim **8** wherein the tags are physically non-deactivatable tags.

10. A self-service check-in system for a library having articles available for checkout by patrons, each of the articles having a radio frequency tag attached thereto, each tag including an antenna for use in detecting the presence of the article by receiving an interrogation signal and returning a response signal and an integrated circuit connected to the antenna for storing article identification information and for outputting the article identification information with the response signal upon interrogation of the tag by an interrogator, the system comprising:

a tray for holding a plurality of articles;

a collection bin for holding returned articles;

a gate for allowing articles held on the tray to pass into the collection bin upon release of the gate;

an interrogator for substantially simultaneously interrogating the plurality of articles placed on the tray which the patron wants to return, the interrogator receiving a response signal containing the stored article identification information for each of the plurality of articles being returned, wherein the interrogator receives the response signals regardless of the orientation of the articles, the interrogator releasing the gate upon receiving acceptable response signals from each of the articles;

an inventory database including the articles in the library and the circulation status of each of the articles, the database receiving the article identification information for each article being returned; and

a processor in communication with the database for updating the circulation status of the articles being returned.

11. The system according to claim **10** further comprising a patron identification (ID) card comprising a radio frequency identification tag, the patron ID card including patron identification information electronically stored thereon, wherein the patron ID card is placed on the tray and interrogated substantially simultaneously with the articles being returned.

12. The system according to claim **11** wherein the database includes a field for storing the patron ID corresponding to any previously checked out articles.

13. A library inventory control system for use in conjunction with articles which are maintained in a storage area, each of the articles having a radio frequency tag attached thereto, each tag including an antenna for use in detecting the presence of the article by receiving an interrogation signal and returning a response signal and an integrated circuit connected to the antenna for storing article identification information and for outputting the article identification information with the response signal upon interrogation of the tag by an interrogator, the system comprising:

an inventory database including a list of the articles in the library and the circulation status of each such article;

a patron identification device for identifying a patron to the system;

an article checkout system located in an article checkout area, the checkout system including a first interrogator for interrogating an article that the patron wants to remove from the storage area, the first interrogator receiving a response signal containing the stored article identification information for the article to be removed;

a processor in communication with the first interrogator and the database, the processor receiving the patron identification information and the article identification information for the article to be removed from the first interrogator, and updating the inventory database with the circulation status of the article to be removed;

an article check-in system including at least one article return area for receiving articles which were removed from the storage area and which are to be returned to the storage area, the article return area including an interrogation check-in zone and a collection bin for holding returned articles, each returned article passing through the check-in zone and into the collection bin as the article is returned, wherein plural articles may be simultaneously placed in the zone; and

a second interrogator in communication with the processor, the second interrogator monitoring the check-in zone for disturbances in the form of a response signal caused by the presence of a tag within the zone, the interrogator simultaneously interrogating each article in the zone and outputting an interrogator output signal for each tag which is detected in the zone, each interrogator output signal including the identification information stored in the integrated circuit of an interrogated tag for the article being returned, wherein the inventory database receives the interrogator output signals and updates the checkout status data of each article being returned therewith.

14. The system according to claim **13** further comprising:

a mobile interrogator for scanning the storage area in discrete portions, detecting disturbances in the form of response signals caused by the presence of tags within a predefined zone extending from the mobile interrogator, and for outputting an interrogator output signal when a tag is detected in the zone, each interrogator output signal including the identification information stored in the integrated circuit of an interrogated tag, wherein the database receives the identification information and updates the circulation status of the articles stored therein with the information.

15. The system according to claim **13** further comprising:

a video camera for capturing images of the checkout area and outputting video signals of the captured images; and

a video recorder for storing the video signals on a video storage medium.

16. The system according to claim **13** further comprising:

an exit interrogator for monitoring an exit from the storage area, the exit interrogator for interrogating an article passing through the exit and thereby being removed from the storage area, the exit interrogator receiving a response signal from the tag associated with the article, the response signal containing the stored article identification information for the article passing through the exit.

17. The system according to claim **16** further comprising an exit processor coupled to the exit interrogator, the processor receiving an output signal from the exit interrogator including the identification information of the response signal, wherein the processor compares the received identification information with the information stored in the database to determine whether the article is recorded therein as checked out.

18. The system according to claim **17** wherein the exit interrogator activates an alarm if the article passing through the exit is not recorded in the database as checked out.

19. The system according to claim **13** wherein the tag is a physically non-deactivatable tag.

20. The system according to claim **13** wherein the library includes a periodical room, the system further comprising a zone interrogator located at an exit of the periodical room for detecting the removal of tagged articles therefrom.

21. The system according to claim **20** wherein the zone interrogator activates an alarm in response to the detection of the removal of an article from the periodical room.

22. A library inventory control system for use in conjunction with articles which are maintained in the library, each of the articles having a radio frequency tag attached thereto, each tag including an antenna for use in detecting the presence of the article by receiving an interrogation signal and returning a response signal and an integrated circuit connected to the antenna for storing article identification information and for outputting the article identification information with the response signal upon interrogation of the tag by an interrogator, the system comprising:

an inventory database including a list of the articles in the library and the circulation status of each such article;

a patron identification device for identifying a patron to the system;

an article checkout system located in an article checkout area of the library, the checkout system including a first interrogator for interrogating an article that the patron wants to remove from the library, the first interrogator receiving a response signal containing the stored article identification information for the article to be removed;

a processor in communication with the first interrogator and the database, the processor receiving the patron identification information and the article identification information for the article to be removed from the first interrogator, and updating the inventory database with the circulation status of the article to be removed;

a video camera for capturing images of the checkout area and outputting video signals of the captured images;

a video recorder for storing the video signals on a video storage medium;

an article check-in system including at least one article return area for receiving articles which were removed from the library, each returned article passing through a check-in zone as the article is returned;

a second interrogator in communication with the inventory database, the second interrogator monitoring the check-in zone for disturbances in the form of a response signal caused by the presence of a tag within the zone, and outputting an interrogator output signal when a tag is detected in the zone, each interrogator output signal including the identification information stored in the integrated circuit of an interrogated tag for the article being returned, wherein the inventory database receives the interrogator output signals and updates the checkout status of the article being returned using the interrogator output signals;

a mobile interrogator for scanning discrete portions of the library and detecting disturbances in the form of response signals caused by the presence of tags within a predefined zone extending from the mobile interrogator, and for outputting an interrogator output signal when a tag is detected in the zone, wherein plural articles located in the discrete portions may be simultaneously scanned, each interrogator output signal including the identification information stored in the integrated circuit of an interrogated tag, wherein the database receives the identification information and updates the circulation status of the articles stored therein using only the identification information obtained from the interrogated tagged articles;

an exit interrogator for monitoring an exit from the library, the exit interrogator for interrogating an article

passing through the exit and thereby being removed from the library, the exit interrogator receiving a response signal from the tag associated with the article, the response signal containing the stored article identification information for the article passing through the exit;

an exit processor coupled to the exit interrogator, the exit processor receiving an output signal from the exit interrogator including the identification information of the response signal, wherein the exit processor compares the received identification information with the information stored in the database to determine whether the article is recorded therein as checked out, wherein the exit interrogator activates an alarm if the article passing through the exit is not recorded in the database as checked out; and

a zone interrogator located at an exit of a predefined area of the library, the zone interrogator for detecting the removal of tagged articles from the predefined area, wherein the zone interrogator activates an alarm in response to the detection of the removal of an article from the predefined area.

* * * * *