IN THE UNITED STATES DISTRICT COURT
FOR THE NORTHERN DISTRICT OF INDIANA
SOUTH BEND DIVISION

UNVERFERTH MFG. CO., INC., 601 South Broad Street Kalida, OH 45853	)	**COMPLAINT**
Plaintiff,	)	
v.	)	Civil Action No. 3:23-cv-00653
PAR-KAN CO., LLC 2915 West 900 South Silver Lake, IN 46982	)	**JURY TRIAL DEMANDED**
Defendant.		

COMPLAINT FOR PATENT INFRINGEMENT

Plaintiff, Unverferth Manufacturing Company, Inc. ("Unverferth"), by and through the undersigned counsel, files this Complaint for patent infringement against Defendant, Par-Kan Co., LLC ("Par-Kan"), and hereby alleges as follows:

NATURE OF THE ACTION

1. This is a civil action for patent infringement. Plaintiff's claims are based on the unauthorized and infringing manufacture, use, sale and/or offer for sale by Defendant of load-unload seed tender products including, for example, the EF275 SeedWeigh, EF375 SeedWeigh, 2 Pack SeedWeigh, and 4 Pack SeedWeigh products.

THE PARTIES

2. Plaintiff Unverferth is a corporation organized and existing under the laws of the State of Ohio having a principal place of business at 601 South Broad Street, Kalida, Ohio 45853.

Unverferth Exhibit 2006
Par-Kan v. Unverferth
IPR2024-01426

3. Upon information and belief, Defendant Par-Kan is a corporation organized and existing under the laws of the State of Indiana having a place of business at 2915 West 900 South, Silver Lake, Indiana 46982.

JURISDICTION AND VENUE

4. This is an action for patent infringement arising under the provisions of the Patent Laws of the United States, 35 U.S.C. §§ 271, 281 and 283-285. This Court has subject matter jurisdiction pursuant to 28 U.S.C. §§ 1331 and 1338(a).

5. Upon information and belief, Defendant has a regular and established place of business in Silver Lake, Indiana, in this judicial district, in which it manufactures, sells, and offers for sale, and has manufactured, sold, and offered for sale, load-unload SeedWeigh seed tender products. These SeedWeigh seed tender products infringe Unverferth patents and are the subject of the patent infringement cause of action set forth herein.

6. This Court has personal jurisdiction over Defendant.

7. Venue is proper in this Court pursuant to 28 U.S.C. §§ 1391 and 1400(b).

PATENTS-IN-SUIT

8. On March 3, 2015, the United States Patent and Trademark Office ("USPTO") duly and legally issued U.S. Patent No. 8,967,940 ("the '940 patent"), which is attached as Exhibit 1.

9. Plaintiff Unverferth is the owner of all right, title and interest in and to the '940 patent, including the right to sue for and recover all past, present and future damages for infringement of the '940 patent.

10. On August 29, 2017, the USPTO duly and legally issued U.S. Patent No. 9,745,123 ("the '123 patent"), which is attached as Exhibit 2.

11. Plaintiff Unverferth is the owner of all right, title and interest in and to the ’123 patent, including the right to sue for and recover all past, present and future damages for infringement of the ’123 patent.

12. Plaintiff Unverferth manufactures, uses, sells, and/or offers for sale seed tender products that practice the ’940 and ’123 patents, including by way of example its Seed Runner 2755, Seed Runner 2755XL, Seed Runner 3755, Seed Runner 3755XL, Seed Runner 3955XL, Seed Runner 3966DXL, Seed Runner 4955DXL, Seed Runner 5000, Seed Pro 200, Seed Pro 210, Seed Pro 400, Seed Pro 410, and Seed Pro 410XL products.

13. Plaintiff Unverferth has complied with the statutory marking provision of 35 U.S.C. § 287(a) with respect to the ’940 and ’123 patents. Unverferth has affixed a serial number decal to its products that either identifies the ’940 and ’123 patents directly and/or directs customers to a publicly accessible website that identifies the ’940 and ’123 patents.

14. Defendant had knowledge of Unverferth’s ’940 and ’123 patents. These patents are continuations of U.S. Patent No. 8,221,047, which was the subject of a previous lawsuit filed by Unverferth against Par-Kan in 2013. Upon information and belief, Par-Kan had knowledge that competitors in the load-unload seed tender market were being sued for infringement on the ‘940 and ‘123 patents because, *inter alia*, Par-Kan had received subpoenas in cases against competitors identifying the patents by number. Unverferth also sent Par-Kan a letter on April 28, 2023, alleging that Par-Kan’s SeedWeigh seed tender products infringe Unverferth’s ’940 and ’123 patents.

DEFENDANT’S INFRINGING ACTS

15. Upon information and belief, Defendant has manufactured, used, sold, and offered for sale in the United States load-unload seed tender products that infringe one or more claims of

Unverferth's '940 and '123 patents under United States law. Non-limiting examples of Defendant's infringing products include the SeedWeigh products that have been manufactured, used, sold, and offered for sale since 2013, including the EF275 SeedWeigh, EF375 SeedWeigh, 2 Pack SeedWeigh, and 4 Pack SeedWeigh products (the "Accused Products"). Annotated photographs of the Accused Products are attached as Exhibits 3-6.

16. Defendant's Accused Products are a seed or grain tender including a frame, a main hopper mounted on the frame, and having a main hopper discharge.

17. Defendant's Accused Products include a support arm (having first and second ends), a first coupling connecting the first end of the support arm to the base, a conveyor having a conveyor hopper on one end and a conveyor discharge on the other end, and a second coupling connecting the second end of the support arm to the conveyor. *See* Exhibits 3-6.

18. Defendant's Accused Products include a base that is located below the main hopper, and the first coupling is rotatable about a vertical axis of rotation. *See* Exhibits 4-5.

19. The first end of the support arm in Defendant's Accused Products is rotatable about a horizontal axis of rotation, and the second coupling makes it such that the conveyor's axis of rotation is not parallel to its longitudinal axis and is rotatable between an unloading and loading position. *See* Exhibits 4-6.

COUNT 1
(INFRINGEMENT OF THE '940 PATENT)

20. Plaintiff repeats and realleges the allegations of Paragraphs 1 to 19 above, as if set forth herein.

21. Upon information and belief, Defendant has directly infringed and is directly infringing at least claim 16 of the '940 patent by making, using, offering for sale and/or selling the infringing products, and will continue to do so unless enjoined by this Court.

22. Upon information and belief, Defendant has indirectly infringed and is indirectly infringing at least claim 16 of the ’940 patent by inducing others – including Defendant’s distributors, resellers, dealers and customers – to directly infringe at least claim 16 of the ’940 patent by using, offering for sale and/or selling the infringing products, and will continue to do so unless enjoined by this Court.

23. On information and belief, Par-Kan has known about the ‘940 patent since it issued in 2015, or shortly thereafter. Additionally, Plaintiff gave actual notice to Par-Kan that it is infringing the ‘940 patent on April 28, 2023. On information and belief, Par-Kan has acted despite an objectively high likelihood that its actions constituted infringement of a valid patent, and it knew or should have known that its actions demonstrated infringement of a valid patent. Par-Kan knew or should have known that its actions constituted infringement of the Asserted Patents in view of the litigation history between Unverferth and Par-Kan regarding the ’047 patent (and the fact that the Asserted Patents are continuations of the ’047 patent), and in view of the fact that Par-Kan knew Unverferth was asserting these patents against competitors in the load-unload seed tender market. Unverferth subpoenaed Par-Kan’s records regarding the Accused Products in connection with those competitor suits. Accordingly, Par-Kan’s acts of infringement from when it first learned of the ’940 patent, and at least since April 28, 2023, constitute willful infringement of the ‘940 patent.

24. Defendant’s infringement of the ’940 patent has damaged Plaintiff and will continue to cause Plaintiff substantial and irreparable harm unless enjoined by this Court.

COUNT 2
(INFRINGEMENT OF THE ’123 PATENT)

25. Plaintiff repeats and realleges the allegations of Paragraphs 1 to 24 above, as if set forth herein.

26. Upon information and belief, Defendant has directly infringed and is directly infringing at least claim 10 of the ’123 patent by making, using, offering for sale and/or selling the infringing products, and will continue to do so unless enjoined by this Court.

27. Upon information and belief, Defendant has indirectly infringed and is indirectly infringing at least claim 10 of the ’123 patent by inducing others – including Defendant’s distributors, resellers, dealers and customers – to directly infringe at least claim 10 of the ’123 patent by using, offering for sale and/or selling the infringing products, and will continue to do so unless enjoined by this Court.

28. On information and belief, Par-Kan has known about the ‘123 patent since it issued in 2017, or shortly thereafter. Additionally, Plaintiff gave actual notice to Par-Kan that it is infringing the ‘123 patent on April 28, 2023. On information and belief, Par-Kan has acted despite an objectively high likelihood that its actions constituted infringement of the ‘123 patent, and Par-Kan knew or should have known that its actions constituted infringement of the ‘123 patent. Par-Kan knew or should have known that its actions constituted infringement of the Asserted Patents in view of the litigation history between Unverferth and Par-Kan regarding the ’047 patent (and the fact that the Asserted Patents are continuations of the ’047 patent), and in view of the fact that Par-Kan knew Unverferth was asserting these patents against competitors in the load-unload seed tender market. Unverferth subpoenaed Par-Kan’s records regarding the Accused Products in connection with those competitor suits. Accordingly, Par-Kan’s acts of infringement from when they first learned of the ’123 patent, and at least since April 28, 2023, constitute willful infringement of the ‘123 patent.

29. Defendant’s infringement of the ’123 patent has damaged Plaintiff and will continue to cause Plaintiff substantial and irreparable harm unless enjoined by this Court.

PRAYER FOR RELIEF

WHEREFORE, Plaintiff prays that this Court enter judgment that:

A. the ’940 patent is directly infringed by Defendant;

B. the ’940 patent is indirectly infringed by Defendant;

C. Defendant’s infringement of the ’940 patent has been willful;

D. Defendant be preliminarily and permanently enjoined from manufacturing, using, selling and offering to sell the infringing products in the United States prior to the expiration of the ’940 patent;

E. Plaintiff be awarded damages adequate to compensate it for Defendant’s infringement of the ’940 patent including lost profits, but in an amount no less than a reasonable royalty, and that such damages be trebled according to 35 U.S.C. § 284;

F. the ’123 patent is directly infringed by Defendant;

G. the ‘123 patent is indirectly infringed by Defendant;

H. Defendant’s infringement of the ’123 patent has been willful;

I. Defendant be preliminarily and permanently enjoined from manufacturing, using, selling and offering to sell the infringing products in the United States prior to the expiration of the ’123 patent;

J. Plaintiff be awarded damages adequate to compensate it for Defendant’s infringement of the ’123 patent including lost profits, but in an amount no less than a reasonable royalty, and that such damages be trebled according to 35 U.S.C. § 284;

K. this case is exceptional within the meaning of 35 U.S.C. § 285, and that all costs and expenses of this action, including reasonable attorneys’ fees, be awarded to Plaintiff; and

L. Plaintiff be awarded such further relief as the Court may deem just, necessary, and/or proper.

JURY DEMAND

Plaintiff demands a trial by jury.

Dated: July 11, 2023

Respectfully submitted,

/s/ Robert J. Palmer

Robert J. Palmer (6316-71)
May Oberfell Lorber
4100 Edison Lakes Parkway, Suite 100
Mishawaka, IN 46545
Phone: (574) 243-4100
Facsimile: (574) 232-9789
rpalmer@maylorber.com

Attorneys for Plaintiff Unverferth Mfg. Co., Inc.

OF COUNSEL:

Joseph A. Hynds
Jenny L. Colgate
Brett A. Postal
ROTHWELL, FIGG, ERNST & MANBECK, P.C.
901 New York Ave., Suite 900
Washington, DC 20001
Phone: (202) 783-6040
Facsimile: (202) 783-6031
jhynds@rothwellfigg.com
jcolgate@rothwellfigg.com
bpostal@rothwellfigg.com

Attorneys for Plaintiff Unverferth Mfg. Co., Inc.

EXHIBIT 1

US008967940B2

(12) **United States Patent**
Petersen et al.

(10) **Patent No.: US 8,967,940 B2**
(45) **Date of Patent: *Mar. 3, 2015**

(54) **SEED CARRIER WITH PIVOTING CONVEYOR**

(75) Inventors: **Brian James Petersen**, Ottawa, OH (US); **David Richard Smith**, Fort Jennings, OH (US)

(73) Assignee: **Unverferth Manufacturing Company, Inc.**, Kalida, OH (US)

(*) Notice: Subject to any disclaimer, the term of this patent is extended or adjusted under 35 U.S.C. 154(b) by 0 days.

This patent is subject to a terminal disclaimer.

(21) Appl. No.: **13/541,553**

(22) Filed: **Jul. 3, 2012**

(65) **Prior Publication Data**

US 2013/0004271 A1 Jan. 3, 2013

Related U.S. Application Data

(63) Continuation of application No. 12/031,867, filed on Feb. 15, 2008, now Pat. No. 8,221,047.

(60) Provisional application No. 60/901,321, filed on Feb. 15, 2007.

(51) **Int. Cl.**
B60P 1/00 (2006.01)
A01C 15/00 (2006.01)

(52) **U.S. Cl.**
CPC ***A01C 15/006*** (2013.01); *B60P 1/00* (2013.01); ***A01C 15/003*** (2013.01)
USPC **414/523**; 198/312

(58) **Field of Classification Search**
CPC B60P 1/00; B60P 1/36; B60P 1/42; B65G 41/002; B65G 41/005; B65G 41/008; B65G 67/02; A01C 15/003; A01C 15/006; A01D 90/00; A01D 90/02; A01D 90/10
USPC 414/523, 328, 329; 111/11; 198/312, 198/315, 316, 317, 318
See application file for complete search history.

(56) **References Cited**

U.S. PATENT DOCUMENTS

427,736 A * 5/1890 Bufkin 198/317
1,905,434 A * 4/1933 Boyer 414/328

(Continued)

OTHER PUBLICATIONS

Model 2300 Air System and the Model 4800 Air Drill, both made and sold by Concord, as illustrated in the Concod brochure, 12 pages, 1994.

(Continued)

Primary Examiner — Saul Rodriguez
Assistant Examiner — Glenn Myers
(74) *Attorney, Agent, or Firm* — Rothwell, Figg, Ernst & Manbeck, P.C.

(57) **ABSTRACT**

A seed carrier includes a main hopper coupled with a frame via leg members. The main hopper has a discharge. A base plate is coupled with the frame. A support arm is rotatably coupled with the base plate at a first end. A belt driven conveyor having a conveyor hopper at a first end and a discharge at a second end is rotatably coupled with a second end of said support arm at an approximate center of gravity thereof. A latch mechanism is provided for detachably coupling the first end of the conveyor with the first end of the support arm such that the conveyor hopper is position below the main hopper discharge. When the conveyor is uncoupled from the first end of the support arm, the conveyor can rotate to a loading position wherein the discharge thereof can be positioned over the main hopper.

23 Claims, 11 Drawing Sheets

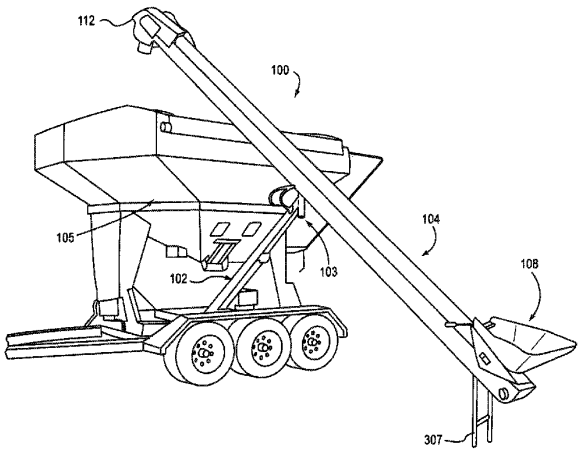

(56) **References Cited**

U.S. PATENT DOCUMENTS

3,090,515	A		5/1963	Crowther	
3,493,136	A		2/1970	Spellman, Jr.	
3,498,483	A	*	3/1970	Meharry	414/523
3,968,771	A	*	7/1976	Walgenbach et al.	118/303
3,994,512	A	*	11/1976	Parker et al.	280/687
3,997,215	A	*	12/1976	Parker et al.	298/24
4,037,745	A		7/1977	Hengen et al.	
4,218,169	A		8/1980	Arends	
4,274,790	A		6/1981	Barker	
4,312,621	A		1/1982	Quanbeck et al.	
4,411,581	A		10/1983	Niewold	
4,419,037	A		12/1983	Neiwold	
4,491,216	A		1/1985	Sawby	
4,503,803	A	*	3/1985	Barnes	118/303
4,613,275	A		9/1986	Karlowsky	
4,742,938	A		5/1988	Niewold	
5,013,208	A		5/1991	Grieshop	
5,468,113	A		11/1995	Davis	
5,484,249	A	*	1/1996	Klatt	414/523
5,516,253	A		5/1996	Linscheid et al.	
5,520,495	A	*	5/1996	Sukup	414/523
5,529,455	A		6/1996	Kaster et al.	
5,538,388	A		7/1996	Bergkamp et al.	
5,582,221	A		12/1996	Smith et al.	
5,615,990	A	*	4/1997	Grieshop	414/526
5,718,556	A	*	2/1998	Forsyth	414/503
5,785,481	A		7/1998	Ockels	
5,800,116	A	*	9/1998	Smith et al.	414/523
5,888,044	A	*	3/1999	Baskerville	414/523
5,980,189	A		11/1999	Rubner	
6,113,339	A		9/2000	Adams	
6,120,233	A	*	9/2000	Adam	414/502
6,209,880	B1	*	4/2001	Turnwald et al.	277/402
6,325,588	B1	*	12/2001	Nolin	414/526
6,604,620	B2	*	8/2003	Dennis	198/312
6,767,174	B2	*	7/2004	Cresswell	414/523
6,908,380	B2		6/2005	Silver	
7,223,059	B2		5/2007	Smith et al.	
7,267,519	B2		9/2007	Cresswell et al.	
7,393,275	B2		7/2008	Voss et al.	
7,428,956	B2	*	9/2008	Scherman	198/312
7,488,149	B2	*	2/2009	Waldner	414/532
7,500,814	B2		3/2009	Meyer	
7,500,817	B2	*	3/2009	Furrer et al.	414/522
7,553,228	B2		6/2009	Dillon	
8,221,047	B2	*	7/2012	Petersen et al.	414/523
2003/0057055	A1	*	3/2003	Haukaas et al.	198/313
2006/0180062	A1		8/2006	Furrer et al.	
2009/0110524	A1	*	4/2009	Hoffmann	414/507

OTHER PUBLICATIONS

Convey-All, BTS 290 Seed Tender Product Specification, 2 pages, Jun. 6, 2006.

Convey-All Ind. Inc., Engineering Drawings of BT-1500, 4 pages, May 13, 2002.

Par-Kan Company, Engineering Drawings, 2 pages, Apr. 28, 2003.

Great Plains Manufacturing, Inc., Parts Manual—Model ADC2220 Air Drill Cart, May 1, 1997, 61 pages.

Great Plains Manufacturing, Inc., Parts Manual—Model ADC2220 Air Drill Cart, Mar. 1, 2000, 69 pages.

Reexamination File History for Control No. 95000691, 374 pages.

Order Denying Request for Inter Panes Reexamination for Control No. 95000691, Nov. 7, 2012, 15 pages.

Par-Kan Company, Final Invalidity Contentions submitted in *Unverferth Mfg. Co., Inc.* v. *Par-Kan Co.*, Civil Action No. 13-cv-00097 (N.D. Ind.), Oct. 25, 2013, 130 pages.

Par-Kan Company, Preliminary Invalidity Contentions submitted in *Unverferth Mfg. Co., Inc.* v. *Par-Kan Co.*, Civil Action No. 13-cv-00097 (N.D. Ind.), Jun. 17, 2013, 169 pages.

Declaration of Shawn Gerdeman with Exhibits A-E dated Sep. 18, 2014, 24 pages.

* cited by examiner

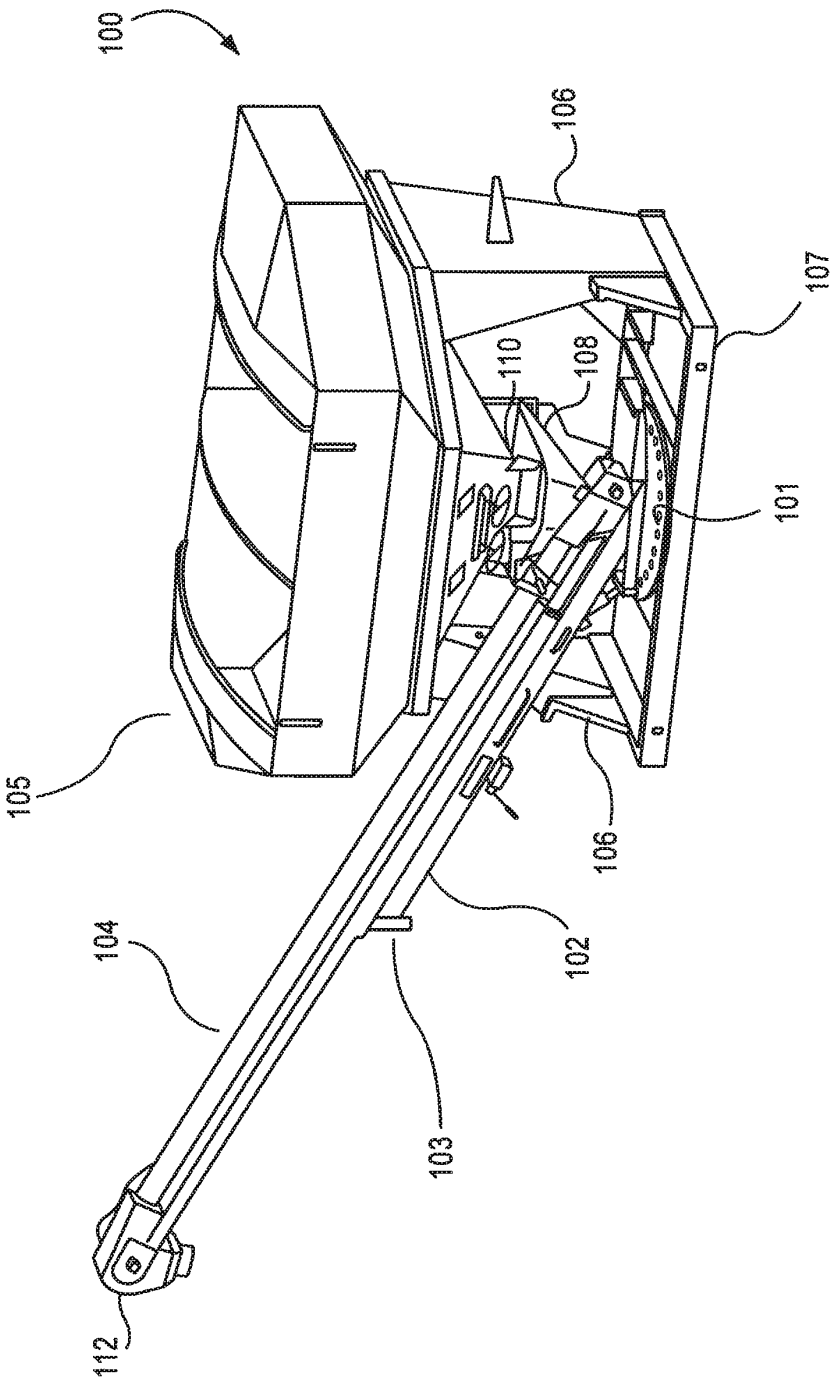

FIG.1

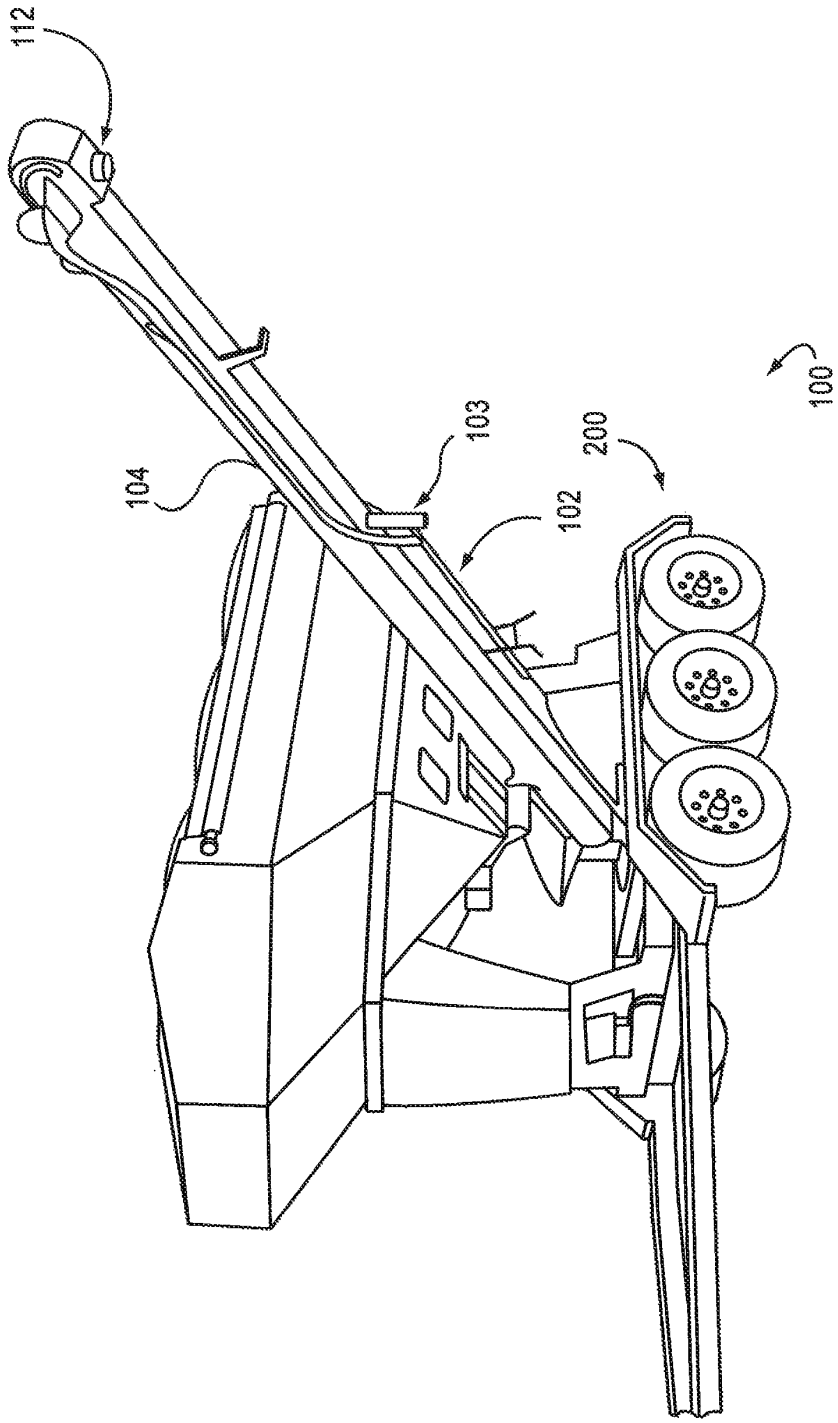

FIG.2

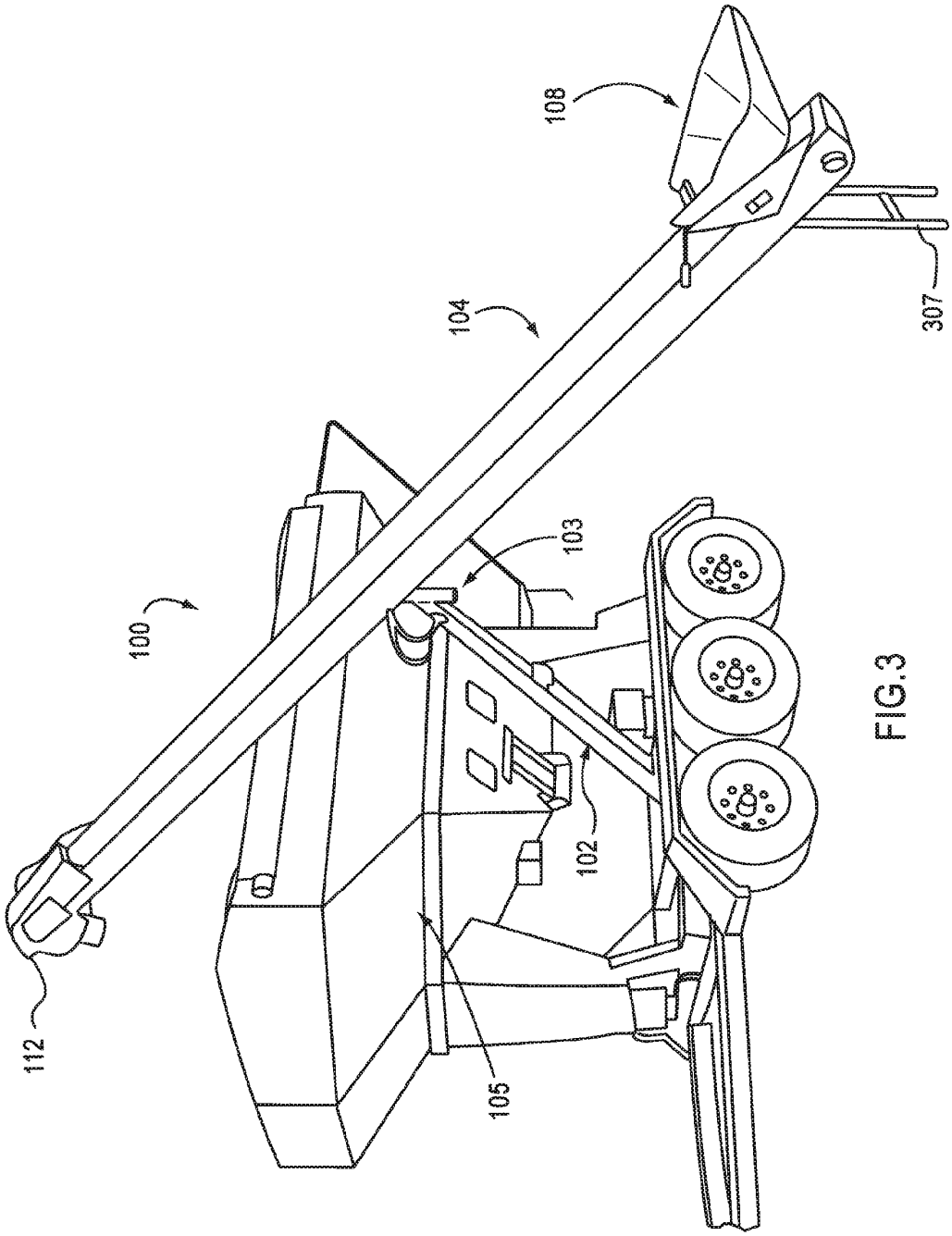

FIG.3

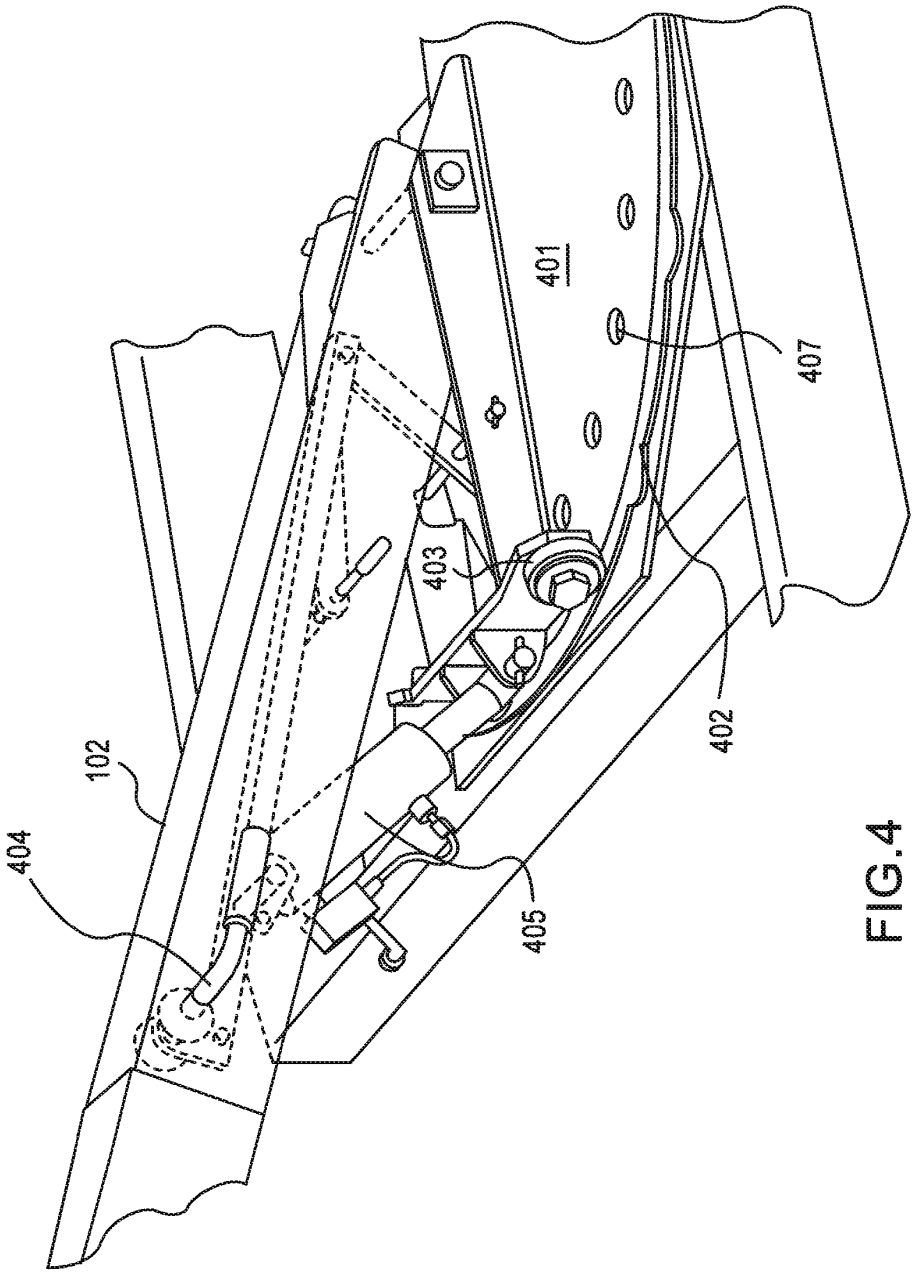

FIG.4

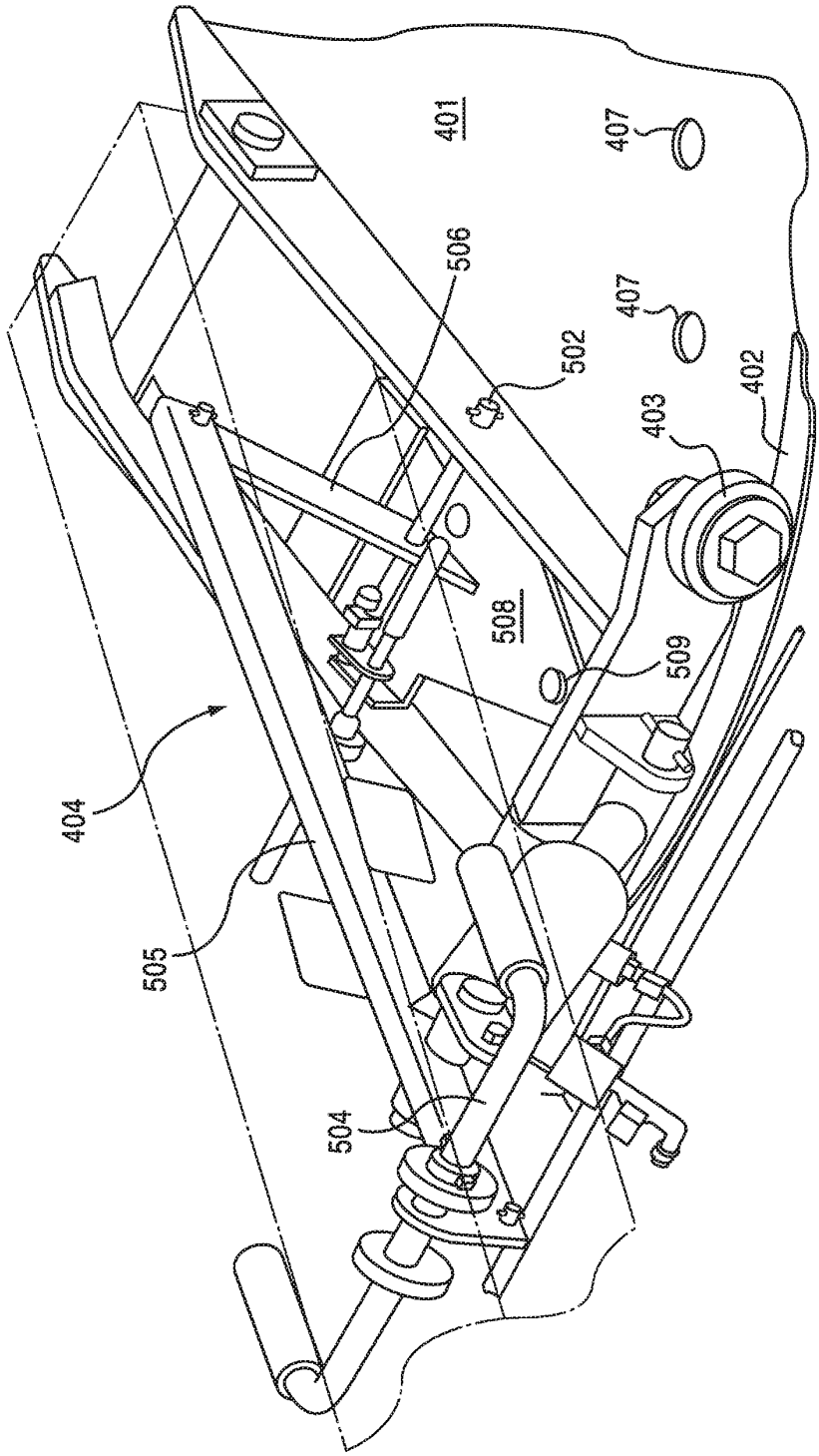

FIG.5

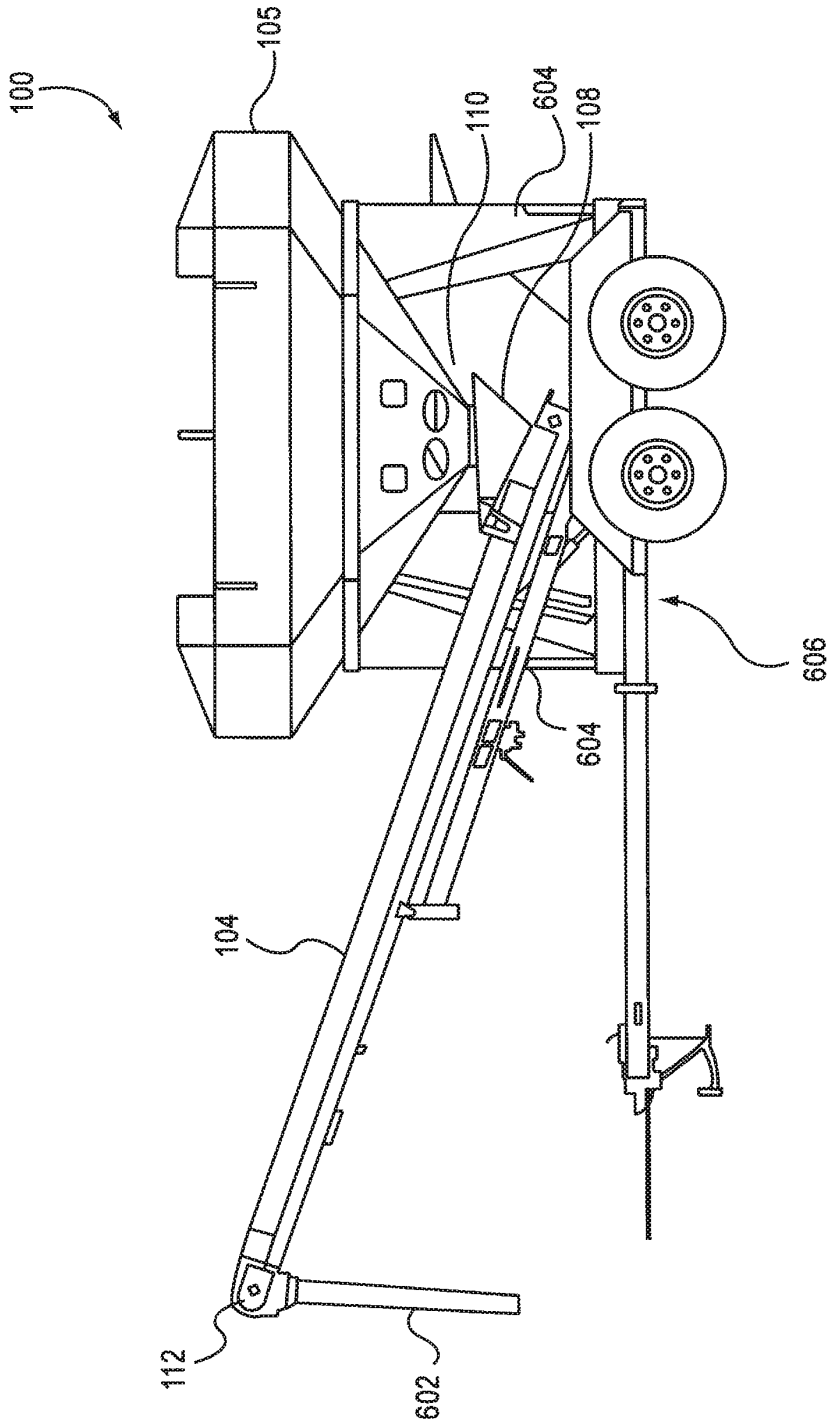

FIG.6

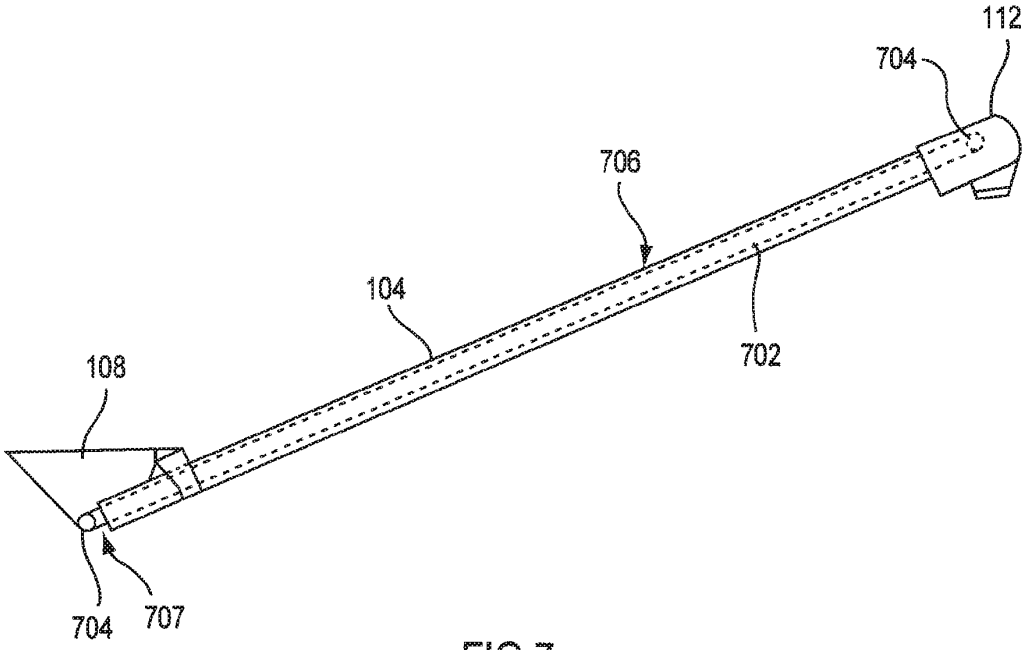

FIG.7

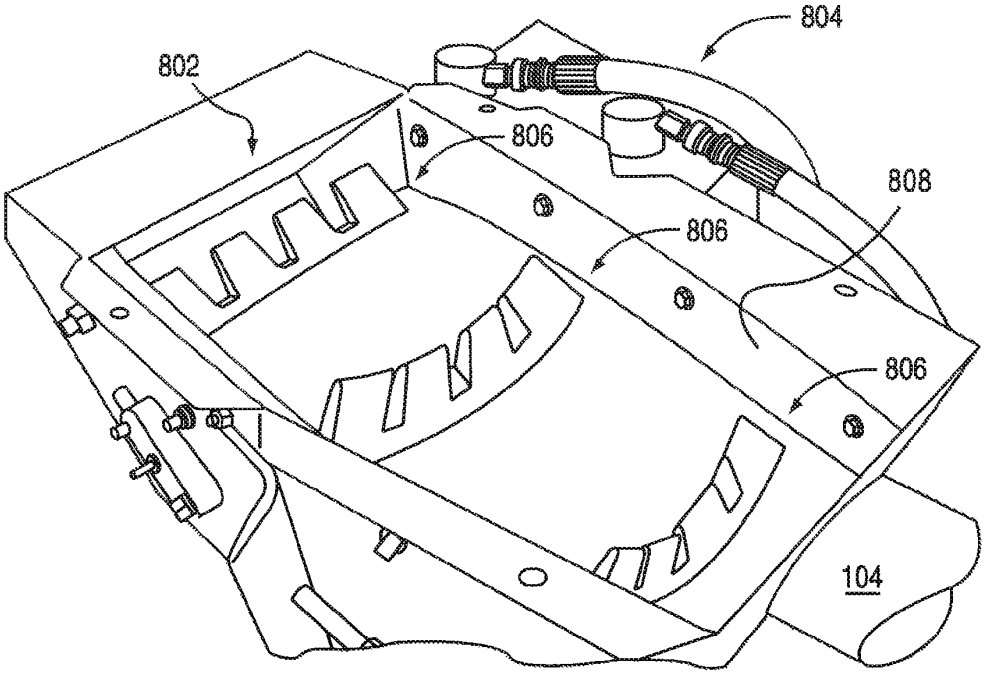

FIG.8

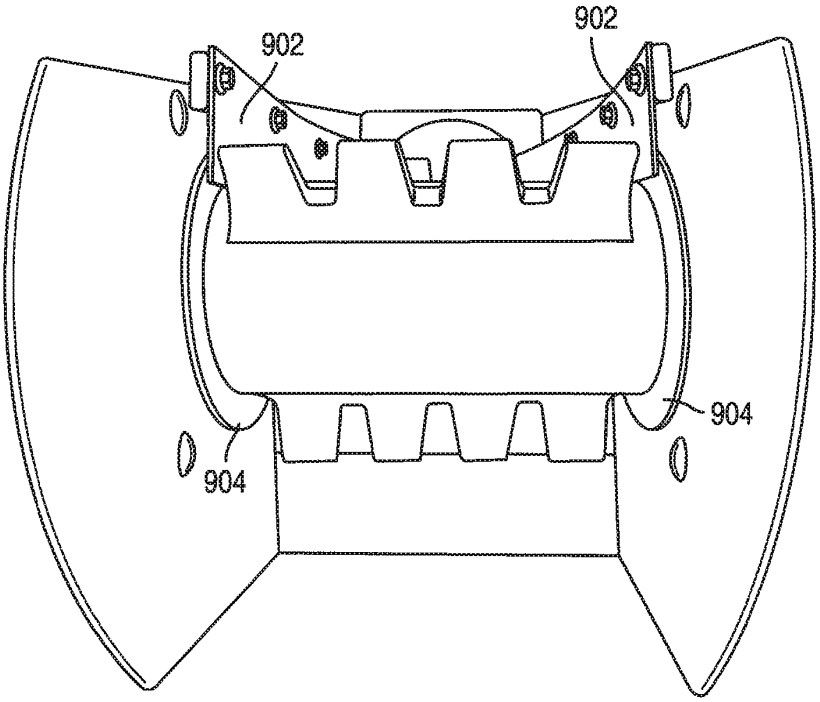

FIG.9

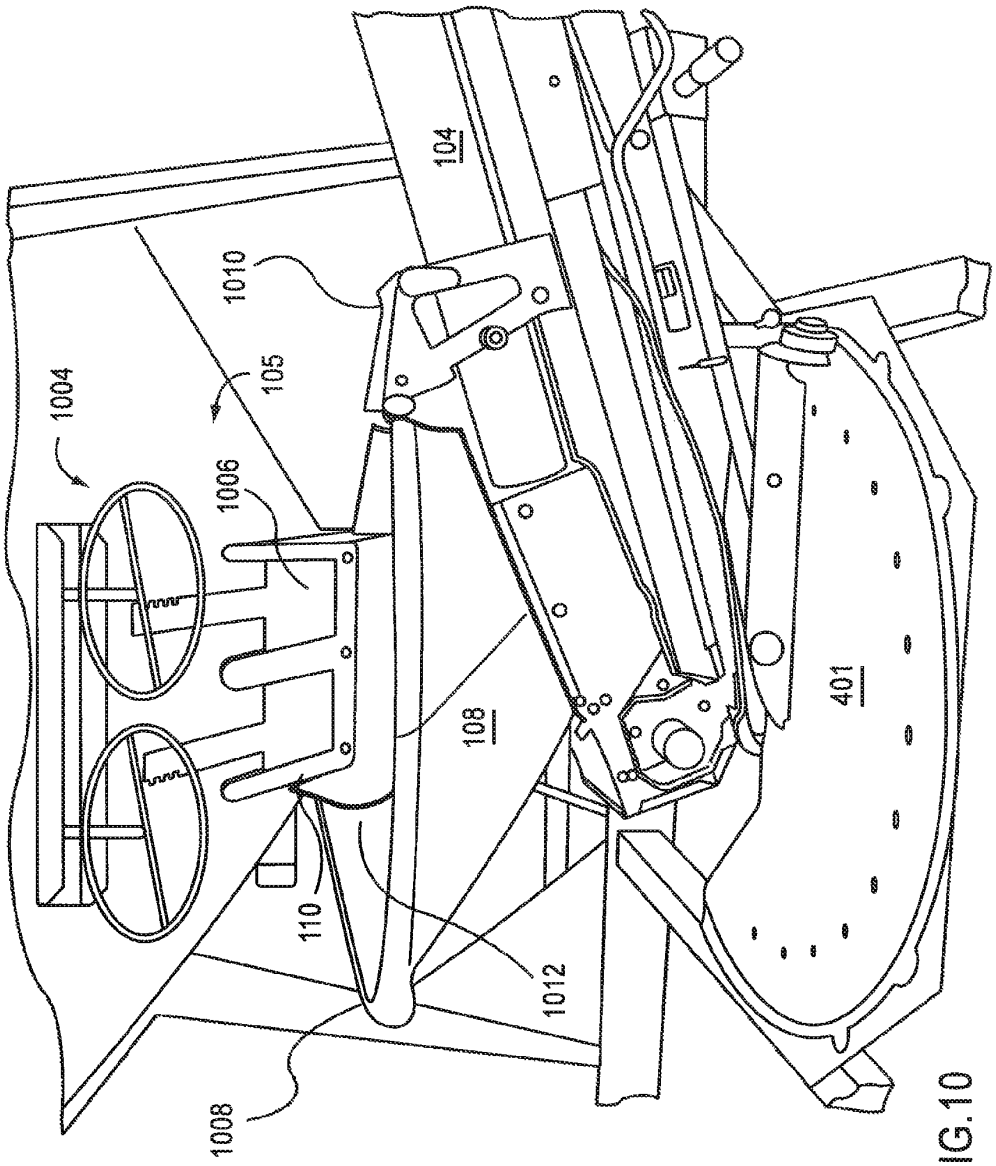

FIG.10

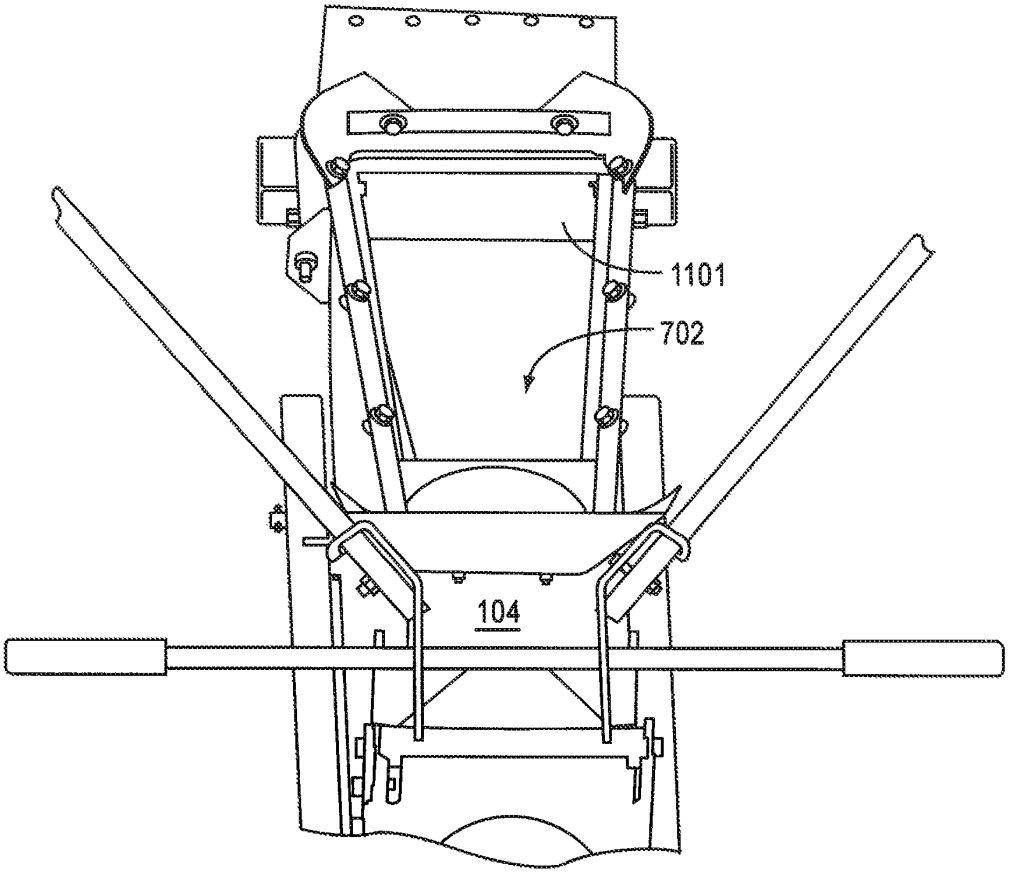

FIG.11

SEED CARRIER WITH PIVOTING CONVEYOR

CROSS-REFERENCE TO RELATED APPLICATION

The present application claims priority to U.S. Ser. No. 12/031,867, filed Feb. 15, 2008, now patented, and claims priority to Provisional Patent Application Ser. No. 60/901,321 filed on Feb. 15, 2007, the entire disclosure of which is incorporated herein by reference.

BACKGROUND OF THE INVENTION

1. Field of the Invention

The present invention relates generally to a conveyor system for a grain or seed carrier. The conveyor system includes a novel pivot system that allows it to either load or unload a container by pivoting it into a loading or unloading position.

2. Description of the Related Art

Conveyor systems for moving grain, seed, etc. are well known. Auger systems are used to rapidly move grain such as feed or the like, while belt driven conveyors are often used for moving more expensive payload, such as seed.

One belt driven conveyor system includes a generally flat belt constructed from a flexible, sturdy material such as rubber or nylon. The conveyor is housed in a tube with rollers on both ends so that the belt may rotate in order to transmit material from one end to the other. Such conveyors are used for unloading seed carriers or the like. However, current conveyors have several problems.

First, current conveyors have the problem that the material being moved can be damaged by the rollers. Second, current conveyors do not have a full range of motion as implemented in seed carries. Third, current conveyors are only implemented for unloading,

There is a need for new and improved conveyor systems that allow a wagon to be unloaded and loaded using a single mechanism.

SUMMARY OF THE INVENTION

According to an embodiment of the present invention, a seed tender or carrier is provided that includes a main hopper for holding seed and a conveyor for transferring seed to and from the main hopper.

According to an embodiment of the present invention, in an unloading position, one end of the conveyor may be positioned under the discharge of the main hopper and coupled with a pivoting support arm. In the unload position, the conveyor can be used to transfer seed from the main hopper to another location, such as to a planter, seeding unit, or the like. A pivot mechanism allows the conveyor to be rotated from under the box into a loading position in which the conveyor intake can rest on the ground or on a stand while the conveyor discharge is positioned to allow conveyed material to be discharged into the main hopper. In this loading position, the conveyor can be used to fill the main hopper.

According to an embodiment of the present invention, a conveyor hopper is provided on the intake side of the conveyor.

According to an embodiment of the present invention, the pivot mechanism allows the conveyor to swing from side to side to simplify unloading of the main hopper and the filling of planters, etc. The pivot mechanism can include a hydraulic cylinder that adjusts the vertical height of the conveyor discharge relative for different filling applications.

According to an embodiment of the present invention, a pivot single pivot point can be provided at one end of the support arm to allow the conveyor to be rotated between the loading and unloading position. The conveyor may be balanced on the pivot point at a location near or at the center of gravity, thereby permitting the conveyor to be rotated with minimal effort on the part of the operator.

According to an embodiment of the present invention, the conveyor can be rotated through at least 180 degrees about a vertical axis and so that it may be positioned in either a forward or rearward transport position. This feature enables the tender to be pulled by different vehicles such as by a pick-up truck with the conveyor forward or by a grain truck with the conveyor rearward.

Further applications and advantages of various aspects and embodiments of the present invention are discussed below with reference to the drawing figures.

BRIEF DESCRIPTION OF THE DRAWINGS

FIG. **1** illustrates a seed carrier according to an embodiment of the present invention.

FIG. **2** is a view of a seed carrier in an unloading position according to an embodiment of the present invention.

FIG. **3** is a view of a seed carrier in a loading position according to an embodiment of the present invention.

FIG. **4** is a view of a base system for the seed carrier according to an embodiment of the present invention.

FIG. **5** is a view of a lever mechanism for the base system according to an embodiment of the present invention.

FIG. **6** is a view of a seed carrier in a transport position according to an embodiment of the present invention.

FIG. **7** is a view of a belt conveyor for the seed carrier according to an embodiment of the present invention.

FIG. **8** is a view of the discharge end of a conveyor according to an embodiment of the present invention.

FIG. **9** is a forward view of a conveyor belt wrapping around a roller according to an embodiment of the present invention.

FIG. **10** is a view of the conveyor hopper in an unloading position according to an embodiment of the present invention.

FIG. **11** illustrates the receiving end of the conveyor according to one embodiment of the present invention.

DETAILED DESCRIPTION OF THE PREFERRED EMBODIMENTS

While the present invention may be embodied in many different forms, a number of illustrative embodiments are described herein with the understanding that the present disclosure is to be considered as providing examples of the principles of the invention and such examples are not intended to limit the invention to preferred embodiments described herein and/or illustrated herein.

In embodiments of the present invention, the novel conveyor pivot system can be implemented with seed carrier or seeding machines. The following section describes non-limiting examples of illustrative seeding equipment according to embodiments of the present invention. It should be appreciated that the following examples are provided for illustration and the present invention is not intended to be limited to the embodiments described herein.

FIG. **1** is a diagram depicting a seed carrier having a tube conveyor according to an embodiment of the present invention. The seed carrier **100** includes a main hopper **105** coupled to a frame **107** by legs **106**. A conveyor **104** is supported by a support arm **102** coupled with a pivoting mechanism **101**

fixed to the frame **107**. The conveyor **104** is pivotably coupled with the support arm by a coupling **103** at a point that is preferably near or at the center of gravity of the conveyor **104**. The conveyor **104** is also coupled to the support arm **102** by a latch (not shown) at the bottom of the conveyor. The latch allows the conveyor **104** to be uncoupled from the support arm **102** at the bottom so that the conveyor is free to rotate about the coupling **103**. By positioning the coupling **103** at or near the center of gravity of the conveyor **104**, the conveyor **104** balances on the pivoting coupling **103** such that little effort is required to rotate the conveyor **104**.

The conveyor **104** includes a conveyor hopper **108** at its base, which is shown in the unloading position below the gravity discharge **110** of the main hopper **105**. At the other end of the conveyor **104** is the discharge **112**. Seed can be gravity feed from the main hopper **105** into the conveyor hopper **108**, which can then be moved to the discharge **112** of the conveyor **104** by an internal elevator (not shown). In one embodiment, the elevator is a motor-driven belt type elevator coupled onto rollers at both ends of the conveyor.

The seed carrier **100** may be transported by conventional means such as on a trailer. FIG. **2** illustrates the seed carrier **100** on a three axle trailer **200** according to an embodiment of the present invention. As shown, the conveyor **104** is in the unloading position.

FIG. **3** illustrates the seed carrier **100** in the loading position. As shown, the conveyor **104** is uncoupled from the support arm **102** at its base and rotated **180** degrees about pivot coupling **103** so that the conveyor hopper **108** is positioned at a convenient location away from the carrier while the discharge **112** of the conveyor **104** is located over the main hopper **105**. A stand **307** is provided for holding the conveyor hopper **108** in place. The stand **307** may be integrated with the conveyor **104**.

Accordingly, in the loading position, grain, seed or like can be feed into the conveyor hopper **108** to be moved to the discharge **112** for filling the main hopper **105**.

FIG. **4** is a view of the pivoting base of the support arm **102**. As shown, the support arm **102** can be pivotably coupled to a base **401** at a center point so that the support arm **102** is rotatable about a vertical axis. Wheels **403** provide support and can run along a track **402** to facilitate the support arm's **102** motion about the perimeter of the base **401**. The support arm **102** can be locked into a selected position of the base **401** by engaging a pin (not shown) with one of a plurality of the holes **407** distributed around the base **401**. The pin is disengaged with a hole by actuating a lever mechanism **404**, which lifts the pin out of a hole. The lever mechanism **404** may be spring actuated to bias the pin toward the holes, so that simply releasing the lever will allow the pin to engage with one of the holes **407**. Also shown, a hydraulic piston **405** is coupled with the support arm **102** for adjusting the height of the support arm **102**.

FIG. **5** is an alternative view of the support arm base. As shown, lever mechanism **404** includes a handle **504** coupled with a cross-bars **505** and **506**. Cross-bar **506** is coupled to cross-bar **505** on one end and to a plate **508** having a pin **509** on the other end, and with a pivoting coupling **502** at a point near the plate. Rotating the handle **504** applies a downward force to crossbar **506** causing it to rotate about the coupling **502** to raise the plate **508** to disengage the pin **509**. While disengaged, the base **401** is free to rotate about its vertical axis. Springs may be provided for biasing the pin **509** toward the holes **407** for engaging therewith, or the pin **509** can be engaged by gravity.

FIG. **6** is a side view of a seed carrier **100** according to an embodiment of the present invention. As shown in FIG. **6**, the conveyor **104** includes an elongated discharge spout **602** and is positioned in a transport position. Support members **604** may be mounted on or integral with the legs **106** for holding the conveyor **104** in a forward transport position as shown, or a rearward transport position. As shown, the carrier **100** is fixed to a dual axle trailer **606**.

FIG. **7** illustrates a basic belt driven conveyor according to an embodiment of the present invention. The conveyor **104** comprises a belt **702** that winds about a pair of rollers **704**. The rollers are positioned outside a tube section **706**, a first roller being positioned in the discharge **112** and a second roller being positioned below the conveyor hopper **108**. A motor (not shown) or other means for turning the rollers may be provided at either end of the conveyor. A void **707** exists below the rollers **704** to allow the belt **702** to travel on its return path.

FIG. **8** is a view of a conveyor belt according to an embodiment of the present invention. The discharge end of a conveyor is shown where a conveyor belt wraps around a motor driven roller **802**. The motor may be a hydraulic motor and therefore, hydraulic hoses **804** provide hydraulic fluid flow to and from the motor. Teeth **806** are provided to push grain or seed up the conveyor. As shown, the conveyor belt is cupped in the tube section but flattens out as it reaches the roller **802**. Channeling members (seals) **808** are provided on each side of the belt to form a seal and prevent grain or seed from falling off the edges of the belt as the belt begins to conform to the tubular portion of the conveyor **104**.

FIG. **9** is a front view of the belt as it travels over the roller **802**. Channeling members (seals) **902** are provided on each side of the belt to form a seal and prevent grain or seed from falling off the edges of the belt as the belt flattens at the roller. As shown, the channeling members **902** are fixed to the conveyor discharge **112** with bolts, but can be fixed by other means or can be integral with the discharge.

Discs **904** are provided at the rollers at the edge of the belt to provide additional channeling/sealing means. The discs **904** are preferably integral with the rollers or coupled therewith so that they may rotate.

FIG. **10** is a side view of the hopper end of the conveyor **104**. As shown, conveyor hopper **108** sits above in ingress to the conveyor **104**. When coupled to the support arm **102**, as shown, the conveyor hopper **108** is positioned below a discharge of the main hopper **106**. The discharge **110** may be opened by conventional means. As showed, a wheel handle mechanism **1004** is provided for opening the discharge doors **1006**.

The conveyor hopper **108** is preferably manufactured from light weight materials such as plastic, canvas, rubber or vinyl. As shown, the hopper **108** may include a mechanism for opening and closing the hopper. In this embodiment, flexible coupling or hinge is provided at one end **1008** of the hopper **108** and a mechanism **1010** is provided at the end of the hopper **108** and is coupled with the conveyor **104**, such that the hopper **108** may be made to have an appropriate fit with the discharge **110** of the main hopper **105**. A flap **1012** can be provided at the bottom of the discharge **110**.

FIG. **11** is a schematic view of the hopper end of the conveyor. As is shown, a brush seal **1101** can be located across the belt **702**. The brush seal **1101** retains the conveyed material within the hopper and does not allow the material to enter the void **707** (shown in FIG. **7**) under the roller. Such an arrangement is desirable because it prevents the conveyed material from being subjected to mechanical agitation, which would result in damage to the conveyed material. The brush seal **1101** allows the conveyor teeth **806** to pass, but not the conveyed material.

One will understand that hydraulic power can be provided by a towing vehicle, such as a tractor or the like or alternatively, hydraulic power can be provided on the tender and driving electrically from the towing vehicle, such as a truck.

Thus, a number of preferred embodiments have been fully described above with reference to the drawing figures. Although the invention has been described based upon these preferred embodiments, it would be apparent to those of skill in the art that certain modifications, variations, and alternative constructions could be made to the described embodiments within the spirit and scope of the invention.

We claim:

1. A seed or grain tender comprising:

a frame;

a main hopper mounted on said frame and having a main hopper discharge;

a base mounted below said main hopper discharge;

a support arm having first and second ends;

a first coupling connecting said first end of said support arm with said base, said first coupling being rotatable in relation to said base about a first vertical axis of rotation, and said first end of said support arm being rotatable in relation to said first coupling about a first horizontal axis of rotation;

a conveyor having a longitudinal axis and first and second ends, a conveyor hopper at said first end, a conveyor discharge at said second end, and an internal elevator for moving seed or grain from said conveyor hopper to said conveyor discharge; and

a second coupling connecting said second end of said support arm with said conveyor at an approximate center of gravity of said conveyor, said second coupling defining a second vertical axis of rotation that is not parallel to said conveyor longitudinal axis, and said conveyor being rotatable in relation to said second end of said support arm about said second vertical axis of rotation between an unloading position wherein said conveyor hopper is disposed below said main hopper discharge to receive agricultural product from said main hopper and a loading position wherein said conveyor discharge is disposed above said main hopper to dispense agricultural product into said main hopper.

2. The seed or grain tender of claim **1**, wherein said first vertical axis of rotation extends through said main hopper discharge.

3. The seed or grain tender of claim **1**, wherein said second vertical axis of rotation extends through said approximate center of gravity of said conveyor.

4. The seed or grain tender of claim **1**, wherein said first horizontal axis extends through said first end of said support arm.

5. The seed or grain tender of claim **1**, wherein said second end of said support arm terminates at or near said second coupling.

6. The seed or grain tender of claim **1**, further comprising a hydraulic piston extending at an acute angle relative to a horizontal plane to connect with a portion of said support arm spaced from said first horizontal axis of rotation.

7. The seed or grain tender of claim **1**, further comprising a stand coupled with said first end of said conveyor and movable between a stowed position allowing said conveyor hopper to be positioned below said main hopper discharge when said conveyor is in said unloading position and an extended position supporting said conveyor hopper above the ground when said conveyor is in said loading position.

8. A seed or grain tender comprising:

a frame;

a main hopper mounted on said frame and having a main hopper discharge;

a base positioned below said main hopper;

a support arm having first and second ends;

a first coupling connecting said first end of said support arm with said base, said first coupling being rotatable about a first vertical axis of rotation, and said first end of said support arm being rotatable about a first horizontal axis of rotation;

a conveyor having a longitudinal axis and first and second ends, a conveyor hopper at said first end, and a conveyor discharge at said second end; and

a second coupling connecting said second end of said support arm with said conveyor at an approximate center of gravity of said conveyor, said second coupling defining a second vertical axis of rotation that is not parallel to said conveyor longitudinal axis, and said conveyor being rotatable about said second vertical axis of rotation between an unloading position wherein said conveyor hopper is disposed below said main hopper discharge to receive agricultural product from said main hopper and a loading position wherein said conveyor discharge is disposed above said main hopper to dispense agricultural product into said main hopper.

9. The seed or grain tender of claim **8**, wherein said first vertical axis of rotation extends through said main hopper discharge.

10. The seed or grain tender of claim **8**, wherein said second vertical axis of rotation extends through said approximate center of gravity of said conveyor.

11. The seed or grain tender of claim **8**, wherein said first horizontal axis extends through said first end of said support arm.

12. The seed or grain tender of claim **8**, wherein said second end of said support arm terminates at or near said second coupling.

13. The seed or grain tender of claim **8**, wherein said conveyor includes an internal elevator for moving seed or grain from said conveyor hopper to said conveyor discharge.

14. The seed or grain tender of claim **8**, further comprising a hydraulic piston extending at an acute angle relative to a horizontal plane to connect with a portion of said support arm spaced from said first horizontal axis of rotation.

15. The seed or grain tender of claim **8**, further comprising a stand coupled with said first end of said conveyor and movable between a stowed position allowing said conveyor hopper to be positioned below said main hopper discharge when said conveyor is in said unloading position and an extended position supporting said conveyor hopper above the ground when said conveyor is in said loading position.

16. A seed or grain tender comprising:

a main hopper having a main hopper discharge;

a base positioned below said main hopper;

a support arm having first and second ends;

a first coupling connecting said first end of said support arm with said base, said first coupling being rotatable about a first vertical axis of rotation, and said first end of said support arm being rotatable about a first horizontal axis of rotation;

a conveyor having a longitudinal axis and first and second ends, a conveyor hopper at said first end, and a conveyor discharge at said second end; and

a second coupling connecting said second end of said support arm with said conveyor at an approximate center of gravity of said conveyor, said second coupling defining a first conveyor axis of rotation that is not parallel to said conveyor longitudinal axis, and said conveyor being

rotatable about said first conveyor axis of rotation between an unloading position wherein said conveyor hopper is disposed below said main hopper discharge to receive agricultural product from said main hopper and a loading position wherein said conveyor discharge is disposed above said main hopper to dispense agricultural product into said main hopper.

17. The seed or grain tender of claim **16**, wherein said first vertical axis of rotation extends through said main hopper discharge.

18. The seed or grain tender of claim **16**, wherein said first conveyor axis of rotation extends through said approximate center of gravity of said conveyor.

19. The seed or grain tender of claim **16**, wherein said first horizontal axis extends through said first end of said support arm.

20. The seed or grain tender of claim **16**, wherein said second end of said support arm terminates at or near said second coupling.

21. The seed or grain tender of claim **16**, wherein said conveyor includes an internal elevator for moving seed or grain from said conveyor hopper to said conveyor discharge.

22. The seed or grain tender of claim **16**, further comprising a hydraulic piston extending at an acute angle relative to a horizontal plane to connect with a portion of said support arm spaced from said first horizontal axis of rotation.

23. The seed or grain tender of claim **16**, further comprising a stand coupled with said first end of said conveyor and movable between a stowed position allowing said conveyor hopper to be positioned below said main hopper discharge when said conveyor is in said unloading position and an extended position supporting said conveyor hopper above the ground when said conveyor is in said loading position.

* * * * *

EXHIBIT 2

US009745123B2

(12) **United States Patent**
Petersen et al.

(10) **Patent No.: US 9,745,123 B2**
(45) **Date of Patent: Aug. 29, 2017**

(54) **SEED CARRIER WITH PIVOTING CONVEYOR**

(71) Applicant: **UNVERFERTH MANUFACTURING COMPANY, INC.**, Kalida, OH (US)

(72) Inventors: **Brian James Petersen**, Ottawa, OH (US); **David Richard Smith**, Fort Jennings, OH (US)

(73) Assignee: **UNVERFERTH MANUFACTURING COMPANY, INC.**, Kalida, OH (US)

(*) Notice: Subject to any disclaimer, the term of this patent is extended or adjusted under 35 U.S.C. 154(b) by 305 days.

(21) Appl. No.: **14/606,794**

(22) Filed: **Jan. 27, 2015**

(65) **Prior Publication Data**

US 2015/0197395 A1 Jul. 16, 2015

Related U.S. Application Data

(63) Continuation of application No. 13/541,553, filed on Jul. 3, 2012, now Pat. No. 8,967,940, which is a

(Continued)

(51) **Int. Cl.**
B65F 1/00 (2006.01)
B65D 88/54 (2006.01)

(Continued)

(52) **U.S. Cl.**
CPC ***B65D 88/54*** (2013.01); ***A01C 15/003*** (2013.01); ***A01C 15/006*** (2013.01); ***B60P 1/36*** (2013.01);

(Continued)

(58) **Field of Classification Search**
CPC B60P 1/00; B60P 1/36; B60P 1/42

(Continued)

(56) **References Cited**

U.S. PATENT DOCUMENTS

427,736 A 5/1890 Bufkin 198/317
1,905,434 A 4/1933 Boyer 414/328

(Continued)

FOREIGN PATENT DOCUMENTS

CA 2416677 A1 8/2004
FR 2465667 A1 3/1981

OTHER PUBLICATIONS

Model 2300 Air System and the Model 4800 Air Drill, both made and sold by Concord, as illustrated in the Concord brochure, 12 pages.

(Continued)

Primary Examiner — Saul Rodriguez
Assistant Examiner — Willie Berry, Jr.
(74) *Attorney, Agent, or Firm* — Rothwell, Figg, Ernst & Manbeck, P.C.

(57) **ABSTRACT**

A seed carrier includes a main hopper coupled with a frame via leg members. The main hopper has a discharge. A base plate is coupled with the frame. A support arm is rotatably coupled with the base plate at a first end. A belt driven conveyor having a conveyor hopper at a first end and a discharge at a second end is rotatably coupled with a second end of the support arm at an approximate center of gravity thereof. A latch mechanism is provided for detachably coupling the first end of the conveyor with the first end of the support arm such that the conveyor hopper is position below the main hopper discharge. When the conveyor is uncoupled from the first end of the support arm, the conveyor can rotate to a loading position wherein the discharge thereof can be positioned over the main hopper.

21 Claims, 11 Drawing Sheets

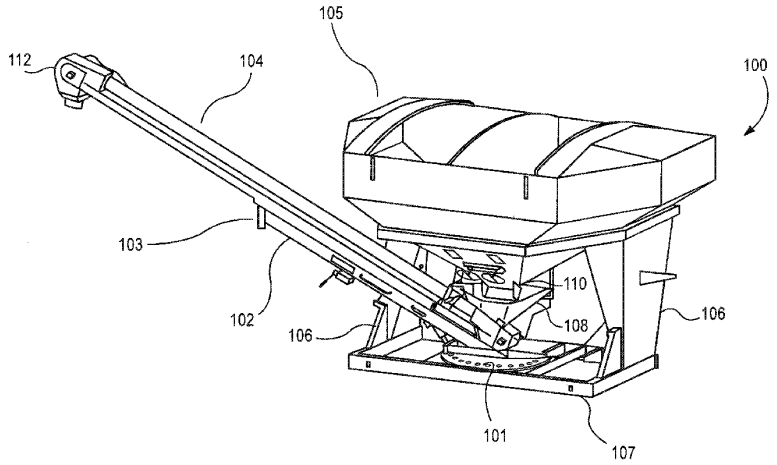

Related U.S. Application Data

continuation of application No. 12/031,867, filed on Feb. 15, 2008, now Pat. No. 8,221,047.

(60) Provisional application No. 60/901,321, filed on Feb. 15, 2007.

(51) **Int. Cl.**

A01C 15/00	(2006.01)
B60P 1/36	(2006.01)
B65G 65/32	(2006.01)
B65G 65/40	(2006.01)
B65G 65/42	(2006.01)
B60P 1/00	(2006.01)

(52) **U.S. Cl.**
CPC ***B65G 65/32*** (2013.01); ***B65G 65/40*** (2013.01); ***B65G 65/42*** (2013.01); *B60P 1/00* (2013.01)

(58) **Field of Classification Search**
USPC 414/523; 111/11; 198/312, 315, 316, 198/317, 318
See application file for complete search history.

(56) **References Cited**

U.S. PATENT DOCUMENTS

3,090,515	A	5/1963	Crowther	
3,493,136	A	2/1970	Spellman, Jr.	
3,498,483	A	3/1970	Meharry	414/523
3,968,771	A	7/1976	Walgenbach et al.	118/303
3,994,512	A	11/1976	Parker et al.	280/687
3,997,215	A	12/1976	Parker et al.	298/24
4,037,745	A	7/1977	Hengen et al.	
4,218,169	A	8/1980	Arends	
4,274,790	A	6/1981	Barker	
4,312,621	A	1/1982	Quanbeck et al.	
4,411,581	A	10/1983	Niewold	
4,419,037	A	12/1983	Niewold	
4,491,216	A	1/1985	Sawby	
4,503,803	A	3/1985	Barnes	118/303
4,613,275	A	9/1986	Karlowsky	
4,742,938	A	5/1988	Niewold	
5,013,208	A	5/1991	Grieshop	
5,468,113	A	11/1995	Davis	
5,484,249	A	1/1996	Klatt	414/523
5,516,253	A	5/1996	Linscheid et al.	
5,520,495	A	5/1996	Sukup	414/523
5,529,455	A	6/1996	Kaster et al.	
5,538,388	A	7/1996	Bergkamp et al.	
5,582,221	A	12/1996	Smith et al.	
5,615,990	A	4/1997	Grieshop	414/526
5,718,556	A	2/1998	Forsyth	414/503
5,785,481	A	7/1998	Ockels	
5,800,116	A	9/1998	Smith et al.	414/523
5,888,044	A *	3/1999	Baskerville	B60P 1/42 198/311
5,980,189	A	11/1999	Rubner	
6,113,339	A	9/2000	Adams	
6,120,233	A	9/2000	Adam	414/502
6,209,880	B1	4/2001	Turnwald et al.	277/402
6,325,588	B1	12/2001	Nolin	414/526
6,604,620	B2	8/2003	Dennis	198/312
6,767,174	B2	7/2004	Cresswell	414/523
6,908,380	B2	6/2005	Silver	
7,223,059	B2	5/2007	Smith et al.	
7,267,519	B2	9/2007	Cresswell et al.	
7,393,275	B2	7/2008	Voss et al.	
7,428,956	B2	9/2008	Scherman	198/312
7,488,149	B2	2/2009	Waldner	414/532
7,500,814	B2	3/2009	Meyer	
7,500,817	B2 *	3/2009	Furrer	A01C 15/003 198/311
7,553,228	B2	6/2009	Dillon	
8,221,047	B2	7/2012	Petersen et al.	414/523
2003/0057055	A1	3/2003	Haukaas et al.	198/313
2006/0180062	A1	8/2006	Furrer et al.	
2009/0110524	A1	4/2009	Hoffmann	414/507

OTHER PUBLICATIONS

Convey-All, BTS 290 Seed Tender Product Specification, 2 pages.
Convey-All Ind. Inc., Engineering Drawings of BT-1500, 4 pages.
Par-Kan Company, Engineering Drawings, 2 pages.
Great Plains Manufacturing, Inc., Parts Manual—Model ADC2220 Air Drill Cart, May 1, 1997, 61 pages.
Great Plains Manufacturing, Inc., Parts Manual—Model ADC2220 Air Drill Cart, Mar. 1, 2000, 69 pages.
Reexamination File History for Control No. 95000691, 374 pages.
Order Denying Request for Inter Partes Reexamination for Control No. 95000691, Nov. 7, 2012, 15 pages.
Par-Kan Company, Final Invalidity Contentions submitted in *Unverferth Mfg. Co., Inc.* v. *Par-Kan Co.,* Civil Action No. 13-cv-00097 (N.D. Ind.), Oct. 25, 2013, 130 pages.
Par-Kan Company, Preliminary Invalidity Contentions submitted in *Unverferth Mfg. Co., Inc.* v. *Par-Kan Co.,* Civil Action No. 13-cv-00097 (N.D. Ind.), Jun. 17, 2013, 169 pages.
Declaration of Shawn Gerdeman with Exhibits A-E dated Sep. 18, 2014, 24 pages.
Hiniker Company, Model 4836 Air Seeder Cart with 4800 Air Drill Front Folding Toolbar, Operator's Manual, Jan. 1999, 58 pages.
Hiniker Company, Models 4831, 4832, and 4833 Air Seeder Cart with 4800 Air Seeder Front Folding Toolbar, Assembly Manual, Jan. 2000, 49 pages.
Hiniker 4831, 4832, 4833 Air Seeder, Jul. 21, 1999, 1 page.
Hiniker Company, Fill Auger Support Assembly, 1 page.
Hiniker Company, 4800 Soybean Planter Marketing Material, 6 pages.
Hiniker Company, Product Photographs, 67 pages.
J&M Manufacturing Company, Inc., Annotated Photographs of Hiniker Company 4836 Air Seed Cart, 8 pages.
Great Plains Manufacturing, 220 Bushel Air Cart, 2 pages.
J&M Manufacturing Company, Inc., J&M Mfg. Co., Inc.'s Amended Initial Invalidity Contentions submitted in *Unverferth Mfg. Co., Inc.* v. *J&M Mfg. Co., Inc.,* Civil Action No. 3:16-cv-02282-JZ (N.D. Ohio), Feb. 7, 2017, 59 pages.

* cited by examiner

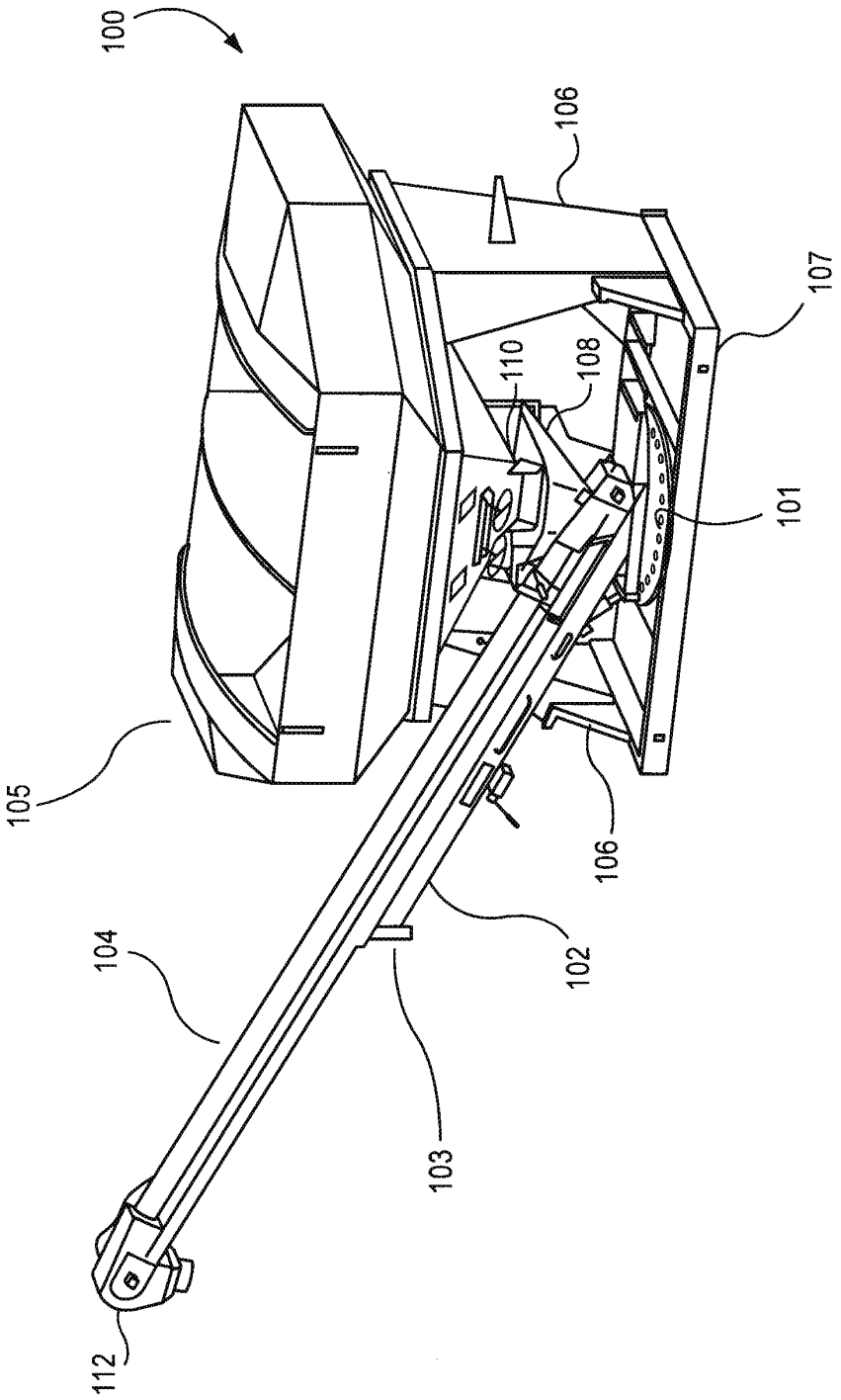

FIG.1

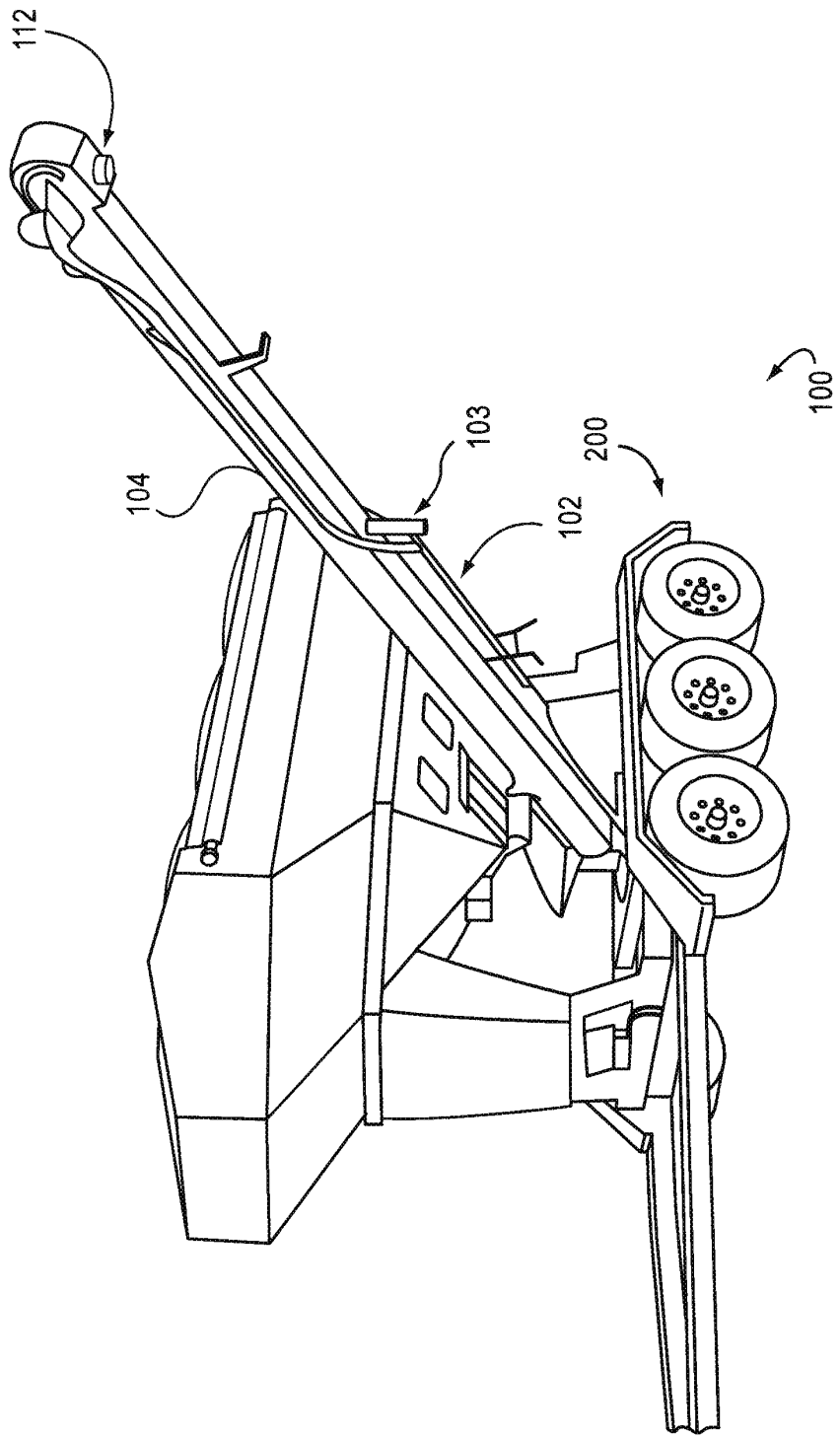

FIG.2

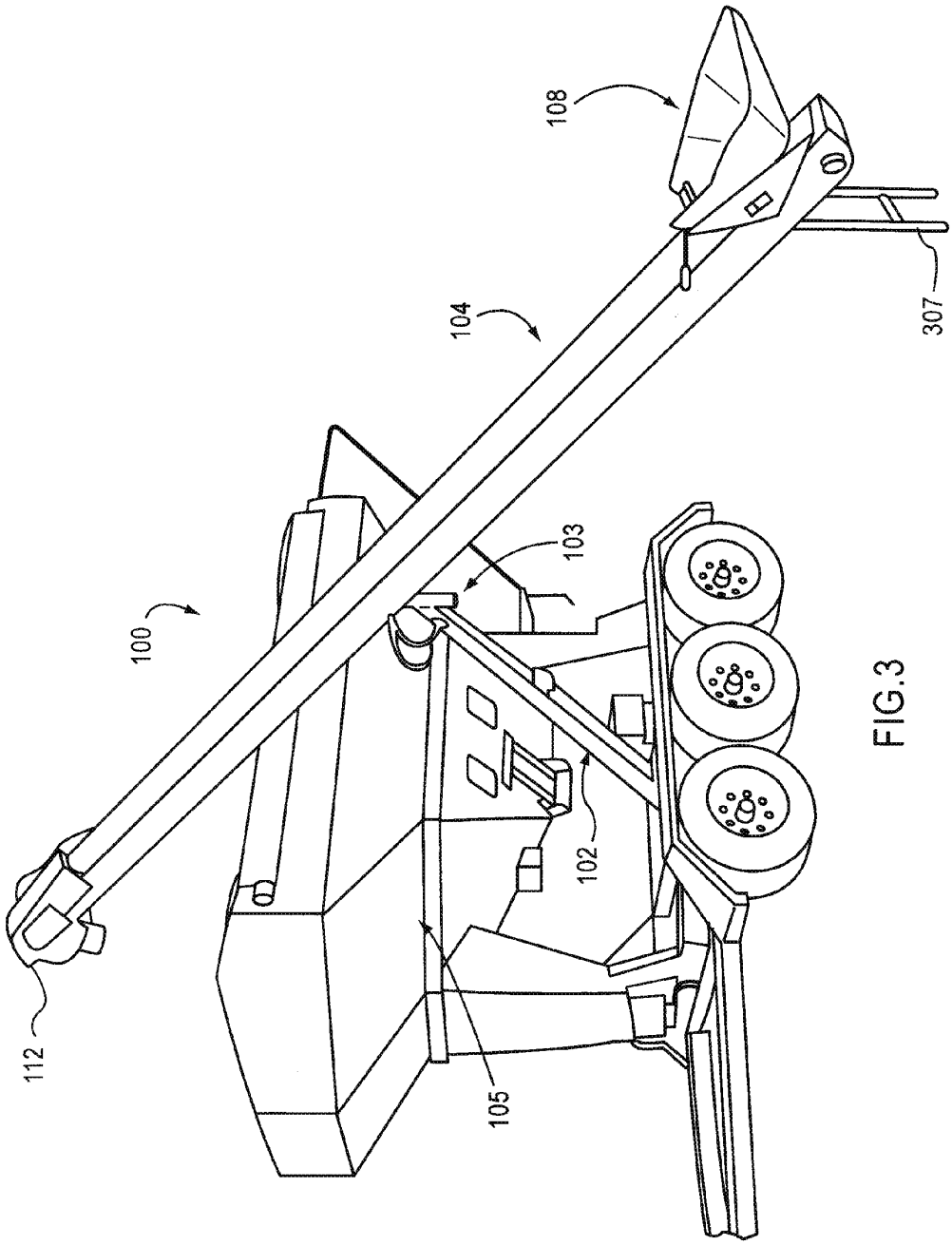

FIG.3

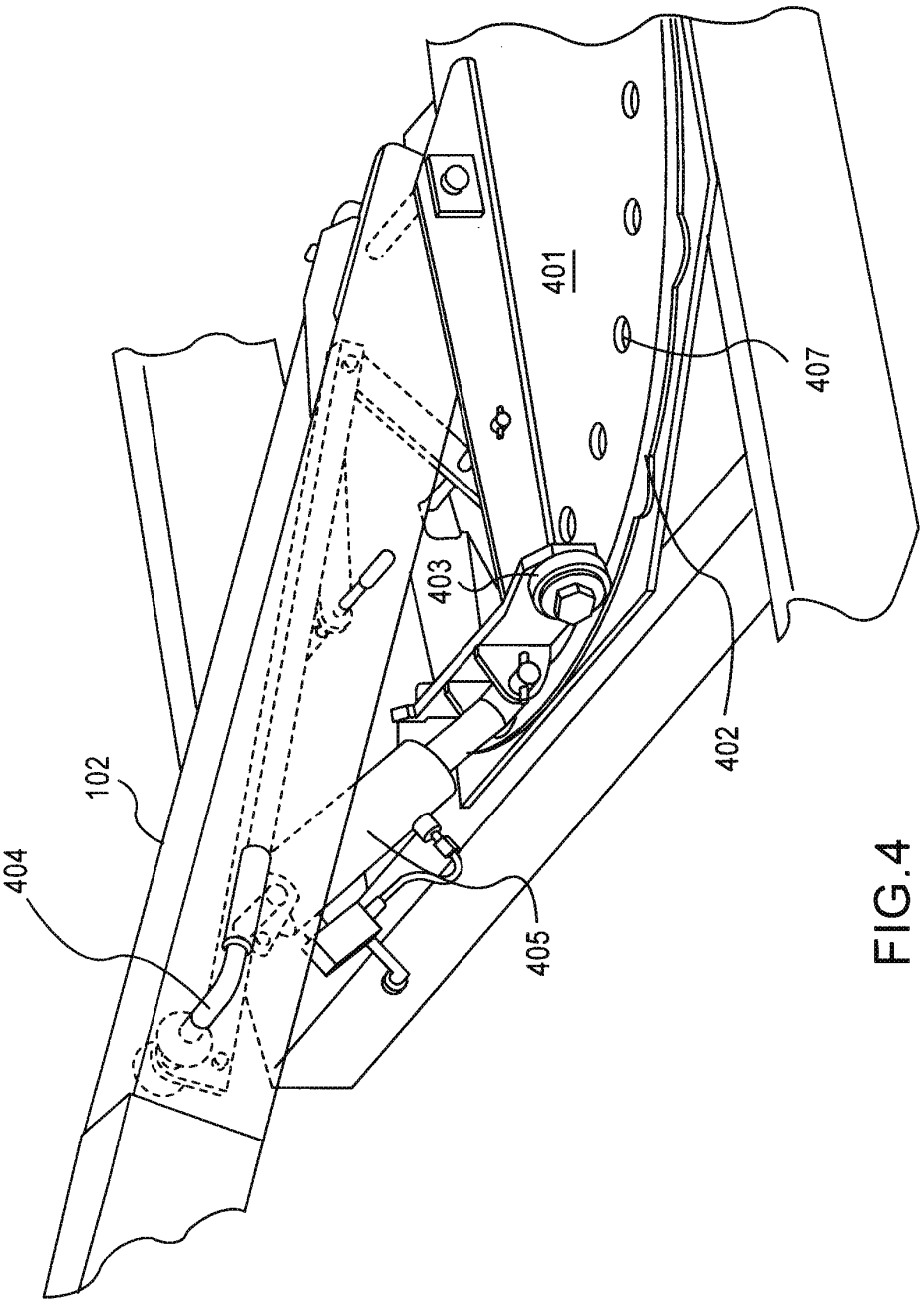

FIG.4

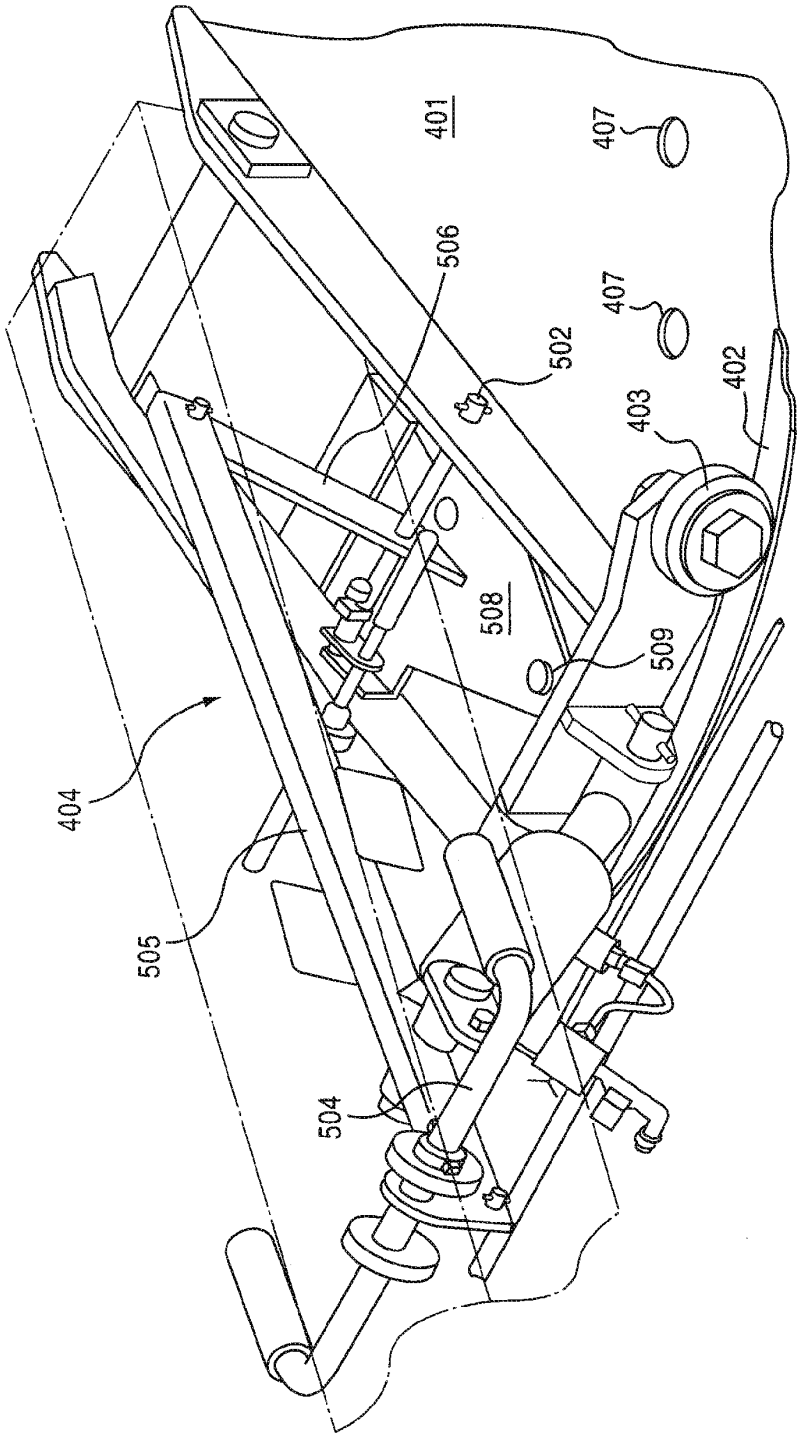

FIG.5

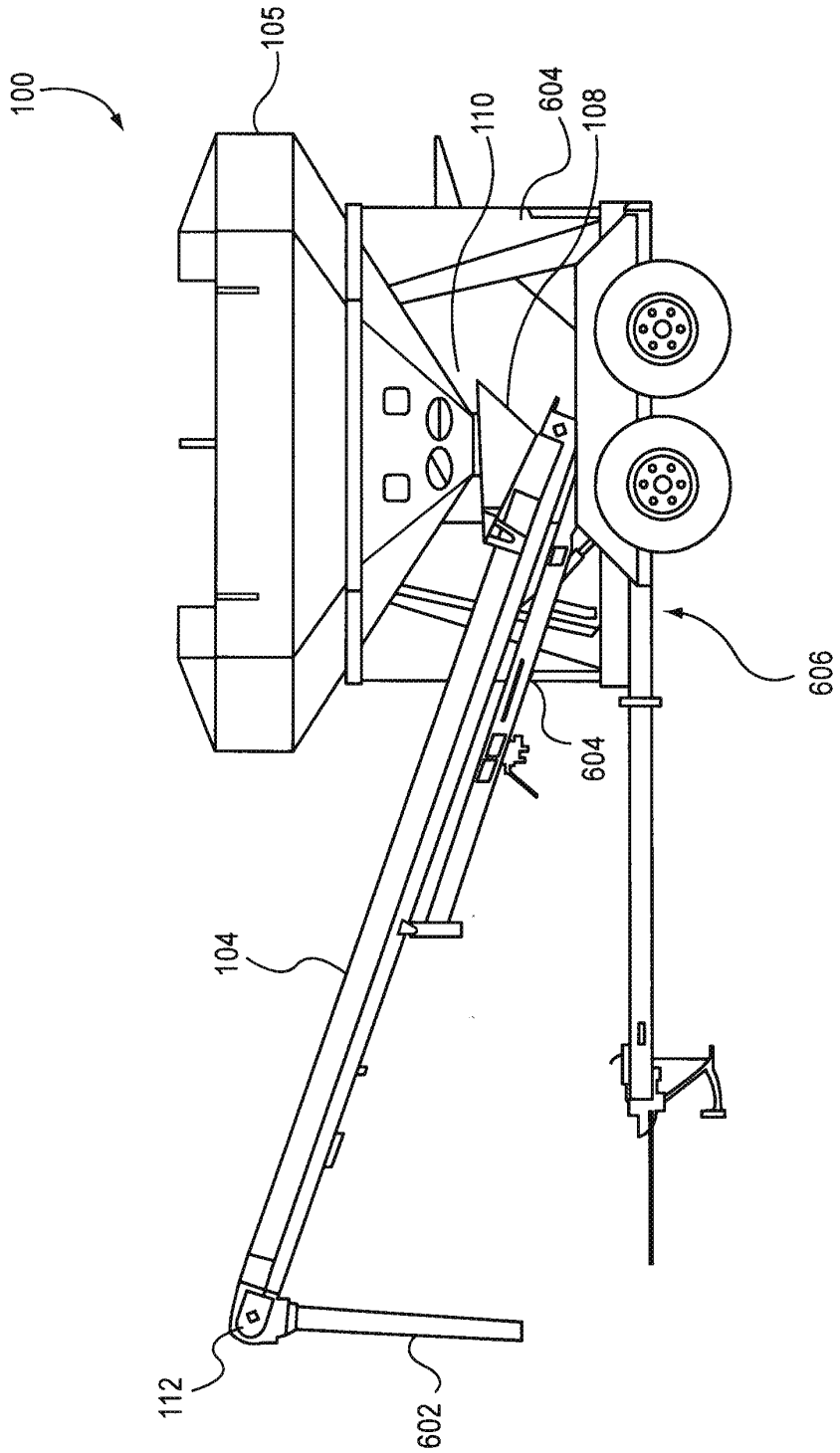

FIG.6

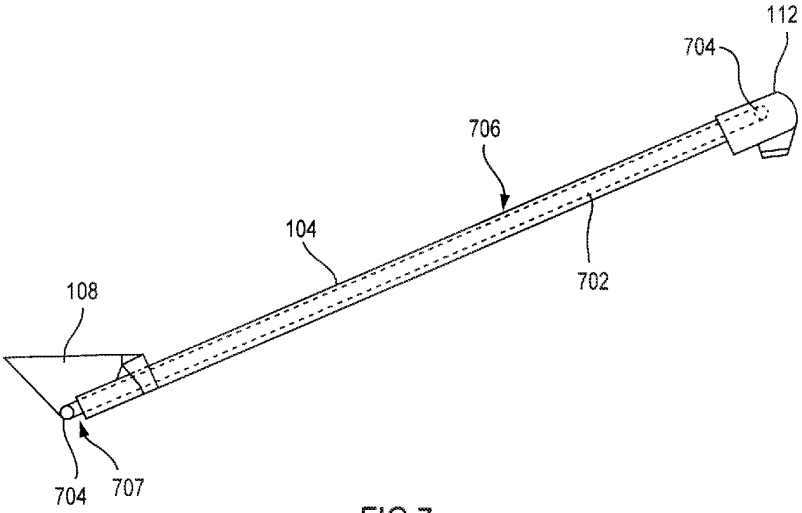

FIG.7

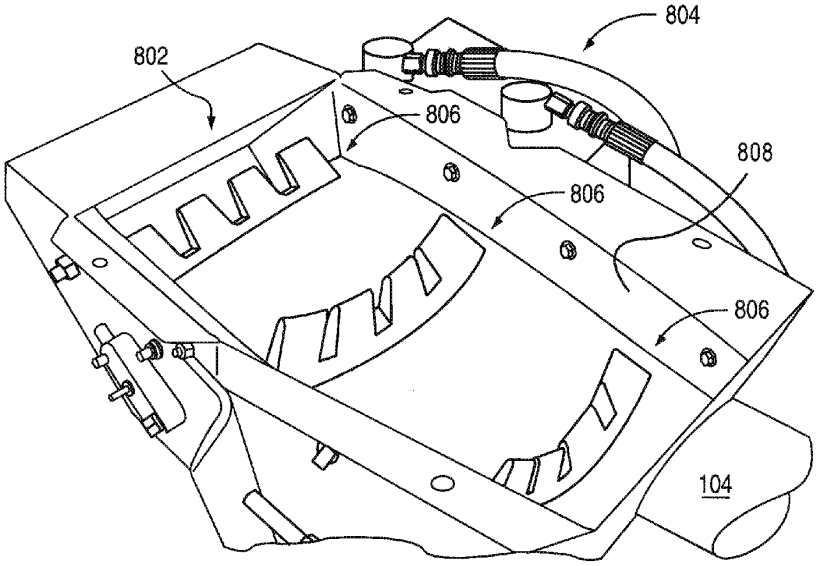

FIG.8

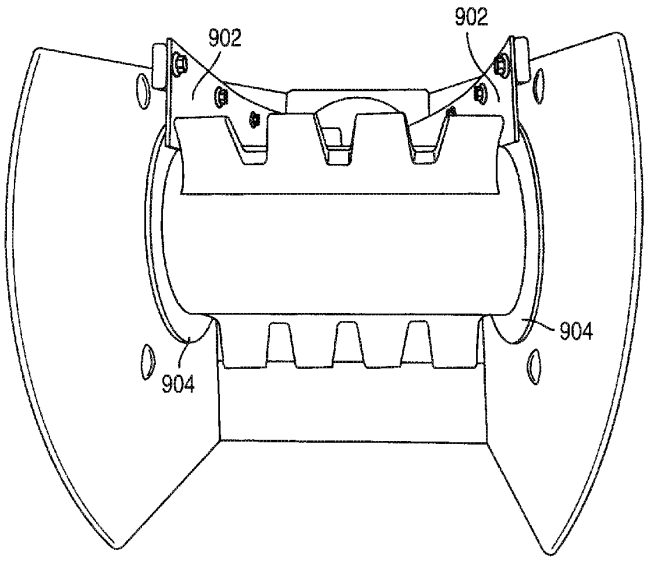

FIG.9

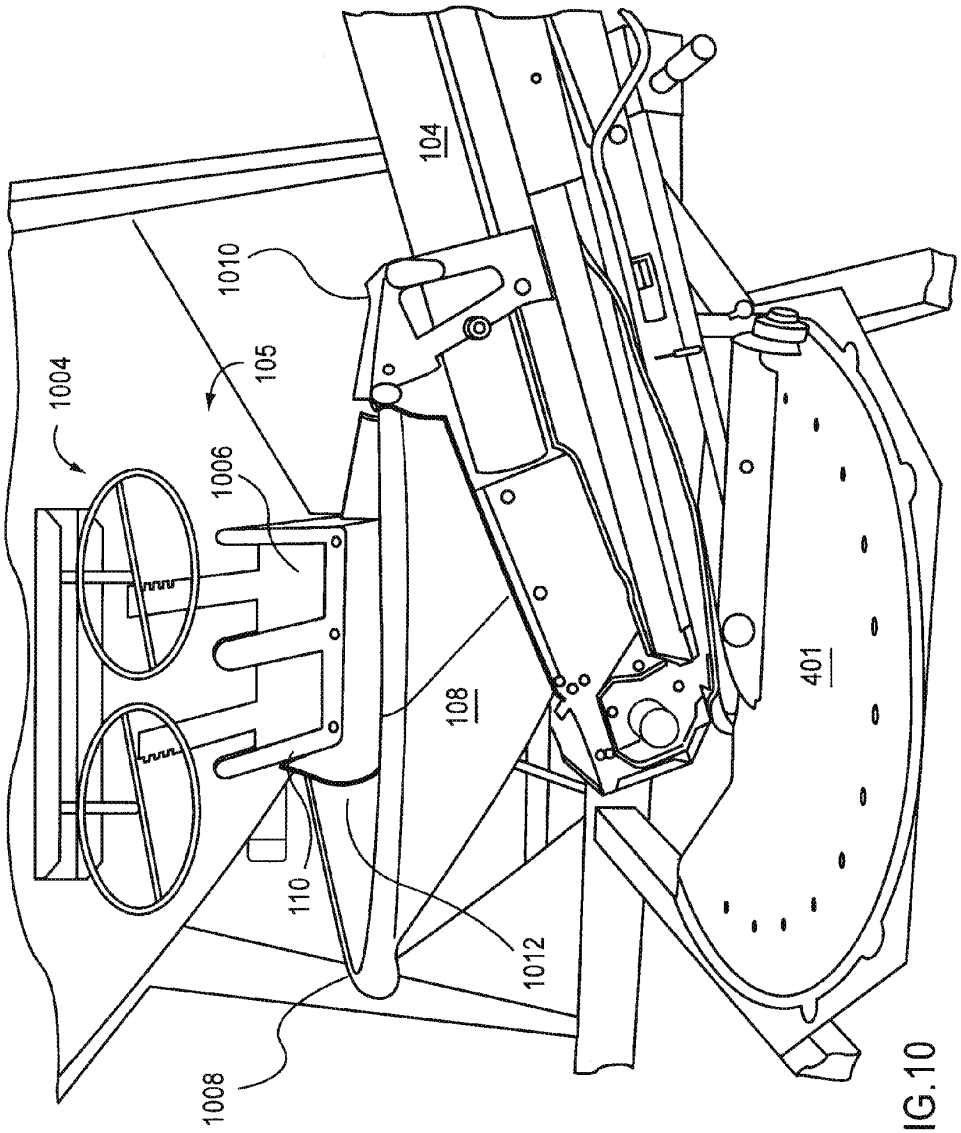

FIG.10

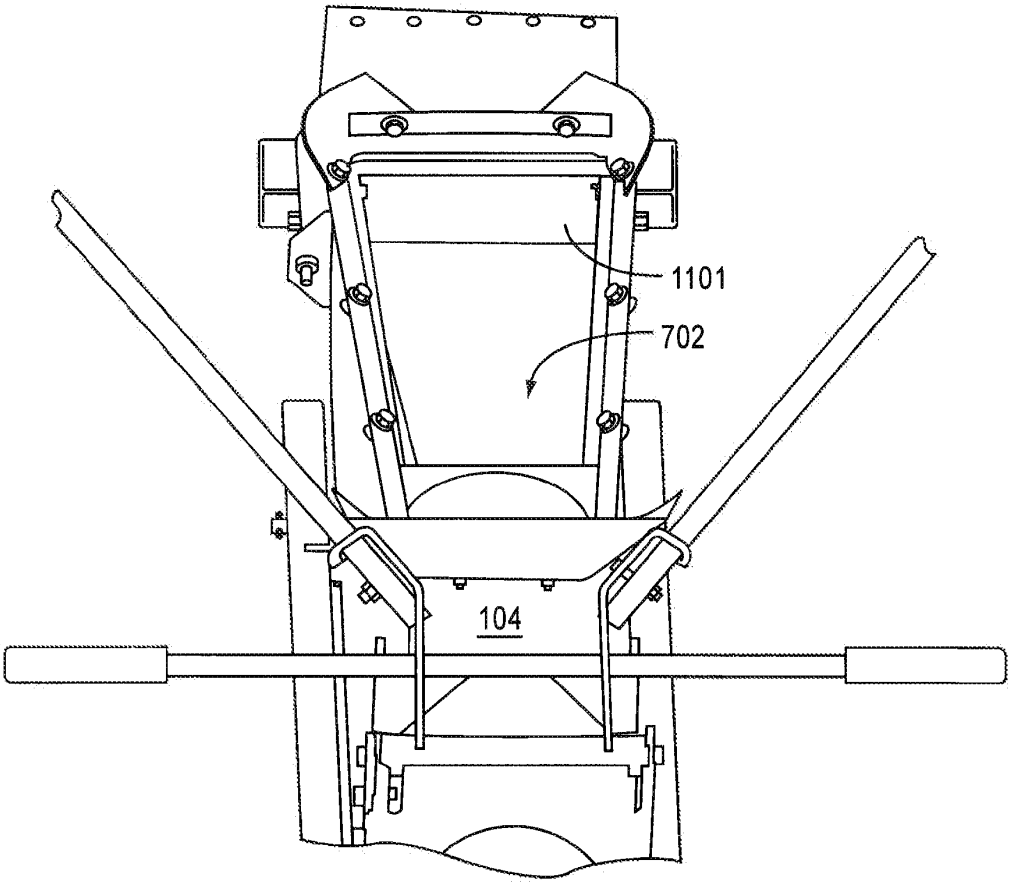

FIG.11

SEED CARRIER WITH PIVOTING CONVEYOR

CROSS-REFERENCE TO RELATED APPLICATIONS

The present application is a Continuation of U.S. application Ser. No. 13/541,553, filed Jul. 3, 2012, which claims priority to U.S. application Ser. No. 12/031,867, filed Feb. 15, 2008, now U.S. Pat. No. 8,221,047, which claims priority to Provisional Patent Application Ser. No. 60/901,321 filed on Feb. 15, 2007, the entire disclosures of which are incorporated herein by reference.

BACKGROUND OF THE INVENTION

Field of the Invention

The present invention relates generally to a conveyor system for a grain or seed carrier. The conveyor system includes a novel pivot system that allows it to either load or unload a container by pivoting it into a loading or unloading position.

Description of the Related Art

Conveyor systems for moving grain, seed, etc. are well known. Auger systems are used to rapidly move grain such as feed or the like, while belt driven conveyors are often used for moving more expensive payload, such as seed.

One belt driven conveyor system includes a generally flat belt constructed from a flexible, sturdy material such as rubber or nylon. The conveyor is housed in a tube with rollers on both ends so that the belt may rotate in order to transmit material from one end to the other. Such conveyors are used for unloading seed carriers or the like. However, current conveyors have several problems.

First, current conveyors have the problem that the material being moved can be damaged by the rollers. Second, current conveyors do not have a full range of motion as implemented in seed carries. Third, current conveyors are only implemented for unloading.

There is a need for new and improved conveyor systems that allow a wagon to be unloaded and loaded using a single mechanism.

SUMMARY OF THE INVENTION

According to an embodiment of the present invention, a seed tender or carrier is provided that includes a main hopper for holding seed and a conveyor for transferring seed to and from the main hopper.

According to an embodiment of the present invention, in an unloading position, one end of the conveyor may be positioned under the discharge of the main hopper and coupled with a pivoting support arm. In the unload position, the conveyor can be used to transfer seed from the main hopper to another location, such as to a planter, seeding unit, or the like. A pivot mechanism allows the conveyor to be rotated from under the box into a loading position in which the conveyor intake can rest on the ground or on a stand while the conveyor discharge is positioned to allow conveyed material to be discharged into the main hopper. In this loading position, the conveyor can be used to fill the main hopper.

According to an embodiment of the present invention, a conveyor hopper is provided on the intake side of the conveyor.

According to an embodiment of the present invention, the pivot mechanism allows the conveyor to swing from side to side to simplify unloading of the main hopper and the filling of planters, etc. The pivot mechanism can include a hydraulic cylinder that adjusts the vertical height of the conveyor discharge relative for different filling applications.

According to an embodiment of the present invention, a pivot single pivot point can be provided at one end of the support arm to allow the conveyor to be rotated between the loading and unloading position. The conveyor may be balanced on the pivot point at a location near or at the center of gravity, thereby permitting the conveyor to be rotated with minimal effort on the part of the operator.

According to an embodiment of the present invention, the conveyor can be rotated through at least 180 degrees about a vertical axis and so that it may be positioned in either a forward or rearward transport position. This feature enables the tender to be pulled by different vehicles such as by a pick-up truck with the conveyor forward or by a grain truck with the conveyor rearward.

Further applications and advantages of various aspects and embodiments of the present invention are discussed below with reference to the drawing figures.

BRIEF DESCRIPTION OF THE DRAWINGS

FIG. **1** illustrates a seed carrier according to an embodiment of the present invention.

FIG. **2** is a view of a seed carrier in an unloading position according to an embodiment of the present invention.

FIG. **3** is a view of a seed carrier in a loading position according to an embodiment of the present invention.

FIG. **4** is a view of a base system for the seed carrier according to an embodiment of the present invention.

FIG. **5** is a view of a lever mechanism for the base system according to an embodiment of the present invention.

FIG. **6** is a view of a seed carrier in a transport position according to an embodiment of the present invention.

FIG. **7** is a view of a belt conveyor for the seed carrier according to an embodiment of the present invention.

FIG. **8** is a view of the discharge end of a conveyor according to an embodiment of the present invention.

FIG. **9** is a forward view of a conveyor belt wrapping around a roller according to an embodiment of the present invention.

FIG. **10** is a view of the conveyor hopper in an unloading position according to an embodiment of the present invention.

FIG. **11** illustrates the receiving end of the conveyor according to one embodiment of the present invention.

DETAILED DESCRIPTION OF THE PREFERRED EMBODIMENTS

While the present invention may be embodied in many different forms, a number of illustrative embodiments are described herein with the understanding that the present disclosure is to be considered as providing examples of the principles of the invention and such examples are not intended to limit the invention to preferred embodiments described herein and/or illustrated herein.

In embodiments of the present invention, the novel conveyor pivot system can be implemented with seed carrier or seeding machines. The following section describes non-limiting examples of illustrative seeding equipment according to embodiments of the present invention. It should be appreciated that the following examples are provided for illustration and the present invention is not intended to be limited to the embodiments described herein.

FIG. **1** is a diagram depicting a seed carrier having a tube conveyor according to an embodiment of the present invention. The seed carrier **100** includes a main hopper **105** coupled to a frame **107** by legs **106**. A conveyor **104** is supported by a support arm **102** coupled with a pivoting mechanism **101** fixed to the frame **107**. The conveyor **104** is pivotably coupled with the support arm by a coupling **103** at a point that is preferably near or at the center of gravity of the conveyor **104**. The conveyor **104** is also coupled to the support arm **102** by a latch (not shown) at the bottom of the conveyor. The latch allows the conveyor **104** to be uncoupled from the support arm **102** at the bottom so that the conveyor is free to rotate about the coupling **103**. By positioning the coupling **103** at or near the center of gravity of the conveyor **104**, the conveyor **104** balances on the pivoting coupling **103** such that little effort is required to rotate the conveyor **104**.

The conveyor **104** includes a conveyor hopper **108** at its base, which is shown in the unloading position below the gravity discharge **110** of the main hopper **105**. At the other end of the conveyor **104** is the discharge **112**. Seed can be gravity feed from the main hopper **105** into the conveyor hopper **108**, which can then be moved to the discharge **112** of the conveyor **104** by an internal elevator (not shown). In one embodiment, the elevator is a motor-driven belt type elevator coupled onto rollers at both ends of the conveyor.

The seed carrier **100** may be transported by conventional means such as on a trailer. FIG. **2** illustrates the seed carrier **100** on a three axle trailer **200** according to an embodiment of the present invention. As shown, the conveyor **104** is in the unloading position.

FIG. **3** illustrates the seed carrier **100** in the loading position. As shown, the conveyor **104** is uncoupled from the support arm **102** at its base and rotated 180 degrees about pivot coupling **103** so that the conveyor hopper **108** is positioned at a convenient location away from the carrier while the discharge **112** of the conveyor **104** is located over the main hopper **105**. A stand **307** is provided for holding the conveyor hopper **108** in place. The stand **307** may be integrated with the conveyor **104**.

Accordingly, in the loading position, grain, seed or like can be feed into the conveyor hopper **108** to be moved to the discharge **112** for filling the main hopper **105**.

FIG. **4** is a view of the pivoting base of the support arm **102**. As shown, the support arm **102** can be pivotably coupled to a base **401** at a center point so that the support arm **102** is rotatable about a vertical axis. Wheels **403** provide support and can run along a track **402** to facilitate the support arm's **102** motion about the perimeter of the base **401**. The support arm **102** can be locked into a selected position of the base **401** by engaging a pin (not shown) with one of a plurality of the holes **407** distributed around the base **401**. The pin is disengaged with a hole by actuating a lever mechanism **404**, which lifts the pin out of a hole. The lever mechanism **404** may be spring actuated to bias the pin toward the holes, so that simply releasing the lever will allow the pin to engage with one of the holes **407**. Also shown, a hydraulic piston **405** is coupled with the support arm **102** for adjusting the height of the support arm **102**.

FIG. **5** is an alternative view of the support arm base. As shown, lever mechanism **404** includes a handle **504** coupled with a cross-bars **505** and **506**. Cross-bar **506** is coupled to cross-bar **505** on one end and to a plate **508** having a pin **509** on the other end, and with a pivoting coupling **502** at a point near the plate. Rotating the handle **504** applies a downward force to crossbar **506** causing it to rotate about the coupling **502** to raise the plate **508** to disengage the pin **509**. While disengaged, the base **401** is free to rotate about its vertical axis. Springs may be provided for biasing the pin **509** toward the holes **407** for engaging therewith, or the pin **509** can be engaged by gravity.

FIG. **6** is a side view of a seed carrier **100** according to an embodiment of the present invention. As shown in FIG. **6**, the conveyor **104** includes an elongated discharge spout **602** and is positioned in a transport position. Support members **604** may be mounted on or integral with the legs **106** for holding the conveyor **104** in a forward transport position as shown, or a rearward transport position. As shown, the carrier **100** is fixed to a dual axle trailer **606**.

FIG. **7** illustrates a basic belt driven conveyor according to an embodiment of the present invention. The conveyor **104** comprises a belt **702** that winds about a pair of rollers **704**. The rollers are positioned outside a tube section **706**, a first roller being positioned in the discharge **112** and a second roller being positioned below the conveyor hopper **108**. A motor (not shown) or other means for turning the rollers may be provided at either end of the conveyor. A void **707** exists below the rollers **704** to allow the belt **702** to travel on its return path.

FIG. **8** is a view of a conveyor belt according to an embodiment of the present invention. The discharge end of a conveyor is shown where a conveyor belt wraps around a motor driven roller **802**. The motor may be a hydraulic motor and therefore, hydraulic hoses **804** provide hydraulic fluid flow to and from the motor. Teeth **806** are provided to push grain or seed up the conveyor. As shown, the conveyor belt is cupped in the tube section but flattens out as it reaches the roller **802**. Channeling members (seals) **808** are provided on each side of the belt to form a seal and prevent grain or seed from falling off the edges of the belt as the belt begins to conform to the tubular portion of the conveyor **104**.

FIG. **9** is a front view of the belt as it travels over the roller **802**. Channeling members (seals) **902** are provided on each side of the belt to form a seal and prevent grain or seed from falling off the edges of the belt as the belt flattens at the roller. As shown, the channeling members **902** are fixed to the conveyor discharge **112** with bolts, but can be fixed by other means or can be integral with the discharge.

Discs **904** are provided at the rollers at the edge of the belt to provide additional channeling/sealing means. The discs **904** are preferably integral with the rollers or coupled therewith so that they may rotate.

FIG. **10** is a side view of the hopper end of the conveyor **104**. As shown, conveyor hopper **108** sits above in ingress to the conveyor **104**. When coupled to the support arm **102**, as shown, the conveyor hopper **108** is positioned below a discharge of the main hopper **106**. The discharge **110** may be opened by conventional means. As showed, a wheel handle mechanism **1004** is provided for opening the discharge doors **1006**.

The conveyor hopper **108** is preferably manufactured from light weight materials such as plastic, canvas, rubber or vinyl. As shown, the hopper **108** may include a mechanism for opening and closing the hopper. In this embodiment, flexible coupling or hinge is provided at one end **1008** of the hopper **108** and a mechanism **1010** is provided at the end of the hopper **108** and is coupled with the conveyor **104**, such that the hopper **108** may be made to have an appropriate fit with the discharge **110** of the main hopper **105**. A flap **1012** can be provided at the bottom of the discharge **110**.

FIG. **11** is a schematic view of the hopper end of the conveyor. As is shown, a brush seal **1101** can be located across the belt **702**. The brush seal **1101** retains the conveyed material within the hopper and does not allow the material

to enter the void **707** (shown in FIG. **7**) under the roller. Such an arrangement is desirable because it prevents the conveyed material from being subjected to mechanical agitation, which would result in damage to the conveyed material. The brush seal **1101** allows the conveyor teeth **806** to pass, but not the conveyed material.

One will understand that hydraulic power can be provided by a towing vehicle, such as a tractor or the like or alternatively, hydraulic power can be provided on the tender and driving electrically from the towing vehicle, such as a truck.

Thus, a number of preferred embodiments have been fully described above with reference to the drawing figures. Although the invention has been described based upon these preferred embodiments, it would be apparent to those of skill in the art that certain modifications, variations, and alternative constructions could be made to the described embodiments within the spirit and scope of the invention.

We claim:

1. A seed or grain tender comprising:

a main hopper having a main hopper discharge;

a support arm having first and second ends;

said first end of said support arm being located below said main hopper and being rotatable about a first axis of rotation, and said first end of said support arm being rotatable about a second axis of rotation that is perpendicular to said first axis of rotation;

a conveyor having a longitudinal axis and first and second ends, a conveyor hopper at said first end, a conveyor discharge at said second end, and an internal elevator for moving seed or grain from said conveyor hopper to said conveyor discharge;

said second end of said support arm being coupled with said conveyor between said first and second ends of said conveyor, said conveyor being rotatable about a third axis of rotation at said second end of said support arm that is not parallel to said conveyor longitudinal axis, and said conveyor being rotatable in relation to said second end of said support arm about said third of axis of rotation between an unloading position wherein said conveyor hopper is disposed below said main hopper discharge to receive agricultural product from said main hopper and a loading position wherein said conveyor discharge is disposed above said main hopper to dispense agricultural product into said main hopper, and

a hydraulic piston extending at an acute angle relative to a horizontal plane to connect with a portion of said support arm spaced from said second axis of rotation.

2. The seed or grain tender of claim **1**, wherein said first axis of rotation extends through said main hopper discharge.

3. The seed or grain tender of claim **1**, wherein said second axis of rotation extends through said first end of said support arm.

4. The seed or grain tender of claim **1**, wherein said third axis of rotation extends through said conveyor.

5. The seed or grain tender of claim **1**, wherein said third axis of rotation extends through said second end of said support arm.

6. The seed or grain tender of claim **1**, wherein said third axis of rotation extends through said conveyor and said second end of said support arm.

7. The seed or grain tender of claim **1**, wherein said third axis of rotation is oriented at an angle having a vertical component.

8. The seed or grain tender of claim **1**, wherein said second end of said support arm is coupled with said conveyor at or near said approximate center of gravity of said conveyor.

9. The seed or grain tender of claim **1**, further comprising a stand coupled with said first end of said conveyor and movable between a stowed position allowing said conveyor hopper to be positioned below said main hopper discharge when said conveyor is in said unloading position and an extended position supporting said conveyor hopper above the ground when said conveyor is in said loading position.

10. A seed or grain tender comprising:

a main hopper having an upper portion with a main hopper intake opening and a lower portion with a main hopper discharge;

a support arm having a first end proximate said lower portion of said main hopper and a second end;

wherein said support arm is pivotable about a first axis of rotation proximate said first end of said support arm to cause said support arm to be movable between an operating position wherein said support arm extends outwardly relative to said main hopper and a storage position wherein said support arm is folded inwardly towards said main hopper in relation to said operating position, said support arm further being pivotable about a second axis of rotation proximate said first end of said support arm to cause an elevation of said second end of said support arm to be adjustable;

a conveyor having a longitudinal axis and first and second ends, a conveyor hopper at said first end, a conveyor discharge at said second end, and an internal elevator for moving seed or grain from said conveyor hopper to said conveyor discharge; and

said second end of said support arm being coupled with said conveyor between said first and second conveyor ends, said conveyor being rotatable about a third axis of rotation proximate said second end of said support arm that is not parallel to said conveyor longitudinal axis, and said conveyor being rotatable in relation to said second end of said support arm about said third of axis of rotation between an unloading position wherein said conveyor hopper is disposed below said main hopper discharge to receive agricultural product from said main hopper and a loading position wherein said conveyor discharge is disposed above said intake opening of said main hopper to dispense agricultural product into said main hopper.

11. The seed or grain tender of claim **10**, wherein said first axis of rotation extends through said main hopper discharge.

12. The seed or grain tender of claim **10**, wherein said second axis of rotation extends through said first end of said support arm.

13. The seed or grain tender of claim **10**, wherein said third axis of rotation extends through said conveyor.

14. The seed or grain tender of claim **10**, wherein said third axis of rotation extends through said second end of said support arm.

15. The seed or grain tender of claim **10**, wherein said third axis of rotation extends through said conveyor and said second end of said support arm.

16. The seed or grain tender of claim **10**, wherein said third axis of rotation is oriented at an angle having a vertical component.

17. The seed or grain tender of claim **16**, wherein said first axis of rotation is vertical.

18. The seed or grain tender of claim **17**, wherein said second axis of rotation is horizontal.

19. The seed or grain tender of claim **10**, wherein said second end of said support arm is coupled with said conveyor at an approximate center of gravity of said conveyor.

20. The seed or grain tender of claim **10**, further comprising a hydraulic piston extending at an acute angle relative to a horizontal plane to connect with a portion of said support arm spaced from said second axis of rotation.

21. The seed or grain tender of claim **10**, further comprising a stand coupled with said first end of said conveyor and movable between a stowed position allowing said conveyor hopper to be positioned below said main hopper discharge when said conveyor is in said unloading position and an extended position supporting said conveyor hopper above the ground when said conveyor is in said loading position.

* * * * *

EXHIBIT 3

CONVEYOR DISCHARGE
CONVEYOR
MAIN HOPPER
EF 275 PRECISION DELIVERY SYSTEM
FIRST CONVEYOR (THIRD)
AXIS OF ROTATION
MAIN HOPPER DISCHARGE
SECOND COUPLING
SUPPORT ARM
CONVEYOR HOPPER

FIG. 1

EXHIBIT 4

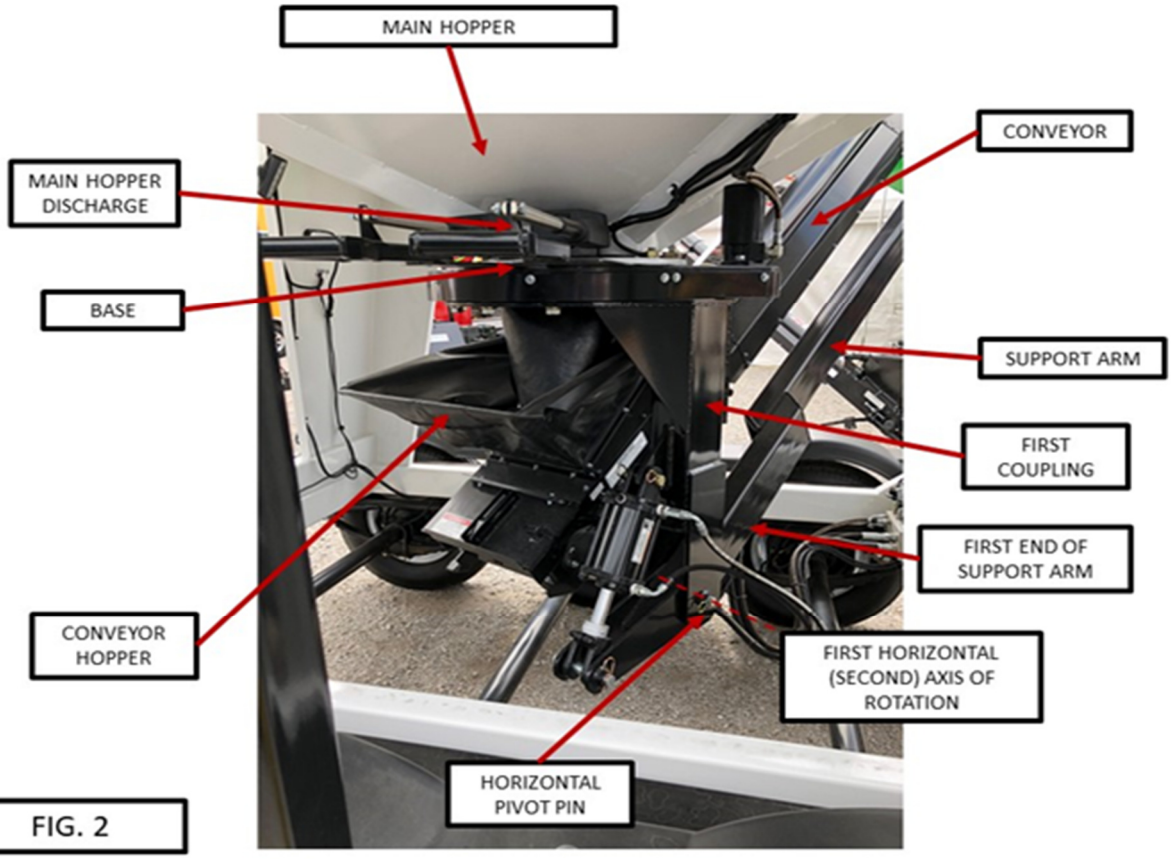
MAIN HOPPER
CONVEYOR
MAIN HOPPER DISCHARGE
BASE
SUPPORT ARM
FIRST COUPLING
FIRST END OF SUPPORT ARM
CONVEYOR HOPPER
FIRST HORIZONTAL (SECOND) AXIS OF ROTATION
HORIZONTAL PIVOT PIN

FIG. 2

EXHIBIT 5

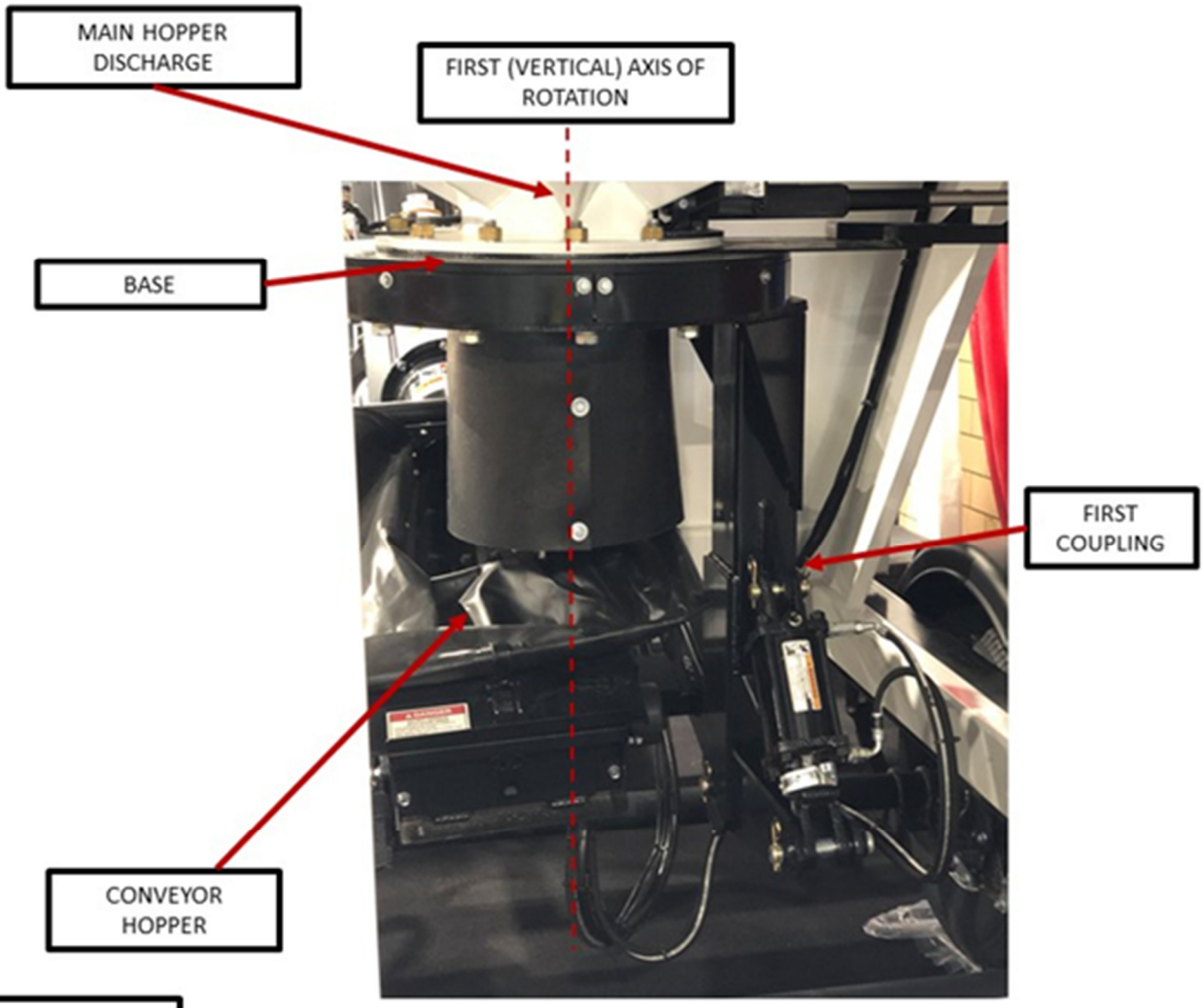
MAIN HOPPER DISCHARGE
FIRST (VERTICAL) AXIS OF ROTATION
BASE
FIRST COUPLING
CONVEYOR HOPPER

FIG. 3

EXHIBIT 6

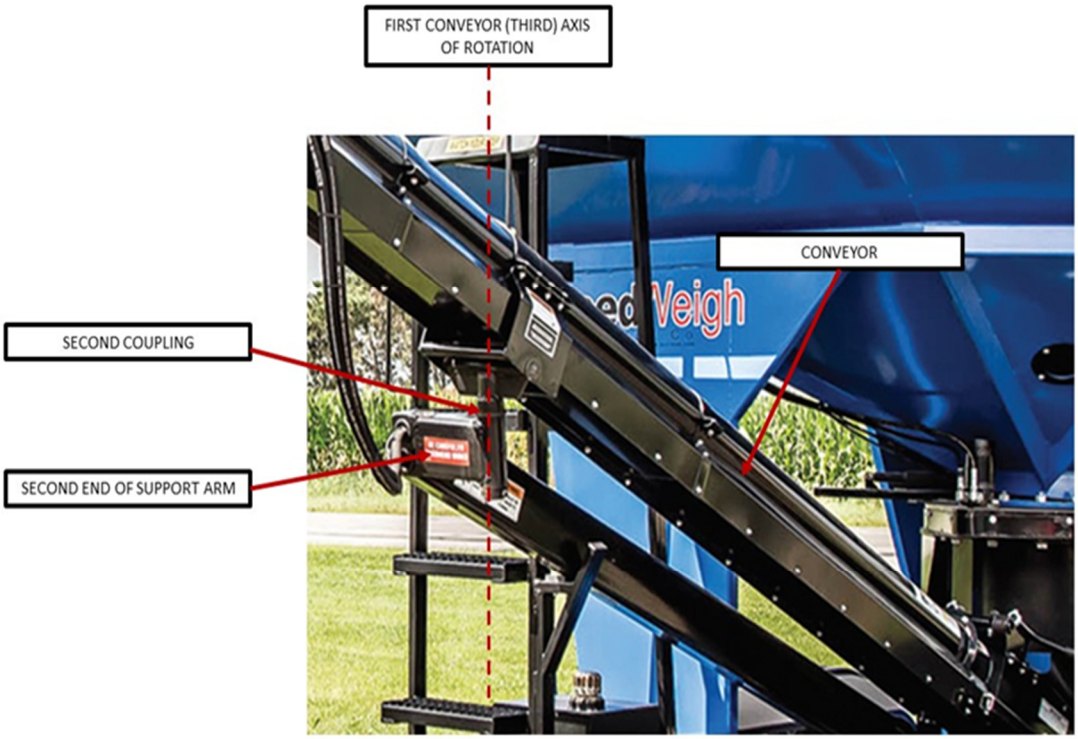
FIRST CONVEYOR (THIRD) AXIS OF ROTATION
CONVEYOR
SECOND COUPLING
SECOND END OF SUPPORT ARM

FIG. 4

JS 44 (Rev. 07/16)

CIVIL COVER SHEET

The JS 44 civil cover sheet and the information contained herein neither replace nor supplement the filing and service of pleadings or other papers as required by law, except as provided by local rules of court. This form, approved by the Judicial Conference of the United States in September 1974, is required for the use of the Clerk of Court for the purpose of initiating the civil docket sheet. *(SEE INSTRUCTIONS ON NEXT PAGE OF THIS FORM.)*

I. (a) PLAINTIFFS

UNVERFERTH MFG. CO., INC.

(b) County of Residence of First Listed Plaintiff PUTNAM
(EXCEPT IN U.S. PLAINTIFF CASES)

(c) Attorneys *(Firm Name, Address, and Telephone Number)*
See Attachment

DEFENDANTS

PAR-KAN CO., LLC

County of Residence of First Listed Defendant KOSCIUSKO
(IN U.S. PLAINTIFF CASES ONLY)

NOTE: IN LAND CONDEMNATION CASES, USE THE LOCATION OF THE TRACT OF LAND INVOLVED.

Attorneys *(If Known)*

II. BASIS OF JURISDICTION *(Place an "X" in One Box Only)*

- ☐ 1 U.S. Government Plaintiff
- ☒ 3 Federal Question *(U.S. Government Not a Party)*
- ☐ 2 U.S. Government Defendant
- ☐ 4 Diversity *(Indicate Citizenship of Parties in Item III)*

III. CITIZENSHIP OF PRINCIPAL PARTIES *(Place an "X" in One Box for Plaintiff and One Box for Defendant) (For Diversity Cases Only)*

	PTF	DEF		PTF	DEF
Citizen of This State	☐ 1	☐ 1	Incorporated *or* Principal Place of Business In This State	☐ 4	☒ 4
Citizen of Another State	☐ 2	☐ 2	Incorporated *and* Principal Place of Business In Another State	☒ 5	☐ 5
Citizen or Subject of a Foreign Country	☐ 3	☐ 3	Foreign Nation	☐ 6	☐ 6

IV. NATURE OF SUIT *(Place an "X" in One Box Only)*

CONTRACT
- ☐ 110 Insurance
- ☐ 120 Marine
- ☐ 130 Miller Act
- ☐ 140 Negotiable Instrument
- ☐ 150 Recovery of Overpayment & Enforcement of Judgment
- ☐ 151 Medicare Act
- ☐ 152 Recovery of Defaulted Student Loans (Excludes Veterans)
- ☐ 153 Recovery of Overpayment of Veteran's Benefits
- ☐ 160 Stockholders' Suits
- ☐ 190 Other Contract
- ☐ 195 Contract Product Liability
- ☐ 196 Franchise

REAL PROPERTY
- ☐ 210 Land Condemnation
- ☐ 220 Foreclosure
- ☐ 230 Rent Lease & Ejectment
- ☐ 240 Torts to Land
- ☐ 245 Tort Product Liability
- ☐ 290 All Other Real Property

TORTS

PERSONAL INJURY
- ☐ 310 Airplane
- ☐ 315 Airplane Product Liability
- ☐ 320 Assault, Libel & Slander
- ☐ 330 Federal Employers' Liability
- ☐ 340 Marine
- ☐ 345 Marine Product Liability
- ☐ 350 Motor Vehicle
- ☐ 355 Motor Vehicle Product Liability
- ☐ 360 Other Personal Injury
- ☐ 362 Personal Injury - Medical Malpractice

PERSONAL INJURY
- ☐ 365 Personal Injury - Product Liability
- ☐ 367 Health Care/ Pharmaceutical Personal Injury Product Liability
- ☐ 368 Asbestos Personal Injury Product Liability

PERSONAL PROPERTY
- ☐ 370 Other Fraud
- ☐ 371 Truth in Lending
- ☐ 380 Other Personal Property Damage
- ☐ 385 Property Damage Product Liability

CIVIL RIGHTS
- ☐ 440 Other Civil Rights
- ☐ 441 Voting
- ☐ 442 Employment
- ☐ 443 Housing/ Accommodations
- ☐ 445 Amer. w/Disabilities - Employment
- ☐ 446 Amer. w/Disabilities - Other
- ☐ 448 Education

PRISONER PETITIONS

Habeas Corpus:
- ☐ 463 Alien Detainee
- ☐ 510 Motions to Vacate Sentence
- ☐ 530 General
- ☐ 535 Death Penalty

Other:
- ☐ 540 Mandamus & Other
- ☐ 550 Civil Rights
- ☐ 555 Prison Condition
- ☐ 560 Civil Detainee - Conditions of Confinement

FORFEITURE/PENALTY
- ☐ 625 Drug Related Seizure of Property 21 USC 881
- ☐ 690 Other

LABOR
- ☐ 710 Fair Labor Standards Act
- ☐ 720 Labor/Management Relations
- ☐ 740 Railway Labor Act
- ☐ 751 Family and Medical Leave Act
- ☐ 790 Other Labor Litigation
- ☐ 791 Employee Retirement Income Security Act

IMMIGRATION
- ☐ 462 Naturalization Application
- ☐ 465 Other Immigration Actions

BANKRUPTCY
- ☐ 422 Appeal 28 USC 158
- ☐ 423 Withdrawal 28 USC 157

PROPERTY RIGHTS
- ☐ 820 Copyrights
- ☒ 830 Patent
- ☐ 840 Trademark

SOCIAL SECURITY
- ☐ 861 HIA (1395ff)
- ☐ 862 Black Lung (923)
- ☐ 863 DIWC/DIWW (405(g))
- ☐ 864 SSID Title XVI
- ☐ 865 RSI (405(g))

FEDERAL TAX SUITS
- ☐ 870 Taxes (U.S. Plaintiff or Defendant)
- ☐ 871 IRS—Third Party 26 USC 7609

OTHER STATUTES
- ☐ 375 False Claims Act
- ☐ 376 Qui Tam (31 USC 3729(a))
- ☐ 400 State Reapportionment
- ☐ 410 Antitrust
- ☐ 430 Banks and Banking
- ☐ 450 Commerce
- ☐ 460 Deportation
- ☐ 470 Racketeer Influenced and Corrupt Organizations
- ☐ 480 Consumer Credit
- ☐ 490 Cable/Sat TV
- ☐ 850 Securities/Commodities/ Exchange
- ☐ 890 Other Statutory Actions
- ☐ 891 Agricultural Acts
- ☐ 893 Environmental Matters
- ☐ 895 Freedom of Information Act
- ☐ 896 Arbitration
- ☐ 899 Administrative Procedure Act/Review or Appeal of Agency Decision
- ☐ 950 Constitutionality of State Statutes

V. ORIGIN *(Place an "X" in One Box Only)*

- ☒ 1 Original Proceeding
- ☐ 2 Removed from State Court
- ☐ 3 Remanded from Appellate Court
- ☐ 4 Reinstated or Reopened
- ☐ 5 Transferred from Another District *(specify)*
- ☐ 6 Multidistrict Litigation - Transfer
- ☐ 8 Multidistrict Litigation - Direct File

VI. CAUSE OF ACTION

Cite the U.S. Civil Statute under which you are filing *(Do not cite jurisdictional statutes unless diversity)*:
35 U.S.C. Section 271, 281 and 283-285

Brief description of cause:
This is a civil action for patent infringement.

VII. REQUESTED IN COMPLAINT:

☐ CHECK IF THIS IS A **CLASS ACTION** UNDER RULE 23, F.R.Cv.P.

DEMAND $

CHECK YES only if demanded in complaint:
JURY DEMAND: ☒ Yes ☐ No

VIII. RELATED CASE(S) IF ANY *(See instructions)*:

JUDGE _____ DOCKET NUMBER _____

DATE 7/11/2023

SIGNATURE OF ATTORNEY OF RECORD
/s/ Robert J. Palmer

FOR OFFICE USE ONLY

RECEIPT # _____ AMOUNT _____ APPLYING IFP _____ JUDGE _____ MAG. JUDGE _____

Robert J. Palmer (6316-71)
May Oberfell Lorber
4100 Edison Lakes Parkway, Suite 100 Mishawaka, IN 46545
Phone: (574) 243-4100
Facsimile: (574) 232-9789
rpalmer@maylorber.com

Joseph A. Hynds
Jenny L. Colgate
Brett A. Postal
ROTHWELL, FIGG, ERNST & MANBECK, P.C. 901 New York Ave., Suite 900
Washington, DC 20001
Phone: (202) 783-6040
Facsimile: (202) 783-6031
jhynds@rothwellfigg.com
jcolgate@rothwellfigg.com
bpostal@rothwellfigg.com
Attorneys for Plaintiff Unverferth Mfg. Co., Inc.