IN THE UNITED STATES DISTRICT COURT
FOR THE NORTHERN DISTRICT OF OHIO
WESTERN DIVISION

UNVERFERTH MFG. CO., INC., 601 South Broad Street Kalida, Ohio 45853	)	**COMPLAINT**
Plaintiff,	)	
v.	)	Civil Action No._____
MERIDIAN MFG. GROUP, INC., 2902 Expansion Boulevard Storm Lake, Iowa 50588,	)	**JURY TRIAL DEMANDED**
Defendant.	)	

COMPLAINT FOR PATENT INFRINGEMENT

Plaintiff, Unverferth Manufacturing Company, Inc. ("Unverferth"), by and through the undersigned counsel, files this Complaint for patent infringement against Defendant, Meridian MFG. Group, Inc. ("Meridian"), and hereby alleges as follows:

NATURE OF THE ACTION

1. This is a civil action for patent infringement. Plaintiff's claims are based on the unauthorized, infringing manufacture, use, importation, sale and/or offer for sale by Defendant of its seed tender products including, for example, the Seed Express 275DX, Seed Express 375DX, Seed Express 5275, and Seed Express 5375 seed tender products.

THE PARTIES

2. Plaintiff Unverferth is a corporation organized and existing under the laws of the State of Ohio having a principal place of business at 601 South Broad Street, Kalida, Ohio 45853.

Unverferth Exhibit 2008
Par-Kan v. Unverferth
IPR2024-01426

3. Upon information and belief, Defendant Meridian is a corporation organized and existing under the laws of the State of Iowa having a principal place of business at 2902 Expansion Boulevard, Storm Lake, Iowa 50588.

JURISDICTION AND VENUE

4. This is an action for patent infringement arising under the provisions of the Patent Laws of the United States, 35 U.S.C. §§ 271, 281 and 283-285. This Court has subject matter jurisdiction pursuant to 28 U.S.C. §§ 1331 and 1338(a).

5. Upon information and belief, Defendant has solicited business in the State of Ohio, transacted business within the State of Ohio and attempted to derive financial benefit from the residents of the State of Ohio, including benefits directly related to the sale of infringing products which are the subject of the patent infringement cause of action set forth herein.

6. Upon information and belief, Defendant has placed its infringing products into the stream of commerce with the expectation that they will be offered for sale, sold and used in this judicial district. Upon information and belief, Defendant's infringing products, including the Seed Express 275DX, Seed Express 375DX, Seed Express 5275, and Seed Express 5375 products, are being offered for sale and sold, for example, by Meridian authorized dealers Stansberry Seed and Service, 15703 State Highway 67, Upper Sandusky, Ohio 43351, and Harmon Seed Service, 12026 County Road T, Napoleon, Ohio 43545, which are located in this judicial district.

7. This Court has personal jurisdiction over Defendant.

8. Venue is proper in this Court pursuant to 28 U.S.C. §§ 1391 and 1400(b).

PATENT-IN-SUIT

9. On July 17, 2012, the United States Patent and Trademark Office duly and legally issued United States Patent No. 8,221,047 ("the '047 patent"), which is attached hereto as Exhibit A.

10. Plaintiff Unverferth is the owner of all right, title and interest in and to the '047 patent, including the right to sue for and recover all past, present and future damages for infringement of the '047 patent.

DEFENDANT'S INFRINGING ACTS

11. Upon information and belief, Defendant manufactures, uses, sells, offers for sale and/or imports products in and/or into the United States that infringe one or more claims of the '047 patent under United States law. Non-limiting examples of Defendant's infringing products include the Seed Express 275DX, Seed Express 375DX, Seed Express 5275, and Seed Express 5375 seed tender products. Upon information and belief, these products include a conveyor, support arm and coupling that allows the conveyor to be rotatable in relation to the second end of the support arm about a vertical axis of rotation between an unloading position where the conveyor hopper is disposed below the main hopper discharge to receive agricultural product from the main hopper and a loading position wherein the conveyor discharge is disposed above the main hopper to dispense agricultural product into the main hopper.

COUNT 1
(INFRINGEMENT OF THE '047 PATENT)

12. Plaintiff repeats and realleges the allegations of Paragraphs 1 to 11 above, as if set forth herein.

13. Upon information and belief, Defendant, either alone or in conjunction with others, has infringed, contributed to the infringement of, and/or induced others to infringe at least

claim 1 of the ’047 patent by making, using, offering for sale and/or selling infringing product(s), and will continue to do so unless enjoined by this Court.

14. Defendant’s infringement of the ’047 patent has damaged Plaintiff and will continue to cause Plaintiff substantial and irreparable harm unless enjoined by this Court.

15. At the present time, it is not known whether Defendant is deliberately and willfully infringing the ‘047 patent. Plaintiff intends to pursue discovery to determine whether the Defendant is deliberately and willfully infringing the ‘047 patent, at which time Plaintiff will, if necessary, amend its Complaint.

PRAYER FOR RELIEF

WHEREFORE, Plaintiff prays that this Court enter judgment that:

A. the ’047 patent is infringed by Defendant;

B. Defendant be preliminarily and permanently enjoined from manufacturing, using, selling and offering to sell the infringing products in the United States prior to the expiration of the ‘047 patent;

C. Plaintiff be awarded damages adequate to compensate it for Defendant’s infringement of the ’047 patent including lost profits, but in an amount no less than a reasonable royalty, and that such damages be trebled according to 35 U.S.C. § 284;

D. this case is exceptional within the meaning of 35 U.S.C. § 285, and that all costs and expenses of this action, including reasonable attorneys’ fees, be awarded to Plaintiff; and

E. Plaintiff be awarded such further relief as the Court may deem just, necessary, and/or proper.

JURY DEMAND

Plaintiff demands a trial by jury.

Dated: September 5, 2012

Respectfully submitted,

/s/ Peter N. Lavalette

Peter N. Lavalette
ROBISON CURPHEY & O'CONNELL
4 SeaGate, Ninth Floor
Toledo, Ohio 43604
Phone: (419) 249-7900
Facsimile: (419) 249-7911
plavalette@rcolaw.com

Attorneys for Plaintiff Unverferth Mfg. Co., Inc.

OF COUNSEL:

Joseph A. Hynds
Brian A. Tollefson
Matthew D. Stephens
ROTHWELL, FIGG, ERNST & MANBECK, P.C.
607 14th St., N.W., Suite 800
Washington, DC 20004
Phone: (202) 783-6040
Facsimile: (202) 783-6031
jhynds@rfem.com
btollefson@rfem.com
mstephens@rfem.com

Attorneys for Plaintiff Unverferth Mfg. Co., Inc.

US008221047B2

(12) **United States Patent**
Petersen et al.

(10) **Patent No.: US 8,221,047 B2**
(45) **Date of Patent: Jul. 17, 2012**

(54) **SEED CARRIER WITH PIVOTING CONVEYOR**

(75) Inventors: **Brian James Petersen**, Ottawa, OH (US); **David Richard Smith**, Fort Jennings, OH (US)

(73) Assignee: **Unverferth Manufacturing Company, Inc.**, Kalida, OH (US)

(*) Notice: Subject to any disclaimer, the term of this patent is extended or adjusted under 35 U.S.C. 154(b) by 56 days.

(21) Appl. No.: **12/031,867**

(22) Filed: **Feb. 15, 2008**

(65) **Prior Publication Data**

US 2008/0210145 A1 Sep. 4, 2008

Related U.S. Application Data

(60) Provisional application No. 60/901,321, filed on Feb. 15, 2007.

(51) **Int. Cl.**
B60P 1/00 (2006.01)

(52) **U.S. Cl.** **414/523**; 198/312

(58) **Field of Classification Search** 414/523; 111/11; 198/312, 315, 316.1, 317, 318
See application file for complete search history.

(56) **References Cited**

U.S. PATENT DOCUMENTS

3,090,515	A	5/1963	Crowther	
3,493,136	A	2/1970	Spellman, Jr.	
3,498,483	A	3/1970	Meharry	
3,968,771	A *	7/1976	Walgenbach et al.	118/303
4,037,745	A	7/1977	Hengen et al.	
4,411,581	A	10/1983	Niewold	
4,503,803	A *	3/1985	Barnes	118/303
4,742,938	A	5/1988	Niewold	
5,520,495	A	5/1996	Sukup	
5,529,455	A *	6/1996	Kaster et al.	414/523
5,718,556	A	2/1998	Forsyth	
5,800,116	A *	9/1998	Smith et al.	414/523
5,888,044	A *	3/1999	Baskerville	414/523
6,209,880	B1 *	4/2001	Turnwald et al.	277/402
6,325,588	B1 *	12/2001	Nolin	414/526
6,604,620	B2 *	8/2003	Dennis	198/312
6,767,174	B2 *	7/2004	Cresswell	414/523
7,393,275	B2 *	7/2008	Voss et al.	460/114
7,488,149	B2 *	2/2009	Waldner	414/532
7,500,817	B2 *	3/2009	Furrer et al.	414/522
2003/0057055	A1 *	3/2003	Haukaas et al.	198/313

OTHER PUBLICATIONS

Model 2300 Air System and the Model 4800 Air Drill, both made and sold by Concord, as illustrated in the Concord brochure, 12 pages.

* cited by examiner

Primary Examiner — Joshua Rudawitz
(74) *Attorney, Agent, or Firm* — Rothwell, Figg, Ernst & Manbeck, P.C.

(57) **ABSTRACT**

A seed carrier includes a main hopper coupled with a frame via leg members. The main hopper has a discharge. A base plate is coupled with the frame. A support arm is rotatably coupled with the base plate at a first end. A belt driven conveyor having a conveyor hopper at a first end and a discharge at a second end is rotatably coupled with a second end of said support arm at an approximate center of gravity thereof. A latch mechanism is provided for detachably coupling the first end of the conveyor with the first end of the support arm such that the conveyor hopper is position below the main hopper discharge. When the conveyor is uncoupled from the first end of the support arm, the conveyor can rotate to a loading position wherein the discharge thereof can be positioned over the main hopper.

34 Claims, 11 Drawing Sheets

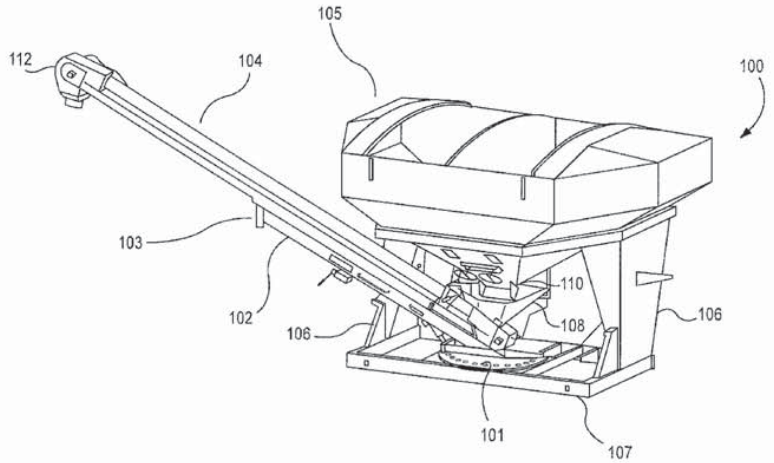

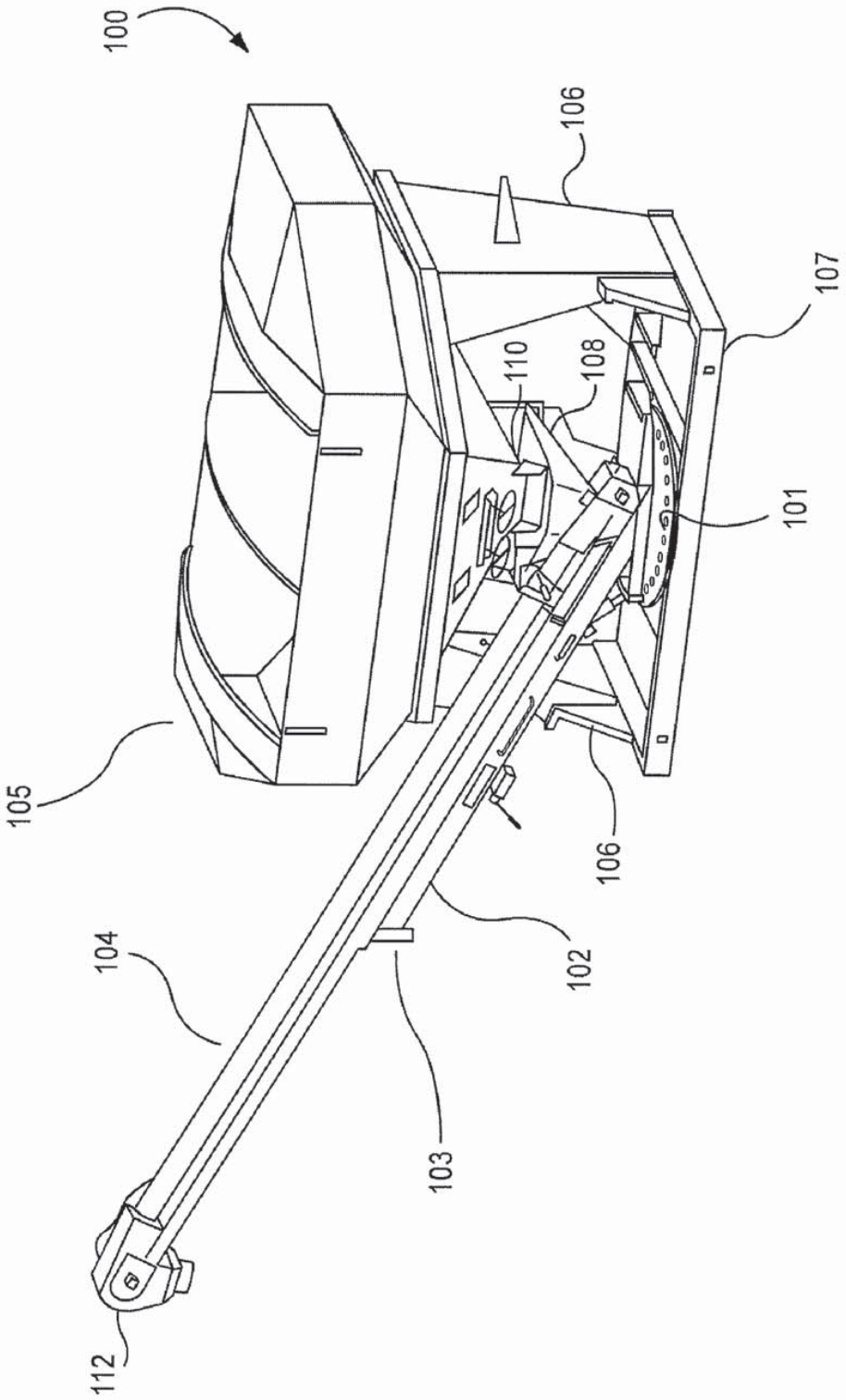

FIG. 1

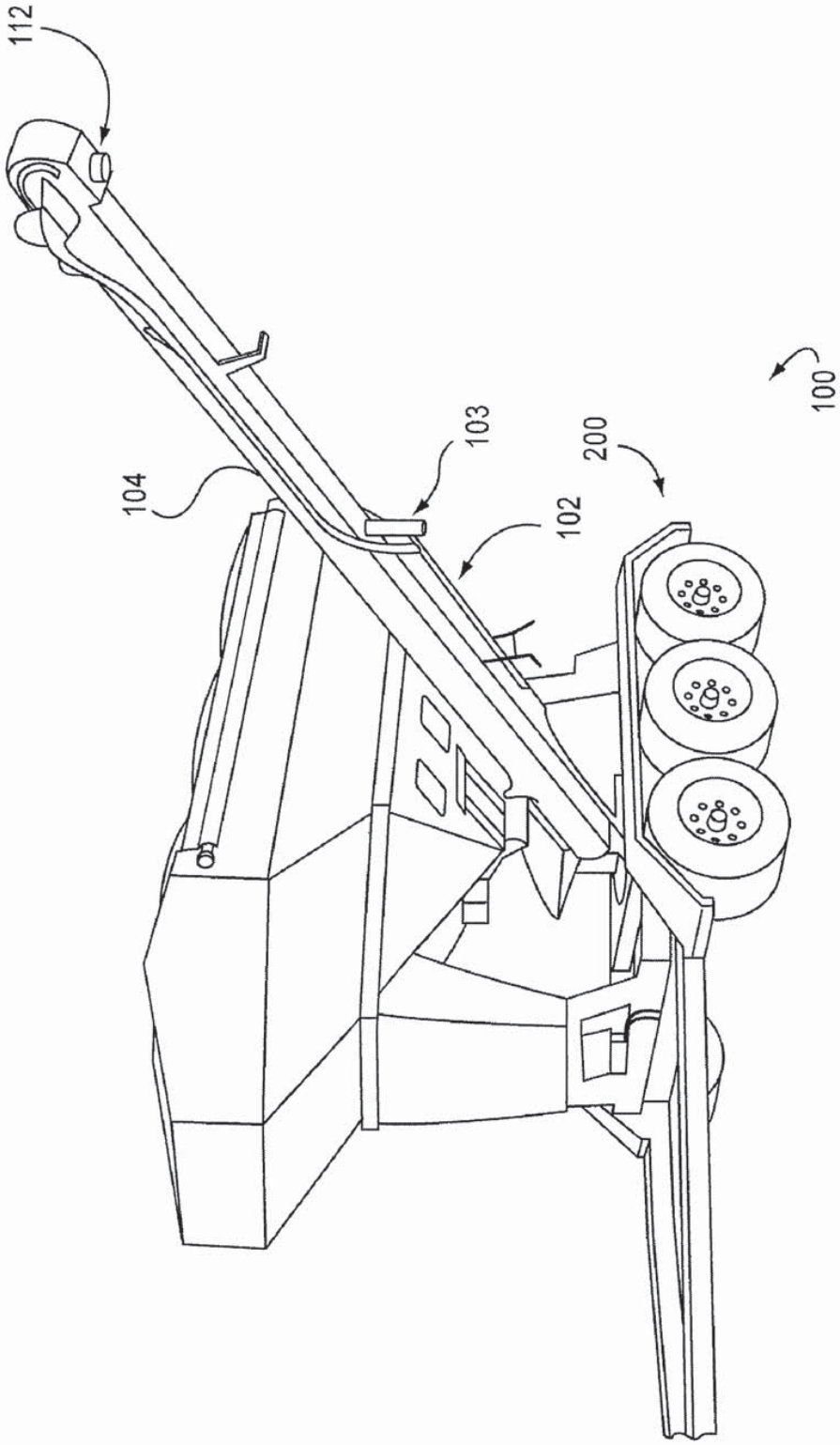

FIG.2

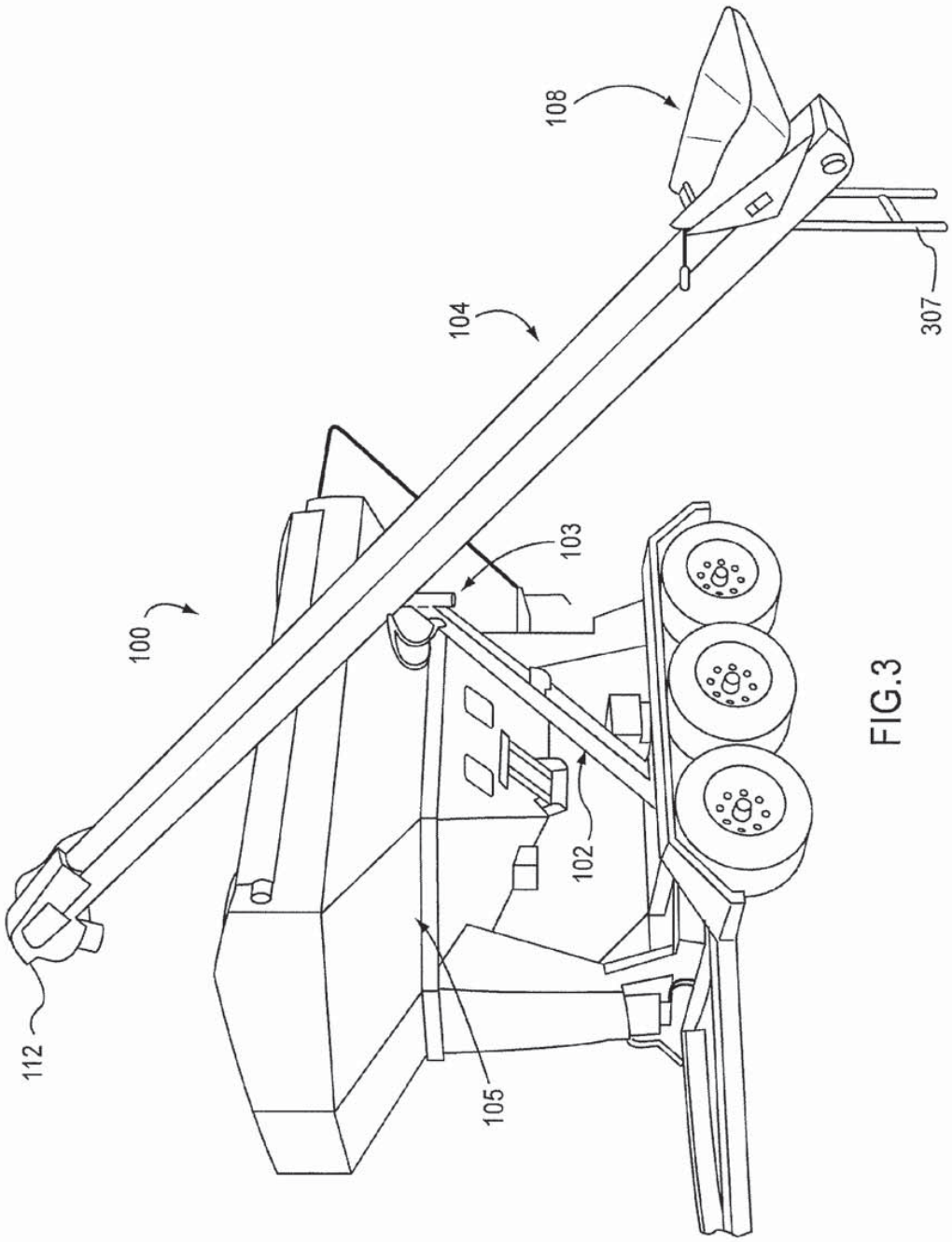

FIG.3

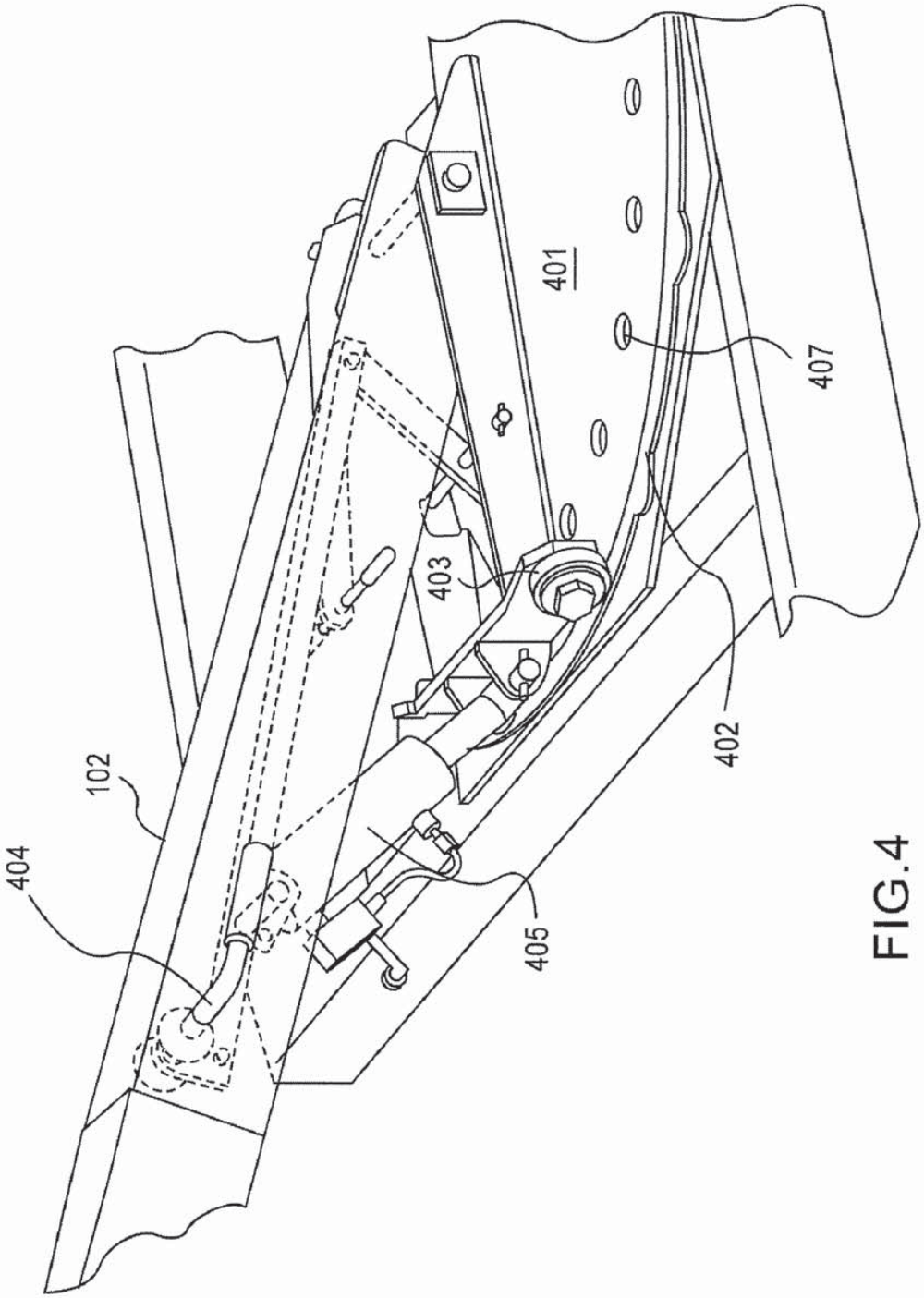

FIG.4

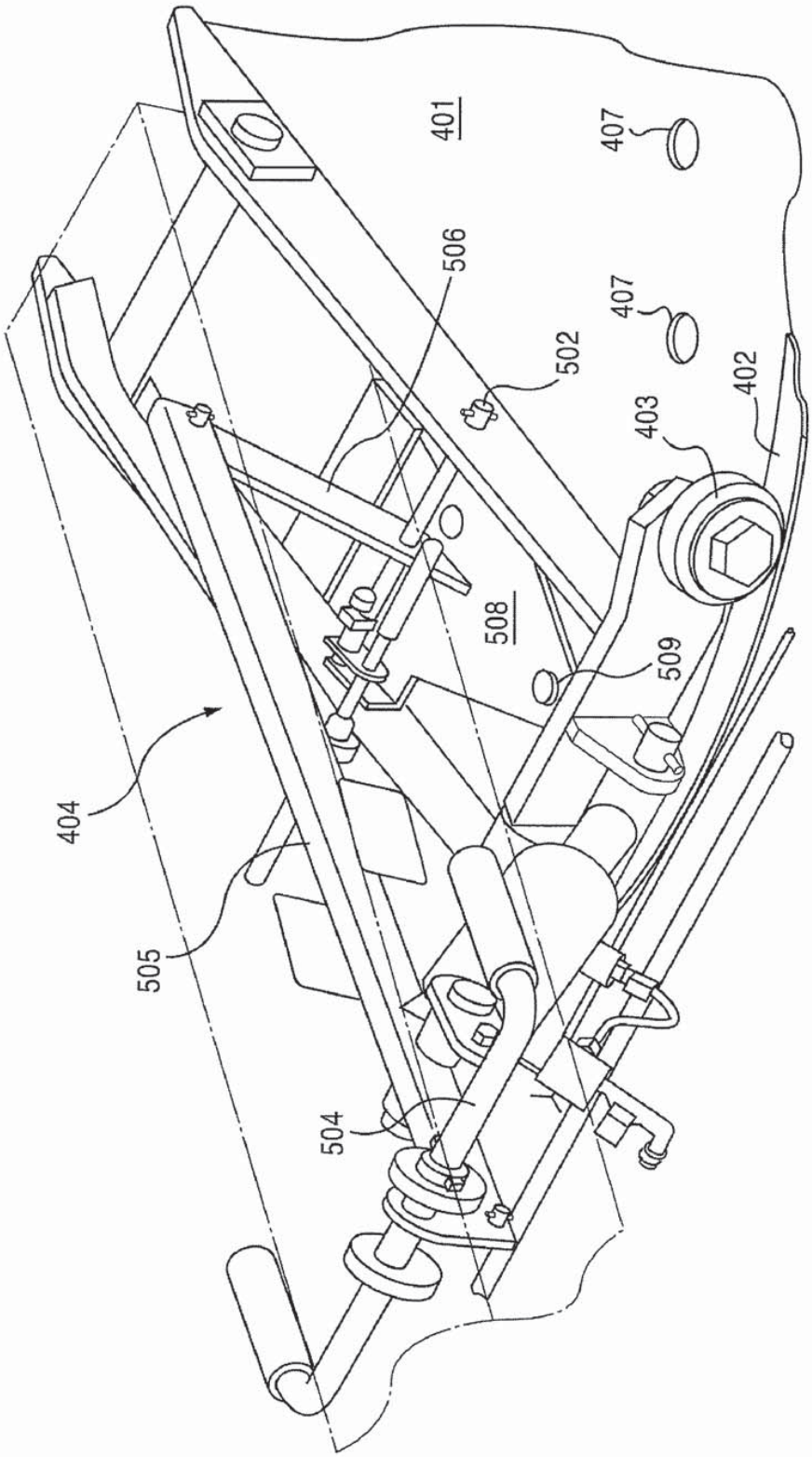

FIG.5

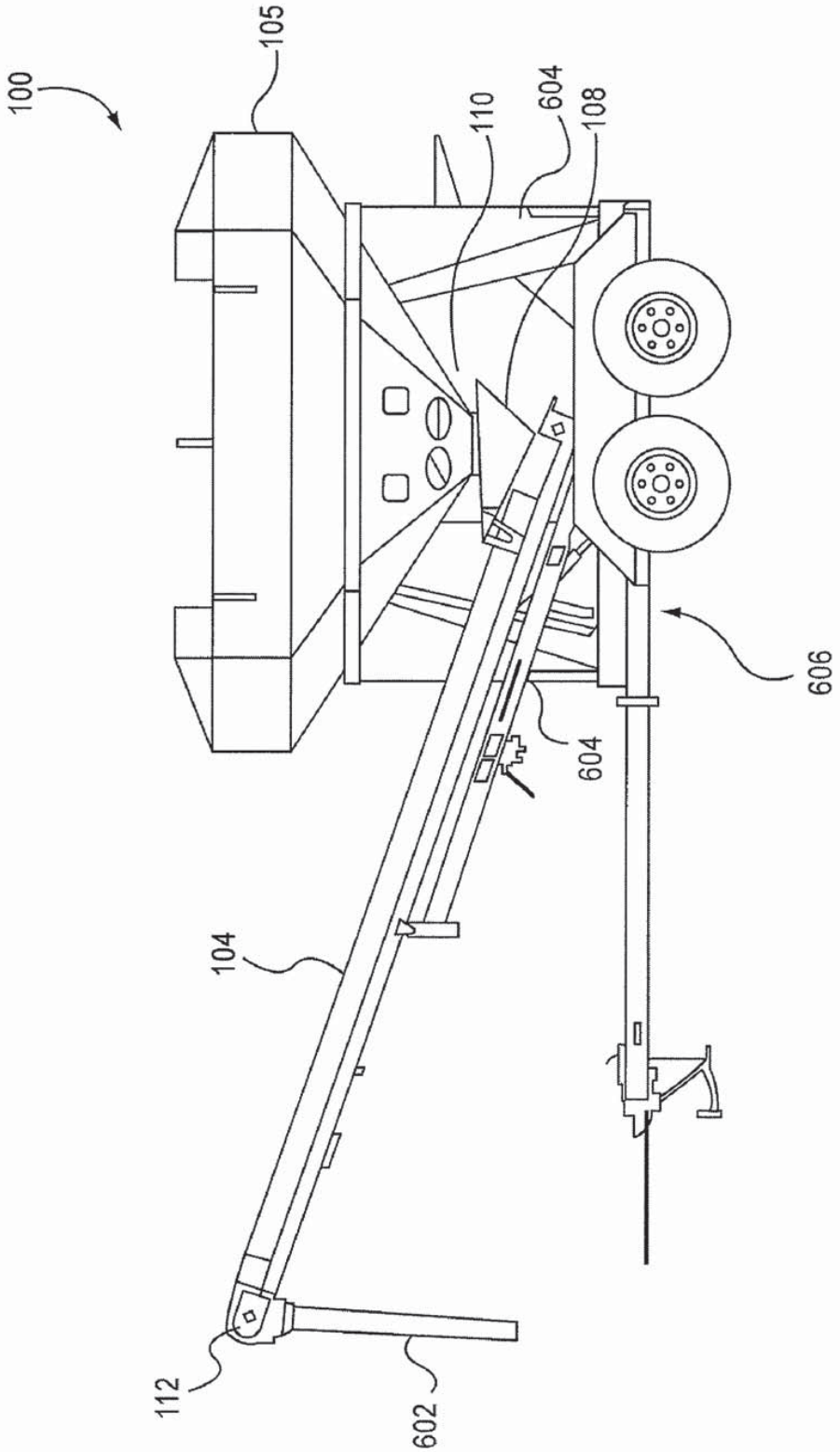

FIG.6

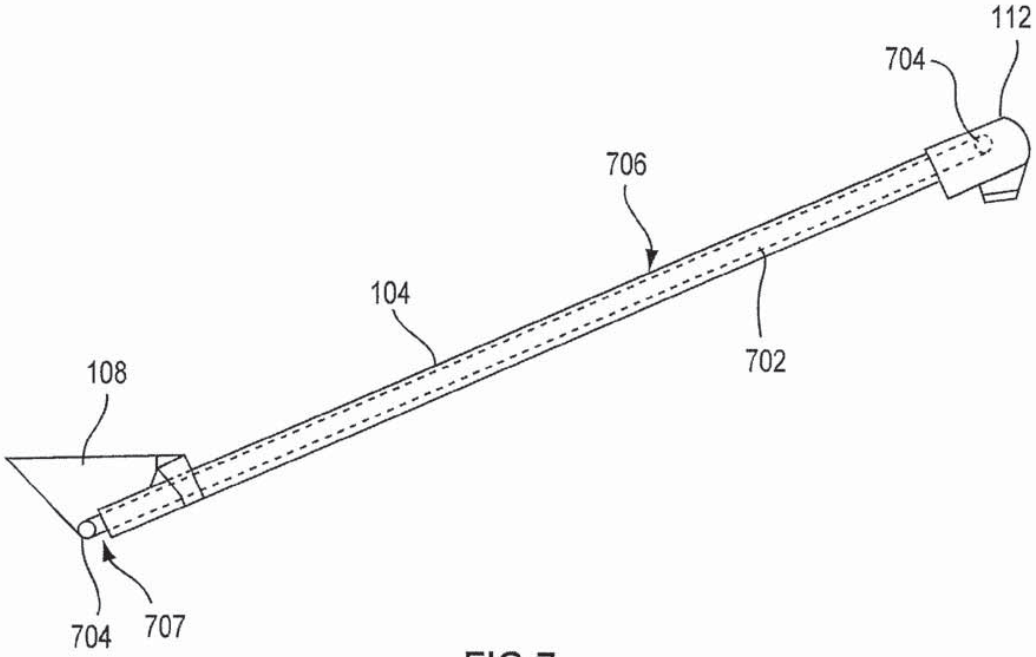

FIG.7

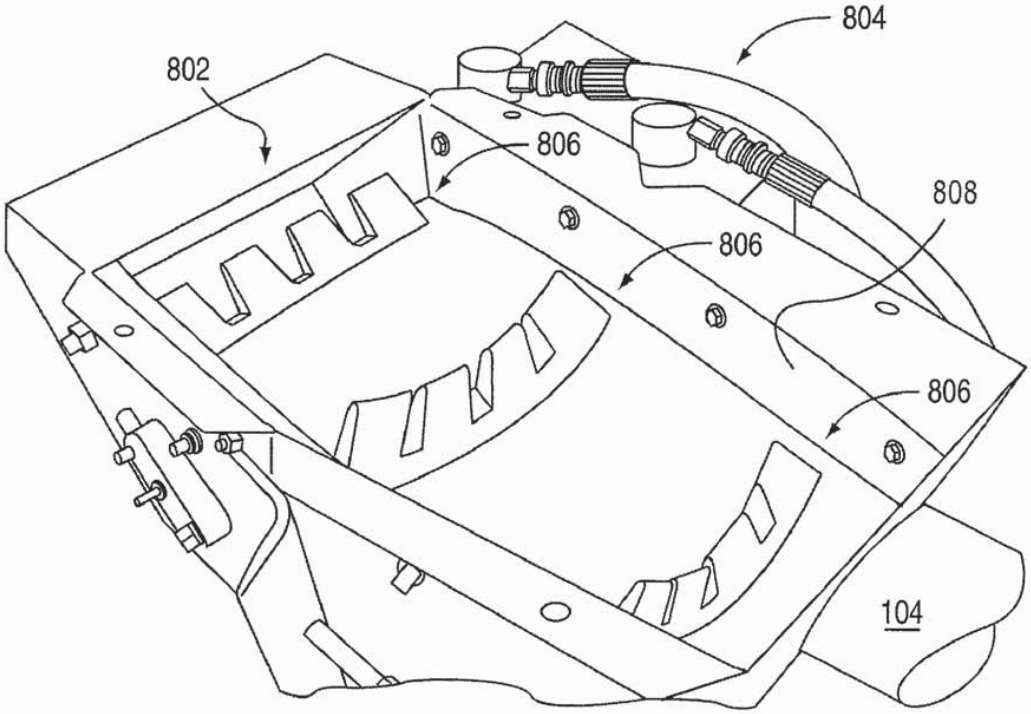

FIG.8

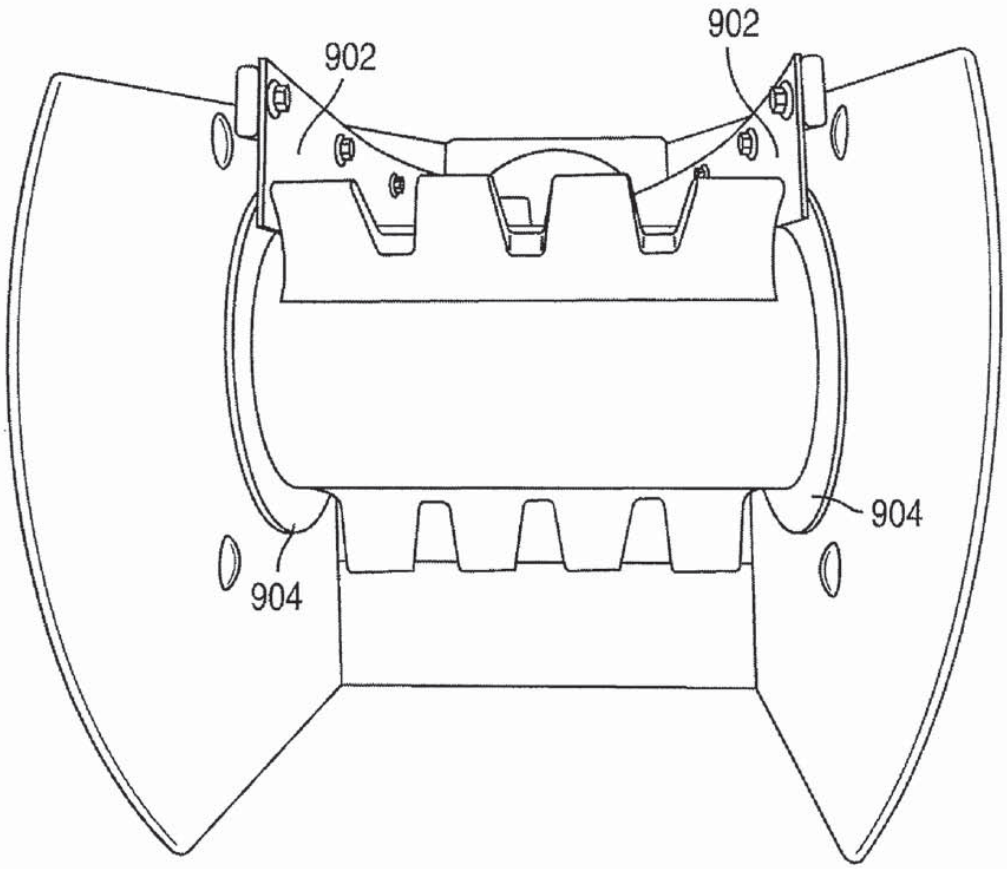

FIG.9

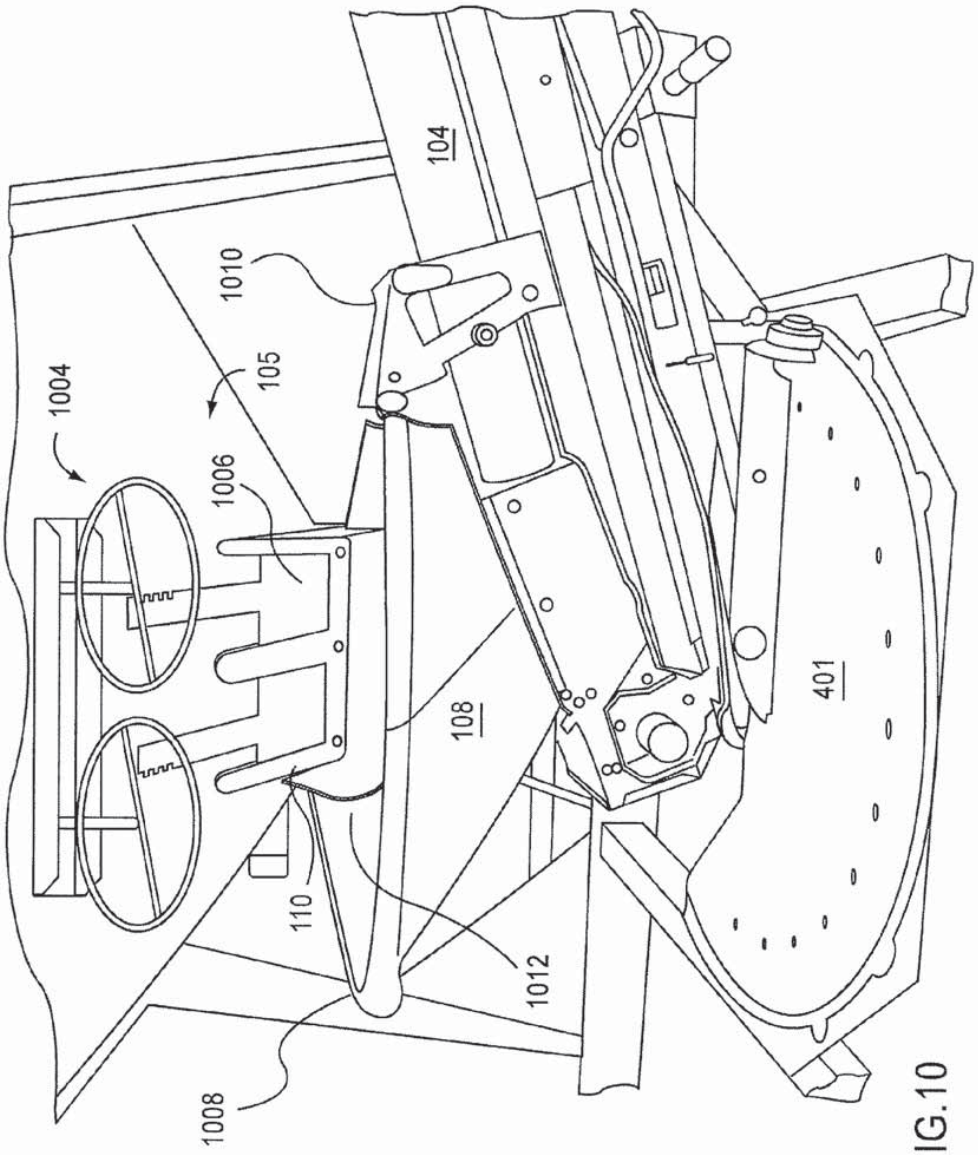

FIG.10

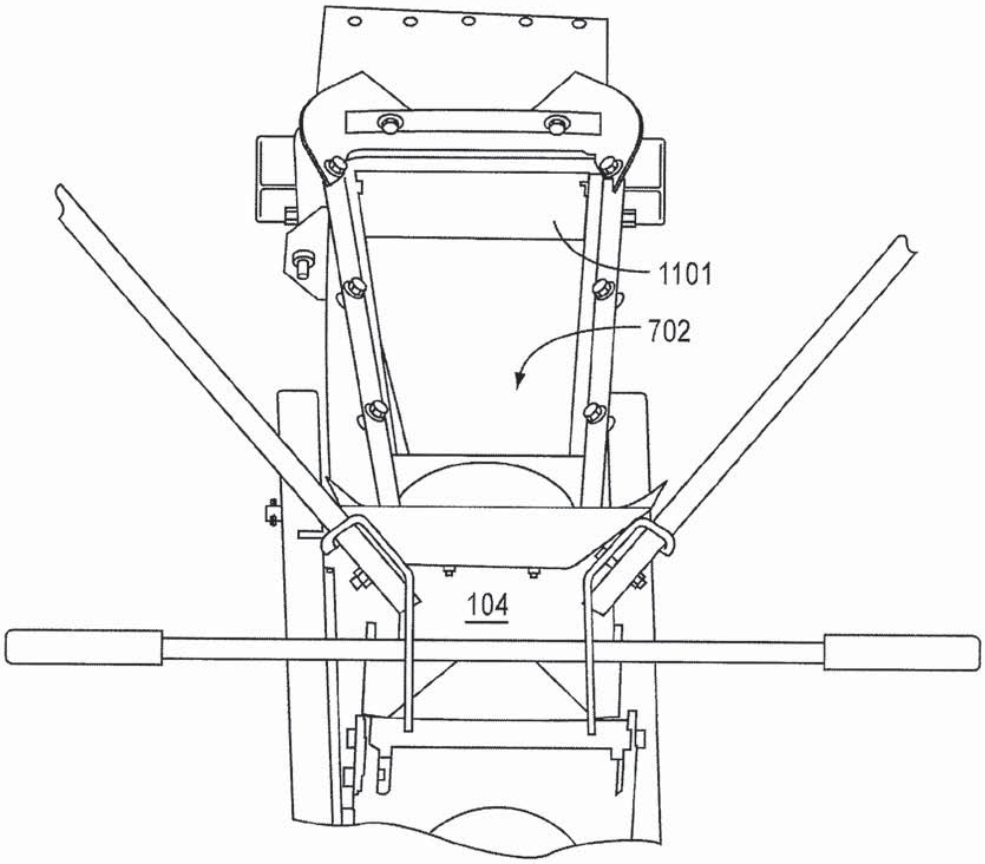

FIG.11

SEED CARRIER WITH PIVOTING CONVEYOR

CROSS-REFERENCE TO RELATED APPLICATION

The present application claims priority to Provisional Patent Application Ser. No. 60/901,321 filed on Feb. 15, 2007, the entire disclosure of which is incorporated herein by reference.

BACKGROUND OF THE INVENTION

1. Field of the Invention

The present invention relates generally to a conveyor system for a grain or seed carrier. The conveyor system includes a novel pivot system that allows it to either load or unload a container by pivoting it into a loading or unloading position.

2. Description of the Related Art

Conveyor systems for moving grain, seed, etc. are well known. Auger systems are used to rapidly move grain such as feed or the like, while belt driven conveyors are often used for moving more expensive payload, such as seed.

One belt driven conveyor system includes a generally flat belt constructed from a flexible, sturdy material such as rubber or nylon. The conveyor is housed in a tube with rollers on both ends so that the belt may rotate in order to transmit material from one end to the other. Such conveyors are used for unloading seed carriers or the like. However, current conveyors have several problems.

First, current conveyors have the problem that the material being moved can be damaged by the rollers. Second, current conveyors do not have a full range of motion as implemented in seed carries. Third, current conveyors are only implemented for unloading.

There is a need for new and improved conveyor systems that allow a wagon to be unloaded and loaded using a single mechanism.

SUMMARY OF THE INVENTION

According to an embodiment of the present invention, a seed tender or carrier is provided that includes a main hopper for holding seed and a conveyor for transferring seed to and from the main hopper.

According to an embodiment of the present invention, in an unloading position, one end of the conveyor may be positioned under the discharge of the main hopper and coupled with a pivoting support arm. In the unload position, the conveyor can be used to transfer seed from the main hopper to another location, such as to a planter, seeding unit, or the like. A pivot mechanism allows the conveyor to be rotated from under the box into a loading position in which the conveyor intake can rest on the ground or on a stand while the conveyor discharge is positioned to allow conveyed material to be discharged into the main hopper. In this loading position, the conveyor can be used to fill the main hopper.

According to an embodiment of the present invention, a conveyor hopper is provided on the intake side of the conveyor.

According to an embodiment of the present invention, the pivot mechanism allows the conveyor to swing from side to side to simplify unloading of the main hopper and the filling of planters, etc. The pivot mechanism can include a hydraulic cylinder that adjusts the vertical height of the conveyor discharge relative for different filling applications.

According to an embodiment of the present invention, a pivot single pivot point can be provided at one end of the support arm to allow the conveyor to be rotated between the loading and unloading position. The conveyor may be balanced on the pivot point at a location near or at the center of gravity, thereby permitting the conveyor to be rotated with minimal effort on the part of the operator.

According to an embodiment of the present invention, the conveyor can be rotated through at least 180 degrees about a vertical axis and so that it may be positioned in either a forward or rearward transport position. This feature enables the tender to be pulled by different vehicles such as by a pick-up truck with the conveyor forward or by a grain truck with the conveyor rearward.

Further applications and advantages of various aspects and embodiments of the present invention are discussed below with reference to the drawing figures.

BRIEF DESCRIPTION OF THE DRAWINGS

FIG. **1** illustrates a seed carrier according to an embodiment of the present invention.

FIG. **2** is a view of a seed carrier in an unloading position according to an embodiment of the present invention.

FIG. **3** is a view of a seed carrier in a loading position according to an embodiment of the present invention.

FIG. **4** is a view of a base system for the seed carrier according to an embodiment of the present invention.

FIG. **5** is a view of a lever mechanism for the base system according to an embodiment of the present invention.

FIG. **6** is a view of a seed carrier in a transport position according to an embodiment of the present invention.

FIG. **7** is a view of a belt conveyor for the seed carrier according to an embodiment of the present invention.

FIG. **8** is a view of the discharge end of a conveyor according to an embodiment of the present invention.

FIG. **9** is a forward view of a conveyor belt wrapping around a roller according to an embodiment of the present invention.

FIG. **10** is a view of the conveyor hopper in an unloading position according to an embodiment of the present invention.

FIG. **11** illustrates the receiving end of the conveyor according to one embodiment of the present invention.

DETAILED DESCRIPTION OF THE PREFERRED EMBODIMENTS

While the present invention may be embodied in many different forms, a number of illustrative embodiments are described herein with the understanding that the present disclosure is to be considered as providing examples of the principles of the invention and such examples are not intended to limit the invention to preferred embodiments described herein and/or illustrated herein.

In embodiments of the present invention, the novel conveyor pivot system can be implemented with seed carrier or seeding machines. The following section describes non-limiting examples of illustrative seeding equipment according to embodiments of the present invention. It should be appreciated that the following examples are provided for illustration and the present invention is not intended to be limited to the embodiments described herein.

FIG. **1** is a diagram depicting a seed carrier having a tube conveyor according to an embodiment of the present invention. The seed carrier **100** includes a main hopper **105** coupled to a frame **107** by legs **106**. A conveyor **104** is supported by a support arm **102** coupled with a pivoting mechanism **101**

fixed to the frame **107**. The conveyor **104** is pivotably coupled with the support arm by a coupling **103** at a point that is preferably near or at the center of gravity of the conveyor **104**. The conveyor **104** is also coupled to the support arm **102** by a latch (not shown) at the bottom of the conveyor. The latch allows the conveyor **104** to be uncoupled from the support arm **102** at the bottom so that the conveyor is free to rotate about the coupling **103**. By positioning the coupling **103** at or near the center of gravity of the conveyor **104**, the conveyor **104** balances on the pivoting coupling **103** such that little effort is required to rotate the conveyor **104**.

The conveyor **104** includes a conveyor hopper **108** at its base, which is shown in the unloading position below the gravity discharge **110** of the main hopper **105**. At the other end of the conveyor **104** is the discharge **112**. Seed can be gravity feed from the main hopper **105** into the conveyor hopper **108**, which can then be moved to the discharge **112** of the conveyor **104** by an internal elevator (not shown). In one embodiment, the elevator is a motor-driven belt type elevator coupled onto rollers at both ends of the conveyor.

The seed carrier **100** may be transported by conventional means such as on a trailer. FIG. **2** illustrates the seed carrier **100** on a three axle trailer **200** according to an embodiment of the present invention. As shown, the conveyor **104** is in the unloading position.

FIG. **3** illustrates the seed carrier **100** in the loading position. As shown, the conveyor **104** is uncoupled from the support arm **102** at its base and rotated 180 degrees about pivot coupling **103** so that the conveyor hopper **108** is positioned at a convenient location away from the carrier while the discharge **112** of the conveyor **104** is located over the main hopper **105**. A stand **307** is provided for holding the conveyor hopper **108** in place. The stand **307** may be integrated with the conveyor **104**.

Accordingly, in the loading position, grain, seed or like can be feed into the conveyor hopper **108** to be moved to the discharge **112** for filling the main hopper **105**.

FIG. **4** is a view of the pivoting base of the support arm **102**. As shown, the support arm **102** can be pivotably coupled to a base **401** at a center point so that the support arm **102** is rotatable about a vertical axis. Wheels **403** provide support and can run along a track **402** to facilitate the support arm's **102** motion about the perimeter of the base **401**. The support arm **102** can be locked into a selected position of the base **401** by engaging a pin (not shown) with one of a plurality of the holes **407** distributed around the base **401**. The pin is disengaged with a hole by actuating a lever mechanism **404**, which lifts the pin out of a hole. The lever mechanism **404** may be spring actuated to bias the pin toward the holes, so that simply releasing the lever will allow the pin to engage with one of the holes **407**. Also shown, a hydraulic piston **405** is coupled with the support arm **102** for adjusting the height of the support arm **102**.

FIG. **5** is an alternative view of the support arm base. As shown, lever mechanism **404** includes a handle **504** coupled with a cross-bars **505** and **506**. Cross-bar **506** is coupled to cross-bar **505** on one end and to a plate **508** having a pin **509** on the other end, and with a pivoting coupling **502** at a point near the plate. Rotating the handle **504** applies a downward force to crossbar **506** causing it to rotate about the coupling **502** to raise the plate **508** to disengage the pin **509**. While disengaged, the base **401** is free to rotate about its vertical axis. Springs may be provided for biasing the pin **509** toward the holes **407** for engaging therewith, or the pin **509** can be engaged by gravity.

FIG. **6** is a side view of a seed carrier **100** according to an embodiment of the present invention. As shown in FIG. **6**, the conveyor **104** includes an elongated discharge spout **602** and is positioned in a transport position. Support members **604** may be mounted on or integral with the legs **106** for holding the conveyor **104** in a forward transport position as shown, or a rearward transport position. As shown, the carrier **100** is fixed to a dual axle trailer **606**.

FIG. **7** illustrates a basic belt driven conveyor according to an embodiment of the present invention. The conveyor **104** comprises a belt **702** that winds about a pair of rollers **704**. The rollers are positioned outside a tube section **706**, a first roller being positioned in the discharge **112** and a second roller being positioned below the conveyor hopper **108**. A motor (not shown) or other means for turning the rollers may be provided at either end of the conveyor. A void **707** exists below the rollers **704** to allow the belt **702** to travel on its return path.

FIG. **8** is a view of a conveyor belt according to an embodiment of the present invention. The discharge end of a conveyor is shown where a conveyor belt wraps around a motor driven roller **802**. The motor may be a hydraulic motor and therefore, hydraulic hoses **804** provide hydraulic fluid flow to and from the motor. Teeth **806** are provided to push grain or seed up the conveyor. As shown, the conveyor belt is cupped in the tube section but flattens out as it reaches the roller **802**. Channeling members (seals) **808** are provided on each side of the belt to form a seal and prevent grain or seed from falling off the edges of the belt as the belt begins to conform to the tubular portion of the conveyor **104**.

FIG. **9** is a front view of the belt as it travels over the roller **802**. Channeling members (seals) **902** are provided on each side of the belt to form a seal and prevent grain or seed from falling off the edges of the belt as the belt flattens at the roller. As shown, the channeling members **902** are fixed to the conveyor discharge **112** with bolts, but can be fixed by other means or can be integral with the discharge.

Discs **904** are provided at the rollers at the edge of the belt to provide additional channeling/sealing means. The discs **904** are preferably integral with the rollers or coupled therewith so that they may rotate.

FIG. **10** is a side view of the hopper end of the conveyor **104**. As shown, conveyor hopper **108** sits above in ingress **1003** to the conveyor **104**. When coupled to the support arm **102**, as shown, the conveyor hopper **108** is positioned below a discharge of the main hopper **106**. The discharge **110** may be opened by conventional means. As showed, a wheel handle mechanism **1004** is provided for opening the discharge doors **1006**.

The conveyor hopper **108** is preferably manufactured from light weight materials such as plastic, canvas, rubber or vinyl. As shown, the hopper **108** may include a mechanism for opening and closing the hopper. In this embodiment, flexible coupling or hinge is provided at one end **1008** of the hopper **108** and a mechanism **1010** is provided at the end of the hopper **108** and is coupled with the conveyor **104**, such that the hopper **108** may be made to have an appropriate fit with the discharge **110** of the main hopper **105**. A flap **1012** can be provided at the bottom of the discharge **110**.

FIG. **10** is a side view of the hopper end of the conveyor **104**. As shown, conveyor hopper **108** sits above in ingress to the conveyor **104**. When coupled to the support arm **102**, as shown, the conveyor hopper **108** is positioned below a discharge of the main hopper **106**. The discharge **110** may be opened by conventional means. As showed, a wheel handle mechanism **1004** is provided for opening the discharge doors **1006**.

One will understand that hydraulic power can be provided by a towing vehicle, such as a tractor or the like or alterna-

tively, hydraulic power can be provided on the tender and driving electrically from the towing vehicle, such as a truck.

Thus, a number of preferred embodiments have been fully described above with reference to the drawing figures. Although the invention has been described based upon these preferred embodiments, it would be apparent to those of skill in the art that certain modifications, variations, and alternative constructions could be made to the described embodiments within the spirit and scope of the invention

We claim:

1. A seed or grain tender comprising:

a frame;

a main hopper mounted on said frame and having a main hopper discharge;

a base mounted on said frame below said main hopper discharge;

a support arm having first and second ends;

a first coupling connecting said first end of said support arm with said base, said first coupling being rotatable in relation to said base about a first vertical axis of rotation, and said first end of said support arm being rotatable in relation to said first coupling about a first horizontal axis of rotation;

a conveyor having a longitudinal axis and first and second ends, a conveyor hopper at said first end, a conveyor discharge at said second end, and an internal elevator for moving seed or grain from said conveyor hopper to said conveyor discharge; and

a second coupling connecting said second end of said support arm with said conveyor at an approximate center of gravity of said conveyor, said second coupling defining a second vertical axis of rotation that is not parallel to said conveyor longitudinal axis, and said conveyor being rotatable in relation to said second end of said support arm about said second vertical axis of rotation between an unloading position wherein said conveyor hopper is disposed below said main hopper discharge to receive agricultural product from said main hopper and a loading position wherein said conveyor discharge is disposed above said main hopper to dispense agricultural product into said main hopper.

2. The seed or grain tender of claim **1**, wherein said support arm extends upwardly at an acute angle from said base.

3. The seed or grain tender of claim **2**, wherein said conveyor is parallel to said support arm in said unloading position.

4. The seed or grain tender of claim **3**, wherein said conveyor is disposed above said support arm in said unloading position.

5. The seed or grain tender of claim **1**, wherein said conveyor is rotatable in relation to said second coupling about a second horizontal axis of rotation.

6. The seed or grain tender of claim **5**, wherein said second horizontal axis of rotation extends through said second coupling.

7. The seed or grain tender of claim **1**, further comprising a stand coupled with said first end of said conveyor and movable between a stowed position allowing said conveyor hopper to be positioned below said main hopper discharge when said conveyor is in said unloading position and an extended position supporting said conveyor hopper above the ground when said conveyor is in said loading position.

8. The seed or grain tender of claim **1**, wherein said first vertical axis extends through said first end of said support arm.

9. The seed or grain tender of claim **1**, wherein said first vertical axis extends through said base.

10. The seed or grain tender of claim **1**, wherein said second end of said support arm terminates at or near said approximate center of gravity of said conveyor.

11. The seed or grain tender of claim **1**, wherein said first end of said support arm is fixed at a first height and said second end of said support arm is pivotable between a range of heights.

12. The seed or grain tender of claim **1**, further comprising a lift device for adjusting a height of said second end of said support arm.

13. The seed or grain tender of claim **12**, wherein said lift device is a pressurized cylinder.

14. The seed or grain tender of claim **12**, wherein said lift device is a hydraulic cylinder.

15. The seed or grain tender of claim **1**, wherein said first coupling is a U-shaped member with a horizontal base portion and a pair of upright portions, and wherein said first horizontal axis extends through said upright portions of said first coupling.

16. The seed or grain tender of claim **1**, further comprising a locking mechanism for locking or unlocking said support arm in relation to said base.

17. The seed or grain tender of claim **16**, wherein said locking mechanism includes a pin releasably engageable with one of a plurality of holes formed in said base.

18. The seed or grain tender of claim **17**, wherein said pin is spring-biased toward said holes in said base.

19. The seed or grain tender of claim **17**, wherein said internal elevator includes a motor-driven belt.

20. A seed or grain tender comprising:

a frame;

a main hopper mounted on said frame and having a main hopper discharge;

a base mounted on said frame below said main hopper discharge;

a support arm having first and second ends;

a first coupling connecting said first end of said support arm with said base, said first coupling being rotatable in relation to said base about a first vertical axis of rotation, and said first end of said support arm being rotatable in relation to said first coupling about a first horizontal axis of rotation;

a lift device extending from said base to a portion of said support arm between said first and second ends such that said support arm extends upwardly at an acute angle from said base;

a conveyor having a longitudinal axis and first and second ends, a conveyor hopper at said first end, a conveyor discharge at said second end, and a motor-driven elevator for moving seed or grain from said conveyor hopper to said conveyor discharge; and

a second coupling connecting said second end of said support arm with said conveyor at an approximate center of gravity of said conveyor, said second coupling defining a second vertical axis of rotation that is not parallel to said conveyor longitudinal axis, and said conveyor being rotatable in relation to said second end of said support arm about said second vertical axis of rotation between an unloading position wherein said conveyor hopper is disposed below said main hopper discharge to receive agricultural product from said main hopper and a loading position wherein said conveyor discharge is disposed above said main hopper to dispense agricultural product into said main hopper, wherein said conveyor is disposed parallel to and above said support arm in said unloading position; and

a locking mechanism for locking and unlocking said support arm in relation to said base.

21. The seed or grain tender of claim **20**, wherein said conveyor is disposed above said support arm in said unloading position.

22. The seed or grain tender of claim **20**, wherein said conveyor is rotatable in relation to said second coupling about a second horizontal axis of rotation.

23. The seed or grain tender of claim **22**, wherein said second horizontal axis of rotation extends through said second coupling.

24. The seed or grain tender of claim **20**, further comprising a stand coupled with said first end of said conveyor and movable between a stowed position allowing said conveyor hopper to be positioned below said main hopper discharge when said conveyor is in said unloading position and an extended position supporting said conveyor hopper above the ground when said conveyor is in said loading position.

25. The seed or grain tender of claim **20**, wherein said first vertical axis extends through said first end of said support arm.

26. The seed or grain tender of claim **20**, wherein said first vertical axis extends through said base.

27. The seed or grain tender of claim **20**, wherein said second end of said support arm terminates at or near said approximate center of gravity of said conveyor.

28. The seed or grain tender of claim **20**, wherein said first end of said support arm is fixed at a first height and said second end of said support arm is pivotable between a range of heights.

29. The seed or grain tender of claim **20**, wherein said lift device is a pressurized cylinder.

30. The seed or grain tender of claim **20**, wherein said lift device is a hydraulic cylinder.

31. The seed or grain tender of claim **20**, wherein said first coupling is a U-shaped member with a horizontal base portion and a pair of upright portions, and

wherein said first horizontal axis extends through said upright portions of said first coupling.

32. The seed or grain tender of claim **20**, wherein said locking mechanism includes a pin releasably engageable with one of a plurality of holes formed in said base.

33. The seed or grain tender of claim **32**, wherein said pin is spring-biased toward said holes in said base.

34. The seed or grain tender of claim **20**, wherein said internal elevator includes a motor-driven belt.

* * * * *

JS 44 (Rev. 10/4/11)

CIVIL COVER SHEET

The JS 44 civil coversheet and the information contained herein neither replace nor supplement the filing and service of pleadngs or other papers as required by law, except as provided by local rules of court. This form, approved by the Judicial Conference of the United States inSeptember 1974, is required for the use of the Clerk of Court for the purpose of initiating the civil docket sheet. *(SEE INSTRUCTIONS ON NEXT PAGE OF THIS FORM.)*

I. (a) PLAINTIFFS
Unverferth Mfg. Co., Inc.

(b) County of Residence of First Listed Plaintiff Putnam
(EXCEPT IN U.S. PLAINTIFF CASES)

(c) Attorneys *(Firm Name, Address, and Telephone Number)*

DEFENDANTS
Meridian Mfg. Group, Inc.

County of Residence of First Listed Defendant _____
(IN U.S. PLAINTIFF CASES ONLY)

NOTE: IN LAND CONDEMNATION CASES, USE THE LOCATION OF THE TRACT OF LAND INVOLVED.

Attorneys *(If Known)*

II. BASIS OF JURISDICTION *(Place an "X" in One Box Only)*

- ☐ 1 U.S. Government Plaintiff
- ☒ 3 Federal Question *(U.S. Government Not a Party)*
- ☐ 2 U.S. Government Defendant
- ☐ 4 Diversity *(Indicate Citizenship of Parties in Item III)*

III. CITIZENSHIP OF PRINCIPAL PARTIES *(Place an "X" in One Box for Plaintiff) and One Box for Defendant)*
(For Diversity Cases Only)

	PTF	DEF		PTF	DEF
Citizen of This State	☐ 1	☐ 1	Incorporated *or* Principal Place of Business In This State	☒ 4	☐ 4
Citizen of Another State	☐ 2	☐ 2	Incorporated *and* Principal Place of Business In Another State	☐ 5	☐ 5
Citizen or Subject of a Foreign Country	☐ 3	☐ 3	Foreign Nation	☐ 6	☐ 6

IV. NATURE OF SUIT *(Place an "X" in One Box Only)*

CONTRACT
- ☐ 110 Insurance
- ☐ 120 Marine
- ☐ 130 Miller Act
- ☐ 140 Negotiable Instrument
- ☐ 150 Recovery of Overpayment & Enforcement of Judgment
- ☐ 151 Medicare Act
- ☐ 152 Recovery of Defaulted Student Loans (Excl. Veterans)
- ☐ 153 Recovery of Overpayment of Veteran's Benefits
- ☐ 160 Stockholders' Suits
- ☐ 190 Other Contract
- ☐ 195 Contract Product Liability
- ☐ 196 Franchise

REAL PROPERTY
- ☐ 210 Land Condemnation
- ☐ 220 Foreclosure
- ☐ 230 Rent Lease & Ejectment
- ☐ 240 Torts to Land
- ☐ 245 Tort Product Liability
- ☐ 290 All Other Real Property

TORTS

PERSONAL INJURY
- ☐ 310 Airplane
- ☐ 315 Airplane Product Liability
- ☐ 320 Assault, Libel & Slander
- ☐ 330 Federal Employers' Liability
- ☐ 340 Marine
- ☐ 345 Marine Product Liability
- ☐ 350 Motor Vehicle
- ☐ 355 Motor Vehicle Product Liability
- ☐ 360 Other Personal Injury
- ☐ 362 Personal Injury - Med. Malpractice

PERSONAL INJURY
- ☐ 365 Personal Injury - Product Liability
- ☐ 367 Health Care/ Pharmaceutical Personal Injury Product Liability
- ☐ 368 Asbestos Personal Injury Product Liability

PERSONAL PROPERTY
- ☐ 370 Other Fraud
- ☐ 371 Truth in Lending
- ☐ 380 Other Personal Property Damage
- ☐ 385 Property Damage Product Liability

CIVIL RIGHTS
- ☐ 440 Other Civil Rights
- ☐ 441 Voting
- ☐ 442 Employment
- ☐ 443 Housing/ Accommodations
- ☐ 445 Amer. w/Disabilities - Employment
- ☐ 446 Amer. w/Disabilities - Other
- ☐ 448 Education

PRISONER PETITIONS
- ☐ 510 Motions to Vacate Sentence

Habeas Corpus:
- ☐ 530 General
- ☐ 535 Death Penalty
- ☐ 540 Mandamus & Other
- ☐ 550 Civil Rights
- ☐ 555 Prison Condition
- ☐ 560 Civil Detainee - Conditions of Confinement

FORFEITURE/PENALTY
- ☐ 625 Drug Related Seizure of Property 21 USC 881
- ☐ 690 Other

LABOR
- ☐ 710 Fair Labor Standards Act
- ☐ 720 Labor/Mgmt. Relations
- ☐ 740 Railway Labor Act
- ☐ 751 Family and Medical Leave Act
- ☐ 790 Other Labor Litigation
- ☐ 791 Empl. Ret. Inc. Security Act

IMMIGRATION
- ☐ 462 Naturalization Application
- ☐ 463 Habeas Corpus - Alien Detainee (Prisoner Petition)
- ☐ 465 Other Immigration Actions

BANKRUPTCY
- ☐ 422 Appeal 28 USC 158
- ☐ 423 Withdrawal 28 USC 157

PROPERTY RIGHTS
- ☐ 820 Copyrights
- ☒ 830 Patent
- ☐ 840 Trademark

SOCIAL SECURITY
- ☐ 861 HIA (1395ff)
- ☐ 862 Black Lung (923)
- ☐ 863 DIWC/DIWW (405(g))
- ☐ 864 SSID Title XVI
- ☐ 865 RSI (405(g))

FEDERAL TAX SUITS
- ☐ 870 Taxes (U.S. Plaintiff or Defendant)
- ☐ 871 IRS—Third Party 26 USC 7609

OTHER STATUTES
- ☐ 375 False Claims Act
- ☐ 400 State Reapportionment
- ☐ 410 Antitrust
- ☐ 430 Banks and Banking
- ☐ 450 Commerce
- ☐ 460 Deportation
- ☐ 470 Racketeer Influenced and Corrupt Organizations
- ☐ 480 Consumer Credit
- ☐ 490 Cable/Sat TV
- ☐ 850 Securities/Commodities/ Exchange
- ☐ 890 Other Statutory Actions
- ☐ 891 Agricultural Acts
- ☐ 893 Environmental Matters
- ☐ 895 Freedom of Information Act
- ☐ 896 Arbitration
- ☐ 899 Administrative Procedure Act/Review or Appeal of Agency Decision
- ☐ 950 Constitutionality of State Statutes

V. ORIGIN *(Place an "X" in One Box Only)*

- ☒ 1 Original Proceeding
- ☐ 2 Removed from State Court
- ☐ 3 Remanded from Appellate Court
- ☐ 4 Reinstated or Reopened
- ☐ 5 Transferred from another district *(specify)*
- ☐ 6 Multidistrict Litigation

VI. CAUSE OF ACTION

Cite the U.S. Civil Statute under which you are filing *(Do not cite jurisdictional statutes unless diversity)*:
28 USC § 1331 and 1338(a)

Brief description of cause:

VII. REQUESTED IN COMPLAINT:

☐ CHECK IF THIS IS A CLASS ACTION UNDER F.R.C.P. 23

DEMAND $

CHECK YES only if demanded in complaint:
JURY DEMAND: ☑ Yes ☐ No

VIII. RELATED CASE(S) IF ANY

(See instructions): JUDGE _____ DOCKET NUMBER _____

DATE
09/05/2012

SIGNATURE OF ATTORNEY OF RECORD
/s/ Peter N. Lavalette

FOR OFFICE USE ONLY

RECEIPT # _____ AMOUNT _____ APPLYING IFP _____ JUDGE _____ MAG. JUDGE _____

UNITED STATES DISTRICT COURT
NORTHERN DISTRICT OF OHIO

I. Civil Categories: (Please check one category only).

1. ☑ General Civil
2. ☐ Administrative Review/Social Security
3. ☐ Habeas Corpus Death Penalty

*If under Title 28, §2255, name the SENTENCING JUDGE: _____

CASE NUMBER: _____

II. **RELATED OR REFILED CASES**. See LR 3.1 which provides in pertinent part: "If an action is filed or removed to this Court and assigned to a District Judge after which it is discontinued, dismissed or remanded to a State court, and subsequently refiled, it shall be assigned to the same Judge who received the initial case assignment without regardfor the place of holding court in which the case was refiled. Counsel or a party without counsel shall be responsible for bringing such cases to the attention of the Court by responding to the questions included on the Civil Cover Sheet."

This action is ☐ **RELATED** to another **PENDING** civil case. This action is ☐ **REFILED** pursuant to **LR 3.1**.

If applicable, please indicate on page 1 in section VIII, the name of the Judge and case number.

III. In accordance with Local Civil Rule **3.8**, actions involving counties in the Eastern Division shall be filed at any of the divisional offices therein. Actions involving counties in the Western Division shall be filed at the Toledo office. For the purpose of determining the proper division, and for statistical reasons, the following information is requested.

ANSWER ONE PARAGRAPH ONLY. ANSWER PARAGRAPHS 1 THRU 3 IN ORDER. UPON FINDING WHICH PARAGRAPH APPLIES TO YOUR CASE, ANSWER IT AND STOP.

(1) **Resident defendant**. If the defendant resides in a county within this district, please set forth the name of such county

COUNTY:

Corporation **For the purpose of answering the above, a corporation is deemed to be a resident of that county in which it has its principal place of business in that district.**

(2) **Non-Resident defendant**. If no defendant is a resident of a county in this district, please set forth the county wherein the cause of action arose or the event complained of occurred.

COUNTY: **Wyandot and Henry Counties**

(3) **Other Cases**. If no defendant is a resident of this district, or if the defendant is a corporation not having a principle place of business within the district, and the cause of action arose or the event complained of occurred outside this district, please set forth the county of the plaintiff's residence.

COUNTY:

IV. The Counties in the Northern District of Ohio are divided into divisions as shown below. After the county is determined in Section III, please check the appropriate division.

EASTERN DIVISION

☐	**AKRON**	**(Counties: Carroll, Holmes, Portage, Stark, Summit, Tuscarawas and Wayne)**
☐	**CLEVELAND**	**(Counties: Ashland, Ashtabula, Crawford, Cuyahoga, Geauga, Lake, Lorain, Medina and Richland)**
☐	**YOUNGSTOWN**	**(Counties: Columbiana, Mahoning and Trumbull)**

WESTERN DIVISION

☑	**TOLEDO**	**(Counties: Allen, Auglaize, Defiance, Erie, Fulton, Hancock, Hardin, Henry, Huron, Lucas, Marion, Mercer, Ottawa, Paulding, Putnam, Sandusky, Seneca VanWert, Williams, Wood and Wyandot)**