IN THE UNITED STATES DISTRICT COURT
FOR THE NORTHERN DISTRICT OF OHIO
WESTERN DIVISION

UNVERFERTH MFG. CO., INC., 601 South Broad Street Kalida, Ohio 45853	)	Case No.:
Plaintiff,	)	**COMPLAINT**
v.	)	**JURY TRIAL DEMANDED**
J&M MFG. CO., INC., 284 Railroad Street Fort Recovery, Ohio 45846	)	
Defendant.	)	

COMPLAINT FOR PATENT INFRINGEMENT

Plaintiff, Unverferth Manufacturing Company, Inc. ("Unverferth"), by and through the undersigned counsel, files this Complaint for patent infringement against Defendant, J&M Manufacturing Co., Inc. ("J&M"), and hereby alleges as follows:

NATURE OF THE ACTION

1. This is a civil action for patent infringement. Plaintiff's claims are based on the unauthorized, infringing manufacture, use, importation, sale and/or offer for sale by Defendant of certain of its seed tender products including, for example, the "SpeedTender Seed Delivery System" products.

THE PARTIES

2. Plaintiff Unverferth is a corporation organized and existing under the laws of the State of Ohio having a place of business at 601 South Broad Street, Kalida, Ohio 45853.

Unverferth Exhibit 2011
Par-Kan v. Unverferth
IPR2024-01426

3. Upon information and belief, Defendant J&M is a corporation organized and existing under the laws of the State of Ohio having a place of business at 284 Railroad Street, Fort Recovery, Ohio 45846.

JURISDICTION AND VENUE

4. This is an action for patent infringement arising under the provisions of the Patent Laws of the United States, 35 U.S.C. §§ 271, 281 and 283-285. This Court has subject matter jurisdiction pursuant to 28 U.S.C. §§ 1331 and 1338(a).

5. Upon information and belief, Defendant manufactures, uses, offers for sale and/or sells infringing products, including the SpeedTender Seed Delivery System products, at Defendant's facility in Fort Recovery, Ohio, which is located within this judicial district.

6. Upon information and belief, Defendant has placed its infringing products into the stream of commerce with the expectation that they will be offered for sale, sold and used in this judicial district. By way of example, upon information and belief, Defendant's infringing SpeedTender Seed Delivery Systems products are available through its dealers including H.G. Violet Equipment, 2103 N. Main St., Delphos, Ohio 45833 and Kenn-Feld Group, 10305 Liberty Union Rd., Van Wert, Ohio 45891, which are located in this judicial district.

7. This Court has personal jurisdiction over Defendant.

8. Venue is proper in this Court pursuant to 28 U.S.C. §§ 1391 and 1400(b).

THE PATENTS-IN-SUIT

9. On July 17, 2012, the United States Patent and Trademark Office ("the USPTO") duly and legally issued U.S. Patent No. 8,221,047 ("the '047 patent"), which is attached hereto as Exhibit A.

10. Plaintiff Unverferth is the owner of all right, title and interest in and to the

'047 patent, including the right to sue for and recover all past, present and future damages for infringement of the '047 patent.

11. On March 3, 2015, the United States Patent and Trademark Office ("the USPTO") duly and legally issued U.S. Patent No. 8,967,940 ("the '940 patent"), which is attached hereto as Exhibit B.

12. Plaintiff Unverferth is the owner of all right, title and interest in and to the '940 patent, including the right to sue for and recover all past, present and future damages for infringement of the '940 patent.

13. Plaintiff Unverferth manufactures, uses, sells and/or offers for sale seed tender products that practice the '047 and '940 patents.

14. Upon information and belief, Defendant had knowledge of Plaintiff's seed tender products and the '047 and '940 patents prior to the filing of this Complaint.

DEFENDANT'S INFRINGING ACTS

15. Upon information and belief, Defendant manufactures, uses, sells, and/or offers for sale products in and/or into the United States that infringe at least claim 1 of the '047 patent under United States law. Non-limiting examples of Defendant's products that infringe the '047 patent include the SpeedTender Seed Delivery System products, such as model numbers 275ST, 375ST, 500ST, and 510ST.

16. Upon information and belief, the SpeedTender Seed Delivery System products are a seed or grain tender including a frame, a main hopper mounted on the frame and having a main hopper discharge.

17. Upon information and belief, the SpeedTender Seed Delivery System products include a base mounted on the frame below the main hopper discharge.

18. Upon information and belief, the SpeedTender Seed Delivery System products include a support arm having first and second ends.

19. Upon information and belief, the SpeedTender Seed Delivery System products include a first coupling connecting the first end of the support arm with the base, the first coupling being rotatable in relation to the base about a first vertical axis of rotation, and the first end of the support arm being rotatable in relation to the first coupling about a first horizontal axis of rotation.

20. Upon information and belief, the SpeedTender Seed Delivery System products include a conveyor having a longitudinal axis and first and second ends, a conveyor hopper at the first end, a conveyor discharge at the second end, and an internal elevator for moving seed or grain from the conveyor hopper to the conveyor discharge.

21. Upon information and belief, the SpeedTender Seed Delivery System products include a second coupling connecting the second end of the support arm with the conveyor at an approximate center of gravity of the conveyor, the second coupling defining a second vertical axis of rotation that is not parallel to the conveyor longitudinal axis, and the conveyor being rotatable in relation to the second end of the support arm about the second vertical axis of rotation between an unloading position wherein the conveyor hopper is disposed below the main hopper discharge to receive agricultural product from the main hopper and a loading position wherein the conveyor discharge is disposed above the main hopper to dispense agricultural product into the main hopper.

22. Upon information and belief, Defendant manufactures, uses, sells, and/or offers for sale products in and/or into the United States that also infringe at least claim 16 of the '940 patent under United States law. Non-limiting examples of Defendant's products that infringe the

'940 patent include the SpeedTender Seed Delivery System products, such as model numbers 275ST, 375ST, 500ST, and 510ST.

23. Upon information and belief, the SpeedTender Seed Delivery System products are a seed or grain tender including a main hopper having a main hopper discharge.

24 Upon information and belief, the SpeedTender Seed Delivery System products include a base positioned below the main hopper.

25. Upon information and belief, the SpeedTender Seed Delivery System products include a support arm having first and second ends.

26. Upon information and belief, the SpeedTender Seed Delivery System products include a first coupling connecting the first end of the support arm with the base, the first coupling being rotatable in relation about a first vertical axis of rotation, and the first end of the support arm being rotatable about a first horizontal axis of rotation.

27. Upon information and belief, the SpeedTender Seed Delivery System products include a conveyor having a longitudinal axis and first and second ends, a conveyor hopper at the first end, and a conveyor discharge at the second end.

28. Upon information and belief, the SpeedTender Seed Delivery System products include a second coupling connecting the second end of the support arm with the conveyor at an approximate center of gravity of the conveyor, the second coupling defining a first conveyor axis of rotation that is not parallel to the conveyor longitudinal axis, and the conveyor being rotatable about the first conveyor axis of rotation between an unloading position wherein the conveyor hopper is disposed below the main hopper discharge to receive agricultural product from the main hopper and a loading position wherein the conveyor discharge is disposed above the main hopper to dispense agricultural product into the main hopper.

29. Upon information and belief, Defendant reverse-engineered and copied Plaintiff's seed tender products when designing Defendant's seed delivery products, including, but not limited to, the SpeedTender Seed Delivery System products.

COUNT 1
(Direct Infringement of the '047 Patent)

30. Plaintiff repeats and re-alleges the allegations of Paragraphs 1-29 above, as if set forth herein.

31. Upon information and belief, Defendant has directly infringed and is directly infringing at least claim 1 of the '047 patent by making, using, offering for sale and/or selling at least the SpeedTender Seed Delivery System products, and will continue to do so unless enjoined by this Court.

32. Defendant's direct infringement of the '047 patent will damage Plaintiff and will continue to cause Plaintiff substantial and irreparable harm unless enjoined by this Court.

33. Upon information and belief, Defendant had knowledge of the '047 Patent prior to the filing of this Complaint. Upon information and belief, Defendant has willfully infringed, and continues to willfully infringe, the '047 Patent.

COUNT 2
(Direct Infringement of the '940 Patent)

34. Plaintiff repeats and re-alleges the allegations of Paragraphs 1-33 above, as if set forth herein.

35. Upon information and belief, Defendant has directly infringed and is directly infringing at least claim 16 of the '940 patent by making, using, offering for sale and/or selling at least the SpeedTender Seed Delivery System products, and will continue to do so unless enjoined by this Court.

36. Defendant's direct infringement of the '940 patent will damage Plaintiff and will continue to cause Plaintiff substantial and irreparable harm unless enjoined by this Court.

37. Upon information and belief, Defendant had knowledge of the '940 Patent prior to the filing of this Complaint. Upon information and belief, Defendant has willfully infringed, and continues to willfully infringe, the '940 Patent.

PRAYER FOR RELIEF

WHEREFORE, Plaintiff prays that this Court enter judgment that:

A. The '047 and '940 patents are valid and enforceable;

B. The '047 and '940 patents are directly infringed by Defendant;

C. Defendant has willfully infringed the '047 and '940 patents;

D. Defendant be permanently enjoined from manufacturing, using, selling and offering to sell the infringing products in the United States prior to the expiration of the '047 and '940 patents;

E. Plaintiff be awarded damages adequate to compensate it for Defendant's infringement of the '047 and '940 patents including lost profits, but in an amount no less than a reasonable royalty, and that such damages be trebled according to 35 U.S.C. § 284;

F. This case is exceptional within the meaning of 35 U.S.C. § 285, and that all costs and expenses of this action, including reasonable attorneys' fees, be awarded to Plaintiff; and

F. Plaintiff be awarded such further relief as the Court may deem just, necessary, and/or proper.

JURY DEMAND

Plaintiff demands a trial by jury.

Dated: September 13, 2016

Respectfully submitted,

/s/ James P. Silk, Jr.

James P. Silk, Jr. (0062463)
SPENGLER NATHANSON P.L.L.
Four SeaGate, Suite 400
Toledo, Ohio 43604
Telephone: (419) 241-2210
Facsimile: (419) 241-8599
jsilk@snlaw.com

OF COUNSEL:

Joseph A. Hynds
Derek F. Dahlgren
Brett A. Postal
ROTHWELL, FIGG, ERNST
& MANBECK, P.C.
607 14th Street, N.W., Suite 800
Washington, DC 20005
Telephone: (202) 783-6040
Facsimile: (202) 783-6031
jhynds@rfem.com
ddahlgren@rfem.com
bpostal@rfem.com

Attorneys for Plaintiff Unverferth Mfg. Co., Inc.

EXHIBIT A

US008221047B2

(12) **United States Patent**
Petersen et al.

(10) **Patent No.: US 8,221,047 B2**
(45) **Date of Patent: Jul. 17, 2012**

(54) **SEED CARRIER WITH PIVOTING CONVEYOR**

(75) Inventors: **Brian James Petersen**, Ottawa, OH (US); **David Richard Smith**, Fort Jennings, OH (US)

(73) Assignee: **Unverferth Manufacturing Company, Inc.**, Kalida, OH (US)

(*) Notice: Subject to any disclaimer, the term of this patent is extended or adjusted under 35 U.S.C. 154(b) by 56 days.

(21) Appl. No.: **12/031,867**

(22) Filed: **Feb. 15, 2008**

(65) **Prior Publication Data**

US 2008/0210145 A1 Sep. 4, 2008

Related U.S. Application Data

(60) Provisional application No. 60/901,321, filed on Feb. 15, 2007.

(51) **Int. Cl.**
B60P 1/00 (2006.01)

(52) **U.S. Cl.** **414/523**; 198/312

(58) **Field of Classification Search** 414/523; 111/11; 198/312, 315, 316.1, 317, 318
See application file for complete search history.

(56) **References Cited**

U.S. PATENT DOCUMENTS

3,090,515	A	5/1963	Crowther	
3,493,136	A	2/1970	Spellman, Jr.	
3,498,483	A	3/1970	Meharry	
3,968,771	A *	7/1976	Walgenbach et al.	118/303
4,037,745	A	7/1977	Hengen et al.	
4,411,581	A	10/1983	Niewold	
4,503,803	A *	3/1985	Barnes	118/303
4,742,938	A	5/1988	Niewold	
5,520,495	A	5/1996	Sukup	
5,529,455	A *	6/1996	Kaster et al.	414/523
5,718,556	A	2/1998	Forsyth	
5,800,116	A *	9/1998	Smith et al.	414/523
5,888,044	A *	3/1999	Baskerville	414/523
6,209,880	B1 *	4/2001	Turnwald et al.	277/402
6,325,588	B1 *	12/2001	Nolin	414/526
6,604,620	B2 *	8/2003	Dennis	198/312
6,767,174	B2 *	7/2004	Cresswell	414/523
7,393,275	B2 *	7/2008	Voss et al.	460/114
7,488,149	B2 *	2/2009	Waldner	414/532
7,500,817	B2 *	3/2009	Furrer et al.	414/522
2003/0057055	A1 *	3/2003	Haukaas et al.	198/313

OTHER PUBLICATIONS

Model 2300 Air System and the Model 4800 Air Drill, both made and sold by Concord, as illustrated in the Concord brochure, 12 pages.

* cited by examiner

Primary Examiner — Joshua Rudawitz
(74) *Attorney, Agent, or Firm* — Rothwell, Figg, Ernst & Manbeck, P.C.

(57) **ABSTRACT**

A seed carrier includes a main hopper coupled with a frame via leg members. The main hopper has a discharge. A base plate is coupled with the frame. A support arm is rotatably coupled with the base plate at a first end. A belt driven conveyor having a conveyor hopper at a first end and a discharge at a second end is rotatably coupled with a second end of said support arm at an approximate center of gravity thereof. A latch mechanism is provided for detachably coupling the first end of the conveyor with the first end of the support arm such that the conveyor hopper is position below the main hopper discharge. When the conveyor is uncoupled from the first end of the support arm, the conveyor can rotate to a loading position wherein the discharge thereof can be positioned over the main hopper.

34 Claims, 11 Drawing Sheets

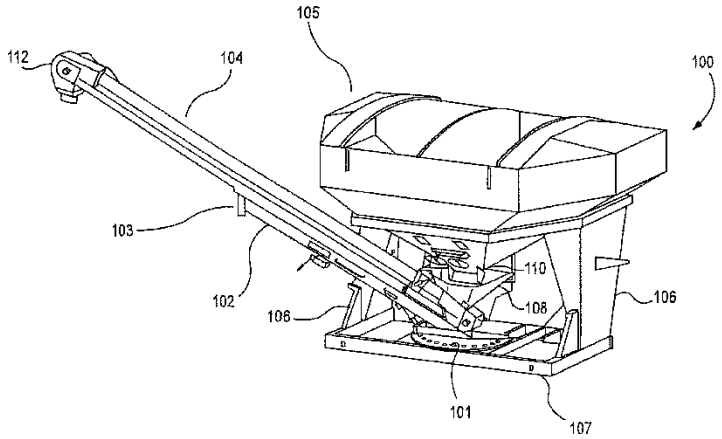

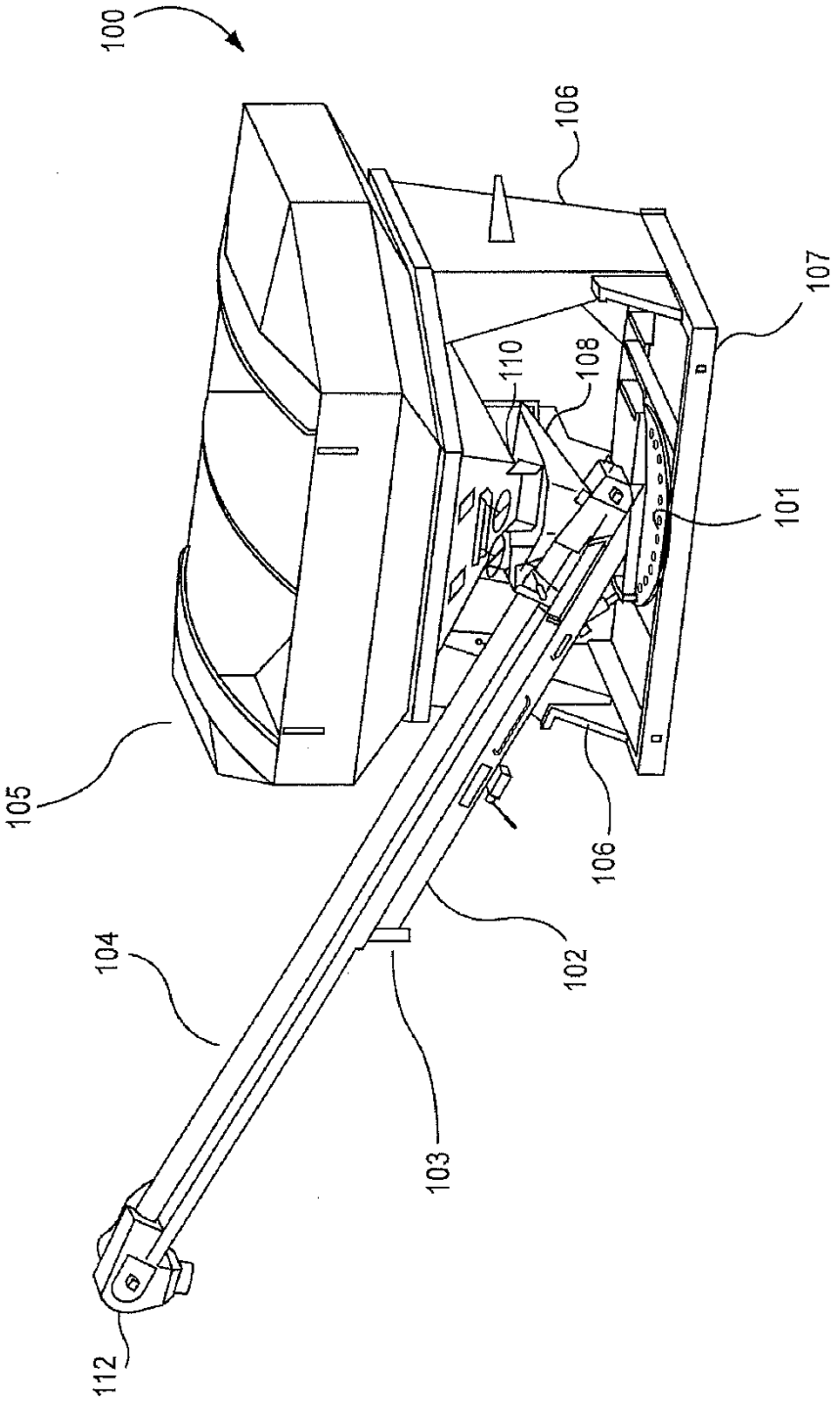

FIG.1

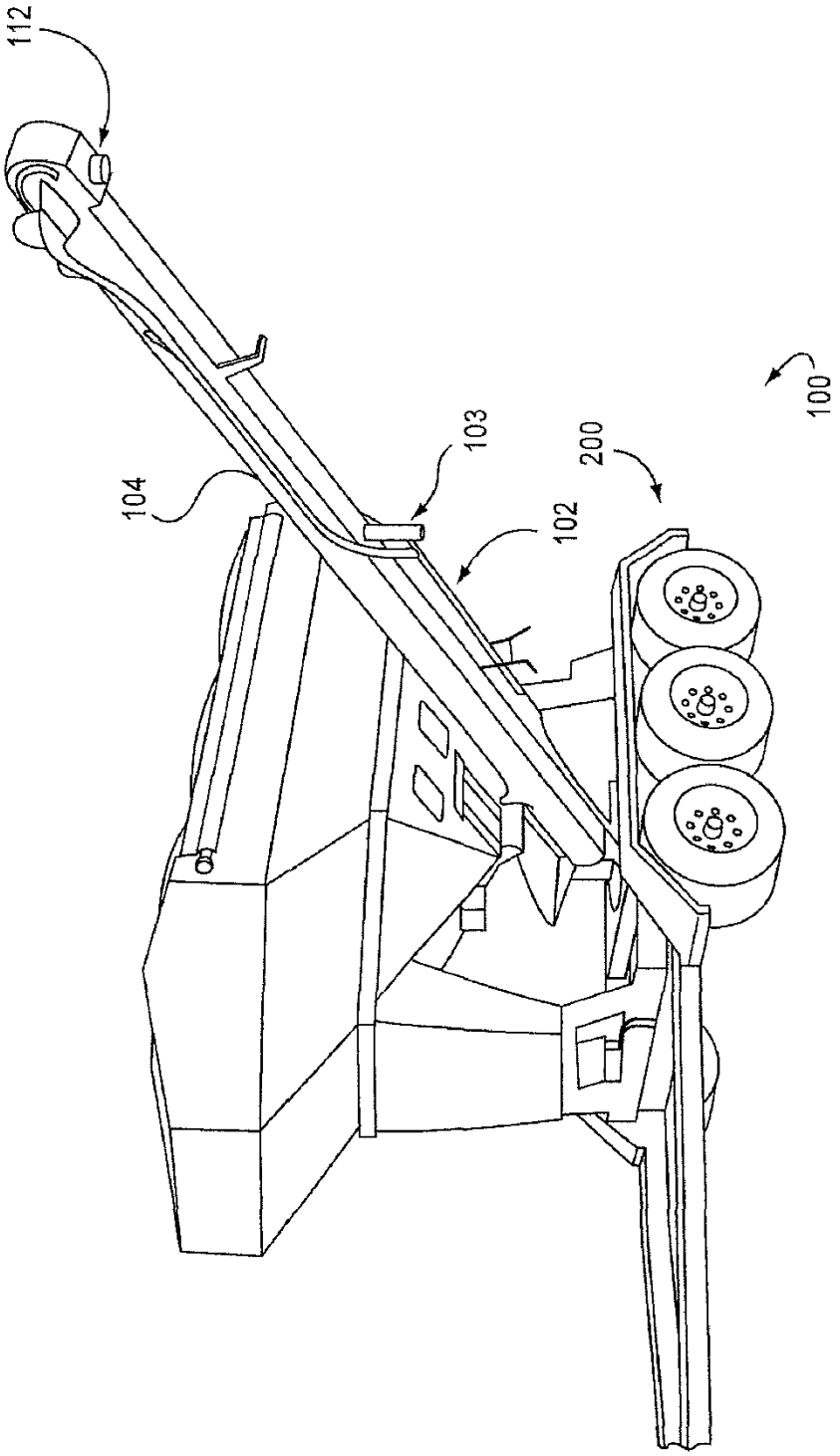

FIG.2

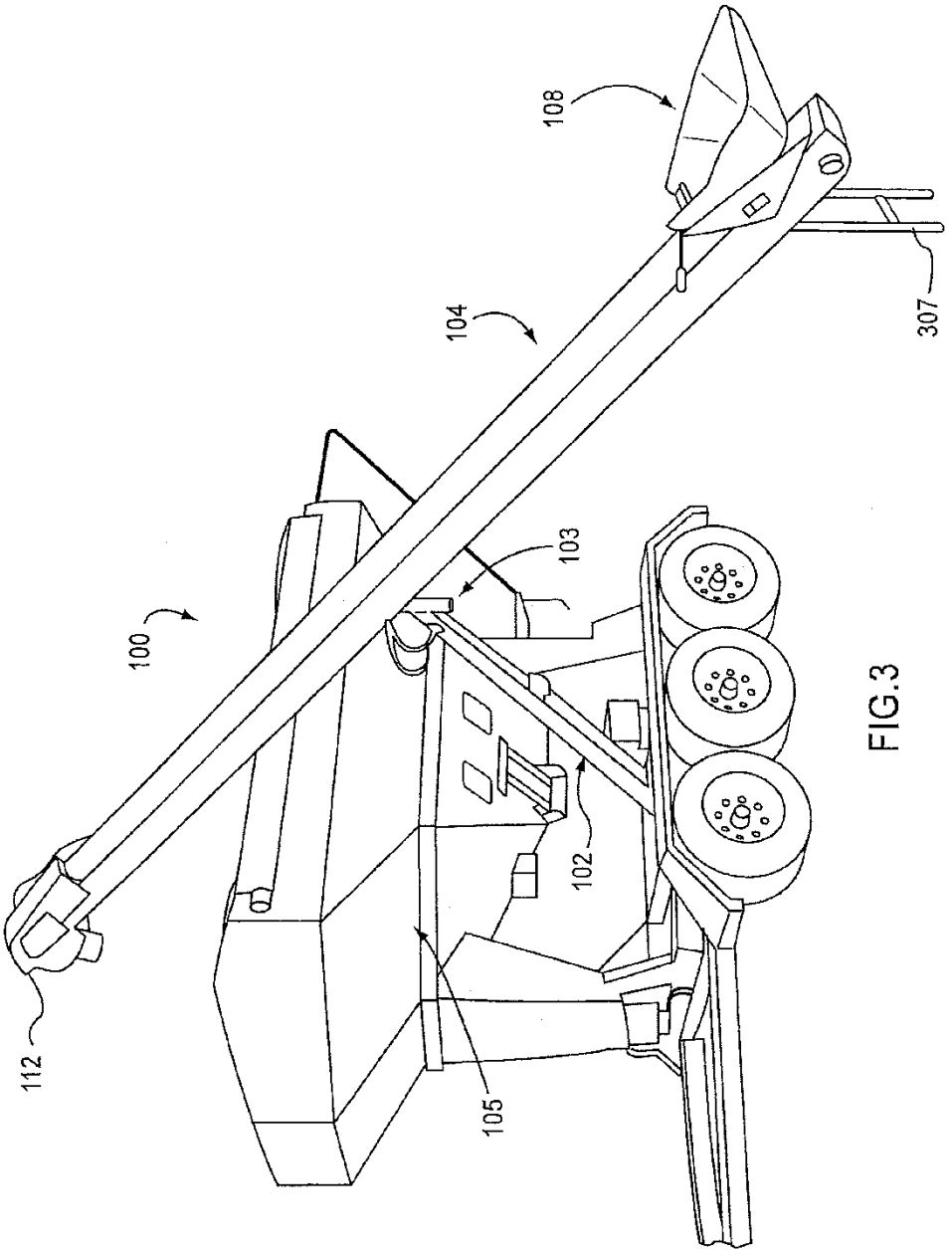

FIG.3

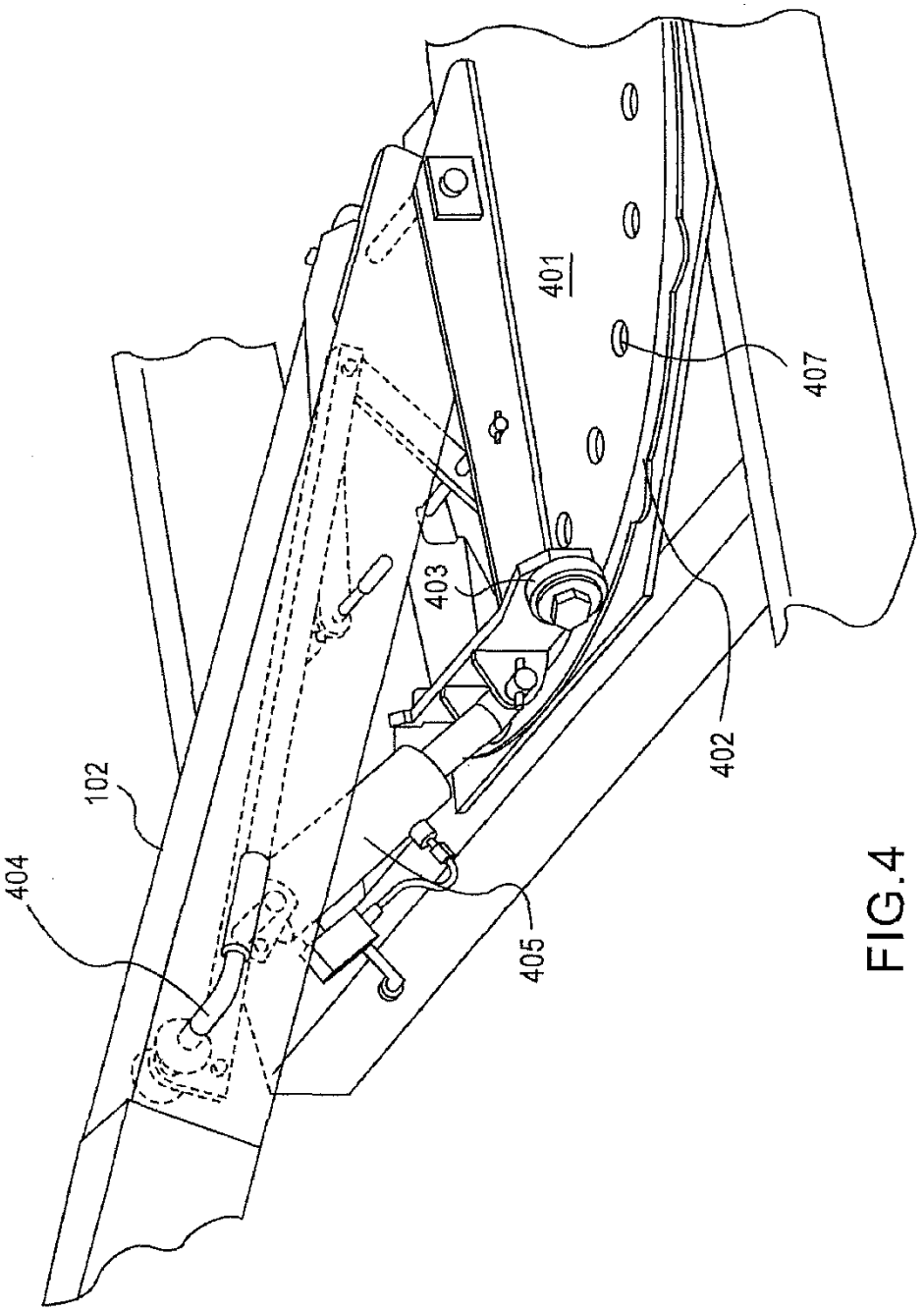

FIG.4

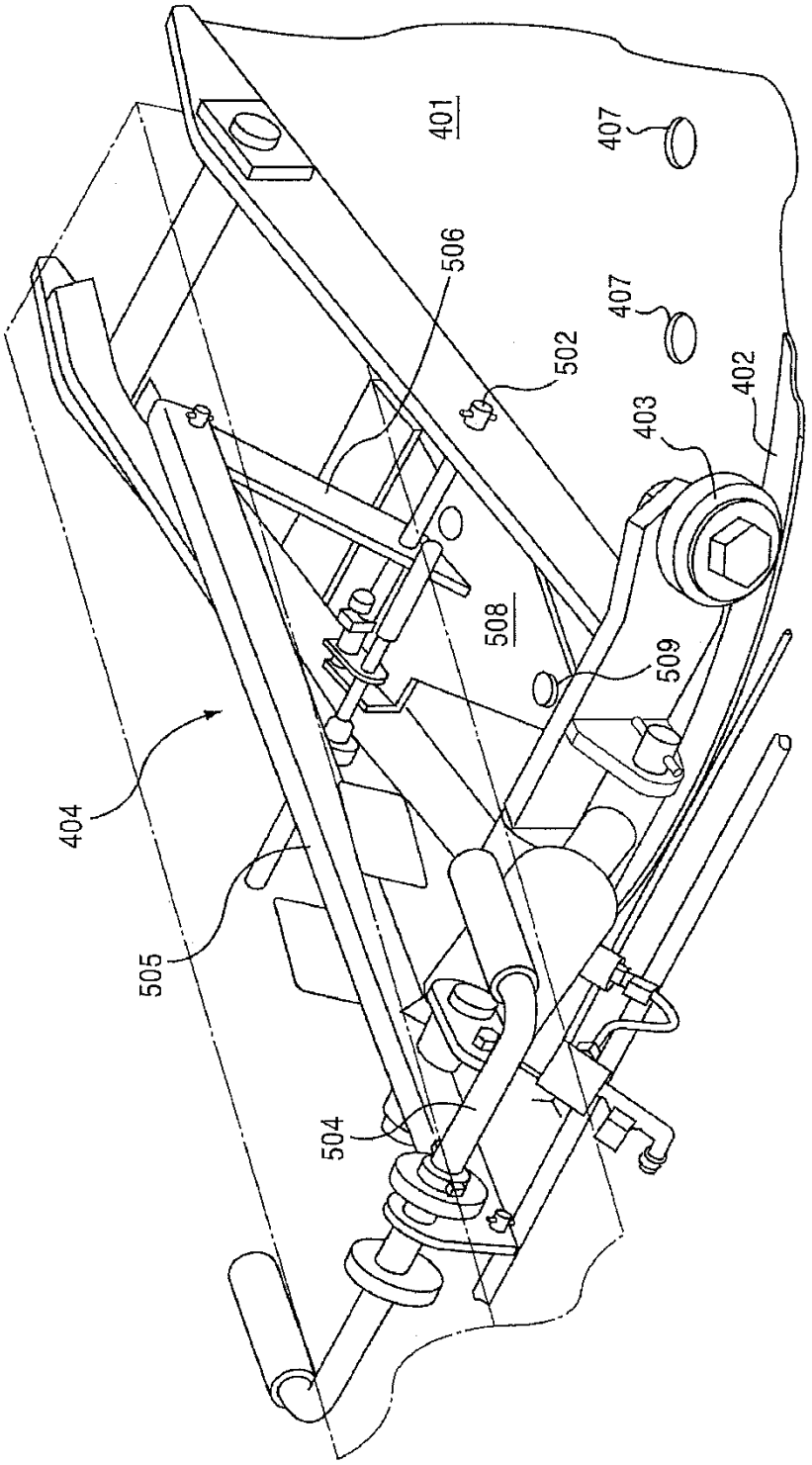

FIG.5

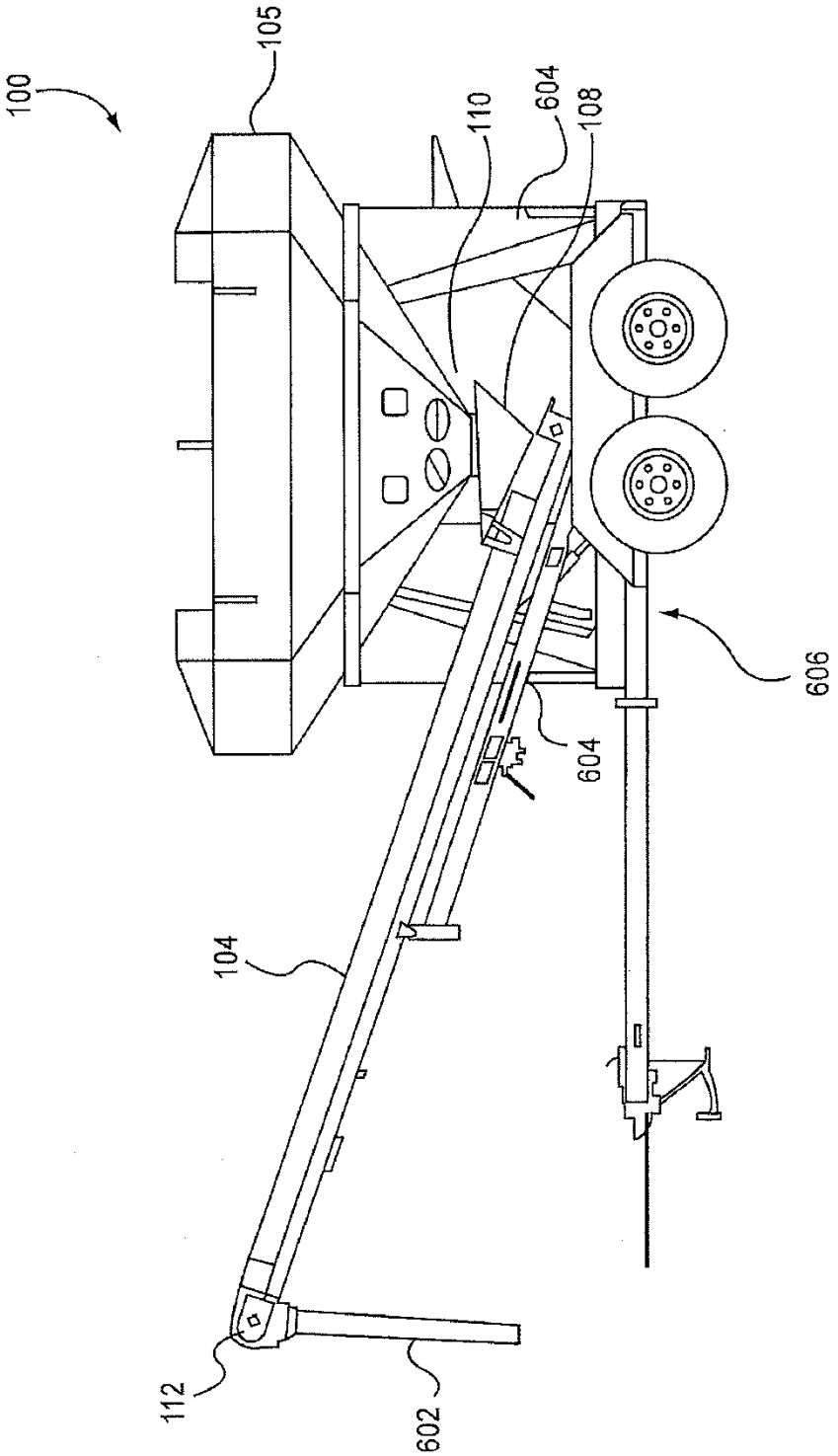

FIG.6

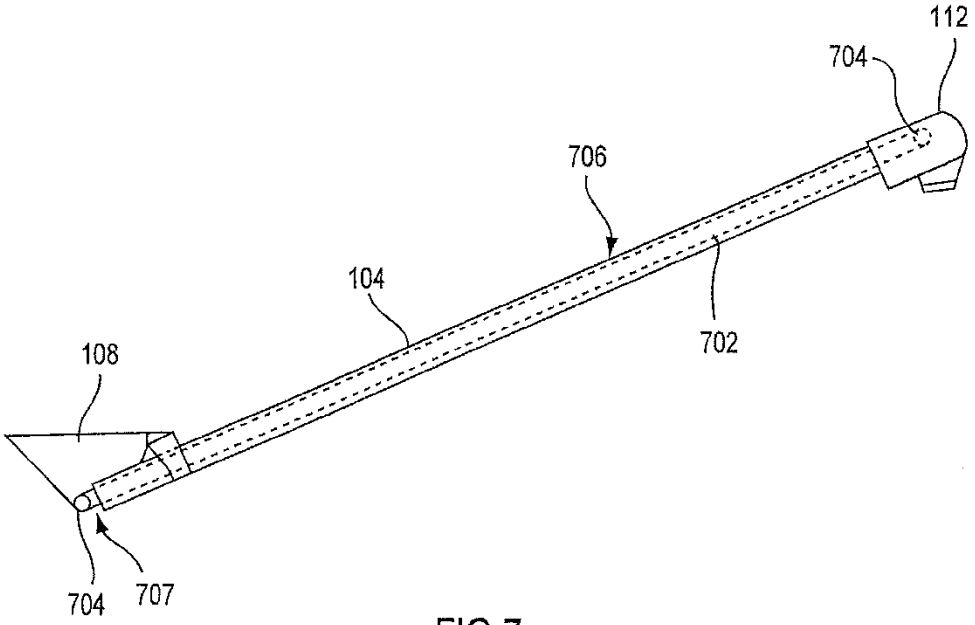

FIG.7

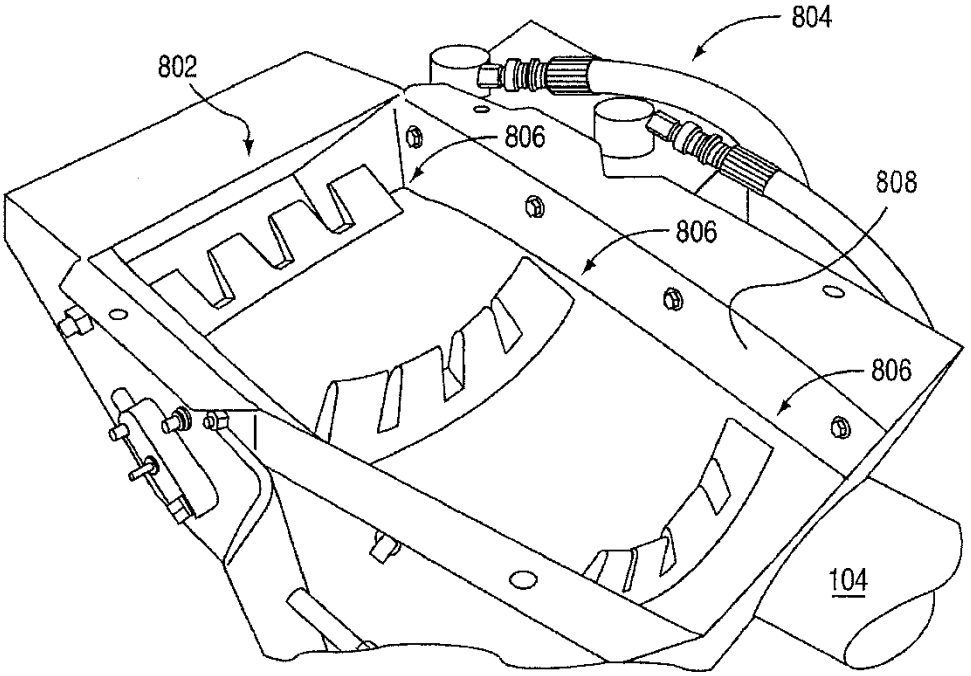

FIG.8

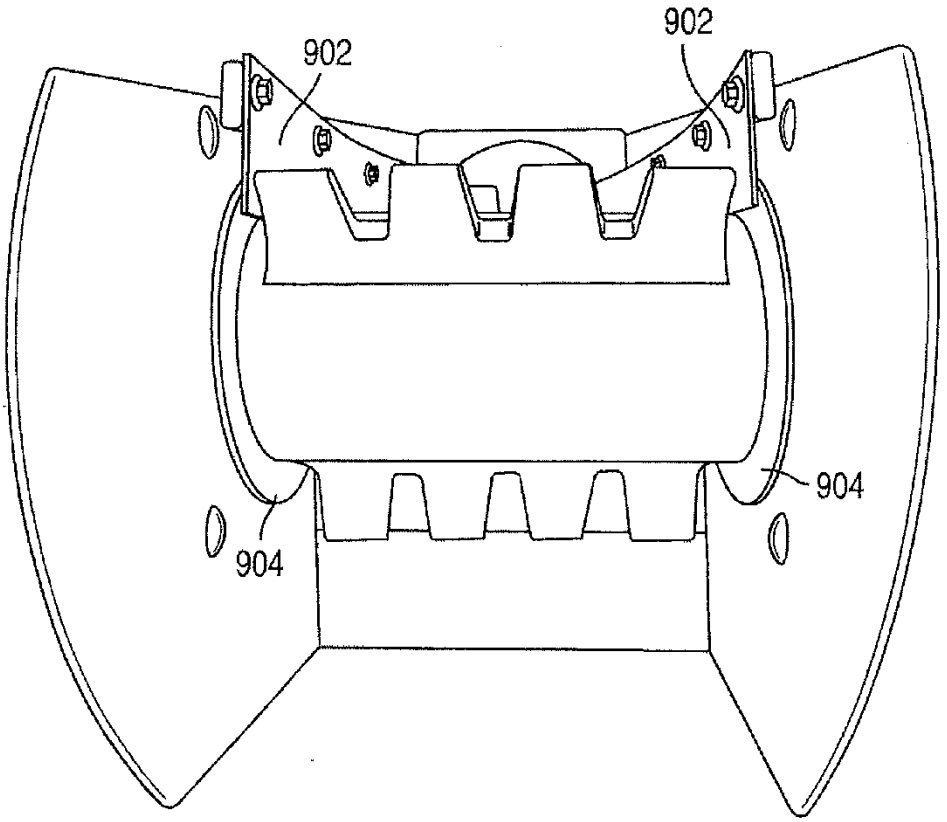

FIG.9

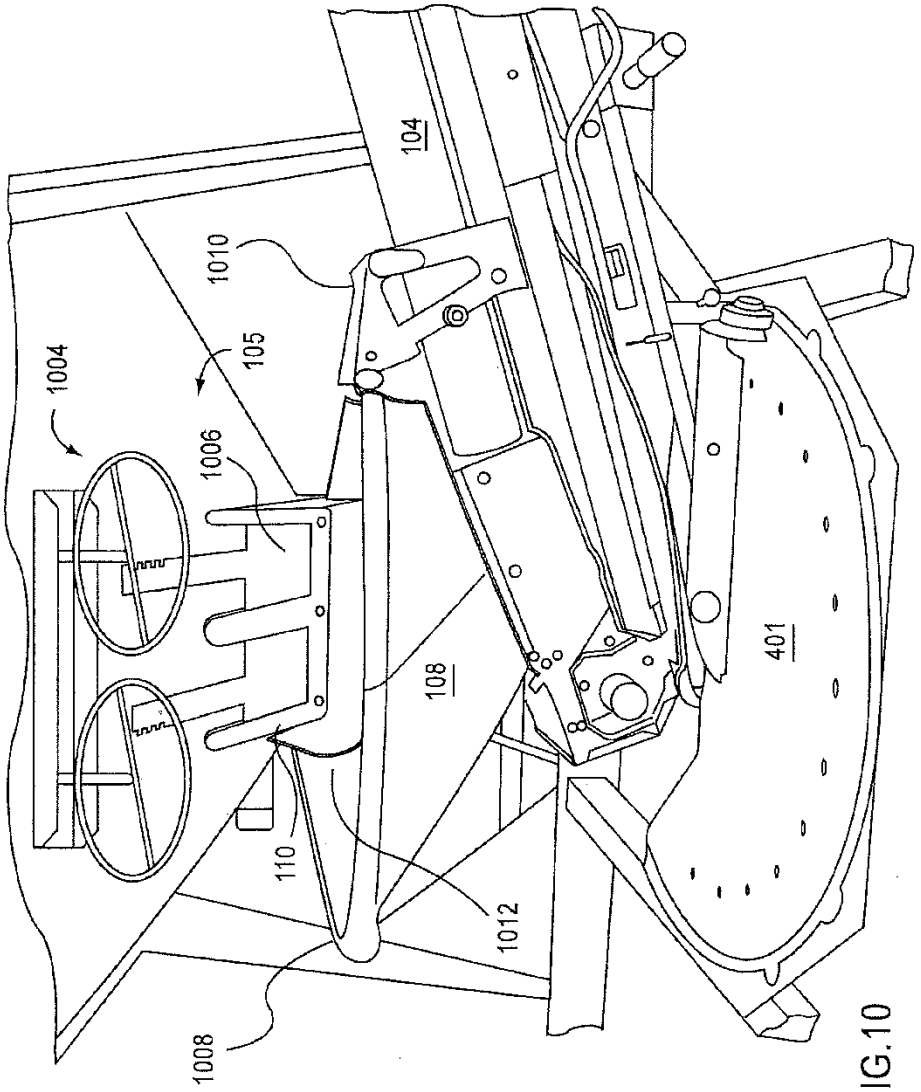

FIG.10

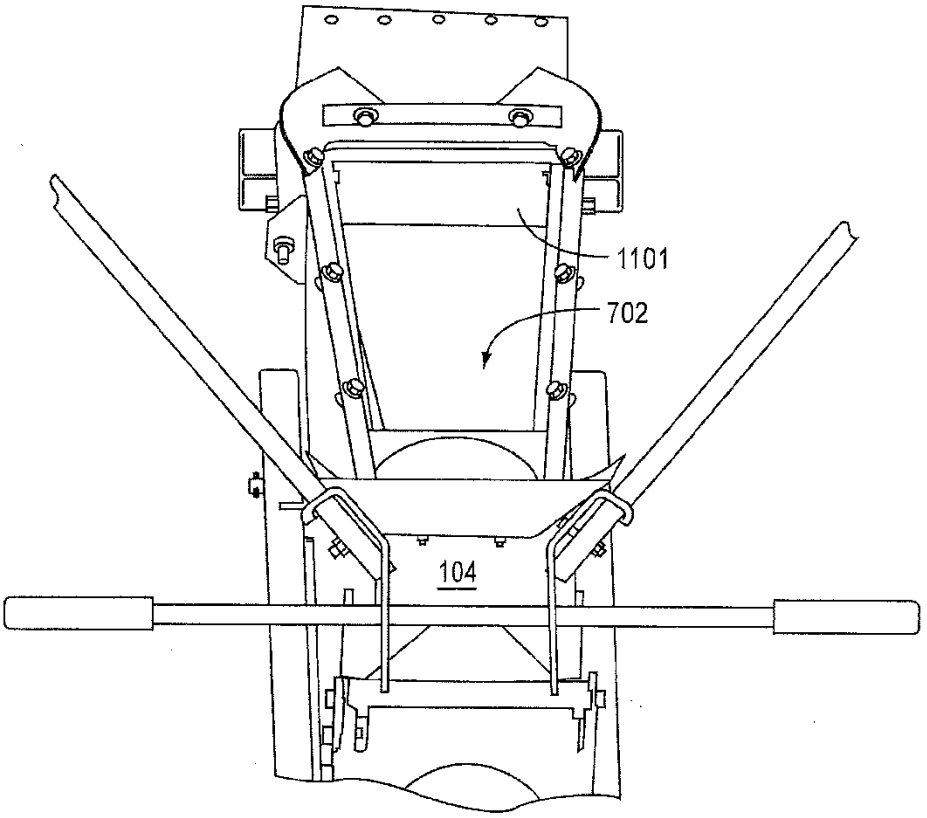

FIG.11

SEED CARRIER WITH PIVOTING CONVEYOR

CROSS-REFERENCE TO RELATED APPLICATION

The present application claims priority to Provisional Patent Application Ser. No. 60/901,321 filed on Feb. 15, 2007, the entire disclosure of which is incorporated herein by reference.

BACKGROUND OF THE INVENTION

1. Field of the Invention

The present invention relates generally to a conveyor system for a grain or seed carrier. The conveyor system includes a novel pivot system that allows it to either load or unload a container by pivoting it into a loading or unloading position.

2. Description of the Related Art

Conveyor systems for moving grain, seed, etc. are well known. Auger systems are used to rapidly move grain such as feed or the like, while belt driven conveyors are often used for moving more expensive payload, such as seed.

One belt driven conveyor system includes a generally flat belt constructed from a flexible, sturdy material such as rubber or nylon. The conveyor is housed in a tube with rollers on both ends so that the belt may rotate in order to transmit material from one end to the other. Such conveyors are used for unloading seed carriers or the like. However, current conveyors have several problems.

First, current conveyors have the problem that the material being moved can be damaged by the rollers. Second, current conveyors do not have a full range of motion as implemented in seed carries. Third, current conveyors are only implemented for unloading.

There is a need for new and improved conveyor systems that allow a wagon to be unloaded and loaded using a single mechanism.

SUMMARY OF THE INVENTION

According to an embodiment of the present invention, a seed tender or carrier is provided that includes a main hopper for holding seed and a conveyor for transferring seed to and from the main hopper.

According to an embodiment of the present invention, in an unloading position, one end of the conveyor may be positioned under the discharge of the main hopper and coupled with a pivoting support arm. In the unload position, the conveyor can be used to transfer seed from the main hopper to another location, such as to a planter, seeding unit, or the like. A pivot mechanism allows the conveyor to be rotated from under the box into a loading position in which the conveyor intake can rest on the ground or on a stand while the conveyor discharge is positioned to allow conveyed material to be discharged into the main hopper. In this loading position, the conveyor can be used to fill the main hopper.

According to an embodiment of the present invention, a conveyor hopper is provided on the intake side of the conveyor.

According to an embodiment of the present invention, the pivot mechanism allows the conveyor to swing from side to side to simplify unloading of the main hopper and the filling of planters, etc. The pivot mechanism can include a hydraulic cylinder that adjusts the vertical height of the conveyor discharge relative for different filling applications.

According to an embodiment of the present invention, a pivot single pivot point can be provided at one end of the support arm to allow the conveyor to be rotated between the loading and unloading position. The conveyor may be balanced on the pivot point at a location near or at the center of gravity, thereby permitting the conveyor to be rotated with minimal effort on the part of the operator.

According to an embodiment of the present invention, the conveyor can be rotated through at least 180 degrees about a vertical axis and so that it may be positioned in either a forward or rearward transport position. This feature enables the tender to be pulled by different vehicles such as by a pick-up truck with the conveyor forward or by a grain truck with the conveyor rearward.

Further applications and advantages of various aspects and embodiments of the present invention are discussed below with reference to the drawing figures.

BRIEF DESCRIPTION OF THE DRAWINGS

FIG. **1** illustrates a seed carrier according to an embodiment of the present invention.

FIG. **2** is a view of a seed carrier in an unloading position according to an embodiment of the present invention.

FIG. **3** is a view of a seed carrier in a loading position according to an embodiment of the present invention.

FIG. **4** is a view of a base system for the seed carrier according to an embodiment of the present invention.

FIG. **5** is a view of a lever mechanism for the base system according to an embodiment of the present invention.

FIG. **6** is a view of a seed carrier in a transport position according to an embodiment of the present invention.

FIG. **7** is a view of a belt conveyor for the seed carrier according to an embodiment of the present invention.

FIG. **8** is a view of the discharge end of a conveyor according to an embodiment of the present invention.

FIG. **9** is a forward view of a conveyor belt wrapping around a roller according to an embodiment of the present invention.

FIG. **10** is a view of the conveyor hopper in an unloading position according to an embodiment of the present invention.

FIG. **11** illustrates the receiving end of the conveyor according to one embodiment of the present invention.

DETAILED DESCRIPTION OF THE PREFERRED EMBODIMENTS

While the present invention may be embodied in many different forms, a number of illustrative embodiments are described herein with the understanding that the present disclosure is to be considered as providing examples of the principles of the invention and such examples are not intended to limit the invention to preferred embodiments described herein and/or illustrated herein.

In embodiments of the present invention, the novel conveyor pivot system can be implemented with seed carrier or seeding machines. The following section describes non-limiting examples of illustrative seeding equipment according to embodiments of the present invention. It should be appreciated that the following examples are provided for illustration and the present invention is not intended to be limited to the embodiments described herein.

FIG. **1** is a diagram depicting a seed carrier having a tube conveyor according to an embodiment of the present invention. The seed carrier **100** includes a main hopper **105** coupled to a frame **107** by legs **106**. A conveyor **104** is supported by a support arm **102** coupled with a pivoting mechanism **101**

fixed to the frame **107**. The conveyor **104** is pivotably coupled with the support arm by a coupling **103** at a point that is preferably near or at the center of gravity of the conveyor **104**. The conveyor **104** is also coupled to the support arm **102** by a latch (not shown) at the bottom of the conveyor. The latch allows the conveyor **104** to be uncoupled from the support arm **102** at the bottom so that the conveyor is free to rotate about the coupling **103**. By positioning the coupling **103** at or near the center of gravity of the conveyor **104**, the conveyor **104** balances on the pivoting coupling **103** such that little effort is required to rotate the conveyor **104**.

The conveyor **104** includes a conveyor hopper **108** at its base, which is shown in the unloading position below the gravity discharge **110** of the main hopper **105**. At the other end of the conveyor **104** is the discharge **112**. Seed can be gravity feed from the main hopper **105** into the conveyor hopper **108**, which can then be moved to the discharge **112** of the conveyor **104** by an internal elevator (not shown). In one embodiment, the elevator is a motor-driven belt type elevator coupled onto rollers at both ends of the conveyor.

The seed carrier **100** may be transported by conventional means such as on a trailer. FIG. **2** illustrates the seed carrier **100** on a three axle trailer **200** according to an embodiment of the present invention. As shown, the conveyor **104** is in the unloading position.

FIG. **3** illustrates the seed carrier **100** in the loading position. As shown, the conveyor **104** is uncoupled from the support arm **102** at its base and rotated 180 degrees about pivot coupling **103** so that the conveyor hopper **108** is positioned at a convenient location away from the carrier while the discharge **112** of the conveyor **104** is located over the main hopper **105**. A stand **307** is provided for holding the conveyor hopper **108** in place. The stand **307** may be integrated with the conveyor **104**.

Accordingly, in the loading position, grain, seed or like can be feed into the conveyor hopper **108** to be moved to the discharge **112** for filling the main hopper **105**.

FIG. **4** is a view of the pivoting base of the support arm **102**. As shown, the support arm **102** can be pivotably coupled to a base **401** at a center point so that the support arm **102** is rotatable about a vertical axis. Wheels **403** provide support and can run along a track **402** to facilitate the support arm's **102** motion about the perimeter of the base **401**. The support arm **102** can be locked into a selected position of the base **401** by engaging a pin (not shown) with one of a plurality of the holes **407** distributed around the base **401**. The pin is disengaged with a hole by actuating a lever mechanism **404**, which lifts the pin out of a hole. The lever mechanism **404** may be spring actuated to bias the pin toward the holes, so that simply releasing the lever will allow the pin to engage with one of the holes **407**. Also shown, a hydraulic piston **405** is coupled with the support arm **102** for adjusting the height of the support arm **102**.

FIG. **5** is an alternative view of the support arm base. As shown, lever mechanism **404** includes a handle **504** coupled with a cross-bars **505** and **506**. Cross-bar **506** is coupled to cross-bar **505** on one end and to a plate **508** having a pin **509** on the other end, and with a pivoting coupling **502** at a point near the plate. Rotating the handle **504** applies a downward force to crossbar **506** causing it to rotate about the coupling **502** to raise the plate **508** to disengage the pin **509**. While disengaged, the base **401** is free to rotate about its vertical axis. Springs may be provided for biasing the pin **509** toward the holes **407** for engaging therewith, or the pin **509** can be engaged by gravity.

FIG. **6** is a side view of a seed carrier **100** according to an embodiment of the present invention. As shown in FIG. **6**, the conveyor **104** includes an elongated discharge spout **602** and is positioned in a transport position. Support members **604** may be mounted on or integral with the legs **106** for holding the conveyor **104** in a forward transport position as shown, or a rearward transport position. As shown, the carrier **100** is fixed to a dual axle trailer **606**.

FIG. **7** illustrates a basic belt driven conveyor according to an embodiment of the present invention. The conveyor **104** comprises a belt **702** that winds about a pair of rollers **704**. The rollers are positioned outside a tube section **706**, a first roller being positioned in the discharge **112** and a second roller being positioned below the conveyor hopper **108**. A motor (not shown) or other means for turning the rollers may be provided at either end of the conveyor. A void **707** exists below the rollers **704** to allow the belt **702** to travel on its return path.

FIG. **8** is a view of a conveyor belt according to an embodiment of the present invention. The discharge end of a conveyor is shown where a conveyor belt wraps around a motor driven roller **802**. The motor may be a hydraulic motor and therefore, hydraulic hoses **804** provide hydraulic fluid flow to and from the motor. Teeth **806** are provided to push grain or seed up the conveyor. As shown, the conveyor belt is cupped in the tube section but flattens out as it reaches the roller **802**. Channeling members (seals) **808** are provided on each side of the belt to form a seal and prevent grain or seed from falling off the edges of the belt as the belt begins to conform to the tubular portion of the conveyor **104**.

FIG. **9** is a front view of the belt as it travels over the roller **802**. Channeling members (seals) **902** are provided on each side of the belt to form a seal and prevent grain or seed from falling off the edges of the belt as the belt flattens at the roller. As shown, the channeling members **902** are fixed to the conveyor discharge **112** with bolts, but can be fixed by other means or can be integral with the discharge.

Discs **904** are provided at the rollers at the edge of the belt to provide additional channeling/sealing means. The discs **904** are preferably integral with the rollers or coupled therewith so that they may rotate.

FIG. **10** is a side view of the hopper end of the conveyor **104**. As shown, conveyor hopper **108** sits above in ingress **1003** to the conveyor **104**. When coupled to the support arm **102**, as shown, the conveyor hopper **108** is positioned below a discharge of the main hopper **106**. The discharge **110** may be opened by conventional means. As showed, a wheel handle mechanism **1004** is provided for opening the discharge doors **1006**.

The conveyor hopper **108** is preferably manufactured from light weight materials such as plastic, canvas, rubber or vinyl. As shown, the hopper **108** may include a mechanism for opening and closing the hopper. In this embodiment, flexible coupling or hinge is provided at one end **1008** of the hopper **108** and a mechanism **1010** is provided at the end of the hopper **108** and is coupled with the conveyor **104**, such that the hopper **108** may be made to have an appropriate fit with the discharge **110** of the main hopper **105**. A flap **1012** can be provided at the bottom of the discharge **110**.

FIG. **10** is a side view of the hopper end of the conveyor **104**. As shown, conveyor hopper **108** sits above in ingress to the conveyor **104**. When coupled to the support arm **102**, as shown, the conveyor hopper **108** is positioned below a discharge of the main hopper **106**. The discharge **110** may be opened by conventional means. As showed, a wheel handle mechanism **1004** is provided for opening the discharge doors **1006**.

One will understand that hydraulic power can be provided by a towing vehicle, such as a tractor or the like or alterna-

tively, hydraulic power can be provided on the tender and driving electrically from the towing vehicle, such as a truck.

Thus, a number of preferred embodiments have been fully described above with reference to the drawing figures. Although the invention has been described based upon these preferred embodiments, it would be apparent to those of skill in the art that certain modifications, variations, and alternative constructions could be made to the described embodiments within the spirit and scope of the invention

We claim:

1. A seed or grain tender comprising:

a frame;

a main hopper mounted on said frame and having a main hopper discharge;

a base mounted on said frame below said main hopper discharge;

a support arm having first and second ends;

a first coupling connecting said first end of said support arm with said base, said first coupling being rotatable in relation to said base about a first vertical axis of rotation, and said first end of said support arm being rotatable in relation to said first coupling about a first horizontal axis of rotation;

a conveyor having a longitudinal axis and first and second ends, a conveyor hopper at said first end, a conveyor discharge at said second end, and an internal elevator for moving seed or grain from said conveyor hopper to said conveyor discharge; and

a second coupling connecting said second end of said support arm with said conveyor at an approximate center of gravity of said conveyor, said second coupling defining a second vertical axis of rotation that is not parallel to said conveyor longitudinal axis, and said conveyor being rotatable in relation to said second end of said support arm about said second vertical axis of rotation between an unloading position wherein said conveyor hopper is disposed below said main hopper discharge to receive agricultural product from said main hopper and a loading position wherein said conveyor discharge is disposed above said main hopper to dispense agricultural product into said main hopper.

2. The seed or grain tender of claim 1, wherein said support arm extends upwardly at an acute angle from said base.

3. The seed or grain tender of claim 2, wherein said conveyor is parallel to said support arm in said unloading position.

4. The seed or grain tender of claim 3, wherein said conveyor is disposed above said support arm in said unloading position.

5. The seed or grain tender of claim 1, wherein said conveyor is rotatable in relation to said second coupling about a second horizontal axis of rotation.

6. The seed or grain tender of claim 5, wherein said second horizontal axis of rotation extends through said second coupling.

7. The seed or grain tender of claim 1, further comprising a stand coupled with said first end of said conveyor and movable between a stowed position allowing said conveyor hopper to be positioned below said main hopper discharge when said conveyor is in said unloading position and an extended position supporting said conveyor hopper above the ground when said conveyor is in said loading position.

8. The seed or grain tender of claim 1, wherein said first vertical axis extends through said first end of said support arm.

9. The seed or grain tender of claim 1, wherein said first vertical axis extends through said base.

10. The seed or grain tender of claim 1, wherein said second end of said support arm terminates at or near said approximate center of gravity of said conveyor.

11. The seed or grain tender of claim 1, wherein said first end of said support arm is fixed at a first height and said second end of said support arm is pivotable between a range of heights.

12. The seed or grain tender of claim 1, further comprising a lift device for adjusting a height of said second end of said support arm.

13. The seed or grain tender of claim 12, wherein said lift device is a pressurized cylinder.

14. The seed or grain tender of claim 12, wherein said lift device is a hydraulic cylinder.

15. The seed or grain tender of claim 1, wherein said first coupling is a U-shaped member with a horizontal base portion and a pair of upright portions, and wherein said first horizontal axis extends through said upright portions of said first coupling.

16. The seed or grain tender of claim 1, further comprising a locking mechanism for locking or unlocking said support arm in relation to said base.

17. The seed or grain tender of claim 16, wherein said locking mechanism includes a pin releasably engageable with one of a plurality of holes formed in said base.

18. The seed or grain tender of claim 17, wherein said pin is spring-biased toward said holes in said base.

19. The seed or grain tender of claim 17, wherein said internal elevator includes a motor-driven belt.

20. A seed or grain tender comprising:

a frame;

a main hopper mounted on said frame and having a main hopper discharge;

a base mounted on said frame below said main hopper discharge;

a support arm having first and second ends;

a first coupling connecting said first end of said support arm with said base, said first coupling being rotatable in relation to said base about a first vertical axis of rotation, and said first end of said support arm being rotatable in relation to said first coupling about a first horizontal axis of rotation;

a lift device extending from said base to a portion of said support arm between said first and second ends such that said support arm extends upwardly at an acute angle from said base;

a conveyor having a longitudinal axis and first and second ends, a conveyor hopper at said first end, a conveyor discharge at said second end, and a motor-driven elevator for moving seed or grain from said conveyor hopper to said conveyor discharge; and

a second coupling connecting said second end of said support arm with said conveyor at an approximate center of gravity of said conveyor, said second coupling defining a second vertical axis of rotation that is not parallel to said conveyor longitudinal axis, and said conveyor being rotatable in relation to said second end of said support arm about said second vertical axis of rotation between an unloading position wherein said conveyor hopper is disposed below said main hopper discharge to receive agricultural product from said main hopper and a loading position wherein said conveyor discharge is disposed above said main hopper to dispense agricultural product into said main hopper, wherein said conveyor is disposed parallel to and above said support arm in said unloading position; and

a locking mechanism for locking and unlocking said support arm in relation to said base.

21. The seed or grain tender of claim **20**, wherein said conveyor is disposed above said support arm in said unloading position.

22. The seed or grain tender of claim **20**, wherein said conveyor is rotatable in relation to said second coupling about a second horizontal axis of rotation.

23. The seed or grain tender of claim **22**, wherein said second horizontal axis of rotation extends through said second coupling.

24. The seed or grain tender of claim **20**, further comprising a stand coupled with said first end of said conveyor and movable between a stowed position allowing said conveyor hopper to be positioned below said main hopper discharge when said conveyor is in said unloading position and an extended position supporting said conveyor hopper above the ground when said conveyor is in said loading position.

25. The seed or grain tender of claim **20**, wherein said first vertical axis extends through said first end of said support arm.

26. The seed or grain tender of claim **20**, wherein said first vertical axis extends through said base.

27. The seed or grain tender of claim **20**, wherein said second end of said support arm terminates at or near said approximate center of gravity of said conveyor.

28. The seed or grain tender of claim **20**, wherein said first end of said support arm is fixed at a first height and said second end of said support arm is pivotable between a range of heights.

29. The seed or grain tender of claim **20**, wherein said lift device is a pressurized cylinder.

30. The seed or grain tender of claim **20**, wherein said lift device is a hydraulic cylinder.

31. The seed or grain tender of claim **20**, wherein said first coupling is a U-shaped member with a horizontal base portion and a pair of upright portions, and

wherein said first horizontal axis extends through said upright portions of said first coupling.

32. The seed or grain tender of claim **20**, wherein said locking mechanism includes a pin releasably engageable with one of a plurality of holes formed in said base.

33. The seed or grain tender of claim **32**, wherein said pin is spring-biased toward said holes in said base.

34. The seed or grain tender of claim **20**, wherein said internal elevator includes a motor-driven belt.

* * * * *

EXHIBIT B

US008967940B2

(12) **United States Patent**
Petersen et al.

(10) **Patent No.: US 8,967,940 B2**
(45) **Date of Patent: *Mar. 3, 2015**

(54) **SEED CARRIER WITH PIVOTING CONVEYOR**

(75) Inventors: **Brian James Petersen**, Ottawa, OH (US); **David Richard Smith**, Fort Jennings, OH (US)

(73) Assignee: **Unverferth Manufacturing Company, Inc.**, Kalida, OH (US)

(*) Notice: Subject to any disclaimer, the term of this patent is extended or adjusted under 35 U.S.C. 154(b) by 0 days.

This patent is subject to a terminal disclaimer.

(21) Appl. No.: **13/541,553**

(22) Filed: **Jul. 3, 2012**

(65) **Prior Publication Data**

US 2013/0004271 A1 Jan. 3, 2013

Related U.S. Application Data

(63) Continuation of application No. 12/031,867, filed on Feb. 15, 2008, now Pat. No. 8,221,047.

(60) Provisional application No. 60/901,321, filed on Feb. 15, 2007.

(51) **Int. Cl.**
B60P 1/00 (2006.01)
A01C 15/00 (2006.01)

(52) **U.S. Cl.**
CPC ***A01C 15/006*** (2013.01); *B60P 1/00* (2013.01); ***A01C 15/003*** (2013.01)
USPC **414/523**; 198/312

(58) **Field of Classification Search**
CPC B60P 1/00; B60P 1/36; B60P 1/42; B65G 41/002; B65G 41/005; B65G 41/008; B65G 67/02; A01C 15/003; A01C 15/006; A01D 90/00; A01D 90/02; A01D 90/10
USPC 414/523, 328, 329; 111/11; 198/312, 198/315, 316, 317, 318
See application file for complete search history.

(56) **References Cited**

U.S. PATENT DOCUMENTS

427,736 A * 5/1890 Bufkin 198/317
1,905,434 A * 4/1933 Boyer 414/328

(Continued)

OTHER PUBLICATIONS

Model 2300 Air System and the Model 4800 Air Drill, both made and sold by Concord, as illustrated in the Concod brochure, 12 pages, 1994.

(Continued)

Primary Examiner — Saul Rodriguez
Assistant Examiner — Glenn Myers
(74) *Attorney, Agent, or Firm* — Rothwell, Figg, Ernst & Manbeck, P.C.

(57) **ABSTRACT**

A seed carrier includes a main hopper coupled with a frame via leg members. The main hopper has a discharge. A base plate is coupled with the frame. A support arm is rotatably coupled with the base plate at a first end. A belt driven conveyor having a conveyor hopper at a first end and a discharge at a second end is rotatably coupled with a second end of said support arm at an approximate center of gravity thereof. A latch mechanism is provided for detachably coupling the first end of the conveyor with the first end of the support arm such that the conveyor hopper is position below the main hopper discharge. When the conveyor is uncoupled from the first end of the support arm, the conveyor can rotate to a loading position wherein the discharge thereof can be positioned over the main hopper.

23 Claims, 11 Drawing Sheets

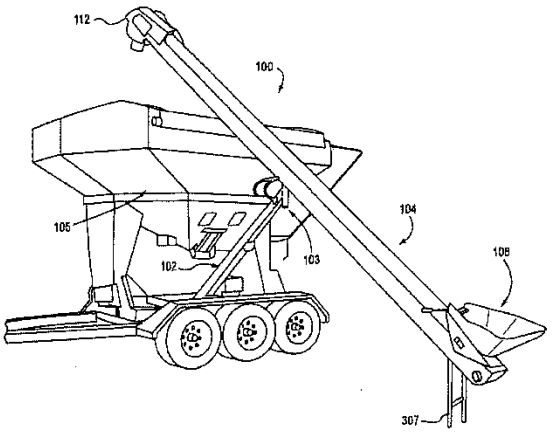

(56) **References Cited**

U.S. PATENT DOCUMENTS

3,090,515	A		5/1963	Crowther	
3,493,136	A		2/1970	Spellman, Jr.	
3,498,483	A	*	3/1970	Meharry	414/523
3,968,771	A	*	7/1976	Walgenbach et al.	118/303
3,994,512	A	*	11/1976	Parker et al.	280/687
3,997,215	A	*	12/1976	Parker et al.	298/24
4,037,745	A		7/1977	Hengen et al.	
4,218,169	A		8/1980	Arends	
4,274,790	A		6/1981	Barker	
4,312,621	A		1/1982	Quanbeck et al.	
4,411,581	A		10/1983	Niewold	
4,419,037	A		12/1983	Neiwold	
4,491,216	A		1/1985	Sawby	
4,503,803	A	*	3/1985	Barnes	118/303
4,613,275	A		9/1986	Karlowsky	
4,742,938	A		5/1988	Niewold	
5,013,208	A		5/1991	Grieshop	
5,468,113	A		11/1995	Davis	
5,484,249	A	*	1/1996	Klatt	414/523
5,516,253	A		5/1996	Linscheid et al.	
5,520,495	A	*	5/1996	Sukup	414/523
5,529,455	A		6/1996	Kaster et al.	
5,538,388	A		7/1996	Bergkamp et al.	
5,582,221	A		12/1996	Smith et al.	
5,615,990	A	*	4/1997	Grieshop	414/526
5,718,556	A	*	2/1998	Forsyth	414/503
5,785,481	A		7/1998	Ockels	
5,800,116	A	*	9/1998	Smith et al.	414/523
5,888,044	A	*	3/1999	Baskerville	414/523
5,980,189	A		11/1999	Rubner	
6,113,339	A		9/2000	Adams	
6,120,233	A	*	9/2000	Adam	414/502
6,209,880	B1	*	4/2001	Turnwald et al.	277/402
6,325,588	B1	*	12/2001	Nolin	414/526
6,604,620	B2	*	8/2003	Dennis	198/312
6,767,174	B2	*	7/2004	Cresswell	414/523
6,908,380	B2		6/2005	Silver	
7,223,059	B2		5/2007	Smith et al.	
7,267,519	B2		9/2007	Cresswell et al.	
7,393,275	B2		7/2008	Voss et al.	
7,428,956	B2	*	9/2008	Scherman	198/312
7,488,149	B2	*	2/2009	Waldner	414/532
7,500,814	B2		3/2009	Meyer	
7,500,817	B2	*	3/2009	Furrer et al.	414/522
7,553,228	B2		6/2009	Dillon	
8,221,047	B2	*	7/2012	Petersen et al.	414/523
2003/0057055	A1	*	3/2003	Haukaas et al.	198/313
2006/0180062	A1		8/2006	Furrer et al.	
2009/0110524	A1	*	4/2009	Hoffmann	414/507

OTHER PUBLICATIONS

Convey-All, BTS 290 Seed Tender Product Specification, 2 pages, Jun. 6, 2006.

Convey-All Ind. Inc., Engineering Drawings of BT-1500, 4 pages, May 13, 2002.

Par-Kan Company, Engineering Drawings, 2 pages, Apr. 28, 2003.

Great Plains Manufacturing, Inc., Parts Manual—Model ADC2220 Air Drill Cart, May 1, 1997, 61 pages.

Great Plains Manufacturing, Inc., Parts Manual—Model ADC2220 Air Drill Cart, Mar. 1, 2000, 69 pages.

Reexamination File History for Control No. 95000691, 374 pages.

Order Denying Request for Inter Panes Reexamination for Control No. 95000691, Nov. 7, 2012, 15 pages.

Par-Kan Company, Final Invalidity Contentions submitted in *Unverferth Mfg. Co., Inc.* v. *Par-Kan Co.*, Civil Action No. 13-cv-00097 (N.D. Ind.), Oct. 25, 2013, 130 pages.

Par-Kan Company, Preliminary Invalidity Contentions submitted in *Unverferth Mfg. Co., Inc.* v. *Par-Kan Co.*, Civil Action No. 13-cv-00097 (N.D. Ind.), Jun. 17, 2013, 169 pages.

Declaration of Shawn Gerdeman with Exhibits A-E dated Sep. 18, 2014, 24 pages.

* cited by examiner

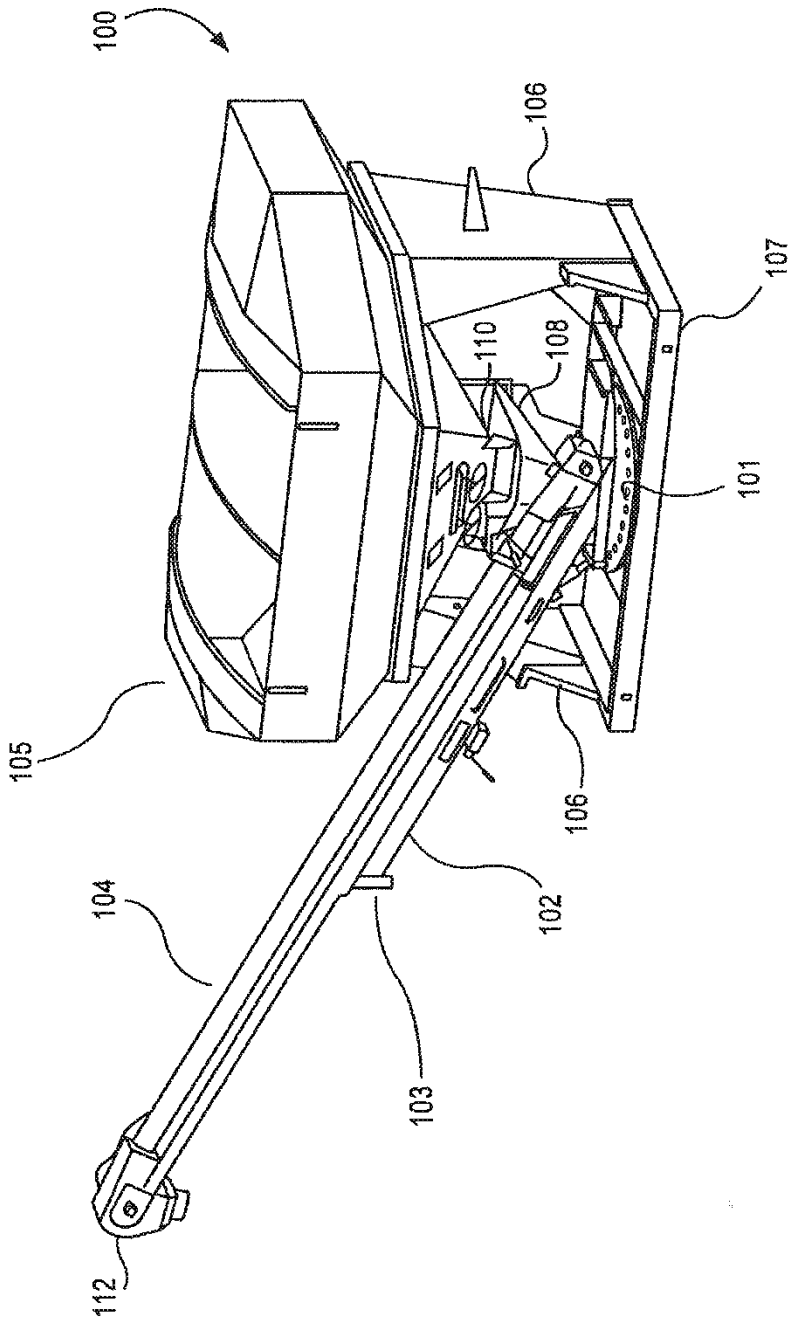

FIG. 1

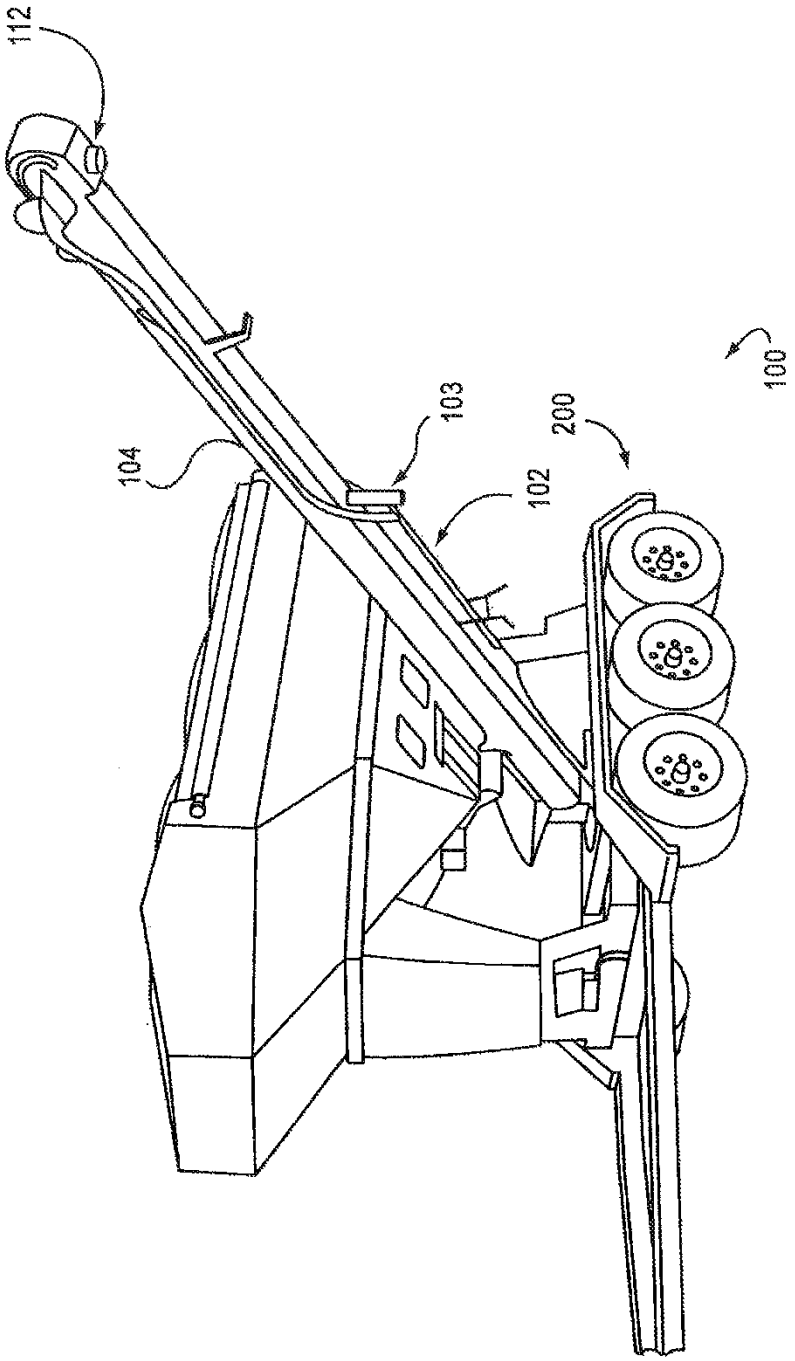

FIG.2

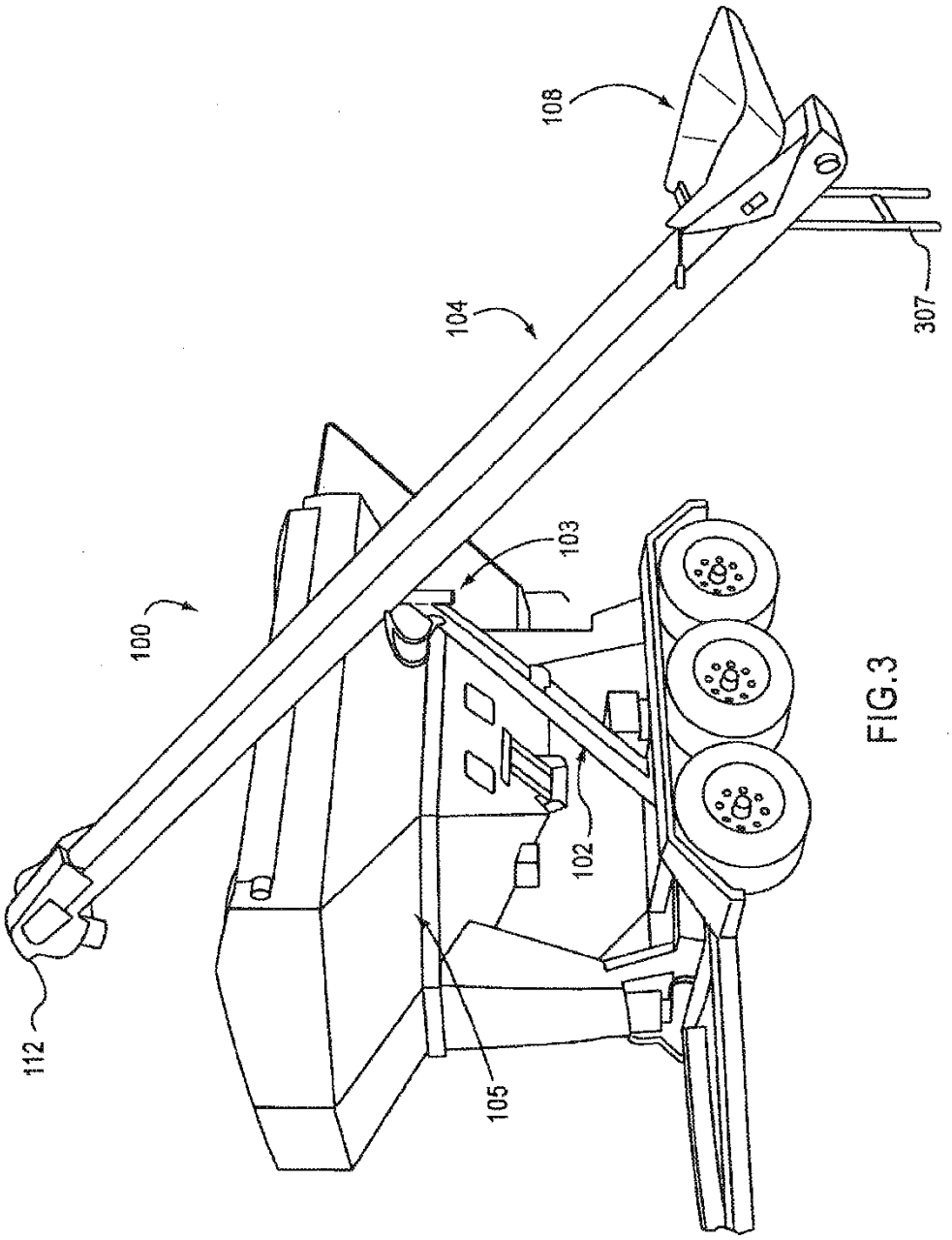

FIG.3

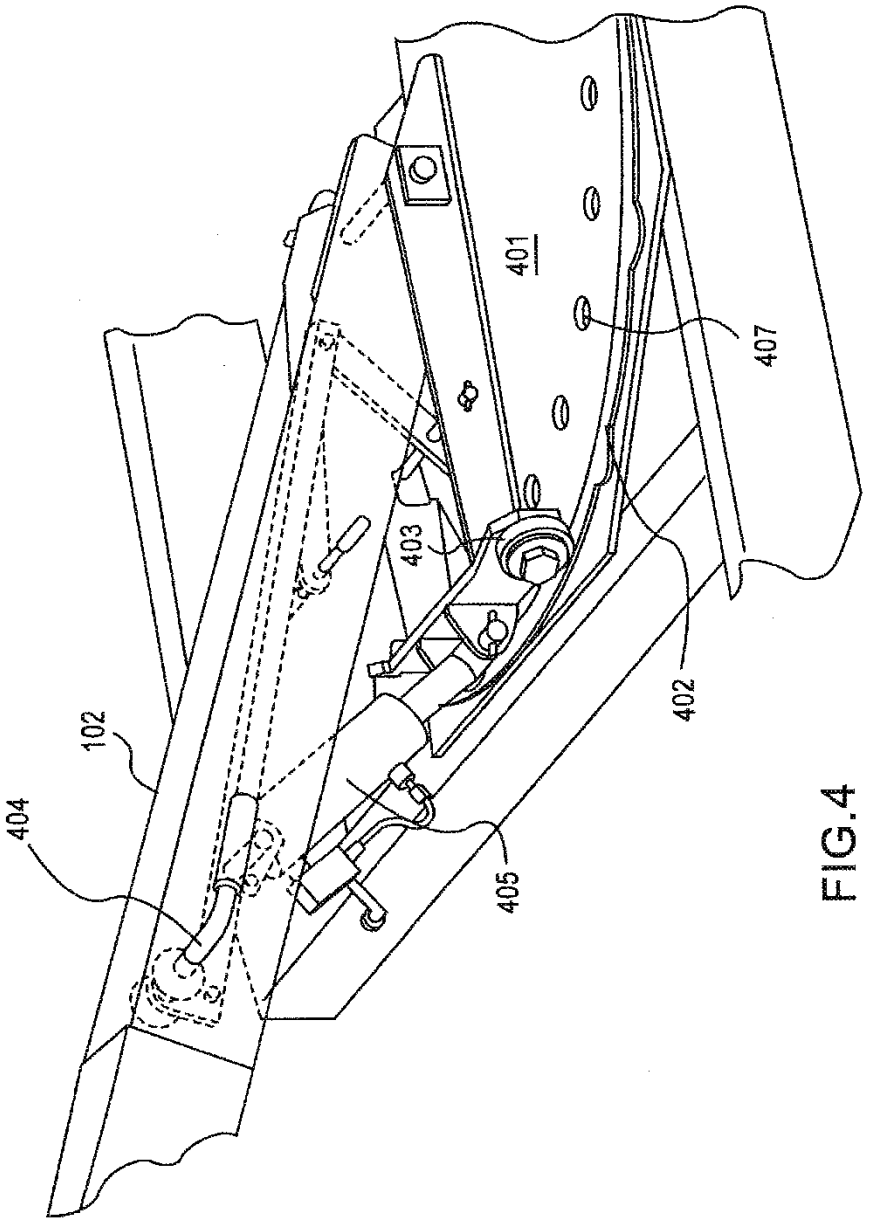

FIG.4

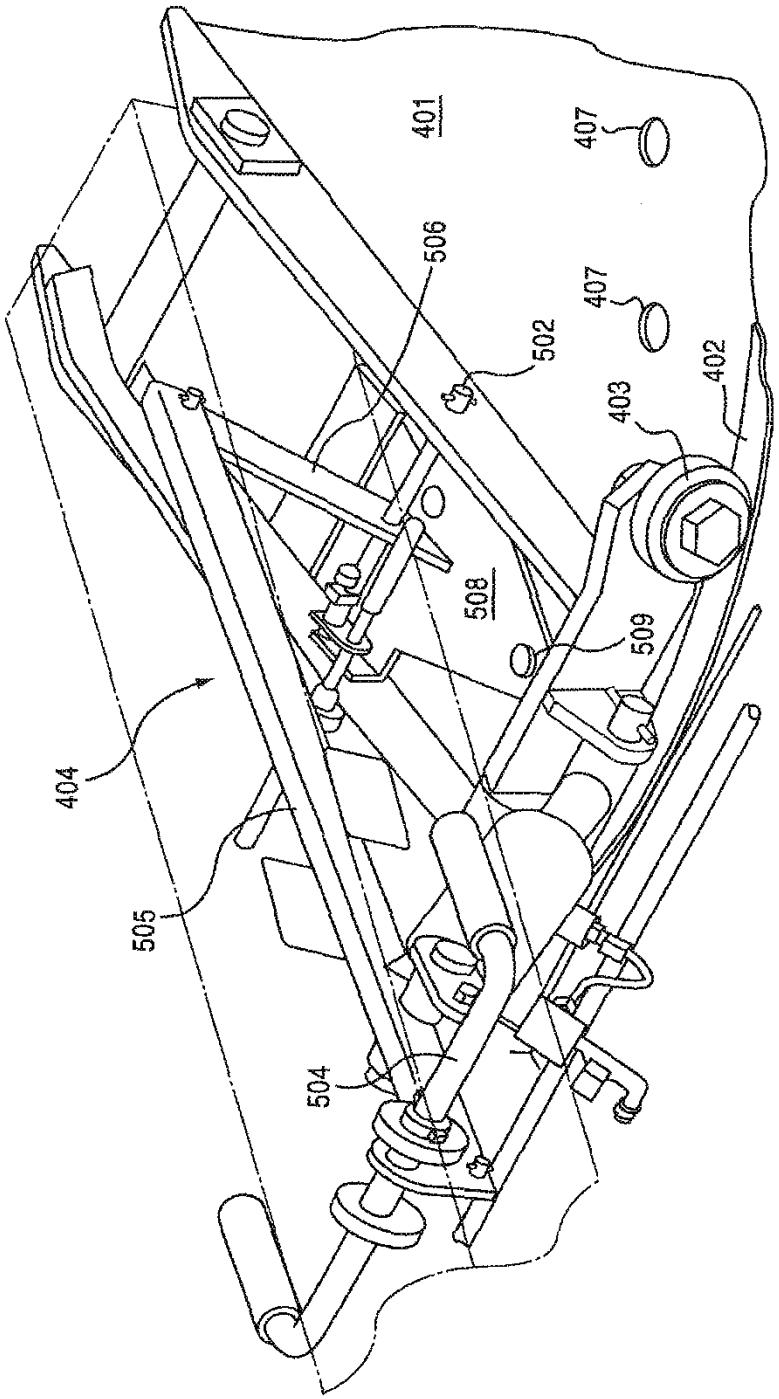

FIG.5

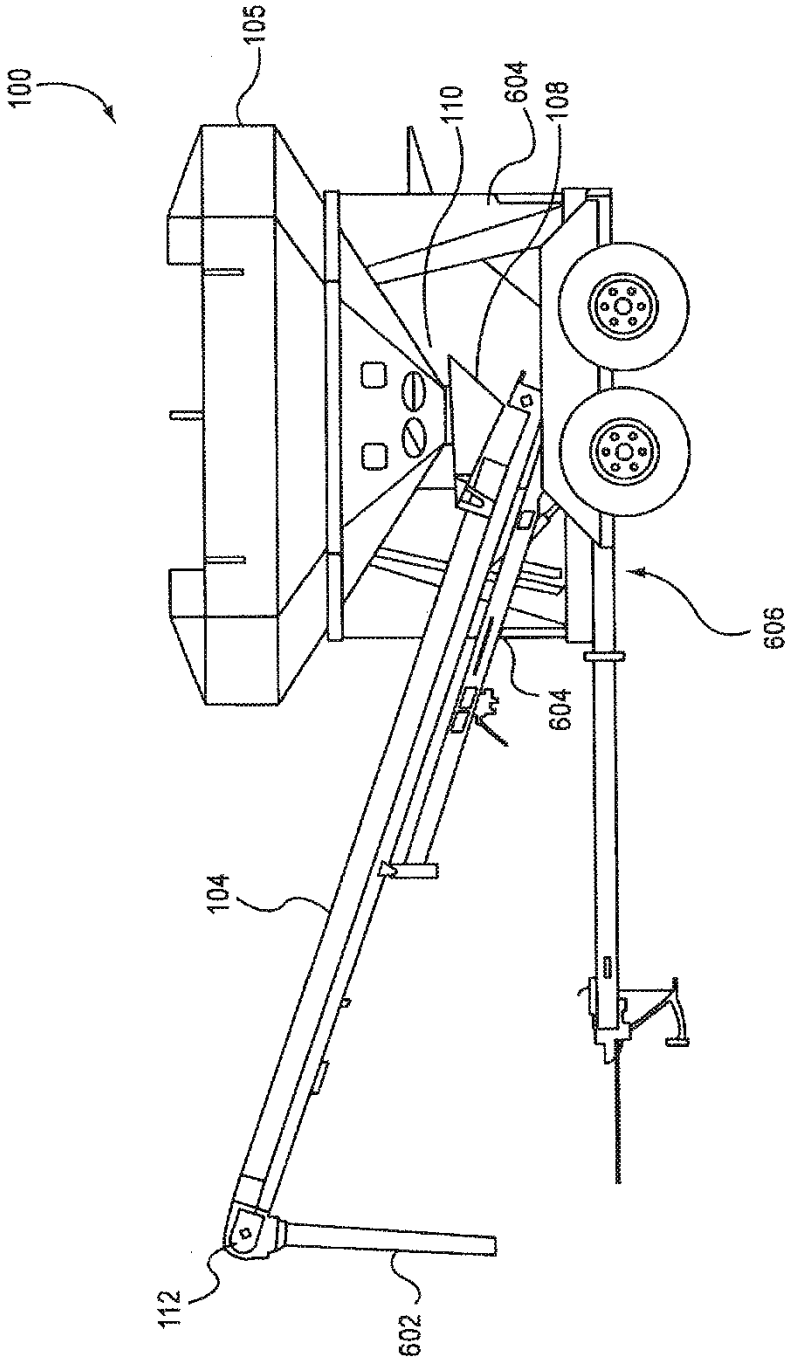

FIG.6

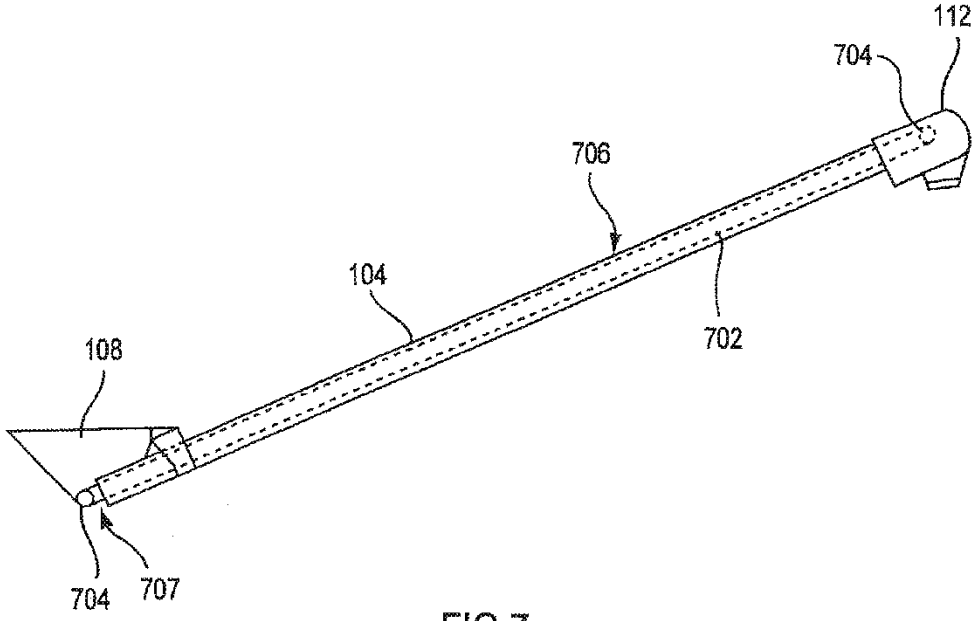

FIG.7

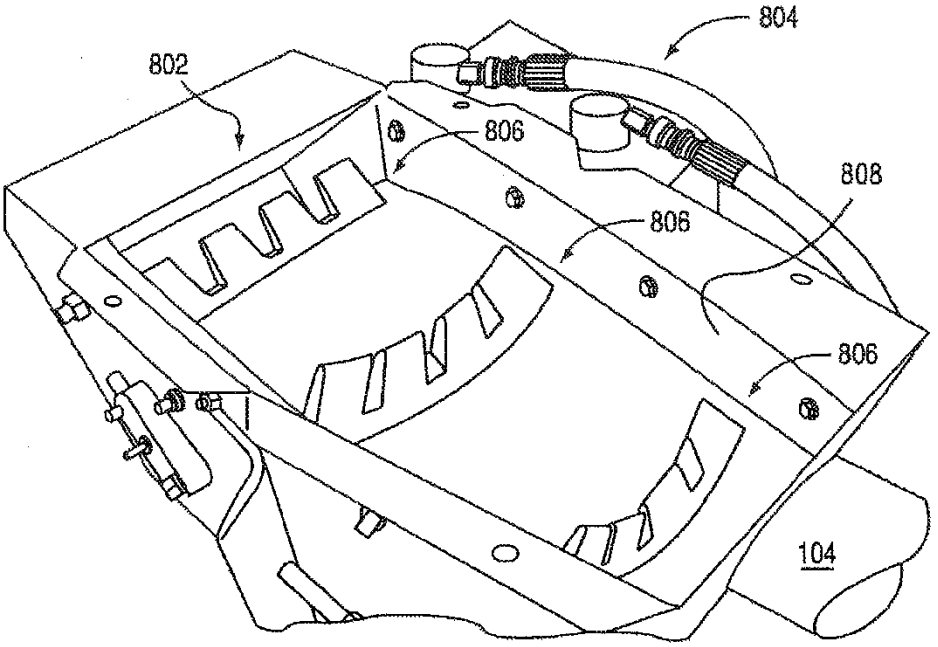

FIG.8

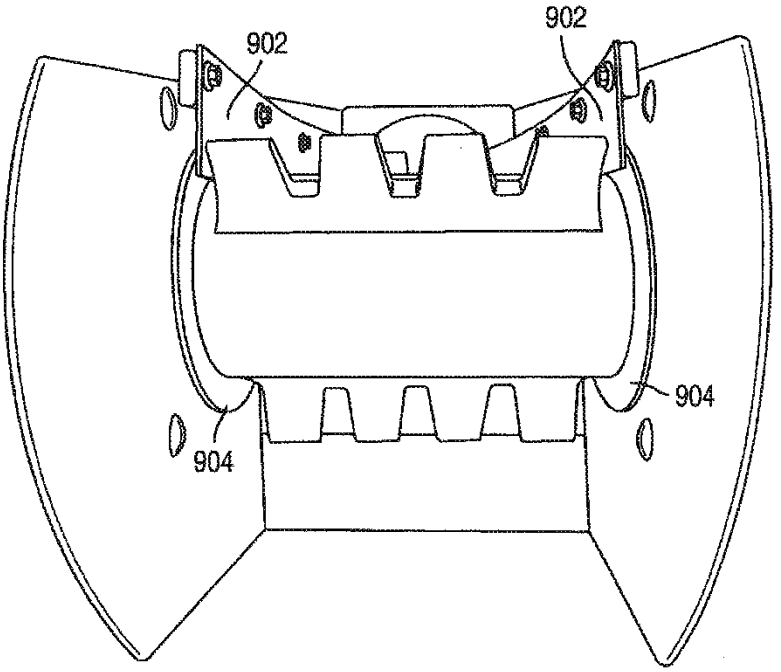

FIG.9

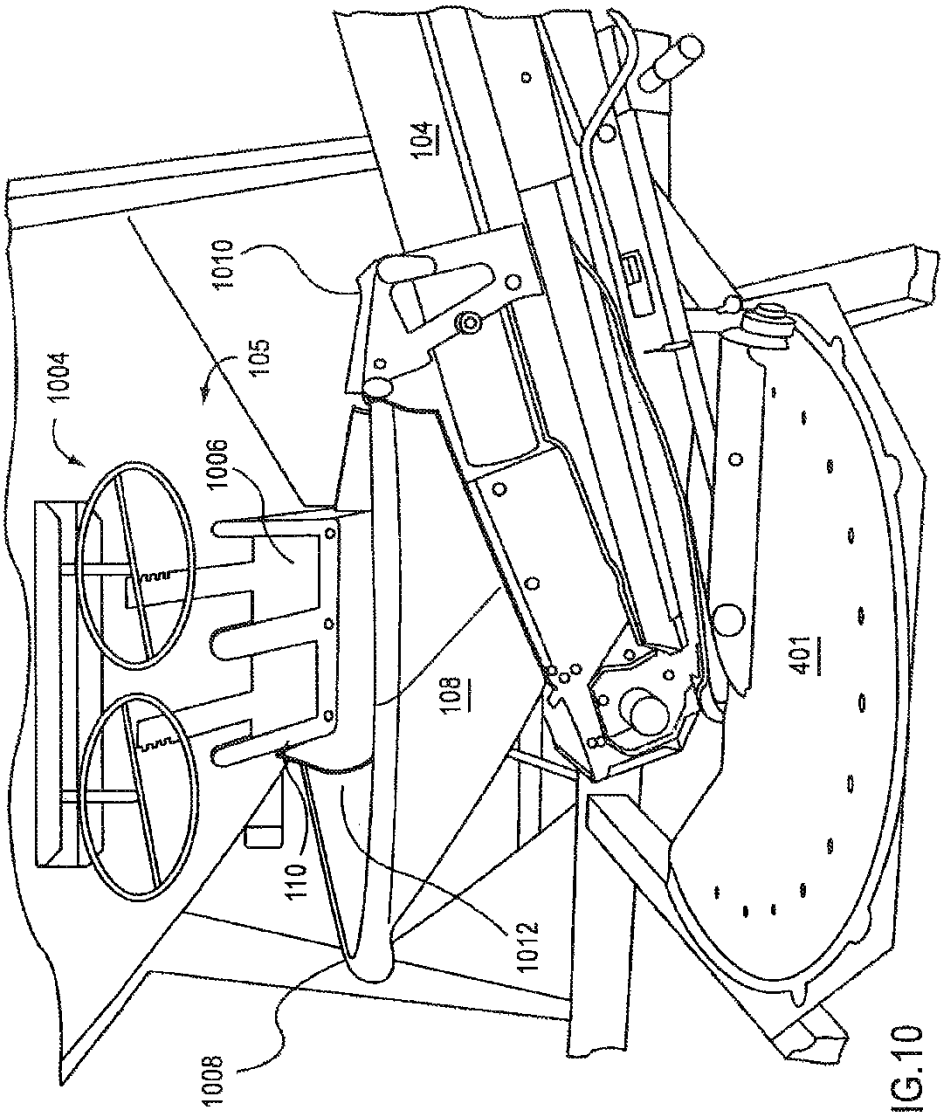

FIG.10

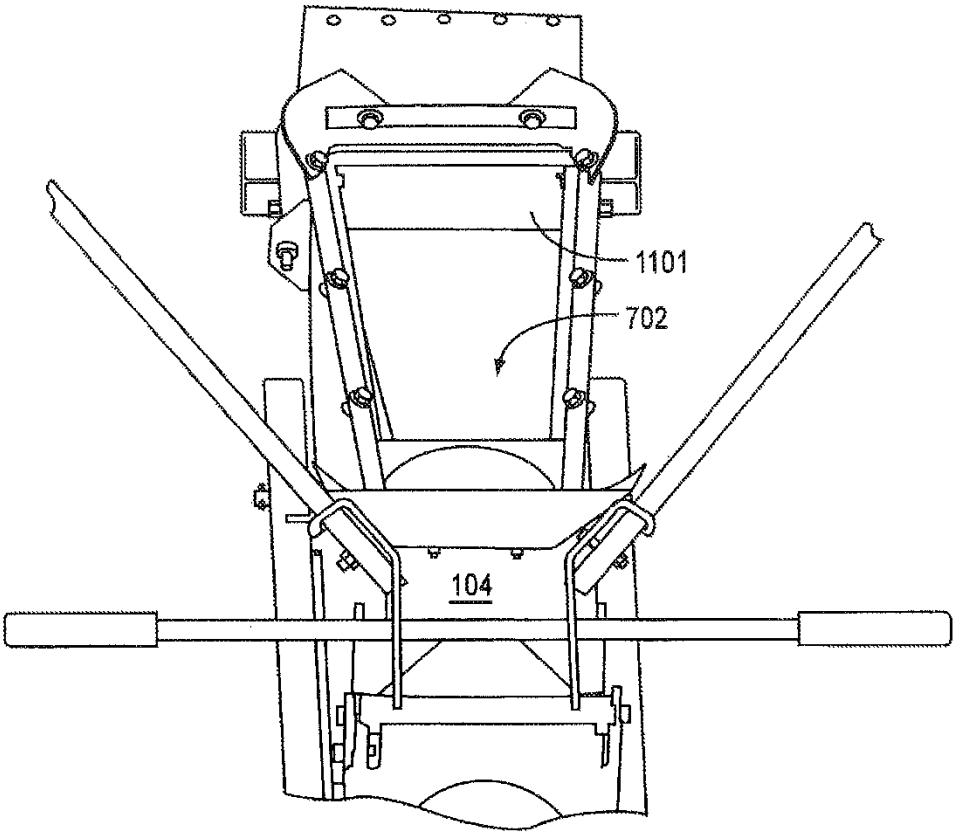

FIG.11

SEED CARRIER WITH PIVOTING CONVEYOR

CROSS-REFERENCE TO RELATED APPLICATION

The present application claims priority to U.S. Ser. No. 12/031,867, filed Feb. 15, 2008, now patented, and claims priority to Provisional Patent Application Ser. No. 60/901,321 filed on Feb. 15, 2007, the entire disclosure of which is incorporated herein by reference.

BACKGROUND OF THE INVENTION

1. Field of the Invention

The present invention relates generally to a conveyor system for a grain or seed carrier. The conveyor system includes a novel pivot system that allows it to either load or unload a container by pivoting it into a loading or unloading position.

2. Description of the Related Art

Conveyor systems for moving grain, seed, etc. are well known. Auger systems are used to rapidly move grain such as feed or the like, while belt driven conveyors are often used for moving more expensive payload, such as seed.

One belt driven conveyor system includes a generally flat belt constructed from a flexible, sturdy material such as rubber or nylon. The conveyor is housed in a tube with rollers on both ends so that the belt may rotate in order to transmit material from one end to the other. Such conveyors are used for unloading seed carriers or the like. However, current conveyors have several problems.

First, current conveyors have the problem that the material being moved can be damaged by the rollers. Second, current conveyors do not have a full range of motion as implemented in seed carries. Third, current conveyors are only implemented for unloading,

There is a need for new and improved conveyor systems that allow a wagon to be unloaded and loaded using a single mechanism.

SUMMARY OF THE INVENTION

According to an embodiment of the present invention, a seed tender or carrier is provided that includes a main hopper for holding seed and a conveyor for transferring seed to and from the main hopper.

According to an embodiment of the present invention, in an unloading position, one end of the conveyor may be positioned under the discharge of the main hopper and coupled with a pivoting support arm. In the unload position, the conveyor can be used to transfer seed from the main hopper to another location, such as to a planter, seeding unit, or the like. A pivot mechanism allows the conveyor to be rotated from under the box into a loading position in which the conveyor intake can rest on the ground or on a stand while the conveyor discharge is positioned to allow conveyed material to be discharged into the main hopper. In this loading position, the conveyor can be used to fill the main hopper.

According to an embodiment of the present invention, a conveyor hopper is provided on the intake side of the conveyor.

According to an embodiment of the present invention, the pivot mechanism allows the conveyor to swing from side to side to simplify unloading of the main hopper and the filling of planters, etc. The pivot mechanism can include a hydraulic cylinder that adjusts the vertical height of the conveyor discharge relative for different filling applications.

According to an embodiment of the present invention, a pivot single pivot point can be provided at one end of the support arm to allow the conveyor to be rotated between the loading and unloading position. The conveyor may be balanced on the pivot point at a location near or at the center of gravity, thereby permitting the conveyor to be rotated with minimal effort on the part of the operator.

According to an embodiment of the present invention, the conveyor can be rotated through at least 180 degrees about a vertical axis and so that it may be positioned in either a forward or rearward transport position. This feature enables the tender to be pulled by different vehicles such as by a pick-up truck with the conveyor forward or by a grain truck with the conveyor rearward.

Further applications and advantages of various aspects and embodiments of the present invention are discussed below with reference to the drawing figures.

BRIEF DESCRIPTION OF THE DRAWINGS

FIG. **1** illustrates a seed carrier according to an embodiment of the present invention.

FIG. **2** is a view of a seed carrier in an unloading position according to an embodiment of the present invention.

FIG. **3** is a view of a seed carrier in a loading position according to an embodiment of the present invention.

FIG. **4** is a view of a base system for the seed carrier according to an embodiment of the present invention.

FIG. **5** is a view of a lever mechanism for the base system according to an embodiment of the present invention.

FIG. **6** is a view of a seed carrier in a transport position according to an embodiment of the present invention.

FIG. **7** is a view of a belt conveyor for the seed carrier according to an embodiment of the present invention.

FIG. **8** is a view of the discharge end of a conveyor according to an embodiment of the present invention.

FIG. **9** is a forward view of a conveyor belt wrapping around a roller according to an embodiment of the present invention.

FIG. **10** is a view of the conveyor hopper in an unloading position according to an embodiment of the present invention.

FIG. **11** illustrates the receiving end of the conveyor according to one embodiment of the present invention.

DETAILED DESCRIPTION OF THE PREFERRED EMBODIMENTS

While the present invention may be embodied in many different forms, a number of illustrative embodiments are described herein with the understanding that the present disclosure is to be considered as providing examples of the principles of the invention and such examples are not intended to limit the invention to preferred embodiments described herein and/or illustrated herein.

In embodiments of the present invention, the novel conveyor pivot system can be implemented with seed carrier or seeding machines. The following section describes non-limiting examples of illustrative seeding equipment according to embodiments of the present invention. It should be appreciated that the following examples are provided for illustration and the present invention is not intended to be limited to the embodiments described herein.

FIG. **1** is a diagram depicting a seed carrier having a tube conveyor according to an embodiment of the present invention. The seed carrier **100** includes a main hopper **105** coupled to a frame **107** by legs **106**. A conveyor **104** is supported by a support arm **102** coupled with a pivoting mechanism **101**

fixed to the frame **107**. The conveyor **104** is pivotably coupled with the support arm by a coupling **103** at a point that is preferably near or at the center of gravity of the conveyor **104**. The conveyor **104** is also coupled to the support arm **102** by a latch (not shown) at the bottom of the conveyor. The latch allows the conveyor **104** to be uncoupled from the support arm **102** at the bottom so that the conveyor is free to rotate about the coupling **103**. By positioning the coupling **103** at or near the center of gravity of the conveyor **104**, the conveyor **104** balances on the pivoting coupling **103** such that little effort is required to rotate the conveyor **104**.

The conveyor **104** includes a conveyor hopper **108** at its base, which is shown in the unloading position below the gravity discharge **110** of the main hopper **105**. At the other end of the conveyor **104** is the discharge **112**. Seed can be gravity feed from the main hopper **105** into the conveyor hopper **108**, which can then be moved to the discharge **112** of the conveyor **104** by an internal elevator (not shown). In one embodiment, the elevator is a motor-driven belt type elevator coupled onto rollers at both ends of the conveyor.

The seed carrier **100** may be transported by conventional means such as on a trailer. FIG. **2** illustrates the seed carrier **100** on a three axle trailer **200** according to an embodiment of the present invention. As shown, the conveyor **104** is in the unloading position.

FIG. **3** illustrates the seed carrier **100** in the loading position. As shown, the conveyor **104** is uncoupled from the support arm **102** at its base and rotated **180** degrees about pivot coupling **103** so that the conveyor hopper **108** is positioned at a convenient location away from the carrier while the discharge **112** of the conveyor **104** is located over the main hopper **105**. A stand **307** is provided for holding the conveyor hopper **108** in place. The stand **307** may be integrated with the conveyor **104**.

Accordingly, in the loading position, grain, seed or like can be feed into the conveyor hopper **108** to be moved to the discharge **112** for filling the main hopper **105**.

FIG. **4** is a view of the pivoting base of the support arm **102**. As shown, the support arm **102** can be pivotably coupled to a base **401** at a center point so that the support arm **102** is rotatable about a vertical axis. Wheels **403** provide support and can run along a track **402** to facilitate the support arm's **102** motion about the perimeter of the base **401**. The support arm **102** can be locked into a selected position of the base **401** by engaging a pin (not shown) with one of a plurality of the holes **407** distributed around the base **401**. The pin is disengaged with a hole by actuating a lever mechanism **404**, which lifts the pin out of a hole. The lever mechanism **404** may be spring actuated to bias the pin toward the holes, so that simply releasing the lever will allow the pin to engage with one of the holes **407**. Also shown, a hydraulic piston **405** is coupled with the support arm **102** for adjusting the height of the support arm **102**.

FIG. **5** is an alternative view of the support arm base. As shown, lever mechanism **404** includes a handle **504** coupled with a cross-bars **505** and **506**. Cross-bar **506** is coupled to cross-bar **505** on one end and to a plate **508** having a pin **509** on the other end, and with a pivoting coupling **502** at a point near the plate. Rotating the handle **504** applies a downward force to crossbar **506** causing it to rotate about the coupling **502** to raise the plate **508** to disengage the pin **509**. While disengaged, the base **401** is free to rotate about its vertical axis. Springs may be provided for biasing the pin **509** toward the holes **407** for engaging therewith, or the pin **509** can be engaged by gravity.

FIG. **6** is a side view of a seed carrier **100** according to an embodiment of the present invention. As shown in FIG. **6**, the conveyor **104** includes an elongated discharge spout **602** and is positioned in a transport position. Support members **604** may be mounted on or integral with the legs **106** for holding the conveyor **104** in a forward transport position as shown, or a rearward transport position. As shown, the carrier **100** is fixed to a dual axle trailer **606**.

FIG. **7** illustrates a basic belt driven conveyor according to an embodiment of the present invention. The conveyor **104** comprises a belt **702** that winds about a pair of rollers **704**. The rollers are positioned outside a tube section **706**, a first roller being positioned in the discharge **112** and a second roller being positioned below the conveyor hopper **108**. A motor (not shown) or other means for turning the rollers may be provided at either end of the conveyor. A void **707** exists below the rollers **704** to allow the belt **702** to travel on its return path.

FIG. **8** is a view of a conveyor belt according to an embodiment of the present invention. The discharge end of a conveyor is shown where a conveyor belt wraps around a motor driven roller **802**. The motor may be a hydraulic motor and therefore, hydraulic hoses **804** provide hydraulic fluid flow to and from the motor. Teeth **806** are provided to push grain or seed up the conveyor. As shown, the conveyor belt is cupped in the tube section but flattens out as it reaches the roller **802**. Channeling members (seals) **808** are provided on each side of the belt to form a seal and prevent grain or seed from falling off the edges of the belt as the belt begins to conform to the tubular portion of the conveyor **104**.

FIG. **9** is a front view of the belt as it travels over the roller **802**. Channeling members (seals) **902** are provided on each side of the belt to form a seal and prevent grain or seed from falling off the edges of the belt as the belt flattens at the roller. As shown, the channeling members **902** are fixed to the conveyor discharge **112** with bolts, but can be fixed by other means or can be integral with the discharge.

Discs **904** are provided at the rollers at the edge of the belt to provide additional channeling/sealing means. The discs **904** are preferably integral with the rollers or coupled therewith so that they may rotate.

FIG. **10** is a side view of the hopper end of the conveyor **104**. As shown, conveyor hopper **108** sits above in ingress to the conveyor **104**. When coupled to the support arm **102**, as shown, the conveyor hopper **108** is positioned below a discharge of the main hopper **106**. The discharge **110** may be opened by conventional means. As showed, a wheel handle mechanism **1004** is provided for opening the discharge doors **1006**.

The conveyor hopper **108** is preferably manufactured from light weight materials such as plastic, canvas, rubber or vinyl. As shown, the hopper **108** may include a mechanism for opening and closing the hopper. In this embodiment, flexible coupling or hinge is provided at one end **1008** of the hopper **108** and a mechanism **1010** is provided at the end of the hopper **108** and is coupled with the conveyor **104**, such that the hopper **108** may be made to have an appropriate fit with the discharge **110** of the main hopper **105**. A flap **1012** can be provided at the bottom of the discharge **110**.

FIG. **11** is a schematic view of the hopper end of the conveyor. As is shown, a brush seal **1101** can be located across the belt **702**. The brush seal **1101** retains the conveyed material within the hopper and does not allow the material to enter the void **707** (shown in FIG. **7**) under the roller. Such an arrangement is desirable because it prevents the conveyed material from being subjected to mechanical agitation, which would result in damage to the conveyed material. The brush seal **1101** allows the conveyor teeth **806** to pass, but not the conveyed material.

One will understand that hydraulic power can be provided by a towing vehicle, such as a tractor or the like or alternatively, hydraulic power can be provided on the tender and driving electrically from the towing vehicle, such as a truck.

Thus, a number of preferred embodiments have been fully described above with reference to the drawing figures. Although the invention has been described based upon these preferred embodiments, it would be apparent to those of skill in the art that certain modifications, variations, and alternative constructions could be made to the described embodiments within the spirit and scope of the invention.

We claim:

1. A seed or grain tender comprising:

a frame;

a main hopper mounted on said frame and having a main hopper discharge;

a base mounted below said main hopper discharge;

a support arm having first and second ends;

a first coupling connecting said first end of said support arm with said base, said first coupling being rotatable in relation to said base about a first vertical axis of rotation, and said first end of said support arm being rotatable in relation to said first coupling about a first horizontal axis of rotation;

a conveyor having a longitudinal axis and first and second ends, a conveyor hopper at said first end, a conveyor discharge at said second end, and an internal elevator for moving seed or grain from said conveyor hopper to said conveyor discharge; and

a second coupling connecting said second end of said support arm with said conveyor at an approximate center of gravity of said conveyor, said second coupling defining a second vertical axis of rotation that is not parallel to said conveyor longitudinal axis, and said conveyor being rotatable in relation to said second end of said support arm about said second vertical axis of rotation between an unloading position wherein said conveyor hopper is disposed below said main hopper discharge to receive agricultural product from said main hopper and a loading position wherein said conveyor discharge is disposed above said main hopper to dispense agricultural product into said main hopper.

2. The seed or grain tender of claim **1**, wherein said first vertical axis of rotation extends through said main hopper discharge.

3. The seed or grain tender of claim **1**, wherein said second vertical axis of rotation extends through said approximate center of gravity of said conveyor.

4. The seed or grain tender of claim **1**, wherein said first horizontal axis extends through said first end of said support arm.

5. The seed or grain tender of claim **1**, wherein said second end of said support arm terminates at or near said second coupling.

6. The seed or grain tender of claim **1**, further comprising a hydraulic piston extending at an acute angle relative to a horizontal plane to connect with a portion of said support arm spaced from said first horizontal axis of rotation.

7. The seed or grain tender of claim **1**, further comprising a stand coupled with said first end of said conveyor and movable between a stowed position allowing said conveyor hopper to be positioned below said main hopper discharge when said conveyor is in said unloading position and an extended position supporting said conveyor hopper above the ground when said conveyor is in said loading position.

8. A seed or grain tender comprising:

a frame;

a main hopper mounted on said frame and having a main hopper discharge;

a base positioned below said main hopper;

a support arm having first and second ends;

a first coupling connecting said first end of said support arm with said base, said first coupling being rotatable about a first vertical axis of rotation, and said first end of said support arm being rotatable about a first horizontal axis of rotation;

a conveyor having a longitudinal axis and first and second ends, a conveyor hopper at said first end, and a conveyor discharge at said second end; and

a second coupling connecting said second end of said support arm with said conveyor at an approximate center of gravity of said conveyor, said second coupling defining a second vertical axis of rotation that is not parallel to said conveyor longitudinal axis, and said conveyor being rotatable about said second vertical axis of rotation between an unloading position wherein said conveyor hopper is disposed below said main hopper discharge to receive agricultural product from said main hopper and a loading position wherein said conveyor discharge is disposed above said main hopper to dispense agricultural product into said main hopper.

9. The seed or grain tender of claim **8**, wherein said first vertical axis of rotation extends through said main hopper discharge.

10. The seed or grain tender of claim **8**, wherein said second vertical axis of rotation extends through said approximate center of gravity of said conveyor.

11. The seed or grain tender of claim **8**, wherein said first horizontal axis extends through said first end of said support arm.

12. The seed or grain tender of claim **8**, wherein said second end of said support arm terminates at or near said second coupling.

13. The seed or grain tender of claim **8**, wherein said conveyor includes an internal elevator for moving seed or grain from said conveyor hopper to said conveyor discharge.

14. The seed or grain tender of claim **8**, further comprising a hydraulic piston extending at an acute angle relative to a horizontal plane to connect with a portion of said support arm spaced from said first horizontal axis of rotation.

15. The seed or grain tender of claim **8**, further comprising a stand coupled with said first end of said conveyor and movable between a stowed position allowing said conveyor hopper to be positioned below said main hopper discharge when said conveyor is in said unloading position and an extended position supporting said conveyor hopper above the ground when said conveyor is in said loading position.

16. A seed or grain tender comprising:

a main hopper having a main hopper discharge;

a base positioned below said main hopper;

a support arm having first and second ends;

a first coupling connecting said first end of said support arm with said base, said first coupling being rotatable about a first vertical axis of rotation, and said first end of said support arm being rotatable about a first horizontal axis of rotation;

a conveyor having a longitudinal axis and first and second ends, a conveyor hopper at said first end, and a conveyor discharge at said second end; and

a second coupling connecting said second end of said support arm with said conveyor at an approximate center of gravity of said conveyor, said second coupling defining a first conveyor axis of rotation that is not parallel to said conveyor longitudinal axis, and said conveyor being

rotatable about said first conveyor axis of rotation between an unloading position wherein said conveyor hopper is disposed below said main hopper discharge to receive agricultural product from said main hopper and a loading position wherein said conveyor discharge is disposed above said main hopper to dispense agricultural product into said main hopper.

17. The seed or grain tender of claim **16**, wherein said first vertical axis of rotation extends through said main hopper discharge.

18. The seed or grain tender of claim **16**, wherein said first conveyor axis of rotation extends through said approximate center of gravity of said conveyor.

19. The seed or grain tender of claim **16**, wherein said first horizontal axis extends through said first end of said support arm.

20. The seed or grain tender of claim **16**, wherein said second end of said support arm terminates at or near said second coupling.

21. The seed or grain tender of claim **16**, wherein said conveyor includes an internal elevator for moving seed or grain from said conveyor hopper to said conveyor discharge.

22. The seed or grain tender of claim **16**, further comprising a hydraulic piston extending at an acute angle relative to a horizontal plane to connect with a portion of said support arm spaced from said first horizontal axis of rotation.

23. The seed or grain tender of claim **16**, further comprising a stand coupled with said first end of said conveyor and movable between a stowed position allowing said conveyor hopper to be positioned below said main hopper discharge when said conveyor is in said unloading position and an extended position supporting said conveyor hopper above the ground when said conveyor is in said loading position.

* * * * *

JS 44 (Rev. 07/16)

CIVIL COVER SHEET

The JS 44 civil cover sheet and the information contained herein neither replace nor supplement the filing and service of pleadings or other papers as required by law, except as provided by local rules of court. This form, approved by the Judicial Conference of the United States in September 1974, is required for the use of the Clerk of Court for the purpose of initiating the civil docket sheet. *(SEE INSTRUCTIONS ON NEXT PAGE OF THIS FORM.)*

I. (a) PLAINTIFFS

UNVERFERTH MFG. CO., INC.

(b) County of Residence of First Listed Plaintiff Putnam
(EXCEPT IN U.S. PLAINTIFF CASES)

(c) Attorneys *(Firm Name, Address, and Telephone Number)*
James P. Silk, Jr., Spengler Nathanson P.L.L., Four SeaGate, Ste. 400, Toledo, OH 43604(419-241-2201); Joseph A. Hynds, Derek F. Dahlgren, Brett A. Postal, Rothwell, Figg, Ernst & Manbeck, P.C.(202-783-6040)

DEFENDANTS

J&M MFG. CO., INC.

County of Residence of First Listed Defendant Mercer
(IN U.S. PLAINTIFF CASES ONLY)

NOTE: IN LAND CONDEMNATION CASES, USE THE LOCATION OF THE TRACT OF LAND INVOLVED.

Attorneys *(If Known)*

II. BASIS OF JURISDICTION *(Place an "X" in One Box Only)*

- ☐ 1 U.S. Government Plaintiff
- ☒ 3 Federal Question *(U.S. Government Not a Party)*
- ☐ 2 U.S. Government Defendant
- ☐ 4 Diversity *(Indicate Citizenship of Parties in Item III)*

III. CITIZENSHIP OF PRINCIPAL PARTIES *(Place an "X" in One Box for Plaintiff and One Box for Defendant) (For Diversity Cases Only)*

	PTF	DEF		PTF	DEF
Citizen of This State	☐ 1	☐ 1	Incorporated *or* Principal Place of Business In This State	☐ 4	☐ 4
Citizen of Another State	☐ 2	☐ 2	Incorporated *and* Principal Place of Business In Another State	☐ 5	☐ 5
Citizen or Subject of a Foreign Country	☐ 3	☐ 3	Foreign Nation	☐ 6	☐ 6

IV. NATURE OF SUIT *(Place an "X" in One Box Only)*

CONTRACT
- ☐ 110 Insurance
- ☐ 120 Marine
- ☐ 130 Miller Act
- ☐ 140 Negotiable Instrument
- ☐ 150 Recovery of Overpayment & Enforcement of Judgment
- ☐ 151 Medicare Act
- ☐ 152 Recovery of Defaulted Student Loans (Excludes Veterans)
- ☐ 153 Recovery of Overpayment of Veteran's Benefits
- ☐ 160 Stockholders' Suits
- ☐ 190 Other Contract
- ☐ 195 Contract Product Liability
- ☐ 196 Franchise

REAL PROPERTY
- ☐ 210 Land Condemnation
- ☐ 220 Foreclosure
- ☐ 230 Rent Lease & Ejectment
- ☐ 240 Torts to Land
- ☐ 245 Tort Product Liability
- ☐ 290 All Other Real Property

TORTS

PERSONAL INJURY
- ☐ 310 Airplane
- ☐ 315 Airplane Product Liability
- ☐ 320 Assault, Libel & Slander
- ☐ 330 Federal Employers' Liability
- ☐ 340 Marine
- ☐ 345 Marine Product Liability
- ☐ 350 Motor Vehicle
- ☐ 355 Motor Vehicle Product Liability
- ☐ 360 Other Personal Injury
- ☐ 362 Personal Injury - Medical Malpractice

PERSONAL INJURY
- ☐ 365 Personal Injury - Product Liability
- ☐ 367 Health Care/ Pharmaceutical Personal Injury Product Liability
- ☐ 368 Asbestos Personal Injury Product Liability

PERSONAL PROPERTY
- ☐ 370 Other Fraud
- ☐ 371 Truth in Lending
- ☐ 380 Other Personal Property Damage
- ☐ 385 Property Damage Product Liability

CIVIL RIGHTS
- ☐ 440 Other Civil Rights
- ☐ 441 Voting
- ☐ 442 Employment
- ☐ 443 Housing/ Accommodations
- ☐ 445 Amer. w/Disabilities - Employment
- ☐ 446 Amer. w/Disabilities - Other
- ☐ 448 Education

PRISONER PETITIONS

Habeas Corpus:
- ☐ 463 Alien Detainee
- ☐ 510 Motions to Vacate Sentence
- ☐ 530 General
- ☐ 535 Death Penalty

Other:
- ☐ 540 Mandamus & Other
- ☐ 550 Civil Rights
- ☐ 555 Prison Condition
- ☐ 560 Civil Detainee - Conditions of Confinement

FORFEITURE/PENALTY
- ☐ 625 Drug Related Seizure of Property 21 USC 881
- ☐ 690 Other

LABOR
- ☐ 710 Fair Labor Standards Act
- ☐ 720 Labor/Management Relations
- ☐ 740 Railway Labor Act
- ☐ 751 Family and Medical Leave Act
- ☐ 790 Other Labor Litigation
- ☐ 791 Employee Retirement Income Security Act

IMMIGRATION
- ☐ 462 Naturalization Application
- ☐ 465 Other Immigration Actions

BANKRUPTCY
- ☐ 422 Appeal 28 USC 158
- ☐ 423 Withdrawal 28 USC 157

PROPERTY RIGHTS
- ☐ 820 Copyrights
- ☒ 830 Patent
- ☐ 840 Trademark

SOCIAL SECURITY
- ☐ 861 HIA (1395ff)
- ☐ 862 Black Lung (923)
- ☐ 863 DIWC/DIWW (405(g))
- ☐ 864 SSID Title XVI
- ☐ 865 RSI (405(g))

FEDERAL TAX SUITS
- ☐ 870 Taxes (U.S. Plaintiff or Defendant)
- ☐ 871 IRS—Third Party 26 USC 7609

OTHER STATUTES
- ☐ 375 False Claims Act
- ☐ 376 Qui Tam (31 USC 3729(a))
- ☐ 400 State Reapportionment
- ☐ 410 Antitrust
- ☐ 430 Banks and Banking
- ☐ 450 Commerce
- ☐ 460 Deportation
- ☐ 470 Racketeer Influenced and Corrupt Organizations
- ☐ 480 Consumer Credit
- ☐ 490 Cable/Sat TV
- ☐ 850 Securities/Commodities/ Exchange
- ☐ 890 Other Statutory Actions
- ☐ 891 Agricultural Acts
- ☐ 893 Environmental Matters
- ☐ 895 Freedom of Information Act
- ☐ 896 Arbitration
- ☐ 899 Administrative Procedure Act/Review or Appeal of Agency Decision
- ☐ 950 Constitutionality of State Statutes

V. ORIGIN *(Place an "X" in One Box Only)*

- ☒ 1 Original Proceeding
- ☐ 2 Removed from State Court
- ☐ 3 Remanded from Appellate Court
- ☐ 4 Reinstated or Reopened
- ☐ 5 Transferred from Another District *(specify)*
- ☐ 6 Multidistrict Litigation - Transfer
- ☐ 8 Multidistrict Litigation - Direct File

VI. CAUSE OF ACTION

Cite the U.S. Civil Statute under which you are filing *(Do not cite jurisdictional statutes unless diversity)*:
35 U.S.C. 1, et seq.

Brief description of cause:
Patent Infringement

VII. REQUESTED IN COMPLAINT:

☐ CHECK IF THIS IS A **CLASS ACTION** UNDER RULE 23, F.R.Cv.P.

DEMAND $

CHECK YES only if demanded in complaint:
JURY DEMAND: ☒ Yes ☐ No

VIII. RELATED CASE(S) IF ANY *(See instructions)*:

JUDGE _____ DOCKET NUMBER _____

DATE
09/13/2016

SIGNATURE OF ATTORNEY OF RECORD

FOR OFFICE USE ONLY

RECEIPT # _____ AMOUNT _____ APPLYING IFP _____ JUDGE _____ MAG. JUDGE _____

UNITED STATES DISTRICT COURT
NORTHERN DISTRICT OF OHIO

I. Civil Categories: (Please check one category only).

1. ☑ General Civil
2. ☐ Administrative Review/Social Security
3. ☐ Habeas Corpus Death Penalty

*If under Title 28, §2255, name the SENTENCING JUDGE:

CASE NUMBER:

II. **RELATED OR REFILED CASES**. See LR 3.1 which provides in pertinent part: "If an action is filed or removed to this Court and assigned to a District Judge after which it is discontinued, dismissed or remanded to a State court, and subsequently refiled, it shall be assigned to the same Judge who received the initial case assignment without regardfor the place of holding court in which the case was refiled. Counsel or a party without counsel shall be responsible for bringing such cases to the attention of the Court by responding to the questions included on the Civil Cover Sheet."

This action is ☐ **RELATED** to another **PENDING** civil case. This action is ☐ **REFILED** pursuant to **LR 3.1**.

If applicable, please indicate on page 1 in section VIII, the name of the Judge and case number.

III. In accordance with Local Civil Rule **3.8**, actions involving counties in the Eastern Division shall be filed at any of the divisional offices therein. Actions involving counties in the Western Division shall be filed at the Toledo office. For the purpose of determining the proper division, and for statistical reasons, the following information is requested.

ANSWER ONE PARAGRAPH ONLY. ANSWER PARAGRAPHS 1 THRU 3 IN ORDER. UPON FINDING WHICH PARAGRAPH APPLIES TO YOUR CASE, ANSWER IT AND STOP.

(1) **Resident defendant.** If the defendant resides in a county within this district, please set forth the name of such county

COUNTY:

Corporation **For the purpose of answering the above, a corporation is deemed to be a resident of that county in which it has its principal place of business in that district.**

(2) **Non-Resident defendant.** If no defendant is a resident of a county in this district, please set forth the county wherein the cause of action arose or the event complained of occurred.

COUNTY:

(3) **Other Cases.** If no defendant is a resident of this district, or if the defendant is a corporation not having a principle place of business within the district, and the cause of action arose or the event complained of occurred outside this district, please set forth the county of the plaintiff's residence.

COUNTY:

IV. The Counties in the Northern District of Ohio are divided into divisions as shown below. After the county is determined in Section **III**, please check the appropriate division.

EASTERN DIVISION

☐ **AKRON** **(Counties: Carroll, Holmes, Portage, Stark, Summit, Tuscarawas and Wayne)**

☐ **CLEVELAND** **(Counties: Ashland, Ashtabula, Crawford, Cuyahoga, Geauga, Lake, Lorain, Medina and Richland)**

☐ **YOUNGSTOWN** **(Counties: Columbiana, Mahoning and Trumbull)**

WESTERN DIVISION

☑ **TOLEDO** **(Counties: Allen, Auglaize, Defiance, Erie, Fulton, Hancock, Hardin, Henry, Huron, Lucas, Marion, Mercer, Ottawa, Paulding, Putnam, Sandusky, Seneca VanWert, Williams, Wood and Wyandot)**

INSTRUCTIONS FOR ATTORNEYS COMPLETING CIVIL COVER SHEET FORM JS 44

Authority For Civil Cover Sheet

The JS 44 civil cover sheet and the information contained herein neither replaces nor supplements the filings and service of pleading or other papers as required by law, except as provided by local rules of court. This form, approved by the Judicial Conference of the United States in September 1974, is required for the use of the Clerk of Court for the purpose of initiating the civil docket sheet. Consequently, a civil cover sheet is submitted to the Clerk of Court for each civil complaint filed. The attorney filing a case should complete the form as follows:

I.(a) **Plaintiffs-Defendants.** Enter names (last, first, middle initial) of plaintiff and defendant. If the plaintiff or defendant is a government agency, use only the full name or standard abbreviations. If the plaintiff or defendant is an official within a government agency, identify first the agency and then the official, giving both name and title.

(b) **County of Residence.** For each civil case filed, except U.S. plaintiff cases, enter the name of the county where the first listed plaintiff resides at the time of filing. In U.S. plaintiff cases, enter the name of the county in which the first listed defendant resides at the time of filing. (NOTE: In land condemnation cases, the county of residence of the "defendant" is the location of the tract of land involved.)

(c) **Attorneys.** Enter the firm name, address, telephone number, and attorney of record. If there are several attorneys, list them on an attachment, noting in this section "(see attachment)".

II. **Jurisdiction.** The basis of jurisdiction is set forth under Rule 8(a), F.R.Cv.P., which requires that jurisdictions be shown in pleadings. Place an "X" in one of the boxes. If there is more than one basis of jurisdiction, precedence is given in the order shown below.
United States plaintiff. (1) Jurisdiction based on 28 U.S.C. 1345 and 1348. Suits by agencies and officers of the United States are included here.
United States defendant. (2) When the plaintiff is suing the United States, its officers or agencies, place an "X" in this box.
Federal question. (3) This refers to suits under 28 U.S.C. 1331, where jurisdiction arises under the Constitution of the United States, an amendment to the Constitution, an act of Congress or a treaty of the United States. In cases where the U.S. is a party, the U.S. plaintiff or defendant code takes precedence, and box 1 or 2 should be marked.
Diversity of citizenship. (4) This refers to suits under 28 U.S.C. 1332, where parties are citizens of different states. When Box 4 is checked, the citizenship of the different parties must be checked. (See Section III below; **NOTE: federal question actions take precedence over diversity cases.)**

III. **Residence (citizenship) of Principal Parties.** This section of the JS 44 is to be completed if diversity of citizenship was indicated above. Mark this section for each principal party.

IV. **Nature of Suit.** Place an "X" in the appropriate box. If the nature of suit cannot be determined, be sure the cause of action, in Section VI below, is sufficient to enable the deputy clerk or the statistical clerk(s) in the Administrative Office to determine the nature of suit. If the cause fits more than one nature of suit, select the most definitive.

V. **Origin.** Place an "X" in one of the seven boxes.
Original Proceedings. (1) Cases which originate in the United States district courts.
Removed from State Court. (2) Proceedings initiated in state courts may be removed to the district courts under Title 28 U.S.C., Section 1441. When the petition for removal is granted, check this box.
Remanded from Appellate Court. (3) Check this box for cases remanded to the district court for further action. Use the date of remand as the filing date.
Reinstated or Reopened. (4) Check this box for cases reinstated or reopened in the district court. Use the reopening date as the filing date.
Transferred from Another District. (5) For cases transferred under Title 28 U.S.C. Section 1404(a). Do not use this for within district transfers or multidistrict litigation transfers.
Multidistrict Litigation – Transfer. (6) Check this box when a multidistrict case is transferred into the district under authority of Title 28 U.S.C. Section 1407.
Multidistrict Litigation – Direct File. (8) Check this box when a multidistrict case is filed in the same district as the Master MDL docket.
PLEASE NOTE THAT THERE IS NOT AN ORIGIN CODE 7. Origin Code 7 was used for historical records and is no longer relevant due to changes in statue.

VI. **Cause of Action.** Report the civil statute directly related to the cause of action and give a brief description of the cause. **Do not cite jurisdictional statutes unless diversity.** Example: U.S. Civil Statute: 47 USC 553 Brief Description: Unauthorized reception of cable service

VII. **Requested in Complaint.** Class Action. Place an "X" in this box if you are filing a class action under Rule 23, F.R.Cv.P.
Demand. In this space enter the actual dollar amount being demanded or indicate other demand, such as a preliminary injunction.
Jury Demand. Check the appropriate box to indicate whether or not a jury is being demanded.

VIII. **Related Cases.** This section of the JS 44 is used to reference related pending cases, if any. If there are related pending cases, insert the docket numbers and the corresponding judge names for such cases.

Date and Attorney Signature. Date and sign the civil cover sheet.

AO 440 (Rev. 12/09) Summons in a Civil Action

UNITED STATES DISTRICT COURT

for the

Northern District of Ohio

UNVERFERTH MFG. CO., INC.	)	
Plaintiff	)	
v.	)	Civil Action No.
J&M MFG. CO., INC.	)	
Defendant	)	

SUMMONS IN A CIVIL ACTION

To: *(Defendant's name and address)* J&M Mfg. Co., Inc.
284 Railroad Street
Fort Recovery, OH 45846

A lawsuit has been filed against you.

Within 21 days after service of this summons on you (not counting the day you received it) — or 60 days if you are the United States or a United States agency, or an officer or employee of the United States described in Fed. R. Civ. P. 12 (a)(2) or (3) — you must serve on the plaintiff an answer to the attached complaint or a motion under Rule 12 of the Federal Rules of Civil Procedure. The answer or motion must be served on the plaintiff or plaintiff's attorney, whose name and address are:

James P. Silk, Jr., Esq.
SPENGLER NATHANSON P.L.L.
Four SeaGate, Suite 400
Toledo, OH 43604-2622

If you fail to respond, judgment by default will be entered against you for the relief demanded in the complaint. You also must file your answer or motion with the court.

GERI M. SMITH, CLERK OF COURT

Date: 09/13/2016

Signature of Clerk or Deputy Clerk

Civil Action No.

PROOF OF SERVICE

(This section should not be filed with the court unless required by Fed. R. Civ. P. 4 (l))

This summons for *(name of individual and title, if any)* _____ was received by me on *(date)* _____.

❒ I personally served the summons on the individual at *(place)* _____ on *(date)* _____; or

❒ I left the summons at the individual's residence or usual place of abode with *(name)* _____, a person of suitable age and discretion who resides there, on *(date)* _____, and mailed a copy to the individual's last known address; or

❒ I served the summons on *(name of individual)* _____, who is designated by law to accept service of process on behalf of *(name of organization)* _____ on *(date)* _____; or

❒ I returned the summons unexecuted because _____; or

❒ Other *(specify)*:

My fees are $ _____ for travel and $ _____ for services, for a total of $ 0.00 .

I declare under penalty of perjury that this information is true.

Date: _____

_____
Server's signature

_____
Printed name and title

_____
Server's address

Additional information regarding attempted service, etc: