US005484249A

United States Patent [19]

Klatt

[11] **Patent Number: 5,484,249**

[45] **Date of Patent: Jan. 16, 1996**

[54] **GRAIN SEEDER LOADER**

[76] Inventor: **Dennis Klatt**, 1131 Tenth St., Sheldon, Iowa 51201

[21] Appl. No.: **372,919**

[22] Filed: **Jan. 17, 1995**

[51] **Int. Cl.**[6] **B60P 1/40**

[52] **U.S. Cl.** **414/523**; 414/332; 414/526

[58] **Field of Search** 414/299–300, 414/303, 332, 471, 482, 486–488, 523, 526

[56] **References Cited**

U.S. PATENT DOCUMENTS

3,439,819	4/1969	Quanbeck	414/526
3,493,136	2/1970	Spellman, Jr.	414/488
3,498,483	3/1970	Meharry	414/523
3,586,181	6/1971	Brock	414/332
4,119,223	10/1978	Fiechter	414/523
4,178,123	12/1979	Loeffler	414/523
4,312,621	1/1982	Quanbeck et al.	414/523
4,701,095	10/1987	Berryman et al.	414/332
5,252,020	10/1993	Kinney et al.	414/488 X

FOREIGN PATENT DOCUMENTS

0732608	3/1932	France	414/523
2447292	9/1980	France	414/332
0915027	1/1963	United Kingdom	414/523

Primary Examiner—Michael S. Huppert
Assistant Examiner—James W. Keenan

[57] **ABSTRACT**

An elevator device adapted to fill the seed box or boxes of a grain seeder, grain drill or other distribution device for similar particulate material. The elevator mechanism is pivotally mounted on the main device so that the delivery end can be raised to a use position or lowered to a non-use position for transport either in the field or on the road. Because of a pivotal motion, the hopper end moves in an opposite directions. The mounting is unique in providing a simple power device operating in a single direction for movement of the elevator from a transport position to a use position.

5 Claims, 3 Drawing Sheets

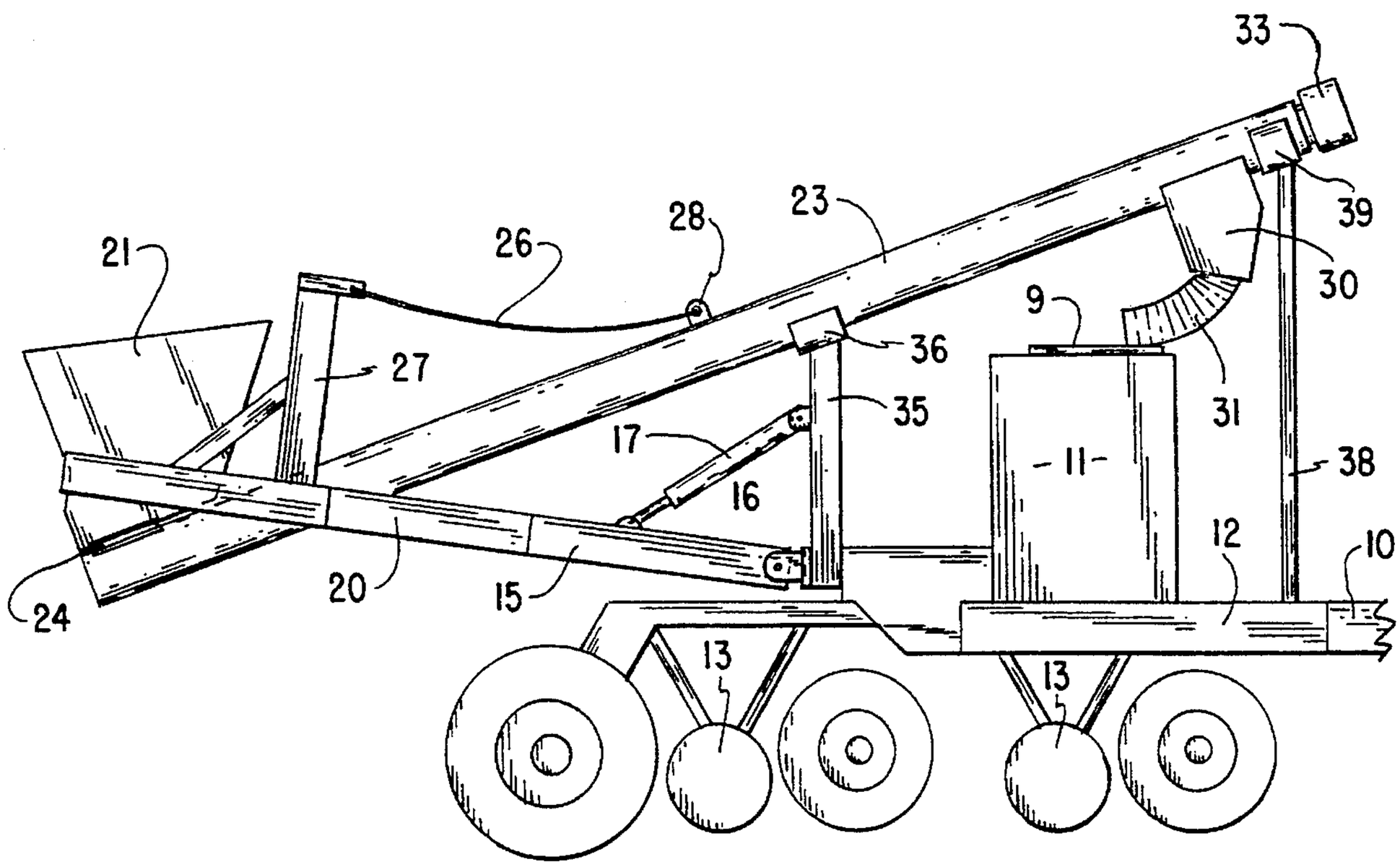

Unverferth Exhibit 2018
Par-Kan v. Unverferth
IPR2024-01426

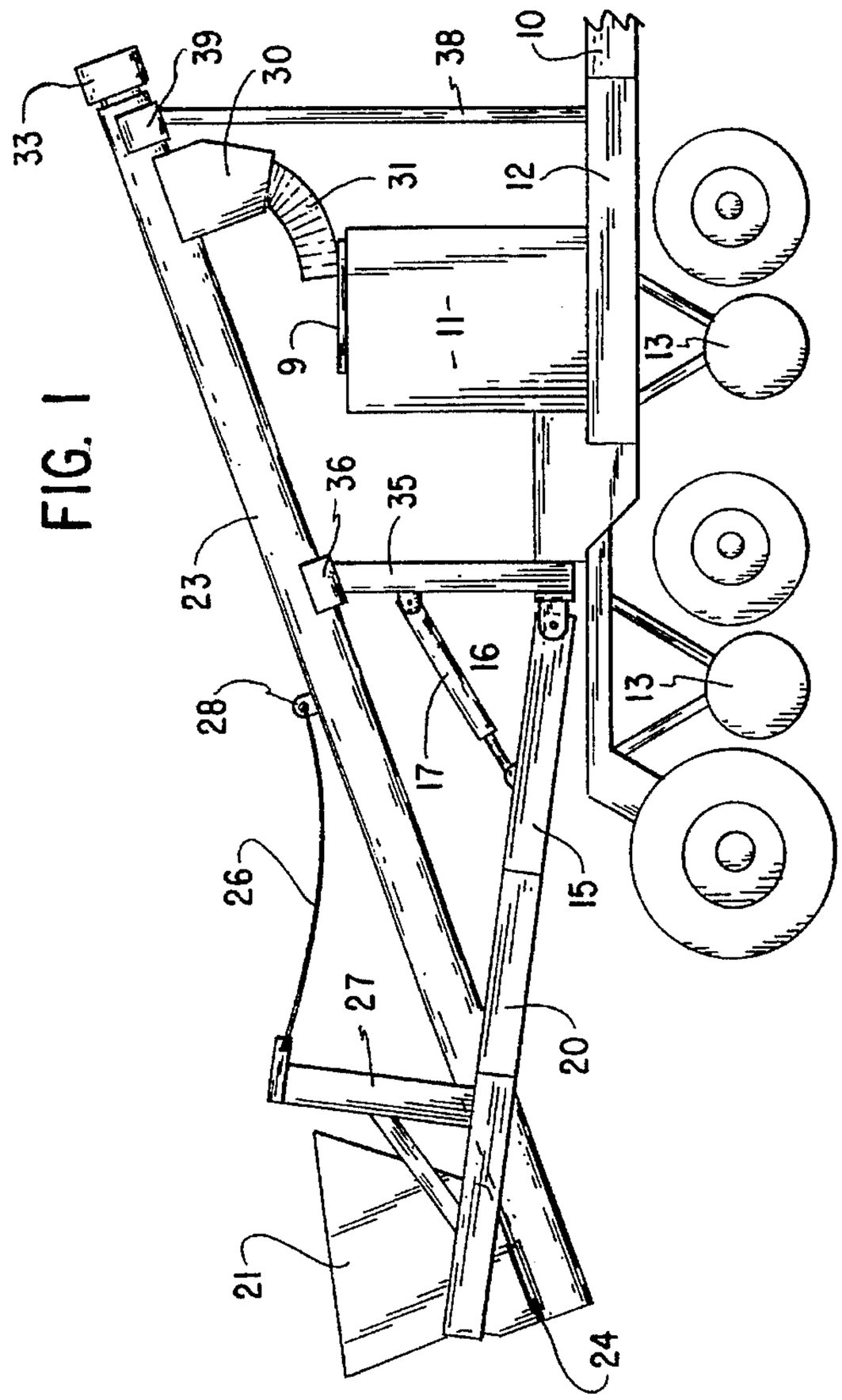
33
39
30
38
10
31
12
9
11
13
36
35
23
16
28
17
26
15
27
20
21
24

FIG. 1

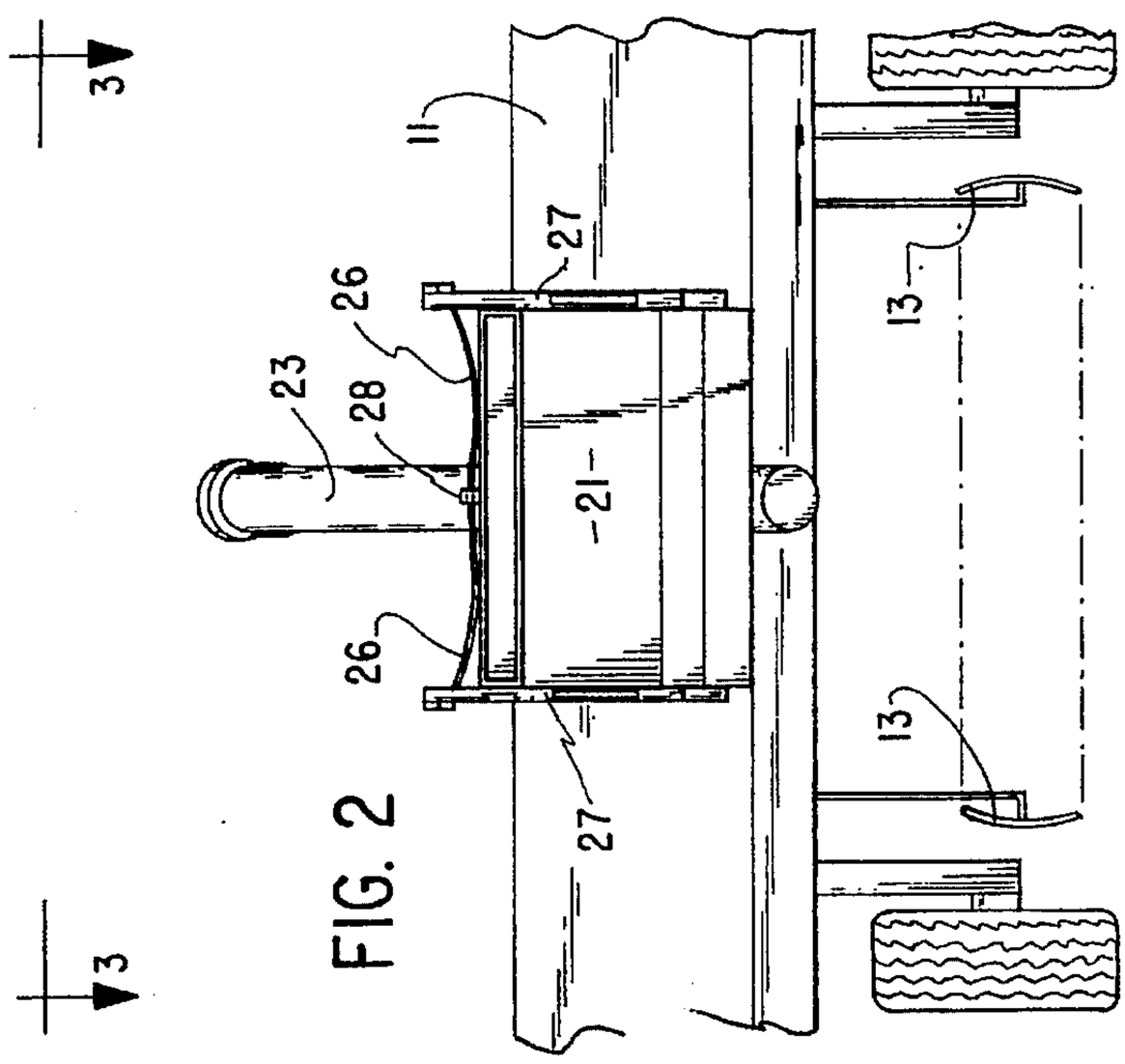
3
11
27
26
23
28
21
13
26
27
13
3

FIG. 2

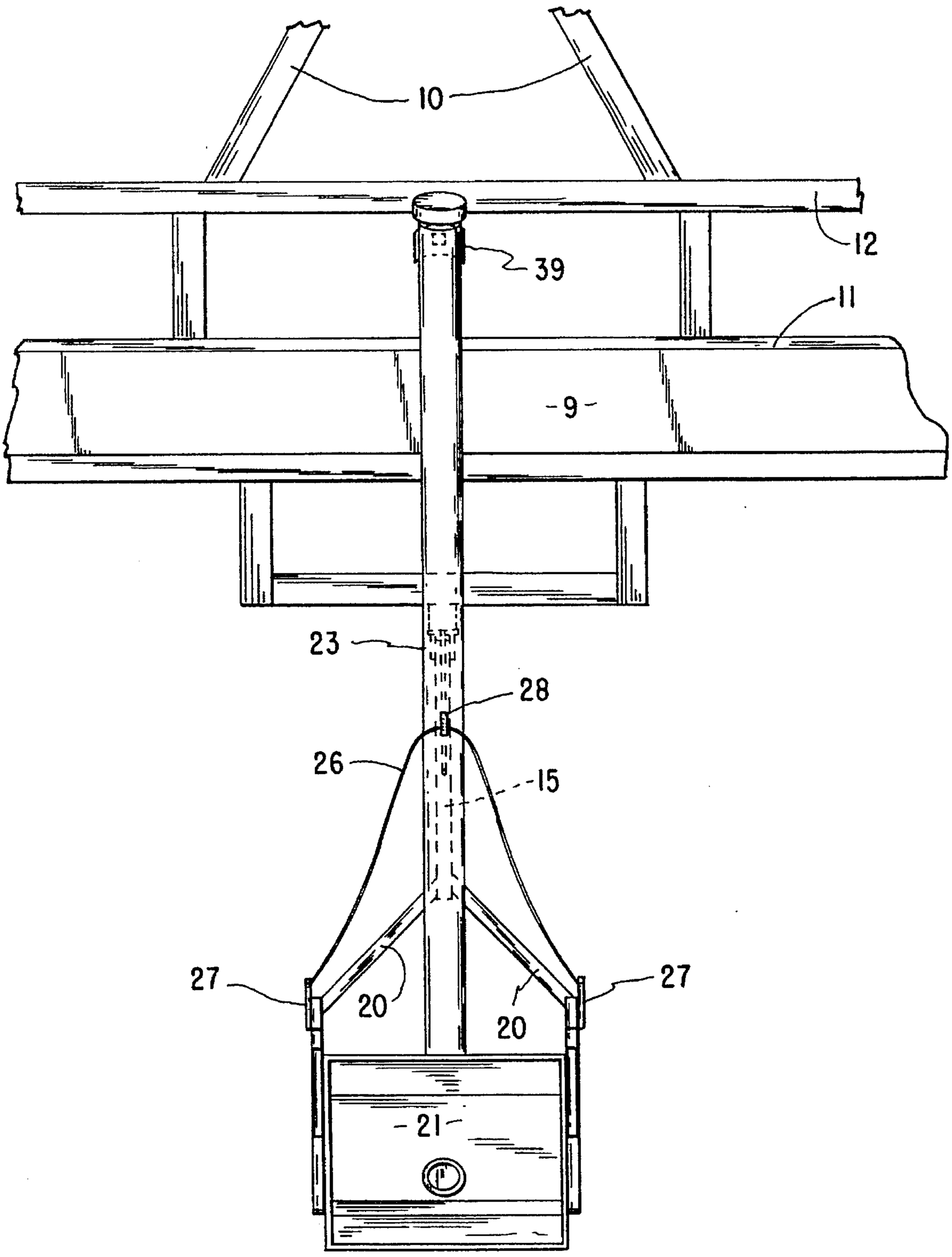

FIG. 3

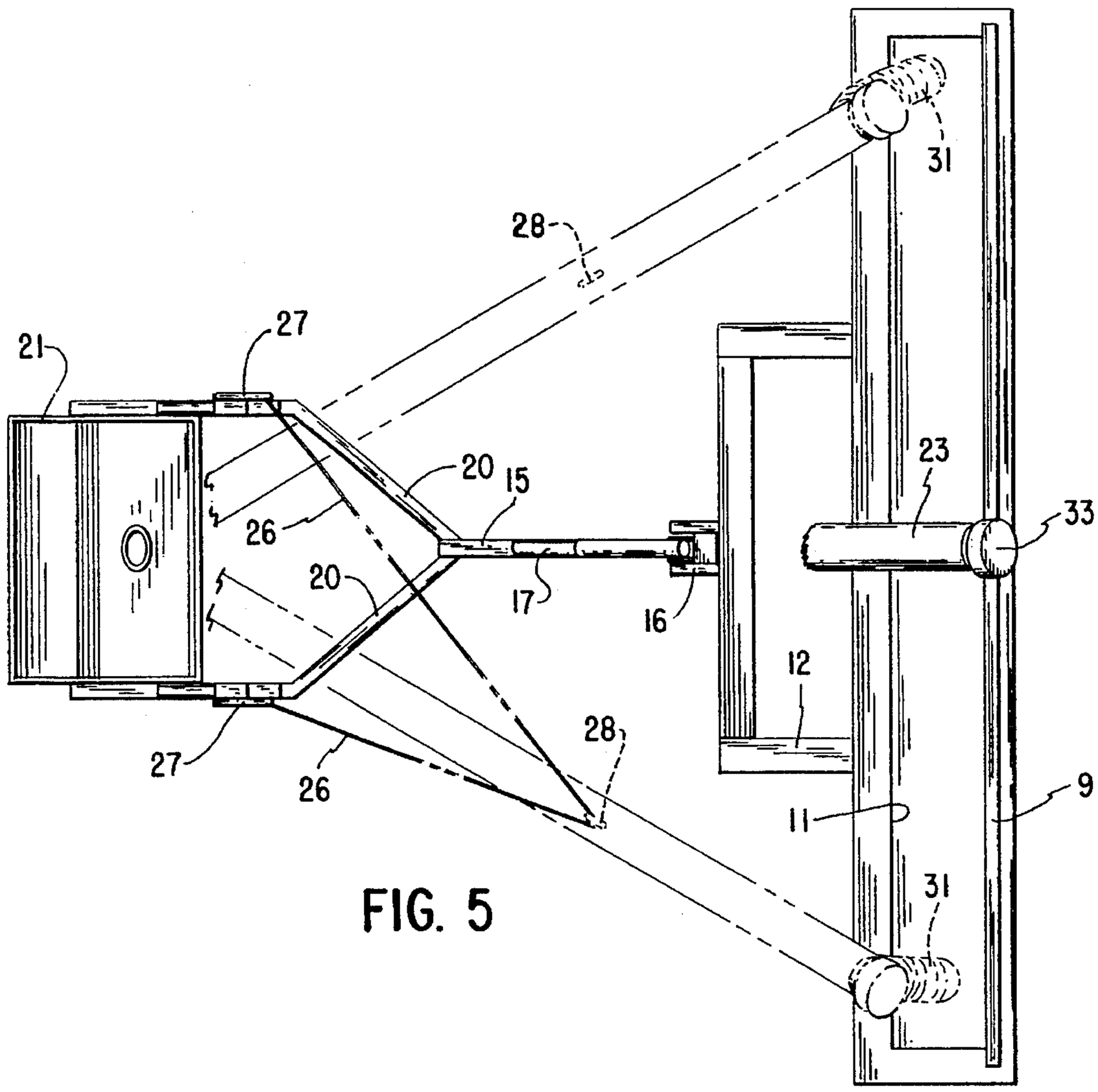
31
28
27
21
20
15
26
23
33
20
17
16
12
28
27
26
9
11
31

FIG. 5

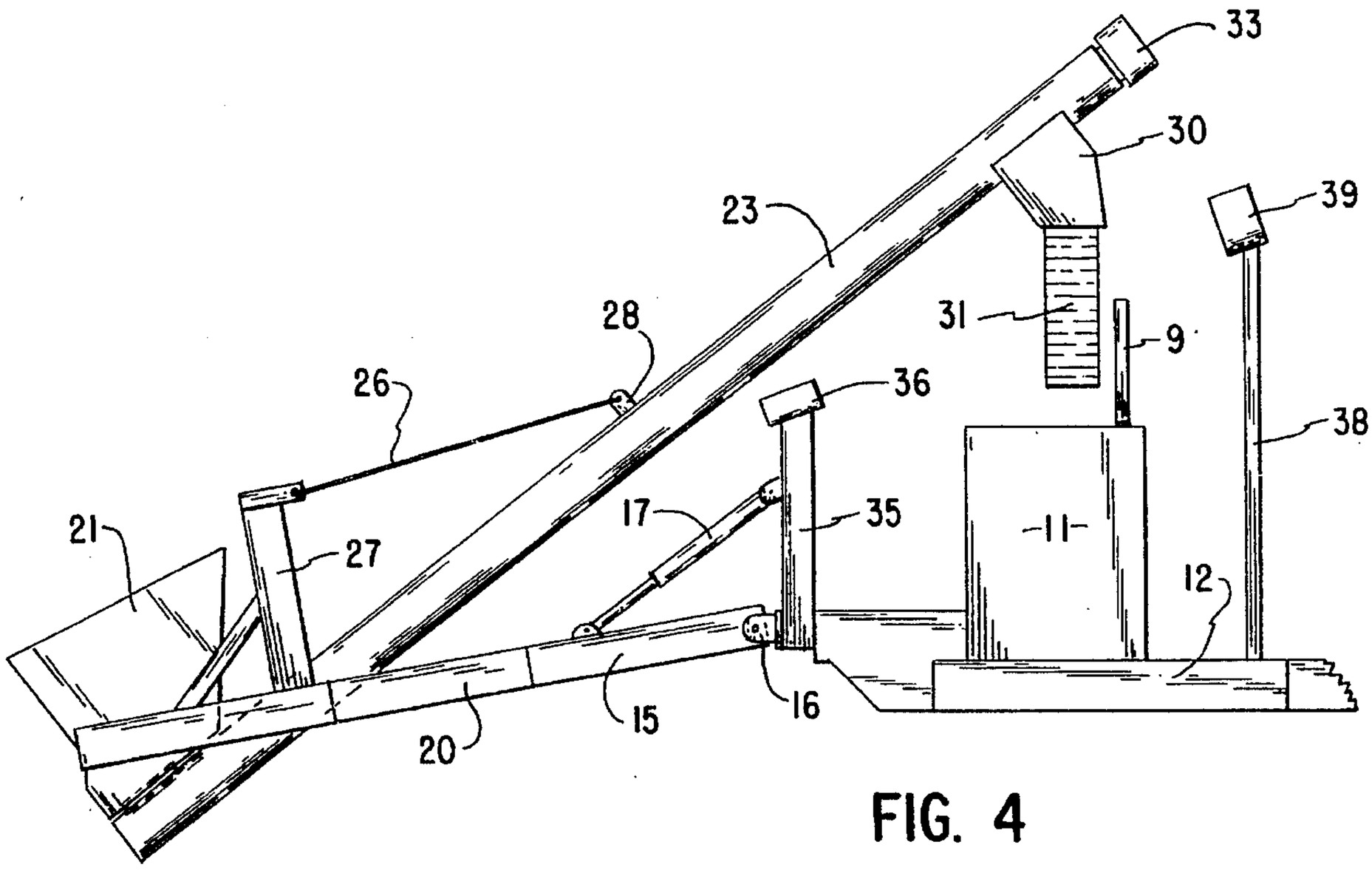
33
30
23
39
31
28
9
26
36
38
17
35
21
27
11
12
16
15
20

FIG. 4

GRAIN SEEDER LOADER

BACKGROUND AND SUMMARY OF THE INVENTION

This invention pertains to an elevator mechanism designed to operate in combination with a distributor for particulate material such as a grain seeder. The elevator is adapted to be carried by the seeder. When it is to be used, the elevator hopper is lowered to a level where it can easily be filled with seed. Lowering the hopper raises the discharge end of the elevator above the seed bin on the seeder so that the seed can be readily moved from the hopper to the seed bin. When the seeder is in use or is being transported, the hopper is raised where it will be out of the way.

Seeders or grain drills have long been used to plant small grain crops such as oats, barley or wheat. The earliest drills were not large and had bins that could readily be loaded by hand. As the size of equipment used in agriculture has increased in size, the size of planting mechanism has also grown with the result that the seed bin has had to be raised to make room for the planting mechanism.

The raising of the bin has created problems in getting the grain conveniently into the seed bin. Shovelling the grain into the bin by hand is not only slow but tiring. Use of a separate piece of equipment such as a portable elevator is also slow requiring placement of the elevator at least once with each filling—and often requiring more locations than that to make reasonably sure of even distribution within the bin.

By the present invention, an elevating device is provided which is permanently placed, can be easily moved to provide even distribution in the seed bin, and can be moved out of the way for easy transport in the field and on the road.

BRIEF DESCRIPTION OF THE DRAWINGS

FIG. **1** is a side elevational view of the elevator device in place on a seeder and in position for transport,

FIG. **2** is a partial rear elevational view of the combination of FIG. **1**,

FIG. **3** is a top view from line **3**—**3** of FIG. **2**,

FIG. **4** is a partial side elevational view showing the elevator in its use position and omitting much of the details of the seeder, and

FIG. **5** is a top plan view of the mechanism shown in FIG. **4**, and showing alternate lateral positions of the discharge end of the elevator.

DESCRIPTION

Briefly this invention consists of a combination of a material distribution device such as a grain seeding machine with an attached specialized loading device adapted to fill the bin of the spreader from a hopper, and to spread the material relatively evenly in the bin.

More specifically, and referring to the figures, this invention is described as being used in connection with an ordinary grain seeding device having a tongue **10** adapted to be pulled by a farm tractor. The seeder includes a bin **11** mounted on a frame **12** above a set of colters **13**. Seed from the bin **11** falls through seed chutes (not shown) into the seed bed as prepared by the colters.

The problem solved by the present invention is the filling of the bin **11**. As machinery on the farm gets larger, work formerly done by hand becomes increasingly difficult. With current large machinery, the opening at the top of the bin has become so high that hand filing of the bin is beyond possibility. Therefore, mechanical means are necessary. A closure cover **9** may be provided to protect the seeds in the bin **11** when it is not being filled.

The present invention provides an efficient and convenient mechanical means for filling the bins. The device is mounted on an arm **15** pivotally attached to the frame **12** at a pivotal axis **16**. The position of this arm **15** relative to the frame **12** is controlled by a hydraulic piston and cylinder assembly **17** operable from the tractor's hydraulic system. The arm **15** is generally "Y"-shaped having two arms **20** spreading apart to carry a hopper **21** into which the seeds can easily be loaded.

An elevator **23**, preferably of the auger type, is mounted on the bottom of the hopper **21** and includes a swivel mounting **24** which allows the tube of the elevator **23** to be swung from side to side in an arc at least wide enough to cover the bin **11**. The angular relation of the tube of the elevator **23** relative to the hopper **21** is controlled somewhat flexibly by a cable **26** or the like. This cable runs between upright posts **27** and a loop **28** on the elevator. Such an arrangement is useful when the elevator is operating so that the discharge spout **30** can be moved across the bin **11** as shown in FIG. **5**. A flexible tube **31** may be used to adjust for the fact that the path of a discharge spout **30** is arcuate in shape and does not strictly follow a straight line over the bin **11**. A motor **33** drives the flighting within the elevator. This motor may be driven by the electric or hydraulic system of the pulling tractor, or by an electric motor driven from external sources since it will be used only where the seed or other material is available. Although the elevator is described as an auger type, and that is certainly a preferred type, it is possible that an open trough type elevator might be adapted to use in this combination. Therefore, the material is carried through a trough whether an open U-shaped trough or a closed tubular trough.

When the elevator **23** is not functioning as, for example, when the seeder is driven over the field, the tube may rest in supports as shown. A middle support is provided by a post **35** mounted on the frame **12** of the seeder. A V-shaped or U-shaped receiving block **36** may be provided atop the post **35** to cradle the elevator **23** near its midsection.

Support for the elevator **23** at its outer end and for the motor **33** may also be provided. As illustrated, this support also includes a vertical post **38** mounted on the frame **12** and carrying a receiving yoke **39** to cradle the outer end of the elevator tube on the motor **33**. Thus, the elevator is completely supported when in its carried position.

In use, when the bin **11** is to be filled, the hydraulic mechanism **17** allows the hopper **21** to drop toward the ground. Because of the location of the pivotal axis **16**, the dropping of the hopper **21** causes the spout **30** to rise off its supports and into position to discharge material from the tubes **31** into the hopper **11**. The door **9** will have to be open, and the tube **31** may need to be inserted into the opening on top of the hopper—although with proper proportions, the tube **31** will simply fall into place. Material placed into the hopper can then be elevated into the bin **11** as the outer end of the elevator is moved laterally to distribute material in the bin.

When the loading of the bin **11** is complete, the hydraulic system **17** can again be actuated to raise the hopper **21**. This movement causes the spout **30** to drop, and the tube of the elevator **23** can then be guided into the yoke **35** and block **36**. Resting there, the elevator can be transported with the

seeder. Normally, this position causes some relaxation of the cable **26** as shown in FIGS. **1** and **3**.

It is now obvious that the invention provides a convenient device for filling the bin of a material spreading machine.

I claim as my invention:

1. In combination with a distribution device for particulate material having a material bin mounted on a frame, elevator means for filling said bin comprising an elevator including a trough for holding particulate material and means in said trough to move said material, mounting means for said elevator attached to said trough and pivotally connected to said frame on a substantially horizontal axis, said elevator having discharge means at the upper end of said elevator adapted to discharge into said bin and a lower end opposite said discharge means, hopper means attached to said mounting means adjacent said lower end of said elevator, means for pivoting said lower end of said elevator pivotally connected on a nearly vertical axis to said hopper means and being open to said hopper means whereby particulate material in said hopper means will drop into said lower end of said elevator, and whereby said upper end pivots about said means for pivoting for lateral movement of said upper end across said bin to provide nearly uniform distribution of material in said bin.

2. The combination of claim **1** in which power means is connected between said mounting means and said frame whereby said elevator can be moved from a lower transport position to a raised use position.

3. The combination of claim **2** in which cable means is connected to said mounting means and is slidably engaged with said trough whereby said cable supports said trough in said use position but also allows movement across the bin.

4. The combination of claim **2** in which rest means are mounted on said frame in position to support said trough in said transport position.

5. The combination of claim **1** in which said bin is an elongated rectangular shape transverse of said frame and said discharge means includes a flexible tube mounted to allow said flexible tube to discharge into said bin despite the displacement caused by the arcuate movement of said discharge means across the elongated rectangle of said bin.

* * * * *