IN THE UNITED STATES DISTRICT COURT
FOR THE NORTHERN DISTRICT OF IOWA
WESTERN DIVISION

UNVERFERTH MFG. CO., INC., Plaintiff, vs. MERIDIAN MFG., INC., Defendant.	No. C19-4005-LTS **MEMORANDUM OPINION AND ORDER REGARDING CONSTRUCTION OF DISPUTED PATENT CLAIM TERMS**

I. INTRODUCTION

This action is before me for submission to the parties of a ruling on patent claims construction after a *Markman* hearing.[1] Plaintiff Unverferth Manufacturing Company, Inc. (Unverferth), holds United States Patent Nos. 8,221,047 ('047 patent), 8,967,940 ('940 patent) and 9,745,123 ('123 patent) which relate to a seed or grain tender with a pivoting conveyor. Defendant Meridian Manufacturing, Inc. (Meridian), holds United States Patent Nos. 6,964,551 ('551 patent), which relates to a trailer for transporting seed boxes and 8,292,065 ('065 patent), which relates to a cross cleated conveyor belt for a tubular conveyor. The parties dispute the construction of 16 claim terms across the five identified patents.

II. BACKGROUND

A. Procedural History

Unverferth filed its complaint (Doc. No. 1) on January 23, 2019. Meridian filed its answer (Doc. No. 12) and counterclaim on February 14, 2019. Unverferth filed its answer (Doc. No. 18) to Meridian's counterclaim and its own counterclaim on March 7,

[1] *See Markman v. Westview Instruments, Inc.*, 52 F.3d 967 (Fed. Cir. 1995) (en banc), *aff'd*, 517 U.S. 370 (1996).

Unverferth Exhibit 2023
Par-Kan v. Unverferth
IPR2024-01426

2019. Meridian filed its answer (Doc. No. 19) to Unverferth's counterclaim on March 28, 2019.

On September 6, 2019, the parties presented a technical tutorial on the background of the technology at issue in the case. *See* Doc. No. 32. They also submitted a joint claim construction statement. *See* Doc. No. 33. The parties then filed their opening claim construction briefs (Doc. Nos. 36, 37) and responsive briefs (Doc. Nos. 39, 40) prior to the *Markman* hearing.

B. The Unverferth Patents

All three Unverferth patents are titled "seed carrier with pivoting conveyor." The '123 patent is a continuation of the '940 patent, which is a continuation of the '047 patent. The specifications in these three patents are substantially identical. The claimed invention is used by farmers to deliver seed or grain from its place of storage to planting machinery in the field. Once the seed is loaded into the main hopper via conveyor (the loading position), the conveyor can be rotated allowing the seed tender to transport seed or grain to the field. In the field, the conveyor can be rotated (the unloading position) so the seed or grain is gravity-fed from the main hopper into the conveyor hopper and then discharged into planting machinery. The two different positions are reflected in the images below with Figure 3 reflecting the loading position and Figure 2 reflecting the unloading position:

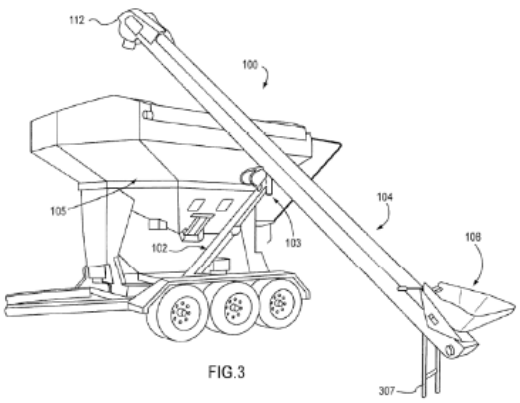

FIG.3

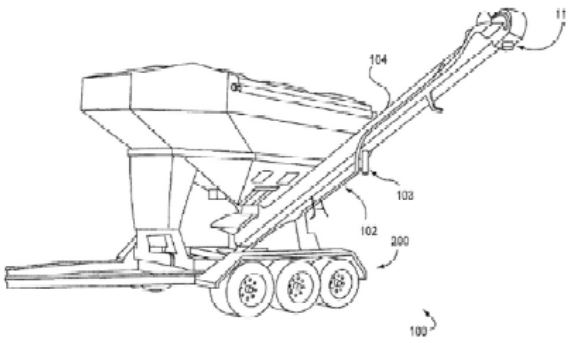

FIG.2

Unverferth alleges infringement of claims 1-7, 9-14, 16, 19-20, 22-24, 26-30 and 34 of the '047 patent, claims 1-8, 10-16 and 18-23 of the '940 patent and claims 1, 3-10 and 12-21 of the '123 patent.

The '047 patent describes the seed carrier in the abstract as follows:

> A seed carrier includes a main hopper coupled with a frame via leg members. The main hopper has a discharge. A base plate is coupled with the frame. A support arm is rotatably coupled with the base plate at a first end. A belt driven conveyor having a conveyor hopper at a first end and a discharge at a second end is rotatably coupled with a second end of said support arm at an approximate center of gravity thereof. A latch mechanism is provided for detachably coupling the first end of the conveyor with the first end of the support arm such that the conveyor hopper is position below the main hopper discharge. When the conveyor is uncoupled from the first end of the support arm, the conveyor can rotate to a loading position wherein the discharge thereof can be positioned over the main hopper.

Doc. No. 36-2 at 2. Generally speaking, Meridian argues that Unverferth's specifications provide notice of only one embodiment in which the base is positioned directly below the main hopper discharge. In light of this notice in the '047 patent and prior litigation between the parties, Meridian states it redesigned a bulk seed tender with components beyond the scope of Unverferth's '047 patent. Meridian contends that Unverferth filed continuation applications to expand the scope of its patent beyond its original disclosure and to encompass Meridian's new design.

Unverferth contends that Meridian seeks to read extraneous limitations into the claims. It notes that another company took a similar approach when sued by Unverferth for infringing two of the three patents asserted here and cites the *Markman* order from that case, in the Northern District of Ohio, in support of many of its proposed constructions. *See* Doc. No. 36-7.

C. The Meridian Patents

The Meridian patents are for a trailer for transporting seed boxes (the '551 patent) and a cleated belt used in a conveyor (the '065 patent). The abstract for the '551 patent provides:

> An improved trailer for transporting bulk seed boxes is provided. The trailer includes a bed, a hopper extending below the bed for receiving seed from the bulk seed box, and an auger for unloading seed from the hopper. The bed includes upwardly and outwardly extending guide plates to provide self-centering of the seed box when the box is loaded onto the bed with a forklift truck. The bed includes lock bars moveable between locked and unlocked positions to secure the seed box to the bed. The hopper includes a slide gate with a control arm connected to the gate and extending to the auger side of the trailer for moving the slide gate between open and closed position. The auger includes a foldable upper section which is pivotal between a folded transport position and an extended raised operative position. The folding of the upper auger section is facilitated by a gas cylinder and a lever arm.

Doc. No. 37-27. The trailer is shown as follows:

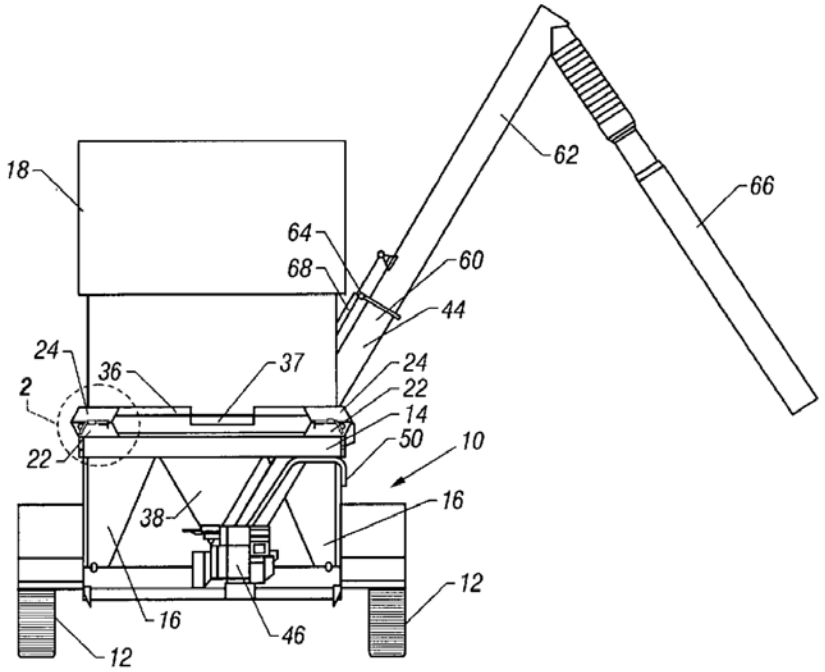

The disputed issue in the '551 patent relates to pivoting lock bars for securing seed containers to a trailer. Meridian asserts infringement of claims 12-14 and 18 of the '551 patent.

The abstract of the '065 patent provides:

> An improved conveyor belt is provided for use in a tubular conveyor. The belt includes a plurality of cleat sets extending at a non-perpendicular angle across the axis of the belt. Adjacent cleat sets are offset with respect to one another, such that the axis of adjacent cleat sets are non-parallel. Each cleat set includes a plurality of spaced apart, upstanding cleat members. The orientation of the cleat sets helps maintain material toward the center of the belt, while the orientation of the cleat members eliminates vacuum behind the cleat members.

Doc. No. 37-28. The belt is shown as follows:

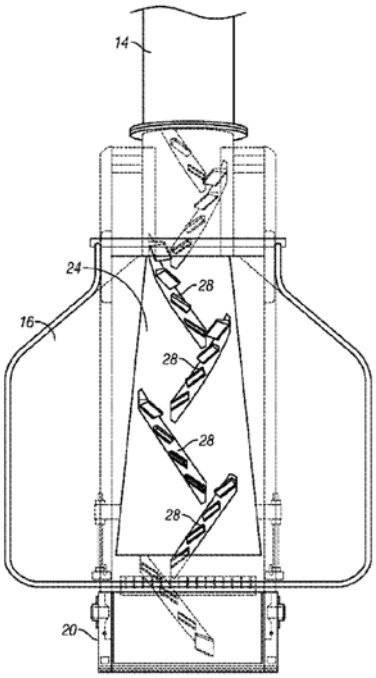

The disputed issue in the '065 patent relates to a specific design of a cleat conveyor belt. Meridian asserts infringement of claim 1 of the '065 patent.

Meridian contends that Unverferth began selling box seed trailers with Meridian's patented lock bars and conveyors having Meridian's patented cleated belt design. Unverferth argues that its (Unverferth's) accused products are outside the scope of the

claims and that Meridian attempts to read out limitations from the claims to allege infringement.

The following 16 terms are disputed across the five patents at issue:

- base
- vertical
- horizontal
- parallel
- below
- locking mechanism
- first conveyor axis of rotation
- first axis of rotation
- second axis of rotation
- third axis of rotation
- lock bars on the bed
- pivotally connected
- pins on the bed
- operatively connected
- extends laterally away from the first sidewall
- "a first set of cleats" and "a second set of cleats"

III. APPLICABLE STANDARDS

Before the fact finder can consider a claim of patent infringement, the court must determine what the claim (the patent) is. Thus, an infringement case has two distinct stages. First, the court finds the proper construction of the patent. Second, the fact finder considers whether the patent was violated. *See Cook Biotech Inc. v. Acell, Inc.*, 460 F.3d 1365, 1372 (Fed. Cir. 2006).

The court interprets the words of the claim to determine their meaning and scope. *See Presidio Components, Inc. v. American Tech. Ceramics Corp.*, 702 F.3d 1351, 1358 (Fed. Cir. 2012) (citing *Cybor Corp. v. FAS Techs., Inc.*, 138 F.3d 1448, 1454 (Fed. Cir. 1998)); *Markman*, 517 U.S. at 391. "When the parties present a fundamental dispute regarding the scope of a claim term, it is the court's duty to resolve it." *O2 Micro Int'l, Ltd. v. Beyond Innovation Tech. Co.*, 521 F.3d 1351, 1362 (Fed. Cir. 2008). "There are limits to the court's duties at the patent claim construction stage. For example, courts should not resolve questions that do not go to claim scope, but instead go to infringement, or improper attorney argument." *Eon Corp. IP Holdings v. Silver Spring Networks*, 815 F.3d 1314, 1319 (Fed. Cir. 2016) (citations omitted). However, claim construction is a quasi-factual question, and the court is allowed to make factual findings and resolve fact-based disputes. *Teva Pharm. USA, Inc. v. Sandoz, Inc.*, 574 U.S. 318, 326 (2015). After the claim is construed, the fact finder then "compares the properly construed claims to the allegedly infringing device." *Presidio Components*, 702 F.3d at 1358. Thus, my task is to "define[] the claim with whatever specificity and precision is warranted by the language of the claim and the evidence bearing on the proper construction," and then, "the task of determining whether the construed claim reads on the accused product is for the finder of fact." *Markman*, 517 U.S. at 370.

The interpretation and construction of patent claims is a matter of law solely for the court. *Id.* at 390. "It is the claims that define the metes and bounds of the patentee's invention." *Thorner v. Sony Computer Entertainment America, L.L.C.*, 669 F.3d 1362, 1367 (Fed. Cir. 2012) (citing *Phillips v. AWH Corp.*, 415 F.3d 1303, 1313 (Fed. Cir. 2005) (en banc)). Claim interpretation proceeds under the guidelines set forth in *Markman*. Accordingly:

> To ascertain the meaning of claims, we consider three sources: the claims, the specification, and the prosecution history. Expert testimony, including evidence of how those skilled in the art would interpret the claims, may also be used. In construing the claims in this case, all these sources, as

> well as extrinsic evidence in the form of [] sales literature, were included in the record of the trial court proceedings.

Markman, 52 F.3d at 979 (citations and internal quotations omitted).

The construction process begins with the language of the claims. *See Renishaw P.L.C. v. Marposs Societá Per Azioni*, 158 F.3d 1243, 1248 (Fed. Cir. 1998). Claim terms are generally given their plain and ordinary meanings to one of skill in the art when read in the context of the specification and prosecution history. *See Phillips*, 415 F.3d at 1313. "There are only two exceptions to this general rule: 1) when a patentee sets out a definition and acts as his own lexicographer, or 2) when the patentee disavows the full scope of the claim term either in the specification or during prosecution." *Thorner*, 669 F.3d at 1365. The standards for finding lexicography and disavowal are exacting. *Hill-Rom Servs. v. Stryker Corp.*, 755 F.3d 1367, 1371 (Fed. Cir. 2014). "To act as its own lexicographer, a patentee must clearly set forth a definition of the disputed claim term other than its plain and ordinary meaning" and must "clearly express an intent to redefine the term." *Thorner*, 669 F.3d at 1365. Disavowal requires that "the [intrinsic record] makes clear that the invention does not include a particular feature." *SciMed Life Sys., Inc. v. Advanced Cardiovascular Sys., Inc.*, 242 F.3d 1337, 1341 (Fed Cir. 2001).

The ordinary meaning of a claim term is not "the meaning of the term in the abstract." *Eon Corp.*, 815 F.3d at 1321. Instead, "the 'ordinary meaning' of a claim term is its meaning to the ordinary artisan after reading the entire patent." *Id.*; *see also Toro Co. v. White Consol. Indus., Inc.*, 199 F.3d 1295, 1299 (Fed. Cir. 1999) ("Determining the limits of patent claim required understanding its terms in the context which they were used by the inventor, considered by the examiner, and understood in the field of the invention."); *Anderson v. Int'l Eng'g & Mfg., Inc.*, 160 F.3d 1345, 1348-49 (Fed. Cir. 1998) ("a word describing patented technology takes its definition from the context in which it was used by the inventor."). "[T]he person of ordinary skill in the art is deemed to read the claim term not only in the context of the particular claim in which [it] appears, but in the context of the entire patent, including the specification."

Phillips, 415 F.3d at 1313. While claim terms are understood in light of the specification, a claim construction must not import limitations from the specification into the claims. *Id.* at 1323. The Federal Circuit views intrinsic evidence as "the most significant source of the legally operative meaning of disputed claim language." *Vitronics Corp. v. Conceptronic, Inc.*, 90 F.3d 1576, 1582 (Fed. Cir. 1996).

When the meaning of a claim term is in doubt, the specification is the "single best guide to the meaning of a disputed term" and is typically dispositive on the issue of claim construction. *Id.* "It is a bedrock principle of patent law that the claims of a patent define the invention to which the patentee is entitled the right to exclude." *Innova/Pure Water, Inc. v. Safari Water Filtration Systems, Inc.*, 381 F.3d 1111, 1115-16 (Fed. Cir. 2004). However, "it is improper to read limitations from a preferred embodiment described in the specification—even if it is the only embodiment—into the claims absent a clear indication in the intrinsic record that the patentee intended the claims to be so limited." *Liebel-Flarsheim Co. v. Medrad, Inc.*, 358 F.3d 898, 913 (Fed. Cir. 2004). Because claim terms are construed based on the intrinsic evidence to the particular patent at issue, one court's construction of a word in one patent is not conclusive, and may not even be probative, of that word's meaning in another patent. *e.Digital Corp. v. Futurewei Tech., Inc.*, 772 F.3d 723, 727 (Fed. Cir. 2014). It is improper to rely on extrinsic evidence when any ambiguity in the claims can be resolved by reference to the intrinsic record alone. *Vitronics Corp.*, 90 F.3d at 1583.

Determining the ordinary meaning as understood by an ordinary person of skill in the art is the heart of claim construction. *Aylus Networks, Inc. v. Apple Inc.*, 856 F.3d 1353 (Fed. Cir. 2017). In the most desirable situation, the ordinary meaning of a claim's language may be apparent to lay judges, and the claim construction may involve little more than the application of the widely accepted meaning of commonly understood words. *Brown v. 3M*, 264 F.3d 1349, 1352 (Fed. Cir. 2001). "A determination that a claim term 'needs no construction' or has the 'plain and ordinary meaning' may be inadequate when a term has more than one 'ordinary' meaning or when reliance on a

term's 'ordinary' meaning does not resolve the parties' dispute." *Id.* at 1361. This does not mean, however, that a court must attempt the impossible task of resolving all questions of meaning with absolute, unambiguous finality. *Eon Corp.*, 815 F.3d at 1318. "[A] sound claim construction need not always purge every shred of ambiguity." *Id.* (quoting *Acumed LLC v. Stryker Corp.*, 483 F.3d 800, 806 (Fed. Cir. 2007)); *see also Vivid Techs., Inc. v. Am. Science & Eng'g, Inc.*, 200 F.3d 795, 803 (Fed. Cir. 1999) ("[O]nly those terms need be construed that are in controversy, and only to the extent necessary to resolve the controversy.").

"[T]he construction of claims is simply a way of elaborating the normally terse claim language: in order to understand and explain, but not to change, the scope of the claims." *Scripps Clinic & Research Foundation v. Genetech, Inc.*, 927 F.2d 1565, 1580 (Fed. Cir. 1991). Courts have wide latitude in the type of sources that can be used in construing claim meaning. *Phillips*, 415 F.3d at 1324 (the court is not "barred from considering any particular sources or required to analyze sources in any specific sequence."). The claim construction process is not confined to the intrinsic record alone, however extrinsic evidence may not be used "to contradict claim meaning that is unambiguous in light of the intrinsic evidence." *Id.* However, courts must be wary of extrinsic evidence because "legal error arises when a court relies on extrinsic evidence that contradicts the intrinsic record." *Profectus Tech. LLC v. Huawei Techs. Co.*, 823 F.3d 1375, 1379 (Fed. Cir. 2016).

The doctrine of claim differentiation creates a presumption that distinct claims, particularly an independent claim and its dependent claim, have different scopes. *World Class Tech. Corp. v. Ormco Corp.*, 769 F.3d 1120, 1125 (Fed. Cir. 2014). "'In the most specific sense, claim differentiation refers to the presumption that an independent claim should not be construed as requiring a limitation added by a dependent claim.'" *Enzo Biochem, Inc. v. Applera Corp.*, 780 F.3d 1149, 1156-57 (Fed. Cir. 2015) (quoting *Curtiss-Wright Flow Control Corp. v. Velan, Inc.*, 438 F.3d 1374, 1381 (Fed. Cir. 2006) (citing *Nazomi Commc'ns, Inc. v. Arm Holdings, PLC*, 403 F.3d 1364, 1370 (Fed. Cir.

2005))). However, claim differentiation is merely a presumption. *CardSoft (assignment for the Benefit of Creditors), LLC v. VeriFone, Inc.*, 807 F.3d 1346, 1352 (Fed. Cir. 2015). "It is 'a rule of thumb that does not trump the clear import of the specification.'" *Id*. (quoting *Eon-Net LP v. Flagstar Bancorp*, 653 F.3d 1314, 1323 (Fed. Cir. 2011)); *see also Marine Polymer Techs., Inc. v. HemCon, Inc.*, 672 F.3d 1350, 1359 (Fed. Cir. 2012) (en banc) ("[C]laim differentiation is not a hard and fast rule and will be overcome by a contrary construction dictated by the written description or prosecution history." (citation and quotation omitted.)). "There is presumed to be a difference in meaning and scope when different words or phrases are used in separate claims." *Tandon Corp. v. U.S. Int'l Trade Comm'n*, 831 F.2d 1017, 1023 (Fed. Cir. 1987).

IV. ANALYSIS

A. Unverferth Patents

1. Base

Unverferth's Proposed Construction	Meridian's Proposed Construction
Ordinary and customary meaning, no construction necessary	The rotating structure supporting the support arm, i.e. the part labeled as 401 in the '047, '940 and '123 patents

The term "base" is found in claims 1, 2, 9, 16, 20 and 26 of the '047 patent:

Claim 1	a **base** mounted on said frame below said main hopper discharge; a first coupling connecting said first end of said support arm with said **base**, said first coupling being rotatable in relation to said **base** about a first vertical axis of rotation . . . .
Claim 2	The seed or grain tender of claim 1, wherein said support arm extends upwardly at an acute angle from said **base**.
Claim 9	The seed or grain tender of claim 1, wherein said first vertical axis extends through said **base**.
Claim 16	The seed or grain tender of claim 1, further comprising a locking mechanism for locking or unlocking said support arm in relation to said **base**.
Claim 20	a **base** mounted on said frame below said main hopper discharge;

	a first coupling connecting said first end of said support arm with said **base**, said first coupling being rotatable in relation to said **base** about a first vertical axis of rotation . . . .
Claim 26	The seed or grain tender of claim 20, wherein said first vertical axis extends through said **base**.

Doc. No. 36-2 at 16-17. It is also found in claims 1, 8 and 16 of the '940 patent:

Claim 1	a **base** mounted below said main hopper discharge
Claim 8	a **base** positioned below said main hopper
Claim 16	a **base** positioned below said main hopper

Doc. No. 36-3 at 17. The specification references "base" as follows:

- FIG. 4 is a view of a base system for the seed carrier according to an embodiment of the present invention. Col. 2, ll. 27-28.

- FIG. 4 is a view of the pivoting base of the support arm 102. As shown, the support arm 102 can be pivotably coupled to a base 401 at a center point so that the support arm 102 is rotatable about a vertical axis. Wheels 403 provide support and can run along a track 402 to facilitate the support arm's 102 motion about the perimeter of the base 401. The support arm 102 can be locked into a selected position of the base 401 by engaging a pin (not shown) with one of a plurality of the holes 407 distributed around the base 401. Col. 3, ll. 38-46.

- FIG. 5 is an alternative view of the support arm base. As shown, level mechanism 404 includes a handle 504 coupled with a cross-bars 505 and 506. Cross-bar 506 is coupled to cross-bar 505 on one end and to a plate 508 having a pin 509 on the other end, and with a pivoting coupling 502 at a point near the plate. Rotating the handle 504 applies a downward force to crossbar 506 causing it to rotate about the coupling to raise the plate 508 to disengage the pin 509. While disengaged, the base 401 is free to rotate about its vertical axis . . . . Col 3, ll. 54-63.

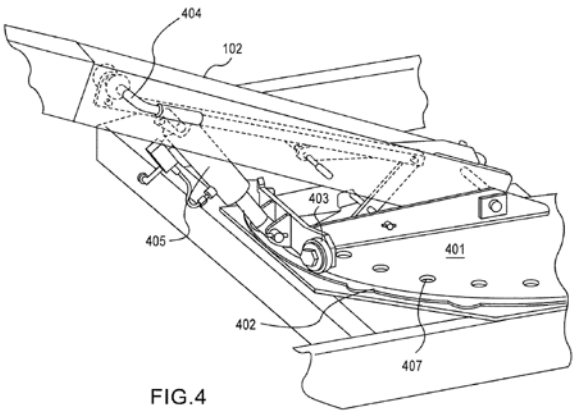

FIG.4

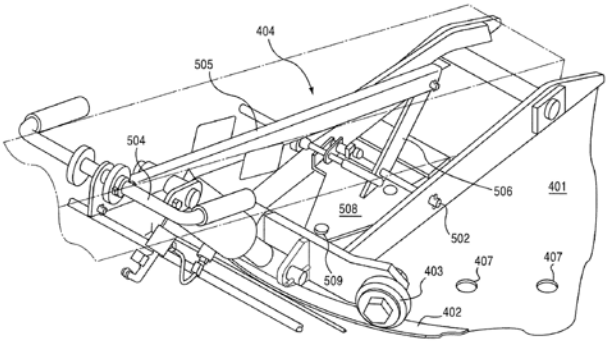

FIG.5

See Doc. No. 36-2 at 6-7, 15.

I decline to adopt Meridian's proposed construction because it conflicts with the claim language, which provides no indication that the base itself rotates, as Meridian's proposed construction suggests. Meridian's proposed construction is based on the illustrated embodiment in the specification, but such exactness (part labeled as 401) is not found in the claims itself. *See Liebel-Flarsheim Co.*, 358 F.3d at 906 ("Even when the specification describes only a single embodiment, the claims of the patent will not be read restrictively unless the patentee has demonstrated a clear intention to limit the claim scope using words or expressions of manifest exclusion or restriction.") (internal quotation omitted).[2] All claims identified above disclose a base without reference to rotatability. The closest reference to any rotation is in: (1) the independent claims (Claims 1 and 20 of the '047 patent) claiming a seed or grain tender comprising . . . "a first coupling connecting said first end of said support arm with said base, said first coupling being rotatable in relation to said base about a first vertical axis of rotation" and (2) the specification describing Figure 5 ("While disengaged, the base 401 is free to rotate about

[2] I disagree with Meridian that the Federal Circuit "clarified" this standard in *Nystrom v. Trex Co.*, 424 F.3d 1136, 1142 (Fed. Cir. 2005) and *Kinetic Concepts, Inc. v. Blue Sky Med. Grp., Inc.*, 554 F.3d 1010, 1018 (Fed. Cir. 2009). Those cases did not discuss *Liebel-Flarsheim,* which continues to be frequently cited by the Federal Circuit Court of Appeals.

its vertical axis . . . .”).[3] Adopting Meridian’s proposed construction would result in reading limitations from the specification into the claims. *See Phillips*, 415 F.3d at 1323 (“although the specification often describes very specific embodiments of the invention, we have repeatedly warned against confining the claims to those embodiments.”). For these reasons, I find that no construction of the term “base” is necessary and that it should be given its ordinary and customary meaning.

2. Vertical and Horizontal

Vertical	
Unverferth’s Proposed Construction	**Meridian’s Proposed Construction**
Generally upright	Perpendicular to the plane of the horizon or to a primary axis

Horizontal	
Unverferth’s Proposed Construction	**Meridian’s Proposed Construction**
Generally side-to-side	Parallel to the horizon: being on a level

The term “vertical” appears in claims 1, 9, 20 and 26 of the ‘047 patent:

Claim 1	a first coupling connecting said first end of said support arm with said base, said first coupling being rotatable in relation to said base about a first **vertical** axis of rotation, and said first end of said support arm being rotatable in relation to said first coupling about a first horizontal axis of rotation; a second coupling connecting said second end of said support arm with said conveyor at an approximate center of gravity of said conveyor, said second coupling defining a second **vertical** axis of rotation that is not parallel to said conveyor longitudinal axis, and said conveyor being rotatable in relation to said second end of said support arm about said second **vertical** axis of rotation between an unloading position . . . and a loading position . . . .
Claim 9	The seed or grain tender of claim 1, wherein said first **vertical** axis extends through said base.

[3] The specification makes clear that Figure 5 is an “alternative view” of the support arm base.

Claim 20	a first coupling connecting said first end of said support arm with said base, said first coupling being rotatable in relation to said base about a first **vertical** axis of rotation, and said first end of said support arm being rotatable in relation to said first coupling about a first horizontal axis of rotation; a second coupling connecting said second end of said support arm with said conveyor at an approximate center of gravity of said conveyor, said second coupling defining a second **vertical** axis of rotation that is not parallel to said conveyor longitudinal axis, and said conveyor being rotatable in relation to said second end of said support arm about said second **vertical** axis of rotation between an unloading position . . . and a loading position . . . .
Claim 26	The seed or grain tender of claim 20, wherein said first **vertical** axis extends through said base.

Doc. No. 36-2 at 16-17. It is also disclosed in claims 1, 2, 3, 8, 10 and 16 in the '940 patent:

Claim 1	a first coupling connecting said first end of said support arm with said base, said first coupling being rotatable in relation to said base about a first **vertical** axis of rotation, and said first end of said support arm being rotatable in relation to said first coupling about a first horizontal axis of rotation; a second coupling connecting said second end of said support arm with said conveyor at an approximate center of gravity of said conveyor, said second coupling defining a second **vertical** axis of rotation that is not parallel to said conveyor longitudinal axis, and said conveyor being rotatable in relation to said second end of said support arm about said second **vertical** axis of rotation between an unloading position . . . and a loading position . . . .
Claim 2	The seed or grain tender of claim 1, wherein said first **vertical** axis of rotation extends through said main hopper discharge.
Claim 3	The seed or grain tender of claim 1, wherein said second **vertical** axis of rotation extends through said approximate center of gravity of said conveyor.
Claim 8	a first coupling connecting said first end of said support arm with said base, said first coupling being rotatable about a first **vertical** axis of rotation, and said first end of said support arm being rotatable about a first horizontal axis of rotation;

	a second coupling connecting said second end of said support arm with said conveyor at an approximate center of gravity of said conveyor, said second coupling defining a second **vertical** axis of rotation that is not parallel to said conveyor longitudinal axis, and said conveyor being rotatable about said second **vertical** axis of rotation between an unloading position . . . and a loading position . . . .
Claim 10	The seed or grain tender of claim 8, wherein said second **vertical** axis of rotation extends through said approximate center of gravity of said conveyor.
Claim 16	a first coupling connecting said first end of said support arm with said base, said first coupling being rotatable about a first **vertical** axis of rotation, and said first end of said support arm being rotatable about a first horizontal axis of rotation; a second coupling connecting said second end of said support arm with said conveyor at an approximate center or gravity of said conveyor, said second coupling defining a first conveyor axis of rotation that is not parallel to said conveyor longitudinal axis, and said conveyor being rotatable about said first conveyor axis of rotation between an unloading position . . . and a loading position . . . .

Doc. No. 36-3 at 17. Vertical is also found in claims 7, 16 and 17 in the '123 patent:

Claim 7	The seed or grain tender of claim 1, wherein said third axis of rotation is oriented at an angle having a **vertical** component.
Claim 16	The seed or grain tender of claim 10, wherein said third axis of rotation is oriented at an angle having a **vertical** component.
Claim 17	The seed or grain tender of claim 16, wherein said first axis of rotation is **vertical**.

Doc. No. 36-4 at 17. The term "horizontal" appears in claims 1, 5, 6, 20, 22 and 23 of the '047 patent:

Claim 1	a first coupling connecting said first end of said support arm with said base, said first coupling being rotatable in relation to said base about a first vertical axis of rotation, and said first end of said support arm being rotatable in relation to said first coupling about a first **horizontal** axis of rotation;
Claim 5	The seed or grain tender of claim 1, wherein said conveyor is rotatable in relation to said second coupling about a second **horizontal** axis of rotation.

Claim 6	The seed or grain tender of claim 5, wherein said second **horizontal** axis of rotation extends through said second coupling.
Claim 20	a first coupling connecting said first end of said support arm with said base, said first coupling being rotatable in relation to said base about a first vertical axis of rotation, and said first end of said support arm being rotatable in relation to said first coupling about a first **horizontal** axis of rotation;
Claim 22	The seed or grain tender of claim 20, wherein said conveyor is rotatable in relation to said coupling about a second **horizontal** axis of rotation.
Claim 23	The seed or grain tender of claim 22, wherein said second **horizontal** axis of rotation extends through said second coupling.

Doc. No. 36-2 at 17-18. "Horizontal" is also found in claims 1, 4, 6, 11, 14, 16, 19 and 22 of the '940 patent:

Claim 1	a first coupling connecting said first end of said support arm with said base, said first coupling being rotatable in relation to said base about a first vertical axis of rotation, and said first end of said support arm being rotatable in relation to said first coupling about a first **horizontal** axis of rotation;
Claim 4	The seed or grain tender of claim 1, wherein said first **horizontal** axis extends through said first end of said support arm.
Claim 6	The seed or grain tender of claim 1, further comprising a hydraulic piston extending at an acute angle relative to a **horizontal** plane to connect with a portion of said support arm spaced from said first **horizontal** axis of rotation.
Claim 11	The seed or grain tender of claim 8, wherein said first **horizontal** axis extends through said first end of said support arm.
Claim 14	The seed or grain tender of claim 8, further comprising a hydraulic piston extending at an acute angle relative to a **horizontal** plane to connect with a portion of said support arm spaced from said first **horizontal** axis of rotation.
Claim 16	a first coupling connecting said first end of said support arm with said base, said first coupling being rotatable about a first vertical axis of rotation, and said first end of said support arm being rotatable about a first **horizontal** axis of rotation;
Claim 19	The seed or grain tender of claim 16, wherein said first **horizontal** axis extends through said first end of said support arm.

Claim 22	The seed or grain tender of claim 16, further comprising a hydraulic piston extending at an acute angle relative to a **horizontal** plane to connect with a portion of said support arm spaced from said first **horizontal** axis of rotation.

Doc. No. 36-3 at 17-18. Finally, it is found as follows in claims 1, 18 and 20 of the '123 patent:

Claim 1	a hydraulic piston extending at an acute angle relative to a **horizontal** plane to connect with a portion of said support arm spaced from said second axis of rotation.
Claim 18	The seed or grain tender of claim 17, wherein said second axis of rotation is **horizontal.**
Claim 20	The seed or grain tender of claim 10, further comprising a hydraulic piston extending at an acute angle relative to a **horizontal** plane to connect with a portion of said support arm spaced from said second axis of rotation.

Doc. No. 36-4 at 17-18. The specification references the term "vertical" as follows:

- According to an embodiment of the present invention, the conveyor can be rotated through at least 180 degrees about a vertical axis and so that it may be positioned in either a forward or rearward transport position. Col. 2, ll. 8-11 of the '047 patent.

- FIG. 4 is a view of the pivoting base of the support arm 102. As shown, the support arm 102 can be pivotably coupled to a base 401 at a center point so that the support arm 102 is rotatable about a vertical axis. Col. 3, ll. 38-41 of the '047 patent.

Doc. No. 36-2 at 14-15. The term "horizontal" is not found in the specification. As apparent from the intrinsic evidence, the vertical axis allows the support arm to rotate from side-to-side while the horizontal axis allows the support arm to move up and down.

I decline to adopt Meridian's proposed construction of vertical because it imposes a particular angle (90 degrees) that would exclude preferred embodiments. *See Kaneka Corp. v. Xiamen Kingdomway Grp. Co.*, 790 F.3d 1298, 1304 (Fed. Cir. 2015) ("A claim construction that excludes a preferred embodiment is rarely, if ever, correct.");

Merck & Co. v. Teva Pharms. USA, Inc., 347 F.3d 1367, 1371 (Fed. Cir. 2003) ("A fundamental rule of claim construction is that terms in a patent document are construed with the meaning with which they are presented in the patent document. Thus claims must be construed so as to be consistent with the specification, of which they are a part.") (citations omitted). The support arm would not be able to move as intended if required to consistently maintain a 90-degree angle. *See also* Doc. Nos. 40-2 and 40-3 (showing a comparison of a 90-degree axis relative to the horizon versus the second coupling's vertical axis when in the loading and unloading positions). The claims and the specification specifically provide that the support arm's height is adjustable. *See* claims 1, 11, 20 and 28, col. 3, ll. 51-53, col. 1, ll. 65-68 of the '047 patent (stating in claim 11 "said second end of said support arm is pivotable between a range of heights"). Changing the height of the support arm necessarily changes the precise angle of the axis such that it varies a few degrees above and below 90 degrees but remains generally upright.

Meridian relies heavily on the prosecution history with respect to "vertical." It notes that the '047 patent application included the phrase "substantially vertical" in claim 6. The Examiner rejected that claim (among others), citing another patent (Klatt) as "teach[ing] a grain seeder loader system wherein said conveyor is rotatably coupled with said support arm such that said conveyor can rotate about a substantially vertical axis." Doc. No. 37-7 at 34. The patentee amended and cancelled some claims and submitted new claims, but the Examiner again found a prior art reference (Furrer in view of Baskerville) disclosing a "substantially vertical axis" limitation.[4] *See* Doc. No. 37-6 at

[4] Unverferth points out that Furrer did not teach a substantially vertical axis, but that the Examiner relied on Baskerville for this feature. *See* Doc. No. 40-4 at 8. It notes that Baskerville disclosed a conveyor that is rotatable about a range of axes of rotation including a precisely mathematically vertical axis of rotation. Doc. No. 40 at 14 (citing Doc. No. 40-5). Nonetheless, the Examiner stated, "it would have been obvious to a person having ordinary skill in the art, at the time of invention was made, to include the mechanism of Baskerville in the device of Furrer

77-81. The patentee then canceled all claims and submitted new claims, which recited the "vertical axis" limitation without any words of approximation. *See* Doc. No. 37-5 at 57-68. Those claims (with some amendments) were allowed and became the '047 patent. *See id.* at 17. Meridian argues Unverferth surrendered any approximation of the word "vertical" through omission and prosecution history estoppel.

Unverferth argues that nothing in the prosecution history indicates the patentee intentionally removed the word substantially or met the exacting standard required for prosecution history disclaimer. It states it did not need to change "substantially vertical axis" to "vertical axis" to distinguish the art cited during prosecution and that the Examiner used the terms interchangeably during prosecution. It points out that the claim amendment included much more subject matter than changing "substantially vertical axis" to "vertical axis." *See* Doc. No. 40 at 14 (citing Doc. No. 40-6).[5] Because the patentee never discussed its reasons for cancelling the dependent claim with the term "substantially vertical," Unverferth argues there was no disavowal. *Id.* (citing *3M Innovative Props. Co. v. Tredegar Corp.*, 725 F.3d 1315, 1325 (Fed. Cir. 2013) (finding no disavowal when the term "substantially continuous contact" was changed to "continuous contact" without explanation)).

While Unverferth views this issue as one of disavowal, Meridian relies on prosecution history estoppel by omission. These are distinct concepts, but are based on the general rule that "a claim in a patent as allowed must be read and interpreted with reference to claims that have been cancelled or rejected, and the claims allowed cannot

---

because Furrer has contemplated reorienting the conveyor and in order to increase the versatility of the system as well." *See* Doc. No. 40-4 at 8-9.

[5] Unverferth's point that the amendment encompassed more than changing "substantially vertical" to "vertical" is well taken. *Compare* Doc. No. 37-7 at 77-78 (showing claims as originally presented in '867 application) with Doc. No. 40-6 (showing amended claims after claims 1 through 11 were cancelled).

by construction be read to cover what was thus eliminated from the patent." *See Schriber-Schroth Co. v. Cleveland Trust Co.*, 311 U.S. 211, 220-21 (1940). Disavowal or disclaimer prevents "patentees from recapturing through claim interpretation meanings disclaimed during prosecution." *Omega Engineering, Inc. v. Raytek Corp.*, 334 F.3d 1314, 1323 (Fed. Cir. 2003). "[F]or prosecution disclaimer to attach, . . . precedent requires that the alleged disavowing actions or statements made during prosecution be both clear and unmistakable." *Id.* at 1325-26. "Thus, when the patentee unequivocally and unambiguously disavows a certain meaning to obtain a patent, the doctrine of prosecution history disclaimer narrows the meaning of the claim consistent with the scope of the claim surrendered." *Biogen Idec, Inc. v. GlaxoSmithKline LLC*, 713 F.3d 1090, 1095 (Fed. Cir. 2013). Disclaimer can occur through amendment or argument. *See Standard Oil Co. v. Am. Cyanamid Co.*, 774 F.2d 448, 452 (Fed. Cir. 1985). "Where the alleged disavowal is ambiguous, or even 'amenable to multiple reasonable interpretations,' [the Federal Circuit has] declined to find prosecution disclaimer." *Avid Tech., Inc. v. Harmonic, Inc.*, 812 F.3d 1040, 1045 (Fed. Cir. 2016) (quoting *Cordis Corp. v. Medtronic AVE, Inc.*, 339 F.3d 1352, 1359 (Fed. Cir. 2003)). The party seeking to invoke prosecution history disclaimer bears the burden of proving the existence of a "clear and unmistakable" disclaimer. *See Elbex Video, Ltd. v. Sensormatic Elecs. Corp.*, 508 F.3d 1366, 1371 (Fed. Cir. 2007).

"Prosecution history estoppel applies as part of an infringement analysis to prevent a patentee from using the doctrine of equivalents to recapture subject matter surrendered from the literal scope of a claim during prosecution." *Pharma Tech Sols., Inc. v. LifeScan, Inc.*, 942 F.3d 1372, 1380 (Fed. Cir. 2019). The primary difference between prosecution history estoppel and prosecution disclaimer is that prosecution history estoppel applies to the doctrine of equivalents,[6] *see Warner-Jenkinson,* 520 U.S. at 30,

[6] Under the doctrine of equivalents "a product or process that does not literally infringe upon the express terms of a patent claim may nonetheless be found to infringe if there is 'equivalence'

whereas prosecution disclaimer applies to literal infringement. *See AccuScan, Inc. v. Xerox Corp.*, 76 F. App'x. 290, 292 (Fed. Cir. 2003). The Federal Circuit has explained the distinction as follows:

> Prosecution history estoppel applies as part of an infringement analysis to prevent a patentee from using the doctrine of equivalents to recapture subject matter surrendered from the literal scope of a claim during prosecution. Prosecution disclaimer, on the other hand, affects claim construction and applies where an applicant's actions during prosecution prospectively narrow the literal scope of an otherwise more expansive claim limitation. Though distinct, both doctrines serve to constrain the enforceable scope of patent claims commensurate with any subject matter surrendered during prosecution to obtain the patent, and a single action during prosecution can engender both a prosecution disclaimer and a prosecution history estoppel.

Trading Techs. Int'l, Inc. v. Open E Cry, LLC, 728 F.3d 1309, 1322 (Fed. Cir. 2013) (internal citations omitted). Prosecution history estoppel requires three steps: (1) the patentee must have filed an amendment with the United States Patent and Trademark Office (USPTO) that narrowed the literal scope of a claim; (2) the reason for the narrowing amendment must be "a substantial one relating to patentability" and (3) the subject matter surrendered by the narrowing amendment must include the particular equivalent at issue. *See Festo v. Shoketsu Kinzoku Kogyo Kabushiki*, 344 F.3d 1359, 1366-67 (Fed. Cir. 2003).

Meridian has failed to meet its burden to show that prosecution history disclaimer/disavowal applies here. There is no clear and unequivocal disavowal of claim scope. While the patentee amended its claims (including a claim containing the phrase "substantially vertical"), nothing in the record demonstrates a clear and unmistakable

---

between the element of the accused product or process and the claimed elements of the patented invention." *Warner-Jenkinson, Co. v. Hilton Davis Chemical Co.*, 520 U.S. 17, 21 (1997). "The doctrine of equivalents allows the patentee to claim those insubstantial alterations that were not captured in drafting the original patent claim but which could be created through trivial changes." *Festo Corp. v. Shoketsu Kinzoku Kogyo Kabushiki Co.*, 535 U.S. 722, 733 (2002).

disavowal of "substantially vertical" by the newly-submitted claim. As noted in the patentee's response, the new claims 12-49 were submitted to be "patentable over the prior art of record because none of the art, alone or in combination, teaches or suggests a seed or grain tender having, among other things[:]"

> a first coupling connecting a first end of a support arm with a base below the hopper such that the coupling is rotatable in relation to the base about a first vertical axis of rotation and the support arm is rotatable in relation to the first coupling about a first horizontal axis of rotation, and a second coupling connecting a second end of the support arm with a conveyor at an approximate center of gravity of the conveyor such that the conveyor is rotatable about a second vertical axis of rotation that is not parallel to a longitudinal axis of the conveyor, between an unloading position wherein a hopper at one end of the conveyor is disposed below a main hopper discharge to receive agricultural product from the main hopper and a loading position wherein a conveyor discharge is disposed above the main hopper to dispense agricultural product into the main hopper.

Doc. No. 40-6 at 12-13. The new claims encompass significantly more than the term "substantially vertical" compared to the previous, cancelled claims. *See* Doc. No. 37-6 at 92-94 (showing amended claims after claims 6-8 were cancelled and claim 11 was added). It is not clear whether the Examiner required the change from substantially vertical to vertical to obtain the patent or whether it was one of the many other changes. Without explanation, argument, or other remarks regarding the purpose of that specific amendment, the amendment is subject to more than one interpretation. *See Omega Engineering, Inc.*, 334 F.3d at 1330 (". . . there is more than one reasonable basis for the amendment, rendering the intent underlying the amendment ambiguous and thus negating the possibility of the disclaimer being unmistakable."); *Schwing GmbH v. Putzmeister Aktiengesellschaft*, 305 F.3d 1318, 1324-25 (Fed. Cir. 2002) ("[P]rosecution history . . . cannot be used to limit the scope of a claim unless the applicant took a position before the PTO that would lead a competitor to believe that the applicant had disavowed coverage of the relevant subject matter.").

For the same reason, prosecution history estoppel does not apply. There is no clear and unmistakable indication in the prosecution history that the reason for removing "substantially" from "substantially vertical" was "a substantial one relating to patentability." *Festo*, 344 F.3d at 1366-67. As such, Meridian has not met its burden of proving that either prosecution history disclaimer/disavowal or prosecution history estoppel apply based on the submission of new claims that did not include the previous "substantially vertical" term.

I further reject Meridian's argument that in the absence of words of approximation, the court must apply a strict boundary to the specified parameter. The case law provides that words of approximation *may* be used to avoid a strict numerical boundary to a specified parameter, but this does not require the court to apply a strict boundary to a specified parameter in the absence of such words of approximation. Horizontal and vertical are non-numerical claim terms and are subject to the same rules of construction as any other claim term. *See Ecolab, Inc. v. Envirochem, Inc.*, 264 F.3d 1358, 1367 (Fed. Cir. 2001) ("nonnumerically limited descriptive claim terms are construed using the same rules of construction as any other claim term"). Vertical and horizontal, as used in the patents and supported by the intrinsic evidence, are comparative terms used to distinguish axes of rotation and the movement of structures about those axes. *See Cheese Sys., Inc. v. Tetra Pak Cheese & Powder Sys.*, 725 F.3d 1341, 1350 (Fed. Cir. 2013) ("a person of ordinary skill in this art would understand 'horizontal' as a term used to distinguish horizontal vats from vertical ones, not to require precise horizontal orientation of the shafts. Thus, the claim term 'horizontal' in this art permits some degree of incline."). Given the way the conveyor is designed to move up and down and side to side via the support arm, limiting "vertical" and "horizontal" to strict measurements would leave the product unworkable or require it to function in a way not disclosed in the patent. For these reasons, vertical will be construed as "generally upright" and horizontal will be construed as "generally side-to-side."

3. Parallel

Unverferth's Proposed Construction	Meridian's Proposed Construction
Side-by-side separated by generally the same distance	Aligned along a line that does not cross another line of reference

The term "parallel" is found in claims 3 and 20 of the '047 patent:

Claim 3	The seed or grain tender of claim 2, wherein said conveyor is **parallel** to said support arm in said unloading position.
Claim 20	said conveyor is disposed **parallel** to and above said support arm in said unloading position.

Doc. No. 36-2 at 17-18. Figure 6 of the '047 patent depicts an embodiment of the seed or grain tender in the unloading position.

Unverferth points out that the support arm and conveyor as shown in Figure 6 are not mathematically parallel because the distance between the support arm and conveyor slightly decreases as both get closer to the main hopper. Unverferth explains that this is a function of how the hopper, support arm, and conveyor are assembled and function with respect to one another:

> The support arm and the conveyor are attached by a second coupling at the approximate center of gravity of the conveyor, which allows for the conveyor to rotate about the support arm and thus requires some separation between the support arm and conveyor. The conveyor, however is not attached to the support arm at the end of the support arm location under the main hopper. Thus, the conveyor can rest closer to the support arm at the end under the main hopper.

Doc. No. 36 at 16. This is consistent with the claim language. *See* claim 3 of the '047 patent ("The seed or grain tender of claim 2, wherein said conveyor is parallel to said support arm in said unloading position."); claim 1 of the '047 patent ("a second coupling connecting said second end of said support arm with said conveyor at an approximate center of gravity of said conveyor, said second coupling defining second vertical axis of rotation . . . .").

The parties rely on similar arguments regarding this term as they did for the terms vertical and horizontal. That is, whether the term "parallel" requires mathematical precision. As stated above, the court is not obligated to apply a strict boundary to the specified parameter in the absence of words of approximation. I agree with Unverferth that mathematical precision as to the term "parallel" would lead to an absurd result that would exclude the preferred embodiment. Parallel will be construed as "side-by-side separated by generally the same distance."

4. Below

Unverferth's Proposed Construction	Meridian's Proposed Construction
Lower than	Directly under the main hopper discharge

The term "below" is used in the claims to describe the location of the base, the conveyor hopper (in unloading position) and the support arm in relation to the hopper or the main hopper discharge. Below is referenced in claims 1 and 20 of the '047 patent:

Claim 1	a base mounted on said frame **below** said main hopper discharge
Claim 20	a base mounted on said frame **below** said main hopper discharge

Doc. No. 36-2 at 17-18. It is also referenced in claims 1, 8 and 16 of the '940 patent:

Claim 1	a base mounted **below** said main hopper discharge
Claim 8	a base positioned **below** said main hopper
Claim 16	a base positioned **below** said main hopper

Doc. No. 36-3 at 17. Finally, "below" can be found in claims 1, 9 and 21 of the '123 patent:

Claim 1	said first end of said support arm being located **below** said main hopper and being rotatable about a first axis of rotation . . . . . . said conveyor hopper is disposed **below** said main hopper discharge . . . .
Claim 9	The seed or grain tender of claim 1, further comprising a stand coupled with said first end of said conveyor and movable between a stowed position

	allowing said conveyor hopper to be positioned **below** said main hopper discharge . . . .
Claim 21	The seed or grain tender of claim 10, further comprising a stand coupled with said first end of said conveyor and movable between a stowed position allowing said conveyor hopper to be positioned **below** said main hopper discharge . . . .

Doc. No. 36-4 at 17-18.

Unverferth suggests that the surrounding claim language provides the sufficient relational aspect and that there is no support for "directly." Meridian argues that Unverferth's definition of "lower than" suggests an extended plane upon which any object that is under that plane is "below" it even if the object is not directly or fully under the named structure (hopper, hopper discharge). The issue arises because the main hopper discharge is a small area whereas the hopper (extending outward) is a large area. Because the claims reference components that are "below" both the hopper and the hopper discharge, I decline to adopt Meridian's proposed construction of "directly under the main hopper discharge." Such a construction would not only render certain language in the claims superfluous or nonsensical, but it would add a limitation not supported by the claim language in the '940 and '123 patents.

I further find that the modifier "directly" is not supported by the intrinsic evidence. I agree with Unverferth that the claim language provides the relevant relational aspect of the base to other structures. However, I am concerned that "lower than" may be too broad to encompass a reading that an object simply must be on a lower horizontal plane. For instance, the following could be interpreted as the box being "lower than" the line:

The word "below" could account for the first two scenarios, but I find that one would not use the word below to describe the box in relation to the line in the third scenario. In this sense, I find the construction "lower than" to be too imprecise. I find that "under" without the modifier "directly" is supported by the intrinsic evidence. For these reasons, the term "below" will be construed as "under."

5. Locking Mechanism

Unverferth's Proposed Construction	Meridian's Proposed Construction
Ordinary and customary meaning, no construction necessary	Governed by 35 U.S.C. § 112(6), means-plus-function. Structure: the locking mechanism includes a pin releasably engageable with one of a plurality of holes formed in the base Function: locking or unlocking the support arm in relation to the base

Locking mechanism is referenced in claims 16 and 20 of the '047 patent:

Claim 16	The seed or grain tender of claim 1, further comprising a **locking mechanism** for locking or unlocking said support arm in relation to said base.
Claim 20	. . . a **locking mechanism** for locking and unlocking said support arm in relation to said base.

Doc. No. 36-2 at 17-18.

Unverferth argues that "locking" imparts structure into the term "mechanism" and the specification discloses two embodiments for locking the support arm in relation to the base:

- A pin-and-hole lock – "The support arm 102 can be locked into a selected position of the base 401 by engaging a pin (not shown) with one of a plurality of the holes 407 distributed around the base 401. The pin is disengaged with a hole by actuating a lever mechanism 404, which lifts the pin out of a hole.

> The lever mechanism 404 may be spring actuated to bias the pin toward the holes, so that simply releasing the lever will allow the pin to engage with one of the holes 407. . . . As shown, lever mechanism 404 includes a handle 504 coupled with a cross-bars 505 and 506. Cross-bar 506 is coupled to cross-bar 505 on one end and to a plate 508 having a pin 509 on the other end, and with a pivoting coupling 502 at a point near the plate. Rotating the handle 504 applies a downward force to crossbar 506 causing it to rotate about the coupling 502 to raise the plate 508 to disengage the pin 509. While disengaged, the base 401 is free to rotate about its vertical axis. Springs may be provided for biasing the pin 509 toward the holes 407 for engaging therewith, or the pin 509 can be engaged by gravity." *See* Col. 3, ll. 43-51, 54-65 of the '047 patent.

- A hydraulic piston – "Also shown, a hydraulic piston 405 is coupled with the support arm 102 for adjusting the height of the support arm." *See* Col. 3, ll. 51-53 of the '047 patent.

Doc. No. 36-2 at 15. The pin-and-hole lock fixes the arm's side-to-side movement while the hydraulic piston fixes the arm's up-and-down movement. While the specification refers to these two embodiments, Unverferth argues that "locking mechanism" is not limited to these embodiments.

A means plus function term is governed by 35 U.S.C. § 112(f), which states:

> An element in a claim for a combination may be expressed as a means or step for performing a specified function without the recital of structure, material, or acts in support thereof, and such claim shall be construed to cover the corresponding structure, material, or acts described in the specification and equivalents thereof.

35 U.S.C. § 112(f). The Federal Circuit has explained:

> In enacting this provision, Congress struck a balance in allowing patentees to express a claim limitation by reciting a function to be performed rather than by reciting structure for performing that function, while placing specific constraints on how such a limitation is to be construed, namely, by restricting the scope of coverage to only the structure, materials, or acts described in the specification as corresponding to the claimed function and equivalents thereof.

Williamson v. Citrix Online, LLC, 792 F.3d 1339, 1347 (Fed. Cir. 2015) (citing *Northrop Grumman Corp. v. Intel Corp.*, 325 F.3d 1346, 1350 (Fed. Cir. 2003)). The standard for determining whether a term falls outside the scope of § 112 is "whether the words of the claim are understood by persons of ordinary skill in the art to have a sufficiently definite meaning as to the name for the structure." *Williamson*, 792 F.3d at 1349 (citing *Greenberg v. Ethicon Endo-Surgery, Inc.*, 91 F.3d 1580, 1584 (Fed. Cir. 1996)). Lack of the word "means" establishes a rebuttable presumption that § 112(f) does not apply. *Id.* at 1348. The presumption can be rebutted if "the challenger demonstrates that the claim term fails to recite sufficiently definite structure or else recites function without reciting sufficient structure for performing that function." *Id.* (quoting *Watts v. XL Sys., Inc.*, 232 F.3d 877, 880 (Fed. Cir. 2000) (internal quotation marks omitted)). The claim language should be read in light of the specification in determining whether it recites sufficiently definite structure to avoid § 112(f). *See Robert Bosch, LLC v. Snap-On Inc.*, 769 F.3d 1094, 1099 (Fed. Cir. 2014).

As the party invoking § 112(f), it is Meridian's burden to prove that it applies. *See Diebold Nixdorf, Inc. v. Int'l Trade Comm'n*, 899 F.3d 1291, 1298 (Fed. Cir. 2018). Meridian relies on the words "mechanism" and "for" in the claims. *See* Doc. No. 39 at 14 (citing *Williamson*, 792 F.3d at 1350 and *Media Rights Techs., Inc. v. Capital One Fin. Corp.*, 800 F.3 1366, 1373 (Fed. Cir. 2015)). The word mechanism does not, on its own provide any indication of structure. *See Williamson*, 792 F.3d at 1350 ("Generic terms such as 'mechanism,' 'element, 'device,' and other nonce words that reflect nothing more than verbal constructs may be used in a claim in a manner that is tantamount to using the word 'means.'").

The Federal Circuit has recognized that "[m]any devices take their names from the functions they perform" citing "lock" as an example. *Greenberg*, 91 F.3d at 1583. The term in *Greenberg* was "detent mechanism." The court noted what is important "is not simply that 'detent' or 'detent mechanism' is defined in terms of what it does, but that the term, as the name for structure, has a reasonably well understood meaning in the

art." *Id.* Unverferth argues that locking mechanism states sufficiently definite structure because jurors are familiar with what locks do. It provides the following definitions of lock:

- "a convtrivance to keep a wheel from revolving, or from turning to right or left." *Lock*, The Oxford English Dictionary (2nd ed. 1989)

- "a mechanism for keeping a door, lid, etc., fastened, typically operated only by a key of a particular form . . . a similar device used to prevent the operation or movement of a vehicle or other machine." *Lock*, The New Oxford American Dictionary (2nd ed. 2005)

See Doc. Nos. 36-11 and 36-12.

I find that "locking mechanism" is similar to "detent mechanism" in that the term "locking" sufficiently modifies the word "mechanism" to give the term "locking mechanism" sufficiently definite meaning, even if it does not identify a single well-defined structure. *See Greenberg*, 91 F.3d at 1583 ("It is true that the term 'detent' does not call to mind a single well-defined structure, but the same could be said of other commonplace structural terms such as 'clamp' or 'container.'"); *Personalized Media Comm'cns, LLC v. Int'l Trade Comm'n*, 161 F.3d 696, 705 (Fed. Cir. 1998) ("neither the fact that a 'detector' is defined in terms of its function, nor the fact that the term 'detector' does not connote a precise physical structure in the minds of those of skill in the art detracts from the definiteness of structure."); *CCS Fitness, Inc. v. Brunswick Corp.*, 288 F.3d 1359, 1370 (Fed. Cir. 2002) ("a term need not connote a precise physical structure in order to avoid the ambit of that provision [§112(6)]."). "Locking mechanism" identifies a particular type of device and the idea of a lock as a structure is commonly understood as fixing something in place. A locking mechanism could be accomplished in numerous ways and I do not find that the precise details of the locking mechanisms described in the specification are essential to the claim or that the patentee intended to limit "locking mechanism" to those embodiments. For these reasons, I find

that no construction is necessary for "locking mechanism." It will be given its ordinary and customary meaning.

6. The Axes of Rotation Terms

a. First Conveyor Axis of Rotation

Unverferth's Proposed Construction	Meridian's Proposed Construction
Ordinary and customary meaning, no construction necessary	Second vertical axis of rotation

b. First Axis of Rotation

Unverferth's Proposed Construction	Meridian's Proposed Construction
Ordinary and customary meaning, no construction necessary	First vertical axis of rotation

c. Second Axis of Rotation

Unverferth's Proposed Construction	Meridian's Proposed Construction
Ordinary and customary meaning, no construction necessary	First horizontal axis of rotation

d. Third Axis of Rotation

Unverferth's Proposed Construction	Meridian's Proposed Construction
Ordinary and customary meaning, no construction necessary	Second vertical axis of rotation

The claim terms (and Meridian's proposed constructions) are used in each of the patents as follows:

‘047 Patent	
Claim 1	a first coupling connecting said first end of said support arm with said base, said first coupling being rotatable in relation to said base about a **first vertical axis of rotation**, and said first end of said support arm being rotatable in relation to said first coupling about a **first horizontal axis of rotation**. a second coupling connecting said second end of said support arm with said conveyor at an approximate center of gravity of said conveyor, said second coupling defining a **second vertical axis of rotation** that is not parallel to said conveyor longitudinal axis, and said conveyor being rotatable in relation to said second end of said support arm about said **second vertical axis of rotation** between an unloading position . . . and a loading position . . . .
Claim 5	The seed or grain tender of claim 1, wherein said conveyor is rotatable in relation to said second coupling about a **second horizontal axis of rotation**
Claim 6	The seed or grain tender of claim 5, wherein said **second horizontal axis of rotation** extends through said second coupling.
Claim 8	The seed or grain tender of claim 1, wherein said **first vertical axis** extends through said first end of said support arm
Claim 9	The seed or grain tender of claim 1, wherein said **first vertical axis** extends through said base
Claim 20	a first coupling connecting said first end of said support arm with said base, said first coupling being rotatable in relation to said base about a **first vertical axis of rotation**, and said first end of said support arm being rotatable in relation to said first coupling about a **first horizontal axis of rotation** a second coupling connecting said second end of said support arm with said conveyor, said second coupling defining a **second vertical axis of rotation** that is not parallel to said conveyor longitudinal axis, and said conveyor being rotatable in relation to said second end of said support arm about said **second vertical axis of rotation** between an unloading position . . . and a loading position . . . .
Claim 22	The seed or grain tender of claim 20, wherein said conveyor is rotatable in relation to said second coupling about a **second horizontal axis of rotation**
Claim 23	The seed or grain tender of claim 22, wherein said **second horizontal axis of rotation** extends through said second coupling
Claim 26	The seed or grain tender of claim 20, wherein said **first vertical axis** extends through said base

‘940 Patent

Claim 1	a first coupling connecting said first end of said support arm with said base, said first coupling being rotatable in relation to said base about a **first vertical axis of rotation,** and said first end of said support arm being rotatable in relation to said first coupling about a **first horizontal axis of rotation**. a second coupling connecting said second end of said support arm with said conveyor at an approximate center of gravity of said conveyor, said second coupling defining a **second vertical axis of rotation** that is not parallel to said conveyor longitudinal axis, and said conveyor being rotatable in relation to said second end of said support arm about said **second vertical axis of rotation** between an unloading position . . . and a loading position . . . .
Claim 2	The seed or grain tender of claim 1, wherein said **first vertical axis of rotation** extends through said main hopper discharge
Claim 3	The seed or grain tender of claim 1, wherein said **second vertical axis of rotation** extends through said approximate center of gravity of said conveyor
Claim 4	The seed or grain tender of claim 1, wherein said **first horizontal axis** extends through said first end of said support arm
Claim 8	a first coupling connecting said first end of said support arm with said base, said first coupling being rotatable about a **first vertical axis of rotation**, and said first end of said support arm being rotatable about a **first horizontal axis of rotation** a second coupling connecting said second end of said support arm with said conveyor at an approximate center of gravity of said conveyor, said second coupling defining a **second vertical axis of rotation** that is not parallel to said conveyor longitudinal axis, and said conveyor being rotatable about said **second vertical axis of rotation** between an unloading position . . . and a loading position . . . .
Claim 10	The seed or grain tender of claim 8, wherein said **second vertical axis of rotation** extends through said approximate center of gravity of said conveyor
Claim 11	The seed or grain tender of claim 8, wherein said **first horizontal axis** extends through said first end of said support arm

Claim 16	a first coupling connecting said first end of said support arm with said base, said first coupling being rotatable about a **first vertical axis of rotation**, and said first end of said support arm being rotatable about a **first horizontal axis of rotation** a second coupling connecting said second end of said support arm with said conveyor at an approximate center or gravity of said conveyor, said second coupling defining a **first conveyor axis of rotation** that is not parallel to said conveyor longitudinal axis, and said conveyor being rotatable about said **first conveyor axis of rotation** between an unloading position . . . and a loading position . . . .
Claim 18	The seed or grain tender of claim 16, wherein said **first conveyor axis of rotation** extends through said approximate center of gravity of said conveyor
Claim 19	The seed or grain tender of claim 16, wherein said **first horizontal axis** extends through said first end of said support arm.

‘123 Patent	
Claim 1	said first end of said support arm being located below said main hopper and being rotatable about a **first axis of rotation**, and said first end of said support arm being rotatable about a **second axis of rotation** that is perpendicular to said first axis of rotation said second end of said support arm being coupled with said conveyor between said first and second ends of said conveyor, said conveyor being rotatable about a **third axis of rotation** at said second end of said support arm that is not parallel to said conveyor longitudinal axis, and said conveyor being rotatable in relation to said second end of said support arm about said **third axis of rotation** between an unloading position . . . and a loading position . . . .
Claim 3	The seed or grain tender of claim 1, wherein said **second axis of rotation** extends through said first end of said support arm
Claim 4	The seed or grain tender of claim 1, wherein said **third axis of rotation** extends through said conveyor
Claim 5	The seed or grain tender of claim 1, wherein said **third axis of rotation** extends through said second end of said support arm
Claim 6	The seed or grain tender of claim 1, wherein said **third axis of rotation** extends through said conveyor and said second end of said support arm.
Claim 7	The seed or grain tender of claim 1, wherein said **third axis of rotation** is oriented at an angle having a vertical component

Claim 10	wherein said support arm is pivotable about a **first axis of rotation** proximate said first end of said support arm to cause said support arm to be movable between an operating position wherein said support arm extends outwardly relative to said main hopper and a storage position wherein said support arm is folded inwardly towards said main hopper in relation to said operating position, said support arm further being pivotable about a **second axis of rotation** proximate said first end of said support arm to cause an elevation of said second end of said support arm to be adjustable said second end of said support arm being coupled with said conveyor between said first and second conveyor ends, said conveyor being rotatable about a **third axis of rotation** proximate said second end of said support arm that is not parallel to said conveyor longitudinal axis, and said conveyor being rotatable in relation to said second end of said support arm about said **third of axis of rotation** between an unloading position . . . and a loading position . . . .
Claim 12	The seed or grain tender of claim 10, wherein said **second axis of rotation** extends through said first end of said support arm.
Claim 13	The seed or grain tender of claim 10, wherein said **third axis of rotation** extends through said conveyor.
Claim 14	The seed or grain tender of claim 10, wherein said **third axis of rotation** extends through said second end of said support arm.
Claim 15	The seed or grain tender of claim 10, wherein said **third axis of rotation** extends through said conveyor and said second end of said support arm
Claim 16	The seed or grain tender of claim 10, wherein said **third axis of rotation** is oriented at an angle having a vertical component.
Claim 17	The seed or grain tender of claim 16, wherein said **first axis of rotation** is vertical.
Claim 18	The seed or grain tender of claim 17, wherein said **second axis of rotation** is horizontal.

The specification provides:

The conveyor 104 is pivotably coupled with the support arm by a coupling 103 at a point that is preferably near or at the center of gravity of the conveyor 104. The conveyor 104 is also coupled to the support arm 102 by a latch (not shown) at the bottom of the conveyor. The latch allows the conveyor 104 to be uncoupled from the support arm 102 at the bottom so that the conveyor is free to rotate about the coupling 103. By positioning the coupling 103 at or near the center or gravity of the conveyor 104, the

> conveyor 104 balances on the pivoting coupling 103 such that little effort is required to rotate the conveyor.
>
> . . . .
>
> FIG. 3 illustrates the seed carrier 100 in the loading position. As shown, the conveyor 104 is uncoupled from the support arm 102 at its base and rotated 180 degrees about pivot coupling 103 so that the conveyor hopper 108 is positioned at a convenient location away from the carrier while the discharge 112 of the conveyor 104 is located over the main hopper.

Doc. Nos. 36-3 at 16 and 36-4 at 16.

Meridian argues these are new claim terms and that the axes of rotation terms were used interchangeably during prosecution with the terms from the '047 patent. Unverferth asserts that Meridian's proposed constructions (the terms from the '047 patent) were cancelled or removed from the claims during prosecution and replaced with the axes of rotation terms. *See* Doc. No. 40-7 at 4 (noting that claim 56 reciting the limitation "said second vertical axis of rotation" was rejected because there was an insufficient antecedent basis for this limitation in the claim); Doc. No. 40-9 at 8 (proposing that "second vertical axis of rotation" be changed to "first conveyor axis of rotation"). It argues that parent claim language cannot be imported to child claims.

I find that the axes of rotation terms need not be construed and should be given their ordinary and customary meaning. A patentee may file a continuation application with different claims and "different claim terms are presumed to have different meanings." *See Helmsderfer v. Bobrick Washroom Equip., Inc.*, 527 F.3d 1379, 1382 (Fed. Cir. 2008); *see also ResQNet.com, Inc. v. Lansa, Inc.*, 346 F.3d 1374, 1383 (Fed. Cir. 2003) ("Although a parent patent's prosecution history may inform the claim construction of its descendant . . . prosecution history is irrelevant to the meaning of [a] limitation [if] the two patents do not share the same claim language."); *Invitrogen Corp. v. Clontech Labs., Inc.*, 429 F.3d 1052, 1078 (Fed. Cir. 2005) ("[T]he prosecution of one claim term in a parent application will generally not limit different claim language in a continuation application."). The '940 and '123 patents sufficiently describe the axes of rotation for each axis of rotation, such that it is unnecessary to construe the terms as

proposed by Meridian to include the vertical and horizontal modifiers. All three patents describe the same movements with respect to each axis of rotation such that the axes of rotation terms in the '940 and '123 patents do not introduce new matter.

With regard to whether the terms are used interchangeably, the prosecution history reveals that the terms from the '047 patent (and Meridian's proposed constructions) were cancelled or removed from the claims during prosecution. The explanation of why those terms were dropped is limited. The prosecution history reveals only that in prosecuting the '553 application (what would become the '940 patent), the Examiner rejected claim 56 for reciting the term "second vertical axis of rotation" because the claim depended from a claim (claim 54) that did not include this term and instead used the term "first conveyor axis of rotation." *See* Doc. Nos. 40-7 and 40-8. Unverferth argues this is evidence that the terms were not used interchangeably.[7] The patentee responded to the Examiner's rejection by replacing "second vertical axis of rotation" with "first conveyor axis of rotation." *See* Doc. No. 40-9. The patentee then submitted amendments to claims in a separate application that led to the '123 patent. *See* Doc. Nos. 40-10 and 40-11. Because the previous terms from the '047 patent were cancelled or removed during prosecution of the '940 and '123 patents, I find it would be improper to construe the axes of rotation terms using the '047 claim terms. While the axes of rotation terms may have replaced similar terms from the '047 patent, this does not demonstrate that the terms, or their constructions, are interchangeable.

Finally, Meridian notes the specification of the '940 and '123 patents do not use the axes of rotation terms. There is no requirement that claim terms be used in the specification. The purpose of the specification is to explain the patent's scope and

[7] Meridian cites *Amhil Enters. Ltd. v. Wawa, Inc.*, 81 F.3d 1554, 1559-62 (Fed. Cir. 1996), to argue that when two terms are used interchangeably in describing the same feature, the court must construe the terms the same. Notably, the terms used interchangeably in *Amhil* were within the same patent. Meridian has not cited case law in which terms were used interchangeably between patents and a claim term from one patent was used to construe a claim term from a continuation patent.

meaning. *See Phillips*, 415 F.3d at 1318; *see also* 35 U.S.C. § 112 (stating that the specification "shall contain a written description of the invention, and of the manner and process of making and using it, in such full, clear, concise, and exact terms as to enable any person skilled in the art to which it pertains . . . to make and use the same."). It is easy to understand what the axes of rotation terms mean within the context of the claim language. The claim language clearly describes what is being rotated around the relevant axis and for what purpose. Indeed, I find that providing a construction would likely result in confusion. No construction is necessary for the axes of rotation claims.

B. Meridian '551 Patent

1. "Lock Bars on the Bed" and "Pivotally Connected"

Lock Bars on the Bed	
Unverferth's Proposed Construction	**Meridian's Proposed Construction**
Lock bars attached to the bed	Lock bars attached to or near the bed

Pivotally Connected	
Unverferth's Proposed Construction	**Meridian's Proposed Construction**
Pivotally attached to	Rotatable

Lock bars on the bed and pivotally connected are found in claim 12 of the '551 patent. Lock bars are also mentioned in claims 13 and 14 of the '551 patent:

Claim 12	An improved trailer for transporting a bulk seed box, the box having first and second sidewalls, a bottom, a top, and a flange extending along the sidewalls adjacent the bottom of the box, the trailer comprising . . . **lock bars on the bed** to overlappingly engage the flange on the seed box to secure the seed box to the bed; and each lock bar being **pivotally connected** to the bed for movement between an unlocked position spaced outwardly from the perimeter edge of the bed and a locked position spaced inwardly from the perimeter edge of the bed.
Claim 13	The improved trailer of claim 12 further comprising pins on the bed adapted to selectively engage a portion of the **lock bars** to maintain the **lock bars** in the locked positions.

Claim 14	The improved trailer of claim 12 wherein the bed has a front end, a back end, and opposite sides, and the **lock bars** extend between opposite sides adjacent the front and back ends.

Doc. No. 37-27 at 9. The specification for the '551 patent states: "The bed 14 of the trailer 10 is provided with a plurality of upwardly and outwardly extending guide plates 22 that facilitate loading of the box 18 onto the bed 14." *Id.* at 7. It also describes: "The trailer 10 includes a locking system for securing the seed box to the bed 14. The lock system is associated with the guide plates 22." *Id.* at 8. After the *Markman* hearing, the parties submitted a joint statement (Doc. No. 45) relating to the term "bed." They agree that the term "bed" in the '551 patent may include guide plates.

In another case involving the '551 patent, I construed "lock bars on the bed" in claim 3 to mean "lock bars attached to or near the bed." *See Meridian v. C&B Mfg., Inc.*, No. 15-4238-LTS, 2017 WL 2525274, at *22 (N.D. Iowa June 9, 2017). Unverferth attempts to distinguish this by noting that claim 12 identifies not only "lock bars on the bed" but that "each lock bar" is "pivotally connected to the bed." In contrast, claim 3 provides only: "The improved trailer of claim 1 further comprising lock bars on the bed to overlappingly engage the flange of the seed box to secure the seed box to the bed." Unverferth argues that the word "connected" reflects that the lock bar must be attached to the bed, not merely near it. *See* Doc. No. 36-10 (noting "connected" is defined as "joined or linked together" in Merriam-Webster's Collegiate Dictionary, Tenth Ed.). Unverferth also cites the specification, noting that in describing the relationship between the lock bars and the bed, the specification states both "lock bars on the bed" and "attached to the bed." *See* Doc. No. 37-27 at 7 ("Another objective of the present invention is the provision of an improved trailer for transporting bulk seed boxes having lock bars on the bed to secure the box to the bed."); *Id.* ("Lock bars are pivotally attached to the bed"). Unverferth argues the figures show that the lock bars are attached to guide plates and the guide plates are considered to be part of the bed.

Meridian disagrees, stating Figure 2 of the specification shows that in the locked position, the lock bars 36 may be attached to the guide plate 24B and situated above the bed 14, while Figure 3 shows that in the unlocked position, the lock bars 36 are adjacent to the bed. *See* Doc. No. 39 at 21. Meridian states that in both figures, the lock bars need not be attached directly to the flat portion of the bed, but rather attached to the bed through an intermediary. Figures 2 and 3 are depicted below with Figure 2 depicting the locked position and Figure 3 depicting the unlocked position:

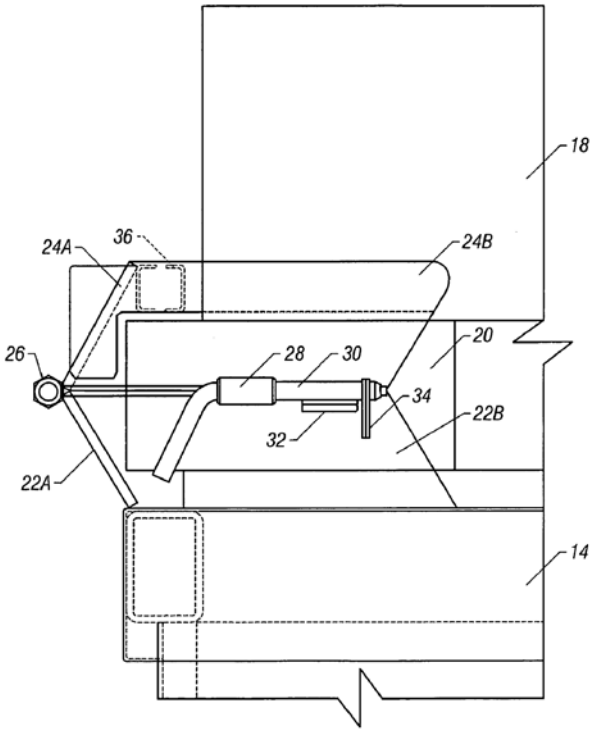

FIG. 2

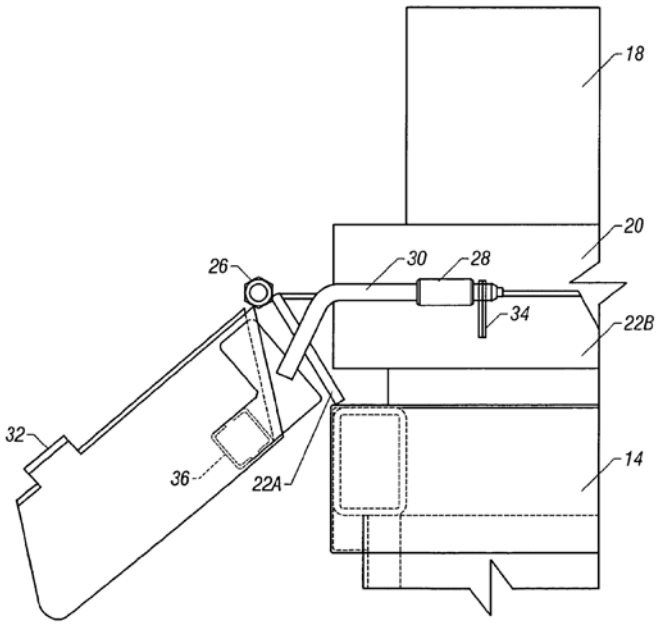

FIG. 3

The specification describes that the lock bars have clamps on each end. Doc. No. 37-27 at 8. Meridian points out that Figure 3 shows that when the locking pin is in a retracted position, the lock bars can be rotated between an unlocked position (Figure 3) and a locked position (Figure 2). Meridian argues Unverferth's proposed construction for pivotally connected is redundant, using the claim term itself to define the claim term, and is unnecessarily confusing. It also notes that Unverferth's proposed construction excludes the option for indirect attachment, which contradicts the embodiments of the '551 patent as shown in Figures 2 and 3.

The summary of the invention in the '551 patent states that the "[l]ock bars are pivotally attached to the bed and extend across the front and back of the box to engage a lower flange on the box and thereby secure the box to the bed. The lock bars are secured in the locked position quickly and easily with a locking pin." Doc. No. 37-27 at 7. The specification describes the "lock system" as follows:

> The trailer 10 includes a locking system for securing the seed box 18 to the bed 14. The lock system is associated with the guide plates 22.

> More particularly, as best seen in FIGS. 2 and 3, the lock system includes a corner clamp 24 connected to each corner guide plate 22 with a hinge 26. Each corner guide plate 22 includes left and right sections 22A, 22B, extending at right angles to one another. Similarly, each corner clamp 24 includes left and right sections 24A, 24B extending at right angles to one another. As seen in FIGS. 2 and 3, the left corner clamp section 24A is connected to the left guide plate section 22A by the hinge 26. The hinge 26 allows the corner clamp 24 to move between a closed or locking position shown in FIG. 2 to an open or unlocked position shown in FIG. 3. The right guide plate section 22B includes a collar 28 through which a locking pin 30 slidably and rotatably extends. The right corner clamp section 24B includes a lip 32. With the locking pin 30 in a retracted position, as shown in FIG. 3, the corner clamp 24 can be pivoted from the unlocked position (FIG. 3) to the locked position (FIG. 2). Then, the locking pin 30 can be rotated 90° such that the cotter or roll pin 34 will move past the lip 32, such that the locking pin will extend over the lip so as to maintain the corner clamp 24 in the locked position. The cotter or roll pin 34 and locking pin 30 are then rotated 90° whereby the cotter pin 34 prevents the locking pin 30 from being fully retracted past the lip 32. To move the corner clamp 20 from the locked position of FIG. 2 to the unlocked position of FIG. 3, the locking pin 30 is rotated 90° such that the cotter or roll pin 34 can move past the lip 32 and the locking pin 30 retracted from the collar 28.
>
> Extending between the corner clamps 24 on the front and back of the bed 14 is a lock bar 36. Thus, the front corner clamps 24 are tied together by the lock bar 36, as are the back corner clamps. When the corner clamps 24 are pivoted to the locked position, the lock bar 36 extends over the perimeter flange of the seed box 18, as seen in FIG. 2, so as to secure the box to the bed 14. The lock bar 36 includes a drop down section 37 which provides access and clearance for the discharge gate (not shown) of the seed box.

Id. at 8. I find that "lock bars on the bed" should be construed as "lock bars attached to or near the bed." The specification provides that the lock system is "associated" with the guide plates and that the bars engage with the seed box to secure the box to the bed. While the parties agree that the bed may include guide plates, the specification also provides that the lock system includes a corner clamp connected to each corner guide plate with a hinge and that the corner clamps are tied together by the lock bar. I find that

construing lock bars on the bed as "lock bars attached to the bed" is too limiting due to the way the lock bars are described in association with the bed and the way that bed is used throughout the specification. It is not clear from the specification whether "bed" includes any other components beyond guide plates.

Moreover, "pivotally connected" suggests a looser association between the lock bars and the bed, as do Figures 2 and 3. I do find, however, that "pivotally connected" should be construed as "pivotally attached to" as that describes the appropriate association between the lock bars and the bed, suggesting movement, but only in relation to a connection/attachment. I do not find support for Meridian's proposed construction of "rotatable" in the intrinsic evidence. It appears the purpose of "pivotally connected" in the specification and claims is to emphasize the connection rather than the function – to describe how the lock bars move in relation to the bed. *See* claim 12 ("each lock bar being pivotally connected to the bed for movement between an unlocked position spaced outwardly from the perimeter edge of the bed and a locked position spaced inwardly from the perimeter edge of the bed."). This construction is also supported by the Brief Summary of the Invention, which states that the "[l]ock bars are pivotally attached to the bed." For these reasons, lock bars on the bed will be construed as "lock bars attached to or near the bed" and pivotally connected will be construed as "pivotally attached to."

2. Pins on the Bed

Unverferth's Proposed Construction	Meridian's Proposed Construction
Pins attached to the bed	Pins that are operatively connected to the bed

Pins on the bed is used in claim 13 stating: "The improved trailer of claim 12 further comprising pins on the bed adapted to selectively engage a portion of the lock bars to maintain the lock bars in the locked positions." Doc. No. 37-27 at 9. Similar to lock bars, pins on the bed are part of the lock system (as described in the specification

above) and associated with the guide plates. As discussed above, the scope of "bed" is unclear and the parties have agreed only that it "may" include guide plates. The pins are used to secure the lock bars and, as the figures and specification demonstrate, the guide plates include a collar through which a locking pin slidably and rotatably extends. *See id.* at 8. I do not find that "on" requires a direct attachment as Unverferth argues. Similar to the lock bars, I find that pins on the bed should be construed as "pins that are operatively connected to the bed."

3. Operatively Connected

Unverferth's Proposed Construction	Meridian's Proposed Construction
Attached to, for performing a function	Connected, even if not directly

The term "operatively connected" is found in claim 12 of the '551 patent. It states that the improved trailer is comprised of "a conveyor operatively connected to the hopper for unloading seed from the hopper." *Id.* at 9. The summary of the invention also states that the trailer includes a "conveyor operatively connected to the hopper for unloading seed." *Id.* at 7. Meridian does not dispute that "operatively connected" inherently results in two or more components working together to perform a function but disagrees that an operative connection requires the parts to be directly attached. I agree that "operatively connected" suggest a broader connection than direct attachment. Here, the conveyor and hopper must work together to unload seed. I do not find anything in the intrinsic evidence requiring a physical or direct attachment between these components in order to perform that function. Operatively connected will be construed as "connected, even if not directly."

4. Extends Laterally Away From the First Sidewall

Unverferth's Proposed Construction	Meridian's Proposed Construction

Originating at and projecting from the first sidewall	Extends from the side of the first sidewall

"Extends laterally away from the first sidewall" is found in claim 18 of the '551 patent stating:

> The improved trailer of claim 12 wherein the conveyor extends laterally away from the first sidewall, and the hopper includes a gate moveable between a closed position for retaining seed in the hopper and an open position for discharging seed from the hopper, and having a control arm connected to the gate and extending toward the first sidewall adjacent the conveyor.

Doc. No. 37-27 at 9. The specification provides that the conveyor "is preferably an auger." It also states:

> The hopper includes a gate moveable between a closed position for retaining seed in the hopper and an open position for discharging seed from the hopper. A control arm is connected at one end to the gate, and has an opposite end extending upwardly and outwardly to a location adjacent the conveyor, such that an operator can manually move the gate between the open and closed positions. The outer end of the control arm extends slidably through a support guide mounted on the side of the trailer.

Id. at 7. Even more specifically, it provides: "The control arm 50 includes a lower end connected to the slide gate 42, an upper end 54 extending to a position near the sidewall of the trailer 10." *Id.* at 8.

Meridian argues it is clear from the specification and figures that the conveyor/auger need not originate at the first sidewall but only that it extends away from the first sidewall. It notes that Unverferth's proposed construction would exclude the preferred embodiment because Figure 1 and the specification make clear that the auger/conveyor originates below the hopper rather than from the first sidewall. Unverferth contends that the words "extends" "from" are used to designate origin such that the conveyor originates at the sidewall of the hopper.

Unverferth's proposed construction reads in a point-of-origin limitation that is not supported by the intrinsic evidence, including the figures and the claim language itself. The fact that the conveyor is "operatively connected" to the hopper says nothing about where on the hopper it is connected. The phrase "extends laterally away from the first sidewall," without more, merely describes the direction of the conveyor in relation to the sidewall. For these reasons, I find that the phrase "extends laterally away from the first sidewall" should be construed as "extends from the side of the first sidewall."

C. Meridian '065 Patent

1. "A First Set of Cleats" and "A Second Set of Cleats"

Unverferth's Proposed Construction	Meridian's Proposed Construction
A first/second distinct group of cleats	A first/second grouping of cleats

These terms appear in claim 1 of the '065 patent, which provides:

> An improved conveyor belt for use in a tubular conveyor, comprising . . .
> a first set of cleats on the belt extending across the longitudinal axis at a non-perpendicular angle from left to right;
> a second set of cleats on the belt extending across the longitudinal axis at a non-perpendicular angle from right to left.

Doc. No. 37-28 at 10. The specification also provides, in the Background of the Invention:

- "Still another objective of the present invention is the provision of a cross cleated conveyor belt with multiple sets of cleats, with each set including a plurality of spaced cleat members." Col. 1, ll. 38-41.

- "Yet another objective of the present invention is a conveyor belt having a plurality of sets of cleats, with each set crossing the longitudinal axis of the belt at a non-perpendicular angle." Col. 1, ll. 47-49.

Id. at 9. The Detailed Description of the Preferred Embodiments states:

> The belt 24 also has a plurality of cleat sets 28 on the outer surface of the belt and which are staggered along the full length of the belt 24.

> Each of the cleat sets 28 has a longitudinal axis which is non-perpendicular to the belt axis 26. In a preferred embodiment, the cleat sets 28 are set at the angle of approximately 35° relative to the opposite edges of the belt. The longitudinal axis of the cleat sets 28 can be varied without departing from the scope of the invention.
>
> Adjacent cleat sets 28 are angularly offset with respect to one another, such that the axis of one cleat set is non-parallel to the axis of an adjacent cleat set. Each cleat set 28 has forward and rearward ends, and each cleat set 28 crosses the belt axis in a non-perpendicular angle. Thus, the front end of one cleat set is on the same side of the belt axis 26 as the rear end of an adjacent cleat set. The front end of each cleat set is defined as the end closest to the outlet pulley 22, while the rear end of each cleat set is defined as the end closest to the inlet pulley 20.
>
> Each cleat set includes a plurality of upstanding cleat members 30. Each cleat member 30 may be independently secured to the outer surface of the belt 24, or alternatively, the cleat members 30 in each cleat set 28 can be interconnected with a base 32 which in turn is mounted on the outer surface of the belt 24. The mounting of the cleat sets 28 and cleat members 30 on the belt 24 is by any convenient means. The cleat members 30 in each cleat set 28 are spaced apart and have parallel longitudinal axes. As seen in FIG. 9, the longitudinal axis of the individual cleat members 30 is offset with respect to the longitudinal axis of the cleat sets 28. In a preferred embodiment, the cleat members are oriented at approximately 55° relative to a side edge of the belt 24. It is understood that this angle may be varied without departing from the scope of the invention. The dimensions of the cleat members 30 may be the same or different from one another, and may vary depending on the width of the belt 24. Also, the spacing between the cleat members 30 may be equal or non-equal.

Id. at 9-10. The Abstract provides:

> An improved conveyor belt is provided for use in a tubular conveyor. The belt includes a plurality of cleat sets extending at a non-perpendicular angle across the axis of the belt. Adjacent cleat sets are offset with respect to one another, such that the axis of adjacent cleat sets are non-parallel. Each cleat set includes a plurality of spaced apart, upstanding cleat members. The orientation of the cleat sets helps maintain material toward the center of the belt, while the orientation of the cleat members eliminates vacuum behind the cleat members.

Id. at 1. The cleat sets are shown in the following figures:

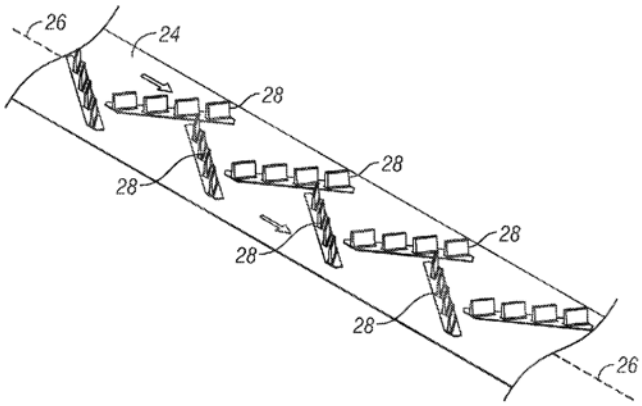

FIG. 6

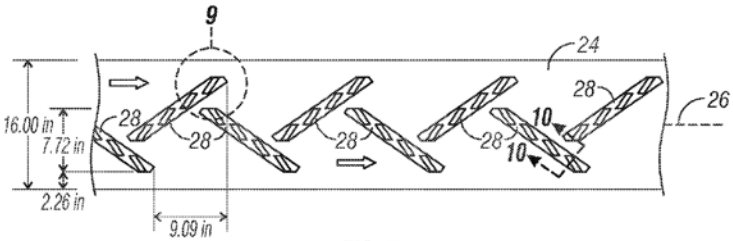

FIG. 7

Id. at 7. Meridian argues that nothing in the claim language or intrinsic evidence limits the first and second set of cleats to a "distinct" group of cleats and that Unverferth's proposed construction reads limitations into the claims that improperly restrict the claim terms to the preferred embodiment shown in the figures. Unverferth argues that Meridian's proposed construction is incorrect because it is inconsistent with the ordinary meaning of the claim language, renders surrounding claim language superfluous and effectively reads out claim limitations from the claims.

I agree with Unverferth that "a first set of cleats" and "a second set of cleats" should be construed as "a first distinct group of cleats" and "a second distinct group of cleats." To allow overlap between the two groupings would defeat the purpose of distinguishing between a first set and a second set. *See Becton, Dickinson & Co. v. Tyco Healthcare Grp.*, 616 F.3d 1249, 1254 (Fed. Cir. 2010) ("Where a claim lists elements separately, the clear implication of the claim language is that those elements are distinct components of the patented invention.") (internal quotations omitted). Construing the

sets to be "distinct" does not necessarily limit the invention to the preferred embodiment but it is consistent with the claim language in describing two separate sets. Nothing in the specification suggests that the first set and second set could be grouped in such a way that they would have cleat members in common, as Meridian's proposed construction would allow. Indeed, the specification refers to the components of each set and their relation to one another, never suggesting that the sets are anything other than separate and distinct. To conclude that a set is merely comprised of a "plurality" of cleat members ignores the distinctions between the two separate sets as set forth in the claims and specification. For these reasons, I find that "a first set of cleats" and "a second set of cleats" should be construed as "a first distinct group of cleats" and "a second distinct group of cleats."

V. CONCLUSION

For the reasons set forth herein, the court's final constructions of the disputed terms and phrases are set out below:

Term/Phrase	Court's Construction
Base	Ordinary and customary meaning, no construction necessary
Vertical	Generally upright
Horizontal	Generally side-to-side
Parallel	Side-by-side separated by generally the same distance
Below	Under
Locking mechanism	Ordinary and customary meaning, no construction necessary
First conveyor axis of rotation	Ordinary and customary meaning, no construction necessary
First axis of rotation	Ordinary and customary meaning, no construction necessary
Second axis of rotation	Ordinary and customary meaning, no construction necessary

Third axis of rotation	Ordinary and customary meaning, no construction necessary
Lock bars on the bed	Lock bars attached to or near the bed
Pivotally connected	Pivotally attached to
Pins on the bed	Pins that are operatively connected to the bed
Operatively connected	Connected, even if not directly
Extends laterally away from the first sidewall	Extends from the side of the first sidewall
A first set of cleats and a second set of cleats	A first distinct group of cleats and a second distinct group of cleats

IT IS SO ORDERED.

DATED this 20th day of April, 2020.

Leonard T. Strand, Chief Judge