MORRIS

Advanced Air Seeding and Tillage Systems

OPERATOR'S Manual

7000 Series

AIR CART

N27800-10

Table of Contents

Section 1:
Safety 1-1
Signal Words 1-2
General Operation 1-3
Tractor Operation 1-3
Chemicals 1-4
Transporting 1-5
Hydraulics 1-5
Maintenance 1-6
Storage 1-6
Safety Signs 1-7
Tow Behind 1-7
Auger 1-8
Tow Behind Rear 1-8
Tow Between 1-9
Lighting and Marking 1-10

Section 2:
Specifications 2-1
7130 & 7180 Models 2-2
7130 & 7180 - 2/3 Meter 2-3
7180 Liquid Tank Models 2-4
7240 Models 2-5
7252 Models 2-6
7300 Models 2-7

Section 3:
Checklist 3-1
Manuals 3-2
Parts Manual 3-2
Assembly Manual 3-2
Checklist 3-3

Section 4:
Introduction 4-1
Introduction 4-2
Options 4-3
Acre Tally 4-3
Second Clutch 4-3
Hydraulic Auger 4-4
Right Hand Side Ladder 4-4
Auger Spout Extension Kit #N23188 4-4
Large Fan Screen 4-4
Mounted Packers 4-5
Mounted Harrow Kit 4-5
Granular Applicator 4-5
Third Tank 4-5
Double Shoot Distribution 4-6
Hitch Stand Kit (Tow Behind) 4-6
Flow Sensors 4-7
Pin Sensor System 4-7
Optical Sensor System 4-7
Rear Tow Hitch 4-7
Fertilizer Banding Kit 4-8
Banding Kit (using rear transmission) 4-8
Banding Kit (using front transmission) 4-8

Table of Contents

Seed Boots 4-9
Collector Plug 4-9

Section 5:
Operation 5-1
Application 5-4
Tractor 5-4
Tires 5-4
Hydraulics 5-4
Drawbar 5-4
Hitching 5-5
Hitching to Tractor (Seeding Tool or Tow Between Cart) 5-5
Hitching to Seeding Tool (Tow Between Cart) 5-6
Hitching Tool Bar (Three Point Hitch) 5-6
Hitching Xpress Air Drill 5-7
Hitching to Seeding Tool (Tow Behind Cart) 5-8
Hydraulic Connections 5-10
Unhitching from Tractor (Seeding Tool or Tow Between Cart) 5-11
Unhitching from Seeding Tool (Tow Between Cart) 5-11
Unhitching from Seeding Tool (Tow Behind Cart) 5-12
Unhitching from Tool Bar (Tow Between Cart) 5-13
Unhitching Xpress Air Drill from Air Cart 5-14
Unhitching Xpress Air Drill Cart from Tractor 5-15
Unhitching Xpress Air Drill Combination from Tractor 5-15
Three Point Hitch 5-16
Rephasing 5-16
Transport 5-17
Speed 5-17
Lights 5-17
Tow Hitch (Tow Behind Units) 5-17
Disconnect Main Drive Chain: 5-18
Installation of Main Drive Chain 5-18
Metering System 5-19
Secondary Hose Installation 5-20
Slider Setting 5-21
Filling Tank 5-23
Unloading Tanks 5-27
Complete Clean-out 5-27
Metering Rate Adjustment 5-28
Acre Tally 5-28
Rate Charts 5-29
Spacing Sprocket 5-29
Determining Spacing Sprocket 5-29
Tire Size Sprocket 5-30
Determining Tire Sprocket 5-30
Rate Chart Use 5-31
Extra Low Rates 5-32
Extra High Rates 5-32
Fertilizer Rate Chart: (Rear Transmission) 5-33
Soybeans Rate Chart: (Rear Transmission) 5-34
Seed Rate Chart: (Front Transmission) 5-35
Sunflowers Rate Chart: (Front Transmission) 5-36
Slow Speed Seed Rate Chart: (Front Transmission) 5-37
Fertilizer Rate Chart: (Located on Front Tank of 7252 Only) 5-38

Rate Calibration 5-39
Alternative Rate Calibration 5-40
Imperial Rate Calibration Chart 5-41
7130 and 7180 5-41
7180, 7240, 7252 and 7300 5-42
Seeding Fine Seeds (Canola, Mustard, etc.) 5-43
Applying Inoculant 5-43
Fan Speed Setting 5-44
Hydraulic Fan Drive 5-44
Engine Driven Fan 5-44
Fan Speed 5-45
Double Shoot Settings 5-46
Plenum Damper Settings 5-46
Diverter Settings 5-46
Quick Coupler (Tow Behind Only) 5-46
Double Shoot Tow Behind 5-47
Single Shoot Tow Behind 5-47
Double Shoot Tow Between 5-48
Single Shoot Tow Between 5-48
Fertilizer Banding Kit 5-49
Using Rear Transmission 5-49
Using Front Transmission 5-49
Operating Engine 5-50
Before Starting Engine 5-50
Starting engine 5-50
Hydraulic Fan Drive 5-51
Operating Guidelines 5-52
Check Tire Pressures 5-52
Level Seeding Tool Side to Side 5-52
Level Seeding Tool Front to Rear 5-52
Worn Seeding Tool Parts 5-52
Packing 5-52
Turning 5-53
Seed Rate Settings 5-53
Fertilizer Application 5-53
Fan Setting 5-53
Product Application 5-53
Adjustments and Operational Checks 5-54
Checking Seed Flow 5-54
Moisture Alert 5-54
Air Leaks 5-54
Tank Low in Product 5-54
Monitor 5-55
Opener Adjustments - Double Shoot Boots 5-55
General Field Operation 5-57
Clutch Switches 5-57
Main 5-57
Auxiliary 5-57
Granular 5-57

Section 6:
Monitor 6-1
Introduction 6-3
Identifying Monitor Version 6-4
Identifying Monitor Switches 6-6

Table of Contents

Identifying Monitor Displays 6-6
Lower Display 6-6
Bin Level Indicator 6-6
Preparing Monitor 6-7
Start-up 6-8
Normal Start-up 6-8
Special Start-up 6-8
Start-up Error Messages 6-9
First Class 6-9
Second Class 6-9
System Installation 6-10
Sensor LEARN Mode 6-10
Installation Precautions 6-10
Installation Procedure 6-11
Monitor Programming 6-12
Procedure 6-12
Entering Change Settings Mode 6-12
Exiting from Change Settings Mode 6-12
Canola Setting 6-13
PPM Math Calculation for Version 1 6-15
Pulse Counting Mode for PPM Version 1 6-15
PP400 Math Calculation for Version 2 6-16
Pulse Counting Mode for PP 400 Version 2 6-16
Normal Operation 6-17
Alarms 6-18
Introduction 6-18
Sensor Alarm Chart 6-19
Bin Level Alarms 6-19
Low Fan Alarms 6-20
Ground Drive (“In Motion”) Alarm 6-20
Regular Blockage Module Alarms - Pin Sensors 6-21
Optical Blockage Module Alarms 6-22
Communication Alarms 6-23
System Error Alarms 6-23
Area Display 6-24
Resetting the Field Acre Meter 6-24
Resetting the Total Acre Meter 6-24
Application Rate Check 6-25
Flow - Pin Sensors 6-27
Introduction 6-27
Test Mode 6-28
Calibration Mode 6-29
Operation Mode 6-30
Flow - Optical Sensors 6-31
Introduction 6-31
Optical Blockage Module Setup 6-31
Flow Function 6-32
Flow Test 6-32
Flow Calibration 6-33
Sensor Replacement 6-34
Sensor Gap Settings 6-34
Reed Switch Sensors 6-34
Variable Reluctance Sensors 6-34
Trouble Shooting Guides 6-35

Checking Harness 6-35
Checking Sensors 6-35
Checking Blockage Modules 6-35

Section 7:
Maintenance 7-1
General 7-3
Safety 7-3
Tighten Bolts 7-4
Tires 7-4
Daily Maintenance 7-5
Lubrication 7-6
1. Drive shaft bearings 7-6
2. Drive Chains 7-6
3. Slow Speed Drive 7-6
4. Front Castor Wheel bearings 7-7
5. Castor Fork Pivot (7130 and 7180 only) 7-7
6. Auger pivots 7-7
Air Delivery System 7-8
General 7-8
Tank Lids 7-9
Tank Lid Adjustment 7-9
Air Leak Check 7-10
Fan 7-11
Fan Screen 7-11
Fan Impeller 7-11
Storage 7-11
Impeller Clearance 7-12
Hoses 7-12
Hydraulic Orbit Motor 7-13
Repair/Replacement 7-13
Clutch 7-13
Engine Maintenance 7-14
Daily Maintenance 7-14
Weekly Maintenance 7-14
Air Cleaner Maintenance 7-15
Fan Drive Belt Maintenance 7-15
General Engine Maintenance 7-15
Hydraulics 7-16
Wheel Bearings 7-17
Front Castor Brake Adjustment 7-18
Metering 7-19
Metering Wheel Replacement 7-19
Standard Metering Body 7-20
Coated Metering Body 7-21
Auger Arm Lock 7-24
Auger Pre-Load Adjustment 7-24
2-3 Meter Cart 7-25
Castor Fork Adjustment 7-25

Section 8:
Storage 8-1
Preparing for Storage 8-2
General 8-2
Preparing for Storage - continued 8-3

Table of Contents

Metering Body Storage 8-3
Preparing for Storage - continued 8-4
Engine Storage: 8-4
Removing From Storage 8-5
General 8-5
Monitor 8-5
Clutch 8-5
Auger 8-5

Section 9:
Troubleshooting 9-1
General 9-2
Delivery hoses plugged. 9-2
Hydraulic fan will not turn 9-2
Fan turning too slow 9-2
Front Castor moving too freely. (7240, 7252 & 7300) 9-2
Front Castor moving too freely. (7240, 7252 & 7300) 9-3
Material flowing thru system when unit is stationary and the fan running. 9-3
Material not being divided in distribution head. 9-3
Material not being metered out. 9-3
Plugged seed boots 9-4
Material not being accurately metered out of the metering body. 9-4
Material not being accurately metered out of the metering body. 9-5
2-3 Meter Cart 9-5
Castor Axles have excessive movement. 9-5
Not tracking straight. 9-5
Monitor 9-6
Monitor lights up but does not seem to work. 9-6
No fan display. 9-6
No ground speed display 9-6
No meter speed display. 9-6
No display, no back light. 9-6
No display, no back light. 9-6
Bin indicates always empty. 9-6
Bin indicates always full. 9-7
Blown fuse. 9-7
Engine 9-7
Engine stops or lacks power. 9-7
Engine will not start or is hard to start. 9-7
Engine knocks or pings, skips, backfires, misfires or overheats. 9-7
High fuel consumption. 9-7

Section 10:
Options Assembly 9-1
Hitch Stand Kit (Tow Behind) 9-3
Second Clutch 9-4
Acre Tally 9-4
Mounted Harrow Kit 9-5
Mud Scraper 9-5
7130 & 7180 Tow Behind 9-5
Fertilizer Banding Kit 9-6
Banding Kit (using rear transmission) 9-6
Banding Kit (using front transmission) 9-7
Rear Tow Hitch (Tow Behind) 9-8
Standard Hitch 9-8

Rear Tow Hitch (Tow Behind) 9-9
Extended Hitch 9-9
Rear Tow Hitch (Tow Behind) 9-10
Hitch Extention (Tow Between) 9-11
Three Point Hitch 9-12
Three Point Hitch - continued 9-14
Standard Hydraulics 9-14
Xpress Tow Between Hydraulic Drive 9-16
Auger Spout Extension Kit 9-18
Pin Blockage System 9-19
Option 'A' - Full System 9-19
Option 'B' - Partial System 9-20
Option 'B' - One Sensor per Head - Secondary Hoses 9-21
Option 'B' - Two Sensors per Head - Secondary Hoses 9-22
Option 'B' - Three Sensors per Head - Secondary Hoses 9-23
Option 'B' - Four Sensors per Head - Secondary Hoses 9-24
Installation Procedure 9-25
Wiring Procedure 9-26
Optical Blockage System 9-29
Option 'A' - Full System 9-29
Option 'B' - Partial System 9-29
Option 'B' - One Sensor per Head - Secondary Hoses 9-30
Option 'B' - Two Sensor per Head - Secondary Hoses 9-31
Option 'B' - Three Sensor per Head - Secondary Hoses 9-32
Option 'B' - Four Sensor per Head - Secondary Hoses 9-33
Installation Procedure 9-34

Section 11:
Metric 11-1
Metric Rate Calibration Chart 11-2
Model 7130 & 7180 11-2
Model 7180, 7240, 7252 & 7300 11-3
Rate Charts 11-4
Seed Rate Chart: (Front Transmission) 11-4
Slow Speed Seed Rate Chart: (Front Transmission) 11-5
Fertilizer Rate Chart: (Rear Transmission) 11-6
Fertilizer Rate Chart: (Located on Front Tank of 7252 Only) 11-7

Section 12:
Fertilizer Banding Kit 12-1
Fertilizer Banding Kit 12-2
Using Rear Transmission 12-2
Using Front Transmission 12-2
Metric Rate Charts 12-3
Slow Speed: (Front Transmission) Small Seeds 12-3
Slow Speed: (Front Transmission) Regular Seeds 12-4
Slow Speed: (Front Transmission) Fertilizer 12-5
Imperial Rate Charts 12-6
Slow Speed: (Front Transmission) Small Seeds 12-6
Slow Speed: (Front Transmission) Regular Seeds 12-7
Slow Speed: (Front Transmission) Fertilizer 12-8

Notes

Section 1: Safety

Section Contents

Signal Words 1-2
General Operation 1-3
Tractor Operation 1-3
Chemicals 1-4
Transporting 1-5
Hydraulics 1-5
Maintenance 1-6
Storage 1-6
Safety Signs 1-7
- Tow Behind 1-7
- Auger 1-8
- Tow Behind Rear 1-8
- Tow Between 1-9

Lighting and Marking 1-10

SAFETY-ALERT SYMBOL

Watch for this symbol. It identifies potential hazards to health or personal safety. It means:

ATTENTION - BE ALERT.
Your Safety is involved.

Familiarize yourself with the location of all decals. Read them carefully to understand the safe operation of your machine.

Signal Words

The words **DANGER, WARNING** or **CAUTION** are used with the safety alert symbol. Learn to recognize the safety alerts, and follow the recommended precautions and safe practices.

Three words are used in conjunction with the safety-alert symbol:

DANGER — **Indicates an imminently hazardous situation that, if not avoided, will cause DEATH OR VERY SERIOUS INJURY.**

WARNING — **Indicates a potentially hazardous situation that, if not avoided, could cause DEATH OR SERIOUS INJURY.**

CAUTION — **Indicates a potentially hazardous situation that, if not avoided, may cause a MINOR INJURY.**

Replace any **DANGER, WARNING, CAUTION** or instructional decal that is not readable or is missing. The location and part number of these decals is identified later in this section of the manual.

The words **Important** and **Note** are not related to personal safety but are used to give additional information and tips for operating or servicing this equipment.

IMPORTANT: Identifies special instructions or procedures which, if not strictly observed could result in damage to, or destruction of the machine, process or its surroundings.

NOTE: Indicates points of particular interest for more efficient and convenient repair or operation.

General Operation

- **DO NOT RIDE!!** Do not allow riders on the implement when in motion.
- Do not allow extra riders in the tractor unless an instructor seat and seat belt are available.
- **Check behind** when backing up.
- **Reduce speed** when working in hilly terrain.
- Never allow anyone within the immediate area when operating machinery.
- **Keep all shields in place**, replace them if removed for service work.
- Always lock auger attachment in raised position.
- Keep hands clear of tank opening when closing lid. Keep lid seal clean to ensure proper sealing.
- **Do Not enter tank unless another person is present and the tractor engine has been shut off.**

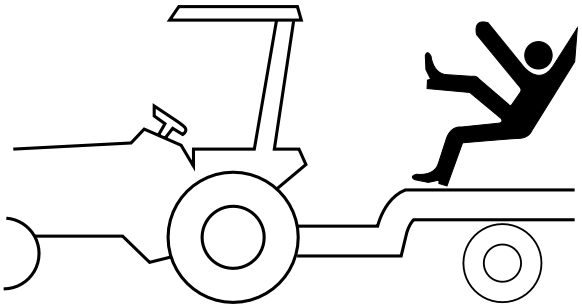

Tractor Operation

- Be aware of the correct tractor operating procedures, when working with implements.
- Review tractor operator's manual.
- Secure hitch pin with a retainer and lock drawbar in centre position.

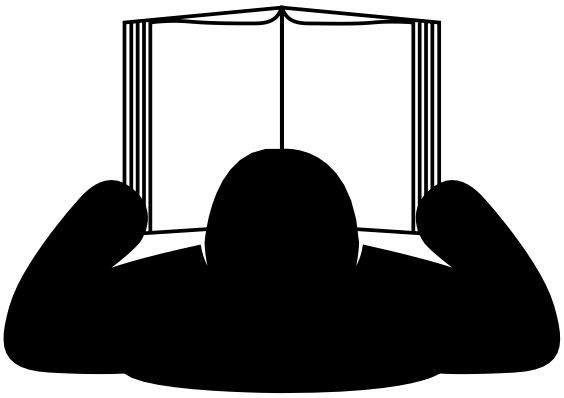

Chemicals

- **Use extreme care** when cleaning, filling or making adjustments.
- **Always read** granular chemical or treated seed manufacturer's warning labels carefully and remember them.
- Wear close fitting clothing and appropriate personal protective equipment for the job as specified by the chemical and/or seed manufacturer.
- **Always wear** safety goggles, breathing apparatus and gloves when handling with granular chemical or treated seed.
- **Do not feed** any treated seed to livestock. Treated seed is poisonous and may cause harm to persons or livestock.
- **Wash exposed skin immediately** - do not leave chemicals on your skin.
- **Properly store** chemicals in original containers with labels intact per the manufacturer's instructions.
- Always follow the manufacturer's operating instructions and warning labels when operating an ammonia tank with the equipment.
- **Do Not enter tank unless another person is present and the tractor engine has been shut off.**

Danger

Failure to comply may result in death or serious injury.

Read Operator's Manual and decals on **Ammonia** tank before operating Air Drill. Become familiar with all warnings, instructions, and controls.

Always wear gloves and goggles when transferring or handling ammonia.

Always stay clear of hose and valve openings.

Always be sure pressure is relieved before disconnecting hoses or parts.

Always secure connecting parts and safety chains before towing ammonia trailer.

Always have ample water available in case of exposure to ammonia liquid or gases.

Transporting

- **Be aware** of the height, length and width of implement. Make turns carefully and be aware of obstacles and overhead electrical lines.
- Empty tanks before transporting. Do Not Exceed 20 M.P.H. (32 kph) with an empty air cart.
- Use an agricultural tractor that is large enough with sufficient braking capacity so that the weight of the loaded equipment towed does not exceed 1.5 times the weight of the tractor.
- Use flashing amber warning lights, turn signals and SMV emblems when on public roads.
- Do not transport in poor visibility.
- The slow moving vehicle (SMV) emblem and reflectors must be secured and be visible on the machine for transport.
- Avoid soft surfaces, the additional wing weight on the centre wheels could cause the machine to sink.
- Ensure safety chain is attached correctly to the towing vehicle and the hitch of the seed cart.
- Check that wings are firmly seated in transport wing stops, and lock pins installed.
- Secure transport locks on depth control cylinders.
- Be familiar with and adhere to local laws.

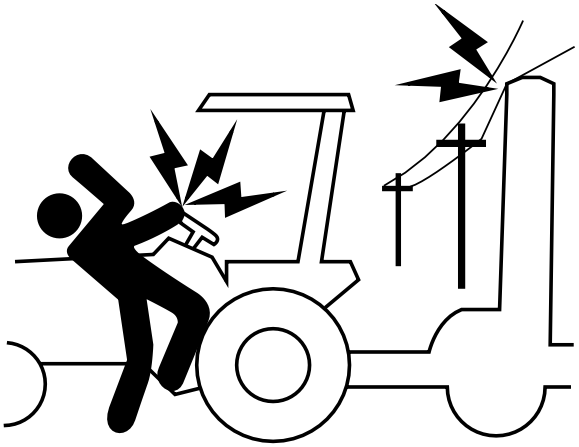

Hydraulics

- **Do not** search for high pressure hydraulic leaks without hand and face protection. A tiny, almost invisible leak can penetrate skin, thereby requiring immediate medical attention.
- Use cardboard or wood to detect leaks - never your hands.
- Double check that all is clear before operating hydraulics.
- **Never** remove hydraulic hoses or ends with machine elevated. Relieve hydraulic pressure before disconnecting hydraulic hoses or ends.
- Maintain proper hydraulic fluid levels.
- Keep all connectors clean for positive connections.
- Ensure all fittings and hoses are in good condition.
- Do not stand under wings.

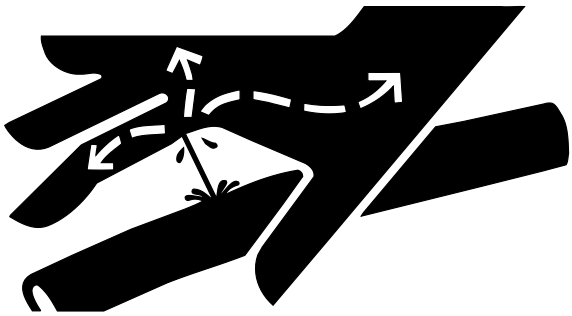

Maintenance

- **Shut tractor engine off** before making any adjustments or lubricating the machine.
- **Block** machine securely to prevent any movement during servicing.
- Wear close fitting clothing and appropriate personal protective equipment for the job.
- **Always wear** safety goggles, breathing apparatus and gloves when working on seeder filled with granular chemical or treated seed per the manufacture's instructions.
- Do not modify the machine.

Caution

Care should be taken when working near the Air Cart while the fan is running. Product blowing out of the system could cause personal injury.

Caution

Keep service area clean and dry. Wet or oily floors are slippery. Wet spots can be dangerous when working with electrical equipment.

Storage

- Store implement away from areas of main activity.
- Level implement and block up securely to relieve pressure on jack.
- Do not allow children to play on or around implement.

Safety Signs

Tow Behind

CAUTION

To avoid injury, do not open lids while fan is operating. Air gust may contain dust and particles.

N15094

WARNING

Personal injury or property damage may result from loss of control.

- Always use large enough tractor with sufficient braking capacity.
  - ➢ Weight of fully loaded implement should not be more than 1.5 times weight of tractor.
- Maximum recommended towing speed is 20 mph (32 km/h).
- Use flashing amber warning lights and SMV emblem when on public roads, except where prohibited by law.
- Refer to tractor and implement Operator's Manuals for weights and further information.

N24301

IMPORTANT

WHEN THE MACHINES ARE BEING TOWED BY A SEMI TRACTOR OR TRUCKS OF ANY DESCRIPTION THE UNITS MUST BE TOWED SEPARATELY FROM THE SEEDING TOOL WITH THE TOW HITCH PROVIDED!

N25674

WARNING

This implement may exceed maximum road regulations. Before you transport this implement contact a local agency regarding road regulations concerning maximum allowable implement dimensions.

C31201

IMPORTANT

ENSURE THAT ALL WHEEL NUTS ARE TORQUED TO THE FOLLOWING:

- 5/8" Tapered Wheel Nuts - 150 ft-lbs
- 3/4" Flanged Wheel Nuts - 270 ft-lbs

N24412

WARNING

Keep off while machine is moving or mechanism is running.

D13705

Safety Signs - continued

Auger

Tow Behind Rear

Safety Signs - continued

Tow Between

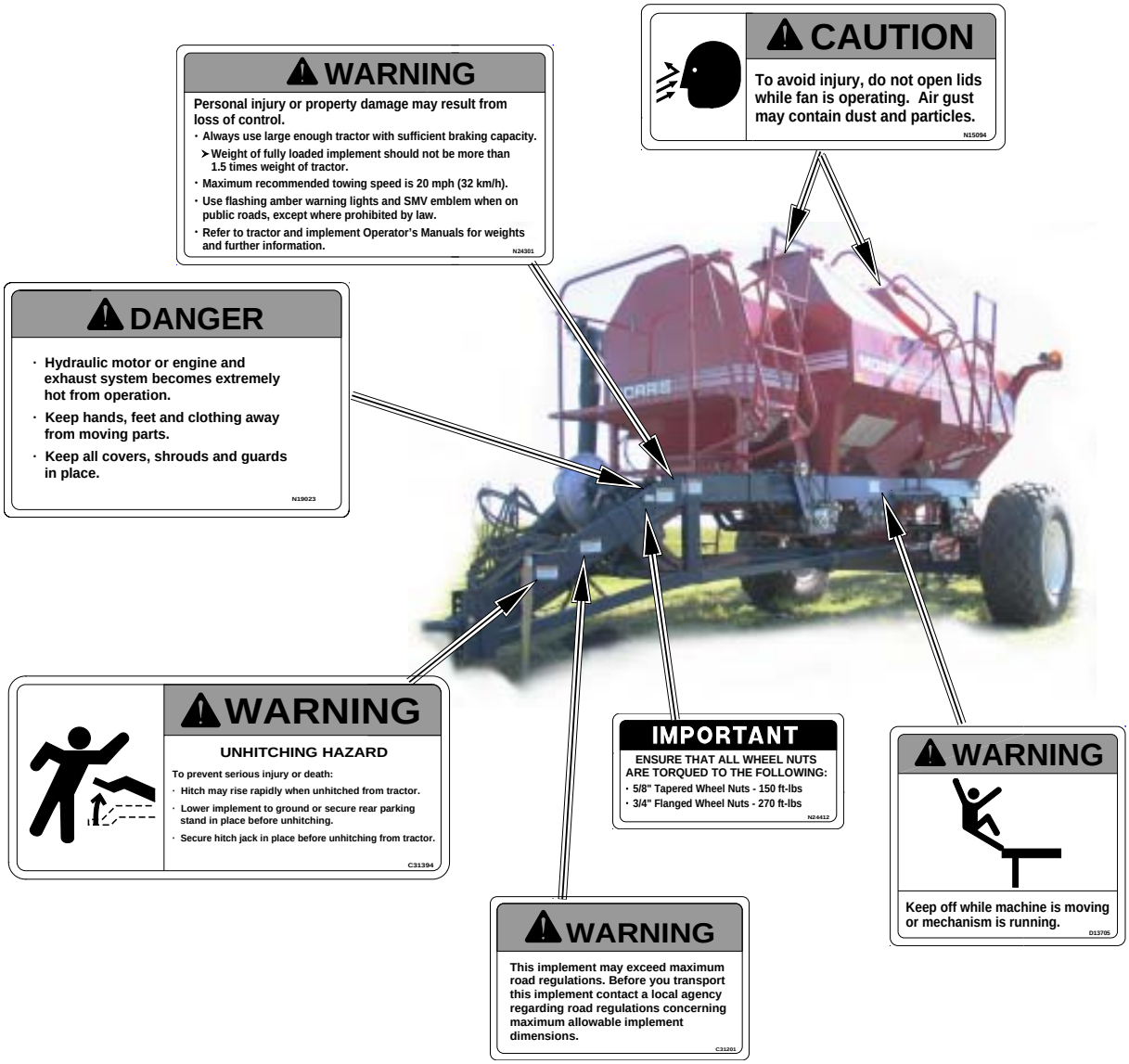

Lighting and Marking

MORRIS recommends the use of the correct lighting and marking to meet the ASAE standard for roadway travel. Be familiar with and adhere to local laws.

Amber warning and red tail lights secured on the machine promote correct transportation of this implement.

Note: Always replace missing or damaged lights and/or connectors.

Amber warning and red tail lights must be mounted to the rear of the implement and be visible from front and rear. The lights must be within 16 inches (41 cm) of the extremities of the machine and at least 39 inches (99 cm) but not over 10 feet (3 m) above ground level.

Note: Always replace missing or damage front, side, rear reflectors and SMV emblem.

Tillage Unit

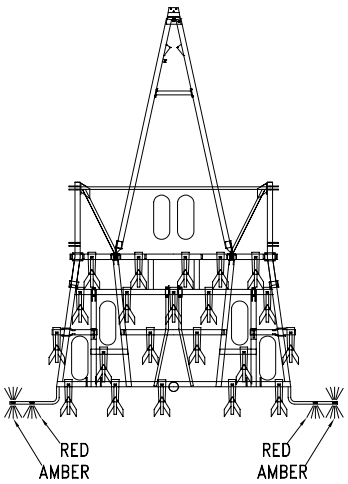

Seeding Unit

Tow Between

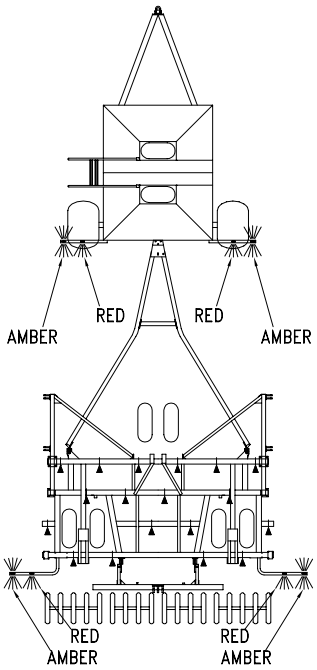

Seeding Unit

Tow Behind

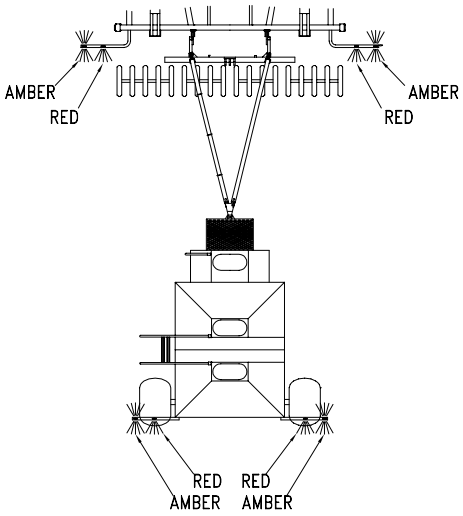

Lighting and Marking - continued

Seeding Unit - Tow Between with Packer Bar

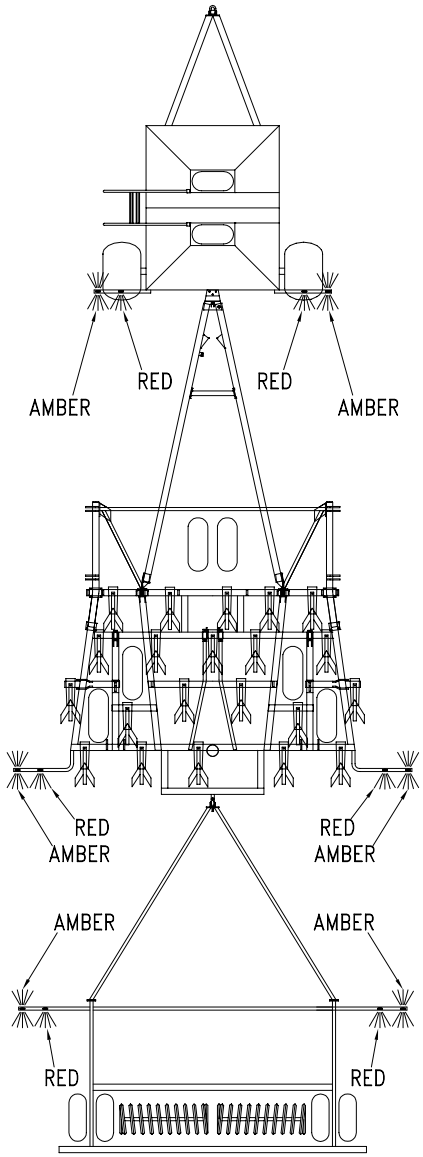

Seeding Unit - Tow Behind with Packer Bar

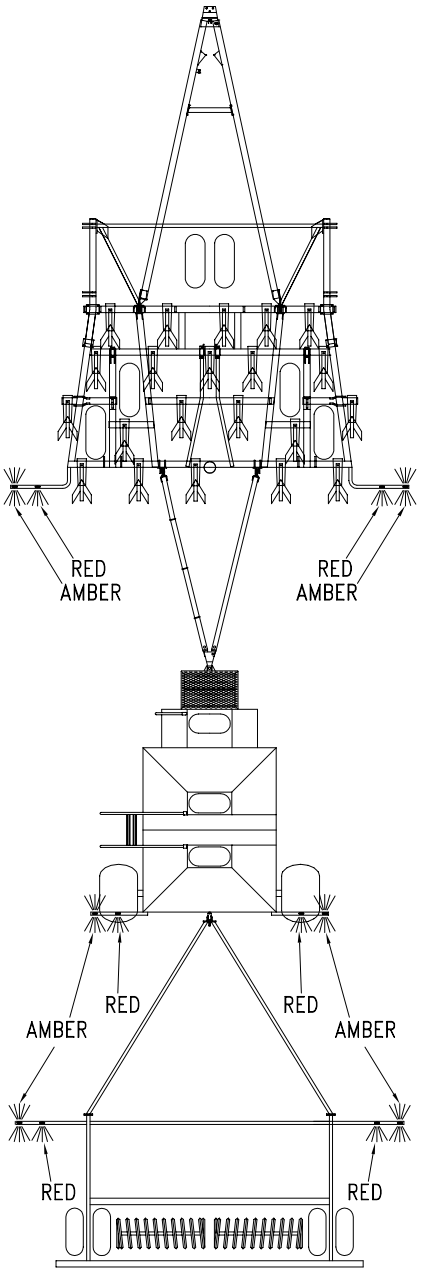

Notes

Section 2: Specifications

Section Contents

7130 & 7180 Models 2-2
7130 & 7180 - 2/3 Meter 2-3
7180 Liquid Tank Models 2-4
7240 Models 2-5
7252 Models 2-6
7300 Models 2-7

Specifications

7130 & 7180 Models

7000 SERIES AIR CART
Specifications and Options

Model	7130	7180	
Configuration	**Tow Behind**	**Tow Behind**	**Tow Between**
Length without auger	17' 5" (5.31 m)	17' 5" (5.31 m)	20' 3" (6.17 m)
Length with auger	22' 5" (6.83 m)	22' 5" (6.83 m)	25' 3" (7.70 m)
Height - Hydraulic Drive	9' 7" (2.92 m)	10' 9" (3.28 m)	10' 9" (3.28 m)
Height - Engine Drive	10' 4" (3.15 m)	13' 8" (4.17 m)	N/A
Width	10' 10" (3.3 m)	11' 4" (3.45 m)	11' 4" (3.45 m)
Weight (Hydraulic Drive with Auger)	5,315 lbs. (2,392 kg)	5,720 lbs. (2,574 kg)	5,420 lbs. (2,439 kg)
Safety Lights	Standard	Standard	Standard
Safety Chain	Standard	Standard	Standard
Tank Capacity - Front Tank	48 bushels/3,456 lbs. (1,750 l)	71 bushels/5,112 lbs. (2,580 l)	71 bushels/5,112 lbs. (2,580 l)
Tank Capacity - Rear Tank	82 bushels/5,904 lbs. (2,980 l)	109 bushels/7,848 lbs. (3,970 l)	109 bushels/7,848 lbs. (3,970 l)
Tank Capacity - Total	130 bushels/167 ft. cu. (4,730 l)	180 bushels/231 ft. cu. (6,550 l)	180 bushels/231 ft. cu. (6,550 l)
Tank Access Screens	Optional	Optional	Optional
Tank Access Ladder R.H.S.	Standard	Standard	Standard
Fan Speed	Up to 5,000 r.p.m.	Up to 5,000 r.p.m.	Up to 5,000 r.p.m.
Fan Impeller	13" (33 cm) Diameter	13" (33 cm) Diameter	13" (33 cm) Diameter
Gas Engine Drive/Gas Tank Capacity	Optional 20 HP (15 kW) Kohler 17 Imp. Gal. (77 l)	Optional 24 HP (18 kW) Onan 17 Imp. Gal. (77 l)	N/A
Hydraulic Drive (Closed Centre or Closed Centre Load Sensing systems required)	Optional 10cc piston type orbit motor (Maximum 13 U.S. gal./min.) (49 l/min.) (Minimum 2100 p.s.i.) (14,469 kPa)	Optional 12cc piston type orbit motor (Maximum 15.5 U.S. gal./min.) (59 l/min.) (Minimum 2100 p.s.i.) (14,469 kPa)	Standard 12cc piston type orbit motor (Maximum 15.5 U.S. gal./min.)(Max 59 l/min.) (Minimum 2100 p.s.i.) (14,469 kPa)
Loading Auger	Standard (7" Diameter x 17' Long)(0.18 m x 5.18 m)	Standard (7" Diameter x 18.5' Long) (0.18 m x 5.64 m)	Standard (7" Diameter x 18.5' Long) (0.18 m x 5.64 m)
Brush Flighting Kit (Used with peas)	Optional	Optional	Optional
Tires - Floatation	(3) 16.5 x 16.1 - 6 ply rating	(3) 21.5 x 16.1 - 6 ply rating	(2) 21.5 x 16.1 - 6 ply rating
Tires - Optional	(3) 21.5 x 16.1 - 6 ply rating	(3) 21.5 x 16.1 Rice - 8 ply rating	(2) 21.5 x 16.1 Rice - 8 ply rating
Tires - Three Point Hitch	N/A	N/A	(2) 18.4 x 26 - 10 ply rating
Metering System - Ground Driven	Standard	Standard	Standard
Meter Shut Off	Electric	Electric	Electric
Tillage Mounted Work Switch	Optional	Optional	Optional
Number Secondary Runs - Single Shoot	21 to 80	21 to 80	21 to 80
Number Secondary Runs - Double Shoot	42 to 160	42 to 160	42 to 160
Primary Hose - Diameter	2 1/2" (6.4 cm)	2 1/2" (6.4 cm)	2 1/2" (6.4 cm)
Secondary Hose - Diameter	15/16" (2.4 cm)	15/16" (2.4 cm)	15/16" (2.4 cm)
Frame	Formed 4" x 6" tubing (10 cm x 15 cm)	Formed 4" x 6" tubing (10 cm x 15 cm)	Formed 4" x 6" tubing (10 cm x 15 cm)
Walk Through Tank	Standard	Standard	Standard
Easy Clean Out System	Standard	Standard	Standard
Meter Drive Options: -Second Clutch (For spot fertilizing on the go)	Optional	Optional	Optional
-Kit (Fertilizer Bander) (For easy one transmission rate setting)	Optional	Optional	Optional
Monitor - (Shaft Motion (3), Bin Level (3), Fan Speed, Acre Tally, Ground Speed)	Standard Optional Seed Flow	Standard Optional Seed Flow	Standard Optional Seed Flow
Three Point Hitch (Categories II, III, III-N)	N/A	N/A	Optional
Trailing Hitch	Optional	Optional	N/A
Mechanical Acre Meter	Optional	Optional	Optional
Hitch Stand	Optional	Optional	N/A
Scraper (Front Wheel Only)	Optional	Optional	N/A
Third Tank - Capacity	N/A	Optional 40 cu. ft. (1,129 l)	Optional 40 cu. ft. (1,129 l)
Granular Applicator	Optional	Optional	Optional
- Capacity	30 cu. ft. (847 l)	30 cu. ft. (847 l)	30 cu. ft. (847 l)
- Meter shut-off	Electric	Electric	Electric
- Zapper clutch	Standard	Standard	Standard
- Working width	26 ft. to 64 ft. (7.93 m to 1,951 m)	26 ft. to 64 ft. (7.93 m to 1,951 m)	26 ft. to 64 ft. (7.93 m to 1,951 m)
- Metering system	Ground Driven	Ground Driven	Ground Driven

7130 & 7180 - 2/3 Meter

7000 SERIES AIR CART
Specifications and Options

Model	7130 - 2/3 metre	7180 - 2/3 metre
Configuration	**Tow Behind**	**Tow Behind**
Length without auger	17' 5" (5.31 m)	17' 5" (5.31 m)
Length with auger	22' 5" (6.83 m)	22' 5" (6.83 m)
Height - Hydraulic Drive	9' 7" (2.92 m)	10' 9" (3.28 m)
Track Width - 2 metre	2.044 m	2.044 m
- 3 metre	3.050 m	3.050 m
Overall Width		
- 2 metre (Hazard Lights widest point)	10' 9" (3.28 m)	10' 9" (3.28 m)
- 3 metre	10' 10" (3.3 m)	11' 4" (3.45 m)
Weight (Hydraulic Drive with Auger)		
- 2 metre	6,315 lbs. (2,870 kg)	6,710 lbs. (3,050 kg)
- 3 metre	5,815 lbs. (2,643 kg)	6,220 lbs. (2,827 kg)
Safety Lights	Standard	Standard
Safety Chain	Standard	Standard
Tank Capacity - Front Tank	48 bushels/3,456 lbs. (1,750 l)	71 bushels/5,112 lbs. (2,580 l)
- Rear Tank	82 bushels/5,904 lbs. (2,980 l)	109 bushels/7,848 lbs. (3,970 l)
- Total	130 bushels/167 ft. cu. (4,730 l)	180 bushels/231 ft. cu. (6,550 l)
Tank Access Screens	Optional	Optional
Tank Access Ladder R.H.S.	Standard	Standard
Fan Speed	Up to 5,000 r.p.m.	Up to 5,000 r.p.m.
Fan Impeller	13" (33 cm) Diameter	13" (33 cm) Diameter
Hydraulic Drive (Closed Centre or Closed Centre Load Sensing systems required)	10cc piston type orbit motor (Maximum 13 U.S. gal./min.) (49 l/min.) (Minimum 2100 p.s.i.) (14,469 kPa)	12cc piston type orbit motor (Maximum 15.5 U.S. gal./min.) (59 l/min.) (Minimum 2100 p.s.i.) (14,469 kPa)
Loading Auger	Standard (7" Diameter x 17' Long)(0.18 m x 5.18 m)	Standard (7" Diameter x 18.5' Long) (0.18 m x 5.64 m)
Brush Flighting Kit (Used with peas)	Optional	Optional
Tires - Floatation	(4) 16.5 x 16.1 - 6 ply rating	(4) 21.5 x 16.1 - 6 ply rating
- Optional	(4) 21.5 x 16.1 - 6 ply rating	(4) 21.5 x 16.1 Rice - 8 ply rating
Metering System - Ground Driven	Standard	Standard
- VRT	Optional	Optional
Meter Shut Off	Electric	Electric
Tillage Mounted Work Switch	Optional	Optional
Number Secondary Runs - Single Shoot	21 to 80	21 to 80
Number Secondary Runs - Double Shoot	42 to 160	42 to 160
Primary Hose - I.D. Diameter	2 1/2" (64 mm)	2 1/2" (64 mm)
Secondary Hose - I.D. Diameter	15/16" (24 mm)	15/16" (24 mm)
Frame	Formed 4" x 6" tubing (10 cm x 15 cm)	Formed 4" x 6" tubing (10 cm x 15 cm)
Walk Through Tank	Standard	Standard
Easy Clean Out System	Standard	Standard
Meter Drive Options: -Second Clutch (For spot fertilizing on the go)	Optional	Optional
-Kit (Fertilizer Bander) (For easy one transmission rate setting)	Optional	Optional
Monitor - (Shaft Motion (3), Bin Level (3), Fan Speed, Acre Tally, Ground Speed)	Standard Optional Seed Flow	Standard Optional Seed Flow
Three Point Hitch (Categories II, III, III-N)	N/A	N/A
Trailing Hitch	Optional	Optional
Mechanical Acre Meter	Optional	Optional
Hitch Stand	Optional	Optional
Scraper (Front Wheel Only)	Optional	Optional
Third Tank - Capacity	N/A	Optional 40 cu. ft. (1,129 l)
Granular Applicator - Capacity	Optional 30 cu. ft. (847 l)	Optional 30 cu. ft. (847 l)

7180 Liquid Tank Models

7000 Series Air Cart Specifications and Options		
Model	**7180 LT**	
Configuration	**Tow Behind**	**Tow Between**
Length without auger (with auger)	20' 4" (6.2 m) (25' 8" (7.82 m))	19' 2" (5.84 m) (26' 10" (8.18 m))
Height - Hydraulic Drive	11' 2" (3.4 m)	11' 2" (3.4 m)
- Engine Drive	12' 9" (3.89 m)	N/A
Width	12' (3.66 m)	12' (3.66 m)
Weight (Hydraulic Drive with Auger)	8,828 lbs. (4,013 kg)	8,348 lbs. (3,795 kg)
Safety Lights	Standard	Standard
Safety Chain	Standard	Standard
Tank Capacity - Front Tank	500 gals (2,275 l) Not Supplied	500 gals (2,275 l) Not Supplied
- Middle Tank	71 bushels/5,112 lbs. (2,580 l)	71 bushels/5,112 lbs. (2,580 l)
- Rear Tank	109 bushels/7,848 lbs. (3,970 l)	109 bushels/7,848 lbs. (3,970 l)
- Total (Middle & Rear)	180 bushels/231 ft. cu. (6,550 l)	180 bushels/231 ft. cu. (6,550 l)
Tank Screens	Optional	Optional
Tank Access Ladder R.H.S.	Standard	Standard
Fan Speed	Up to 5,000 r.p.m.	Up to 5,000 r.p.m.
Fan Impeller Diameter	13" (33 cm)	13" (33 cm)
Gas Engine Drive/Gas Tank Capacity	Optional 24 HP (18 kW) Onan 17 Imp. Gal. (77 l)	N/A
Hydraulic Drive (Closed Centre or Closed Centre Load Sensing systems required)	Optional 12cc piston type orbit motor (Maximum 15.5 U.S. gal./min.) (59 l/min.) (Minimum 2100 p.s.i.) (14,469 kPa)	Optional 12cc piston type orbit motor (Maximum 15.5 U.S. gal./min.) (59 l/min.) (Minimum 2100 p.s.i.) (14,469 kPa)
Loading Auger	Standard (7" Diameter x 18.5' Long) (0.18 m x 5.64 m)	Standard (7" Diameter x 18.5' Long) (0.18 m x 5.64 m)
Brush Flighting Kit (Used with peas)	Optional	Optional
Tires - Floatation (Front)	(2) 21.5 x 16.1 - 6 ply rating	N/A
- Floatation (Rear)	(2) 23.1 x 26 - 8 ply rating	(2) 23.1 x 26 - 8 ply rating
- Optional (Rear)	(2) 23.1 x 26 Rice - 10 ply rating	(2) 23.1 x 26 Rice - 10 ply rating
- Three Point Hitch (Rear)	N/A	(2) 23.1 x 26 - 12 ply rating
Metering System - Ground Driven	Standard	Standard
Meter Shut Off	Electric	Electric
Tillage Mounted Work Switch	Optional	Optional
Number Secondary Runs - Single Shoot	21 to 80	21 to 80
Number Secondary Runs - Double Shoot	42 to 160	42 to 160
Broadcast System	Optional	Optional
Primary Hose - Diameter	2 1/2" (6.4 cm)	2 1/2" (6.4 cm)
Secondary Hose - Diameter	15/16" (2.4 cm)	15/16" (2.4 cm)
Frame	Formed 4" x 8" tubing (10 cm x 20 cm)	Formed 4" x 8" tubing (10 cm x 20 cm)
Walk Through Tank	Standard	Standard
Easy Clean Out System	Standard	Standard
Meter Drive Options: -Second Clutch (For spot fertilizing on the go)	Optional	Optional
-Fertilizer Bander Kit (For easy one transmission rate setting)	N/A	N/A
Monitor - (Shaft Motion (3), Bin Level (3), Fan Speed, Acre Tally, Ground Speed)	Standard Optional Seed Flow	Standard Optional Seed Flow
Three Point Hitch	N/A	Optional
Trailing Hitch	Optional	N/A
Mechanical Acre Meter	Optional	Optional
Hitch Stand	Optional	N/A
Scraper (Front Wheel Only)	N/A	N/A
Third Tank	N/A	N/A
Granular Applicator	N/A	N/A

7240 Models

7000 Series Air Cart Specifications and Options		
Model	**7240**	
Configuration	**Tow Behind**	**Tow Between**
Length without auger (with auger)	20' 4" (6.2 m) (25' 8" (7.82 m))	19' 2" (5.84 m) (26' 10" (8.18 m))
Height - Hydraulic Drive	11' 4" (3.45 m)	11' 4" (3.45 m)
- Engine Drive	12' 11" (3.94 m)	N/A
Width	12' (3.66 m)	12' (3.66 m)
Weight (Hydraulic Drive with Auger)	7,315 lbs. (3,325 kg)	6,825 lbs. (3,071 kg)
Safety Lights	Standard	Standard
Safety Chain	Standard	Standard
Tank Capacity - Front Tank	95 bushels/6,840 lbs. (3,460 l)	95 bushels/6,840 lbs. (3,460l)
- Rear Tank	145 bushels/10,440 lbs. (5,270 l)	145 bushels/10,440 lbs. (5,270 l)
- Total	240 bushels/308 ft. cu. (8,730 l)	240 bushels/308 ft. cu. (8,730 l)
Tank Screens	Optional	Optional
Tank Access Ladder R.H.S.	Standard	Standard
Fan Speed	Up to 5,000 r.p.m.	Up to 5,000 r.p.m.
Fan Impeller Diameter	13" (33 cm)	13" (33 cm)
Gas Engine Drive/Gas Tank Capacity	Optional 24 HP (18 kW) Onan 17 Imp. Gal. (77 l)	N/A
Hydraulic Drive (Closed Centre or Closed Centre Load Sensing systems required)	Optional 12cc piston type orbit motor (Maximum 15.5 U.S. gal./min.) (59l) (Minimum 2100 p.s.i.) (14,469 kPa)	Optional 12cc piston type orbit motor (Maximum 15.5 U.S. gal./min.) (59l) (Minimum 2100 p.s.i.) (14,469 kPa)
Loading Auger	Standard (8" Diameter x 20' Long) (0.2 m x 6.1 m)	Standard (8" Diameter x 20' Long) (0.2 m x 6.1 m)
Brush Flighting Kit (Used with peas)	Optional	Optional
Tires - Floatation (Front)	(2) 21.5 x 16.1 - 6 ply rating	N/A
- Floatation (Rear)	(2) 23.1 x 26 - 8 ply rating	(2) 23.1 x 26 - 8 ply rating
- Optional (Rear)	(2) 23.1 x 26 Rice - 10 ply rating	(2) 23.1 x 26 Rice - 10 ply rating
- Three Point Hitch (Rear)	N/A	(2) 23.1 x 26 - 12 ply rating
Metering System - Ground Driven	Standard	Standard
Meter Shut Off	Electric	Electric
Tillage Mounted Work Switch	Optional	Optional
Number Secondary Runs - Single Shoot	21 to 80	21 to 80
Number Secondary Runs - Double Shoot	42 to 160	42 to 160
Primary Hose - Diameter	2 1/2" (6.4 cm)	2 1/2" (6.4 cm)
Secondary Hose - Diameter	15/16" (2.4 cm)	15/16" (2.4 cm)
Frame	Formed 4" x 8" tubing (10 cm x 20 cm)	Formed 4" x 8" tubing (10 cm x 20 cm)
Walk Through Tank	Standard	Standard
Easy Clean Out System	Standard	Standard
Meter Drive Options: -Second Clutch (For spot fertilizing on the go)	Optional	Optional
-Fertilizer Bander Kit (For easy one transmission rate setting)	Optional	Optional
Monitor - (Shaft Motion (3), Bin Level (3), Fan Speed, Acre Tally, Ground Speed)	Standard Optional Seed Flow	Standard Optional Seed Flow
Three Point Hitch	N/A	Optional
Trailing Hitch	Optional	N/A
Mechanical Acre Meter	Optional	Optional
Hitch Stand	Optional	N/A
Scraper (Front Wheel Only)	N/A	N/A
Third Tank - Capacity	Optional 40 cu. ft. (1,129 l)	Optional 40 cu. ft. (1,129 l)
Granular Applicator - Capacity - Meter shut-off - Zapper clutch - Working width - Metering system	Optional 40 cu. ft. (1,129 l) Electric Standard 26 ft. to 64 ft. (7.93 m to 1,951 m) Ground Driven	Optional 40 cu. ft. (1,129 l) Electric Standard 26 ft. to 64 ft. (7.93 m to 1,951 m) Ground Driven

7252 Models

7000 Series Air Cart Specifications and Options		
Model	**7252**	
Configuration	**Tow Behind**	**Tow Between**
Length without auger (with auger)	20' 4" (6.2 m) (25' 8" (7.82 m))	19' 2" (5.84 m) (26' 10" (8.18 m))
Height - Hydraulic Drive	11' 2" (3.4 m)	11' 2" (3.4 m)
- Engine Drive	12' 9" (3.89 m)	N/A
Width	12' (3.66 m)	12' (3.66 m)
Weight (Hydraulic Drive with Auger)	8,828 lbs. (4,013 kg)	8,348 lbs. (3,795 kg)
Safety Lights	Standard	Standard
Safety Chain	Standard	Standard
Tank Capacity - Front Tank	71.3 bushels/5,134 lbs. (2,580 l)	71.3 bushels/5,134 lbs. (2,580 l)
- Middle Tank	71.3 bushels/5,134 lbs. (2,580 l)	71.3 bushels/5,134 lbs. (2,580 l)
- Rear Tank	109.3 bushels/7,881 lbs. (3,970 l)	109.3 bushels/7,881 lbs. (3,970 l)
- Total	252 bushels/323.4 ft. cu. (9,130 l)	252 bushels/323.4 ft. cu. (9,130 l)
Tank Screens	Optional	Optional
Tank Access Ladder R.H.S.	Standard	Standard
Fan Speed	Up to 5,000 r.p.m.	Up to 5,000 r.p.m.
Fan Impeller Diameter	13" (33 cm)	13" (33 cm)
Gas Engine Drive/Gas Tank Capacity	Optional 24 HP (18 kW) Onan 17 Imp. Gal. (77 l)	N/A
Hydraulic Drive (Closed Centre or Closed Centre Load Sensing systems required)	Optional 12cc piston type orbit motor (Maximum 15.5 U.S. gal./min.) (59l) (Minimum 2100 p.s.i.) (14,469 kPa)	Optional 12cc piston type orbit motor (Maximum 15.5 U.S. gal./min.) (59l) (Minimum 2100 p.s.i.) (14,469 kPa)
Loading Auger	Standard (7" Diameter x 18.5' Long) (0.18 m x 5.64 m)	Standard (7" Diameter x 18.5' Long) (0.18 m x 5.64 m)
Brush Flighting Kit (Used with peas)	Optional	Optional
Tires - Floatation (Front)	(2) 21.5 x 16.1 - 6 ply rating	N/A
- Floatation (Rear)	(2) 23.1 x 26 - 8 ply rating	(2) 23.1 x 26 - 8 ply rating
- Optional (Rear)	(2) 23.1 x 26 Rice - 10 ply rating	(2) 23.1 x 26 Rice - 10 ply rating
- Three Point Hitch (Rear)	N/A	N/A
Metering System - Ground Driven	Standard	Standard
Meter Shut Off	Electric	Electric
Tillage Mounted Work Switch	Optional	Optional
Number Secondary Runs - Single Shoot	21 to 80	21 to 80
Number Secondary Runs - Double Shoot	42 to 160	42 to 160
Broadcast System	Optional	Optional
Primary Hose - Diameter	2 1/2" (6.4 cm)	2 1/2" (6.4 cm)
Secondary Hose - Diameter	15/16" (2.4 cm)	15/16" (2.4 cm)
Frame	Formed 4" x 8" tubing (10 cm x 20 cm)	Formed 4" x 8" tubing (10 cm x 20 cm)
Walk Through Tank	Standard	Standard
Easy Clean Out System	Standard	Standard
Meter Drive Options: -Second Clutch (For spot fertilizing on the go)	Optional	Optional
-Fertilizer Bander Kit (For easy one transmission rate setting)	N/A	N/A
Monitor - (Shaft Motion (3), Bin Level (3), Fan Speed, Acre Tally, Ground Speed)	Standard Optional Seed Flow	Standard Optional Seed Flow
Three Point Hitch	N/A	Optional
Trailing Hitch	Optional	N/A
Mechanical Acre Meter	Optional	Optional
Hitch Stand	Optional	N/A
Scraper (Front Wheel Only)	N/A	N/A
Third Tank	N/A	N/A
Granular Applicator	N/A	N/A

7300 Models

7000 Series Air Cart Specifications and Options		
Model	**7300**	
Configuration	**Tow Behind**	**Tow Between**
Length without auger (with auger)	20' 4" (6.2 m) (25' 8" (7.82 m))	19' 2" (5.84 m) (26' 10" (8.18 m))
Height - Hydraulic Drive	12' (3.66 m)	12' (3.66 m)
- Engine Drive	13' 7" (4.14 m)	N/A
Width	12' (3.66 m)	12' (3.66 m)
Weight (Hydraulic Drive with Auger)	7,770 lbs. (3,479 kg)	7,325 lbs. (3,296 kg)
Safety Lights	Standard	Standard
Safety Chain	Standard	Standard
Tank Capacity - Front Tank	120 bushels/8,640 lbs. (4,360 l)	120 bushels/8,640 lbs. (4,360 l)
- Rear Tank	180 bushels/12,960 lbs. (6,550 l)	180 bushels/12,960 lbs. (6,550 l)
- Total	300 bushels/385 ft. cu. (10,910 l)	300 bushels/385 ft. cu. (10,910 l)
Tank Screens	Optional	Optional
Tank Access Ladder R.H.S.	Standard	Standard
Fan Speed	Up to 5,000 r.p.m.	Up to 5,000 r.p.m.
Fan Impeller Diameter	13" (33 cm)	13" (33 cm)
Gas Engine Drive/Gas Tank Capacity	Optional 24 HP (18 kW) Onan 17 Imp. Gal. (77 l)	N/A
Hydraulic Drive (Closed Centre or Closed Centre Load Sensing systems required)	Optional 12cc piston type orbit motor (Maximum 15.5 U.S. gal./min.) (59 l) (Minimum 2100 p.s.i.) (14,469 kPa)	Optional 12cc piston type orbit motor (Maximum 15.5 U.S. gal./min.) (59 l) (Minimum 2100 p.s.i.) (14,469 kPa)
Loading Auger	Standard (8" Diameter x 20' Long) (0.2 m x 6.1 m)	Standard (8" Diameter x 20' Long) (0.2 m x 6.1 m)
Brush Flighting Kit (Used with peas)	Optional	Optional
Tires - Floatation (Front)	(2) 21.5 x 16.1 - 10 ply rating	N/A
- Floatation (Rear)	(2) 23.1 x 26 - 12 ply rating	(2) 23.1 x 26 - 12 ply rating
- Optional (Rear)	(2) 23.1 x 26 Rice - 10 ply rating	(2) 23.1 x 26 Rice - 10 ply rating
- Three Point Hitch (Rear)	N/A	N/A
Metering System - Ground Driven	Standard	Standard
Meter Shut Off	Electric	Electric
Tillage Mounted Work Switch	Optional	Optional
Number Secondary Runs - Single Shoot	21 to 80	21 to 80
Number Secondary Runs - Double Shoot	42 to 160	42 to 160
Primary Hose - Diameter	2 1/2" (6.4 cm)	2 1/2" (6.4 cm)
Secondary Hose - Diameter	15/16" (2.4 cm)	15/16" (2.4 cm)
Frame	Formed 4" x 8" tubing (10 cm x 20 cm)	Formed 4" x 8" tubing (10 cm x 20 cm)
Walk Through Tank	Standard	Standard
Easy Clean Out System	Standard	Standard
Meter Drive Options: -Second Clutch (For spot fertilizing on the go)	Optional	Optional
-Fertilizer Bander Kit (For easy one transmission rate setting)	Optional	Optional
Monitor - (Shaft Motion (3), Bin Level (3), Fan Speed, Acre Tally, Ground Speed)	Standard Optional Seed Flow	Standard Optional Seed Flow
Three Point Hitch	N/A	N/A
Trailing Hitch	Optional	N/A
Mechanical Acre Meter	Optional	Optional
Hitch Stand	Optional	N/A
Scraper (Front Wheel Only)	N/A	N/A
Third Tank - Capacity	Optional 40 cu. ft. (1,129 l)	N/A
Granular Applicator - Capacity - Meter shut-off - Zapper clutch - Working width - Metering system	Optional 40 cu. ft. (1,129 l) Electric Standard 26 ft. to 64 ft. (7.93 m to 1,951 m) Ground Driven	N/A

Notes

Section 3: Checklist

Section Contents

Manuals 3-2
Parts Manual 3-2
Assembly Manual 3-2
Checklist 3-3

SAFETY-ALERT SYMBOL

Watch for this symbol. It identifies potential hazards to health or personal safety. It points out safety precautions. It means:

ATTENTION - BE ALERT.

Your safety is involved.

Manuals

Note: Pre-Delivery Inspection Form must be completed and submitted to Morris Industries within 30 days of delivery date.

Warranty Void if Not Registered

Parts Manual	Order Part Number N27799
Assembly Manual	Order Part Number N30800

Checklist

Please read the Operator's Manual carefully and become a "SAFE" operator.

Adopt a good lubrication and maintenance program.

General

____Check if assembled correctly.

____Proper chain tension.

____Check hose connections

____Ensure cleanout door and tank lid are connected correctly.

____Both chains for the quick change transmissions are supplied: One 86 link and one 72 link.

Lubrication - Grease

____Metering Drive

____Axle Pivots

____Auger Pivots

Lubrication - Oil

____Drive chains

Tire Pressure

____See maintenance, section 7

Transport

____Tighten wheel bolts.

____Check hose connections.

OWNER REFERENCE

Model: _____

Serial No: _____

Dealer: _____

Town: _____ State: _____

Phone: _____

OWNER/OPERATOR: _____

Date: _____

TAKE SAFETY SERIOUSLY.

DO NOT TAKE NEEDLESS CHANCES!!

Notes

Section 4: Introduction

Section Contents

Introduction 4-2
Options 4-3
- Acre Tally 4-3
- Second Clutch 4-3
- Hydraulic Auger 4-4
- Right Hand Side Ladder 4-4
- Auger Spout Extension Kit #N23188 4-4
- Large Fan Screen 4-4
- Mounted Packers 4-5
- Mounted Harrow Kit 4-5
- Granular Applicator 4-5
- Third Tank 4-5
- Double Shoot Distribution 4-6
- Hitch Stand Kit (Tow Behind) 4-6
- Flow Sensors 4-7
- Pin Sensor System 4-7
- Optical Sensor System 4-7
- Rear Tow Hitch 4-7
- Fertilizer Banding Kit 4-8
- Banding Kit (using rear transmission) 4-8
- Banding Kit (using front transmission) 4-8

Seed Boots 4-9
Collector Plug 4-9

Introduction

This Operator's Manual has been carefully prepared to provide the necessary information regarding the operation and adjustments, so that you may obtain maximum service and satisfaction from your new MORRIS 7000 Series Air Cart.

To protect your investment, study your manual before starting or operating in the field. Learn how to operate and service your 7000 Series Air Cart correctly, failure to do so could result in personal injury or equipment damage.

If you should find that you require information not covered in this manual, contact your local MORRIS Dealer. The Dealer will be glad to answer any questions that may arise regarding the operation of your MORRIS 7000 Series Air Cart.

MORRIS Dealers are kept informed on the best methods of servicing and are equipped to provide prompt efficient service if needed.

Occasionally, your 7000 Series Air Cart may require replacement parts. Your Dealer will be able to supply you with the necessary replacement parts required. If the Dealer does not have the necessary part, the MORRIS Factory will supply the Dealer with it promptly.

Your MORRIS 7000 Series Air Cart is designed to give satisfaction even under difficult conditions. A small amount of time and effort spent in protecting it against rust, wear and replacing worn parts will increase the life and trade-in value.

Keep this book handy for ready reference at all times. It is the policy of Morris Industries Ltd. to improve its products whenever it is possible to do so. The Company reserves the right to make changes or add improvements at any time without incurring any obligation to make such changes on machines sold previously.

The MORRIS 7000 Series Air Cart represents the latest in Air Cart design technology. There are five sizes available, a 130 bushel (4,730 liters) cart, a 180 bushel (6,550 liters) cart, a 240 bushel (8,730 liters) cart, 252 bushel (9,130 liters) cart and a 300 bushel (10,910 liters) cart with hydraulic fan drive or an engine fan drive. The 130 and 180 bushel carts incorporate a three wheel, wide-stance high clearance frame. The 240, 252 bushel and 300 bushel carts incorporate a four wheel, wide-stance high clearance frame. The high clearance frame gives easy access to the metering wheels and the easiest cleanout in the industry. The 7130, 7180, 7240 and 7300 carts have a 60:40 tank split. The 252 carts have a 30:30:40 tank split. The tank lids are easily accessed by the convenient stairs and tank walk-through.

Each tank has it's own metering system and metering drive. Included with the unit is a sample collector box that an operator can use to confirm seeding rates. The meter drives are positive, convenient, simple to set and are ground driven through an electric clutch. The metering system incorporates spiral fluted wheels. The size of the metering wheel is matched to the number of outlets on the secondary divider giving the best in accuracy. The spiral fluted metering wheels combined with the multi-range transmission allows a full range of products like Canola to peas to be seeded without having to change the metering wheels.

The Air Cart comes equipped with a monitor that senses both bin levels, motion of both metering shafts and fan speed. It also gives ground speed and provides an acremeter.

High quality 2 1/2" (64 mm) diameter hose is standard equipment for the distribution system. The patented flat fan divider, which is matched in size to the metering wheel, ensures final accurate distribution of the product.

Options

Acre Tally

The tamper proof mechanical acre tally counter mounts onto the crank handle shaft. The acre tally counter gives accumulated acres and can not be reset to zero.

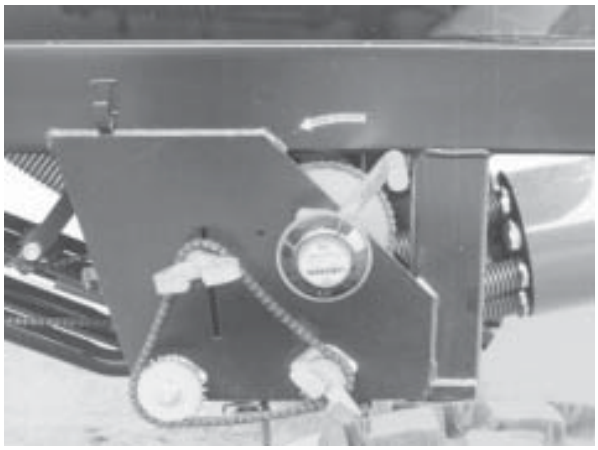

Second Clutch

The second clutch is mounted to the rear tank metering shaft.

This enables the operator to stop or start the rear metering while the front metering continues. This is especially useful for spot fertilizing.

The clutch is electric operated and is switched from inside the tractor cab.

Note: The primary clutch still controls the front shaft and back shaft without the secondary clutch.

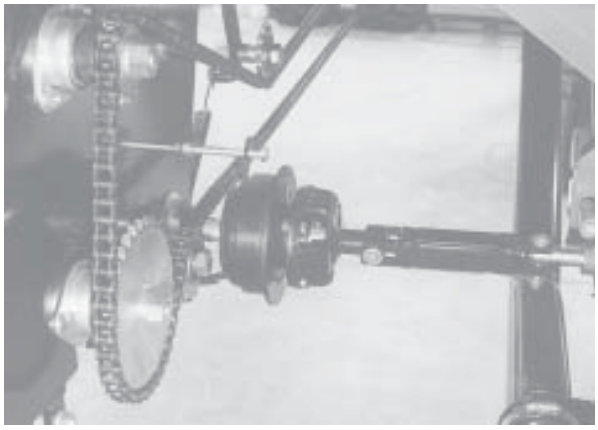

Options - continued

Hydraulic Auger

The optional hydraulic auger is designed to make loading and unloading product from the Air Cart tank very simple and easy.

An optional Brush Flighting Kit is available to gently handle seed.

For faster loading of the 7240 and 7300 Air Cart tanks an optional 8 inch auger is available.

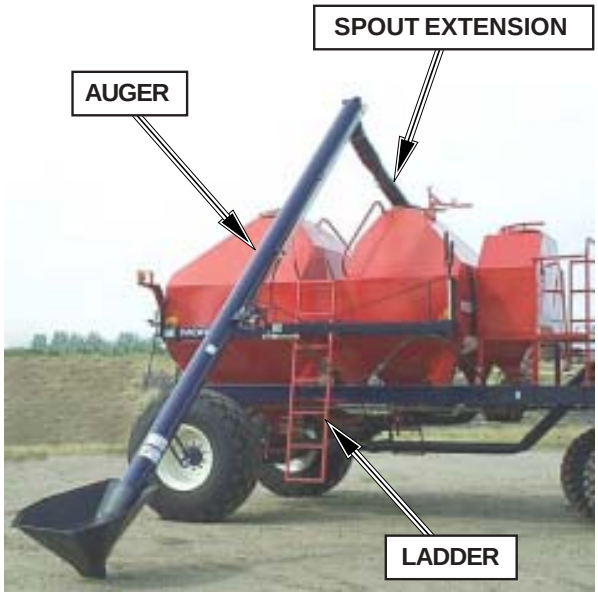

Right Hand Side Ladder

This ladder allows the operator easy access between the tanks and auger, making filling the tanks more convenient.

Auger Spout Extension Kit #N23188

The spout extension allows the operator easy access between the tanks without repositioning the auger, making filling the tanks more convenient.

Large Fan Screen

The larger fan screen helps reduce the requirement of having to continually clean the fan screen under severe straw swirling conditions.

The larger fan screen is easily installed by removing the fan screen retaining bolts and inserting the larger fan screen in its place as shown.

Options - continued

Mounted Packers

Morris offers mounted packers for in row packing of seed.

The packers feature a quick change device making it easy to change over to harrows when packing is not desired.

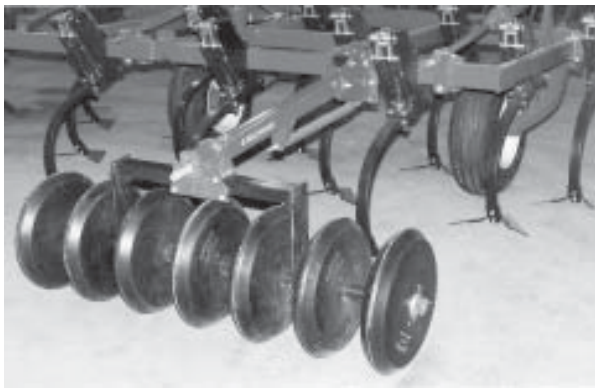

Mounted Harrow Kit

The mounted harrow kit allows two six foot harrows to be attached on the tow behind Air Cart models.

The harrows will eradicate the Air Cart tracks.

Granular Applicator

Available in two sizes:

- 30 cu. ft. (847 liter) unit for the 7130/7180
- 40 cu. ft. (1,129 liter) unit for the 7240/7300.

The Granular Applicator is required to apply clay and limestone based granular chemicals.

Third Tank

Available in two sizes:

- 40 cu. ft. (1,129 liter) unit for the 7180/7240/7300.

The Thrid Tank is required to apply seed and starter fertilizer, while deep banding additional fertilizer at the same time.

Options - continued

Double Shoot Distribution

This is used when fertilizer is placed at a separate depth from the seed.

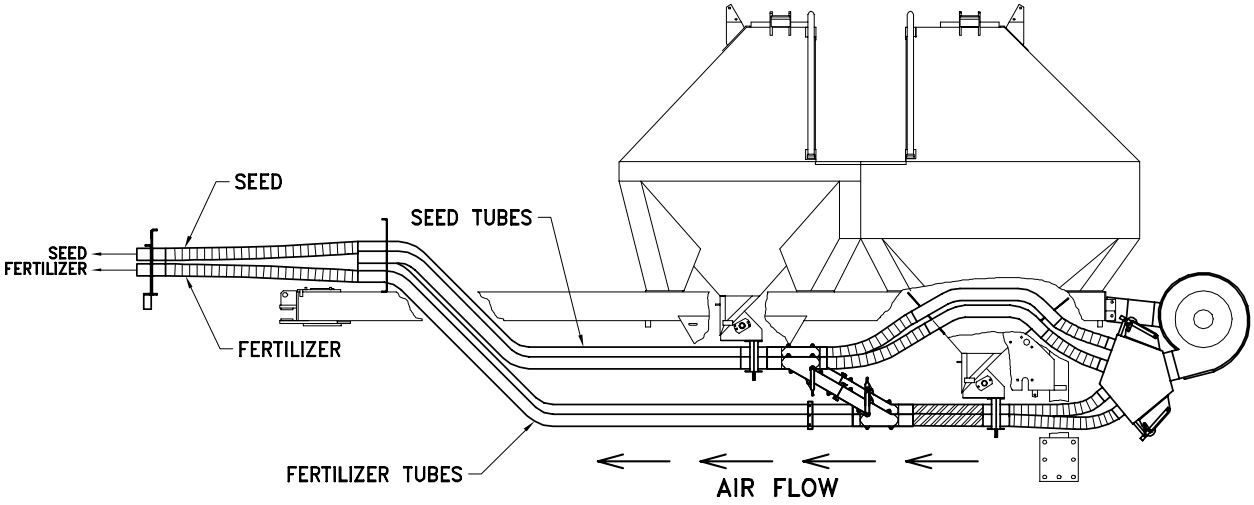

Hitch Stand Kit (Tow Behind)

The hitch stands make hitching and unhitching easier.

Options - continued

Flow Sensors

This option requires the use of Blockage Modules. The Blockage Modules signal the monitor on the loss of flow at any sensor.

Pin Sensor System

Up to 16 blockage modules may be connected, each of which can have up to 12 pin sensors connected, providing a 192 run capability. More information is given in the Monitor Section under *"Flow".*

Optical Sensor System

Up to 12 blockage modules may be connected, each of which can have up to 16 optical sensors connected, providing a 192 run capability. More information is given in the Monitor Section under *"Flow".*

Pin Sensor Shown

Rear Tow Hitch

The Tow Hitch is available only on tow behind models.

The Tow Hitch enables the operator the ability to attach a packer bar or an anhydrous tank behind the Air Cart.

Options - continued

Fertilizer Banding Kit

The fertilizer banding kit joins the two transmissions together, so only the front or rear transmission needs to be set for different rates.

Note: See page 5-34 for rate settings of Fertilizer Banding Kit.

Banding Kit (using rear transmission)

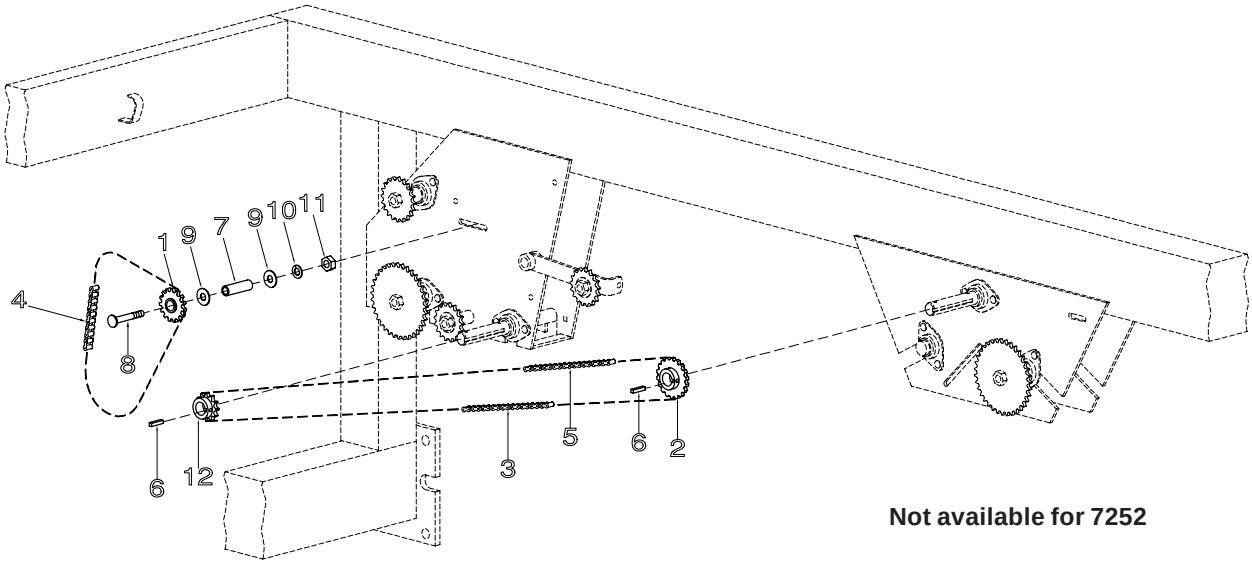

Not available for 7252

Banding Kit (using front transmission)

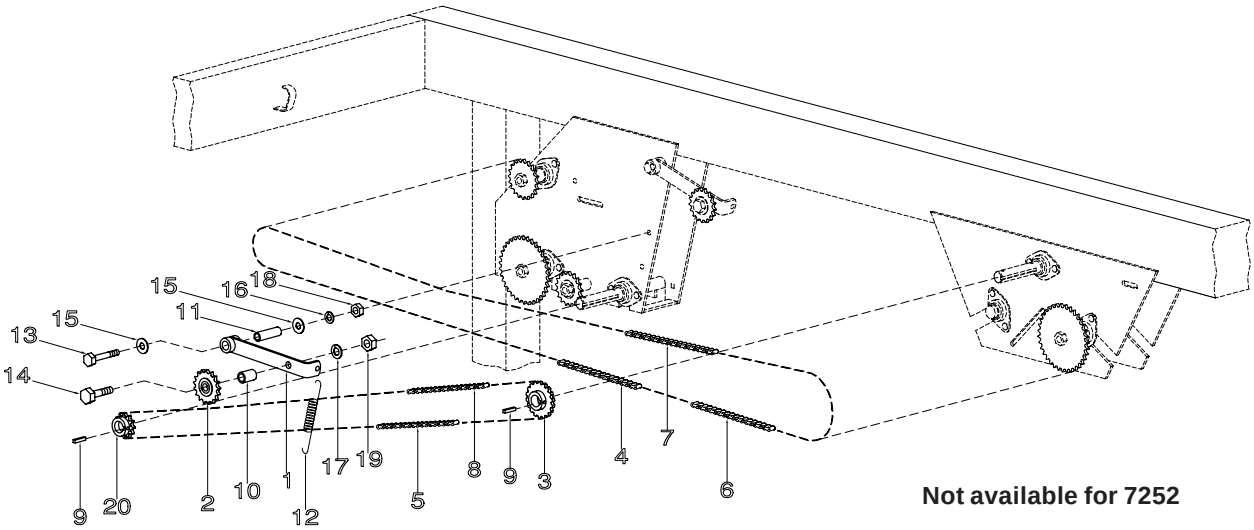

Not available for 7252

Seed Boots

MORRIS offers a variety of Seed Boots for the **7000 Series Air Cart.** Check with your MORRIS Dealer for new additions to the MORRIS seed boot line-up and the application of the seed boots.

Reference Morris Marketing Bulletin #101.

Note: ***For guidelines* see Operation Section under *"Opener Adjustments".***

Collector Plug

The Collector Plug helps reduce the requirement of having to clean the unused ports in the metering body.

- All unused ports must be blanked off using a plastic cap and hose clamp with or without the optional collector plug N28174 shown.

Optional Collector Plug N28174

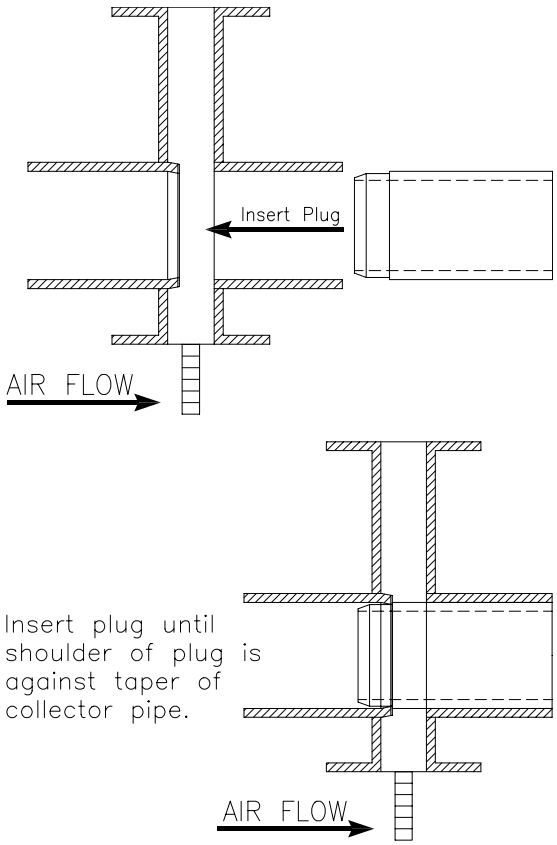

Notes

Section 5: Operation

Section Contents

Application 5-4
Tractor 5-4
  Tires 5-4
  Hydraulics 5-4
  Drawbar 5-4
Hitching 5-5
  Hitching to Tractor (Seeding Tool or Tow Between Cart) 5-5
  Hitching to Seeding Tool (Tow Between Cart) 5-6
  Hitching Tool Bar (Three Point Hitch) 5-6
Hitching Xpress Air Drill 5-7
  Hitching to Seeding Tool (Tow Behind Cart) 5-8
    Hydraulic Connections 5-10
  Unhitching from Tractor (Seeding Tool or Tow Between Cart) 5-11
  Unhitching from Seeding Tool (Tow Between Cart) 5-11
  Unhitching from Seeding Tool (Tow Behind Cart) 5-12
  Unhitching from Tool Bar (Tow Between Cart) 5-13
  Unhitching Xpress Air Drill from Air Cart 5-14
  Unhitching Xpress Air Drill Cart from Tractor 5-15
  Unhitching Xpress Air Drill Combination from Tractor 5-15
Three Point Hitch 5-16
  Rephasing 5-16
Transport 5-17
  Speed 5-17
  Lights 5-17
  Tow Hitch (Tow Behind Units) 5-17
  Disconnect Main Drive Chain: 5-18
Installation of Main Drive Chain 5-18
Metering System 5-19
  Secondary Hose Installation 5-20

Section Contents - continued

Slider Setting 5-21
Filling Tank 5-23
Unloading Tanks 5-27
Complete Clean-out 5-27
Metering Rate Adjustment 5-28
Acre Tally 5-28
Rate Charts 5-29
Spacing Sprocket 5-29
Determining Spacing Sprocket 5-29
Tire Size Sprocket 5-30
Determining Tire Sprocket 5-30
Rate Chart Use 5-31
Extra Low Rates 5-32
Extra High Rates 5-32
Fertilizer Rate Chart: (Rear Transmission) 5-33
Soybeans Rate Chart: (Rear Transmission) 5-34
Seed Rate Chart: (Front Transmission) 5-35
Sunflowers Rate Chart: (Front Transmission) 5-36
Slow Speed Seed Rate Chart: (Front Transmission) 5-37
Fertilizer Rate Chart: (Located on Front Tank of 7252 Only) 5-38
Rate Calibration 5-39
Alternative Rate Calibration 5-40
Imperial Rate Calibration Chart 5-41
7130 and 7180 5-41
7180, 7240, 7252 and 7300 5-42
Seeding Fine Seeds (Canola, Mustard, etc.) 5-43
Applying Inoculant 5-43
Fan Speed Setting 5-44
Hydraulic Fan Drive 5-44
Engine Driven Fan 5-44
Fan Speed 5-45
Double Shoot Settings 5-46
Plenum Damper Settings 5-46
Diverter Settings 5-46
Quick Coupler (Tow Behind Only) 5-46
Double Shoot Tow Behind 5-47
Single Shoot Tow Behind 5-47
Double Shoot Tow Between 5-48
Single Shoot Tow Between 5-48
Fertilizer Banding Kit 5-49
Using Rear Transmission 5-49
Using Front Transmission 5-49
Operating Engine 5-50
Before Starting Engine 5-50
Starting engine 5-50
Hydraulic Fan Drive 5-51

Section Contents - continued

Operating Guidelines 5-52
Check Tire Pressures 5-52
Level Seeding Tool Side to Side 5-52
Level Seeding Tool Front to Rear 5-52
Worn Seeding Tool Parts 5-52
Packing 5-52
Turning 5-53
Seed Rate Settings 5-53
Fertilizer Application 5-53
Fan Setting 5-53
Product Application 5-53
Adjustments and Operational Checks 5-54
Checking Seed Flow 5-54
Moisture Alert 5-54
Air Leaks 5-54
Tank Low in Product 5-54
Monitor 5-55
Opener Adjustments - Double Shoot Boots 5-55
General Field Operation 5-57
Clutch Switches 5-57
Main 5-57
Auxiliary 5-57
Granular 5-57

CAUTION

BE ALERT

SAFETY FIRST

REFER TO SECTION 1 AND REVIEW ALL SAFETY RECOMMENDATIONS.

Application

The Morris 7000 series Air Cart applies a wide range of seed and granular fertilizer products. It has the capacity to single shoot or double shoot. With the addition of the 7000 series Granular Applicator the Morris 7000 series Air Cart can apply granular herbicide or other fine seeds. With the addition of the Third Tank the Morris 7000 series Air Cart can apply seed and starter fertilizer, while deep banding additional fertilizer at the same time.

Tractor

Tires

- Proper ballast and tire pressure are required when pulling heavy implements.
- Consult your tractor operator's manual and follow all recommended procedures.

Hydraulics

- Wipe all hydraulic fittings and couplers with a clean cloth to avoid contaminating the system.
- Check that hydraulic reservoir is filled to the proper level.

Drawbar

- Centre and pin in a fixed position for easier hitching and greater stability.

Warning

Do not permit smoking, sparks or an open flame where combustible fuels are being used. Keep the work area well ventilated.

Warning

Do not search for high pressure hydraulic leaks without hand and face protection. A tiny, almost invisible leak can penetrate skin, that requires immediate medical attention.

Hitching

Caution

A safety chain will help control towed machines should it accidentally separate from the drawbar while transporting. A runaway machine could cause severe injury or death. Use a safety chain with a strength rating equal to or greater than the gross weight of the towed machines.

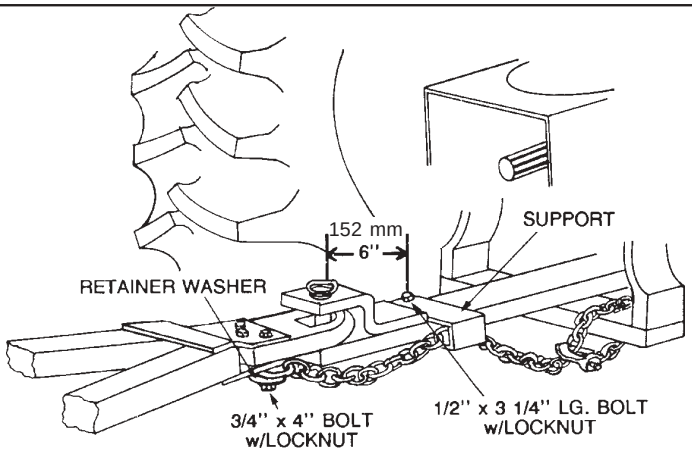

Attach safety chain to the tractor drawbar support or other specified anchor location with the appropriate parts.

Hitching to Tractor (Seeding Tool or Tow Between Cart)

- Ensure swinging drawbar is locked in the centre position.
- Insure hitch pin is in good condition.
- Level clevis with tractor drawbar using hitch jack.
- Back tractor into position and attach hitch clevis to drawbar, using an adequate hitch pin.
- Lock hitch pin in place with a hairpin or other proper locking device.
- After tractor to implement connection is made, relieve pressure off the hitch jack.
- Place hitch jack in raised position.
- Route Safety Chain through chain support and drawbar support.
- Lock safety hook onto chain.

Note: Provide only enough slack in chain to permit turning.

- Ensure hydraulic hose quick couplers are dirt free.
- Inspect all fittings and hoses for leaks and kinks. Repair as necessary
- Connect the hydraulic hoses to the tractor quick couplers.

Caution

Dirt in the hydraulic system could damage O-rings, causing leakage, pressure loss and total system failure.

Hitching to Seeding Tool (Tow Between Cart)

- Connect seed cart to tractor.
- Back seed cart into position, aligning seeding tool hitch with seed cart.
- Attach hitch to seed cart with 1 1/2” x 6 1/2” pin and retain with a 1/4” hair pin.
- Attach Safety Chain to seed cart.

Note: Provide only enough slack in chain to permit turning.

- Connect hydraulic hose quick couplers.
- Connect the primary hose couplers.
- Loop retaining chain around the primary hoses with the secondary hose over the bottom half of the chain.

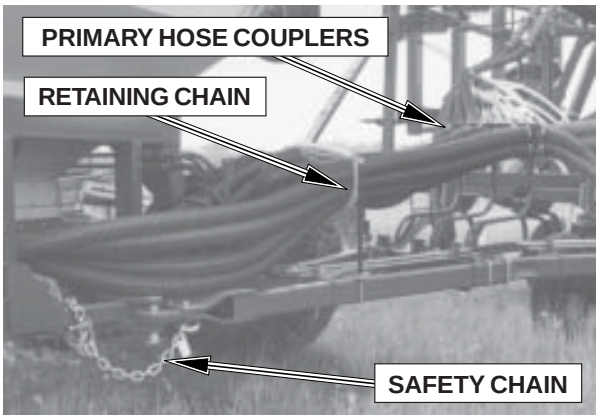

Hitching Tool Bar (Three Point Hitch)

- Connect seed cart to tractor.
- Back seed cart into position, aligning tool bar hitch pins with three point hitch.
- Secure hitch pins to three point hitch clevis with pin lock.
- Secure pin lock with a 1/2” pin and hair pin.
- Attach top link (turnbuckle) to tool bar.
- Connect hydraulic hose quick couplers.
- Connect air hose couplers.

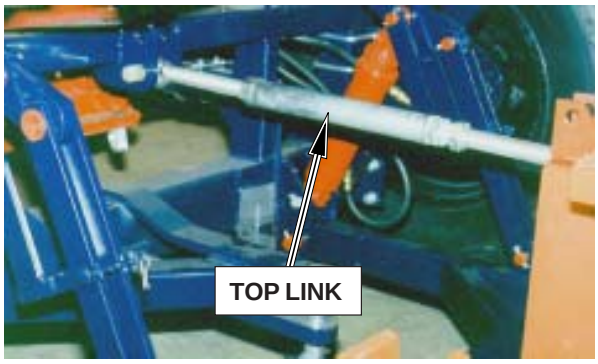

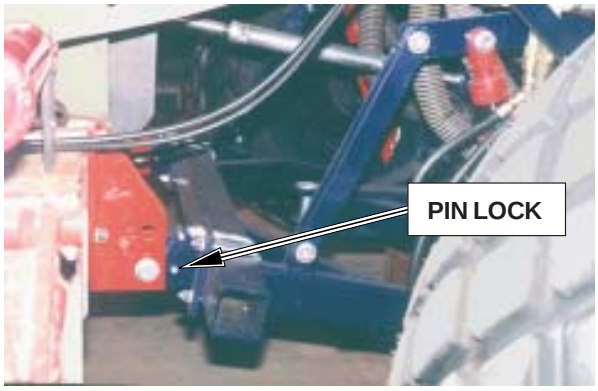

Hitching Xpress Air Drill

- Connect the Air Cart to the tractor.
- Attach Safety Chain to Air Cart.

Note: Provide only enough slack in chain to permit turning.

- Lower the Air Cart 3-point hitch by:
  1) Engage the fan hydraulic circuit valve in the tractor.
  2) Move Selector Valve “A”, located on the front inner RHS Air Cart frame to the “Auger“ position.
  3) Move selector Valve “B” to the “Aux Hyd” position.
  4) Lower 3-point hitch using the bottom hydraulic control valve located at the rear of the Air Cart.
- Back Air Cart into position, aligning Drill Unit hitch with Air Cart 3-point lift arms.
- Partially raise Air Cart 3-point hitch lift arms to fully engage hooks on Drill Unit hitch pins.
- Secure 3-point pin latches with 1/2” x 2 1/4” lg bolts and lock nuts.
- Connect hydraulic hoses matching labelled hoses with identically labelled female hydraulic couplers.
- Connect the air hose coupler to the Drill Unit.
- Connect the saftey light cable from the Drill Unit to the Air Cart.
- Connect the remote clutch switch cable and flow monitoring cable if equipped.
- Fully raise Air Cart 3-point hitch and install 3-point hitch lift cylinder transport locks.
- Rotate parking stand to field position and retain with 1” x 8 3/8” pin and wire lock pin.
- Disengage the fan hydraulic circuit in the tractor cab.
- Disconnect Main Drive Chain on the Air Cart. See Pages 5-8 and 5-9 for details.
- The Air Drill is now ready to transport.

Selector Valves

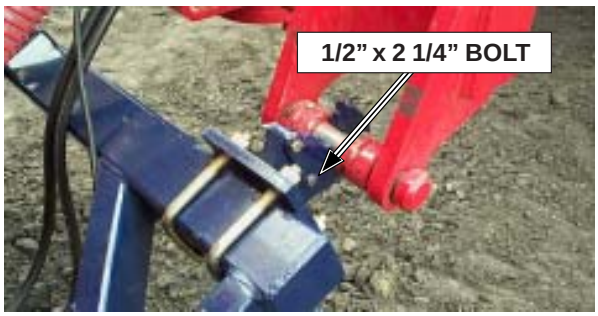

3-Point Hitch

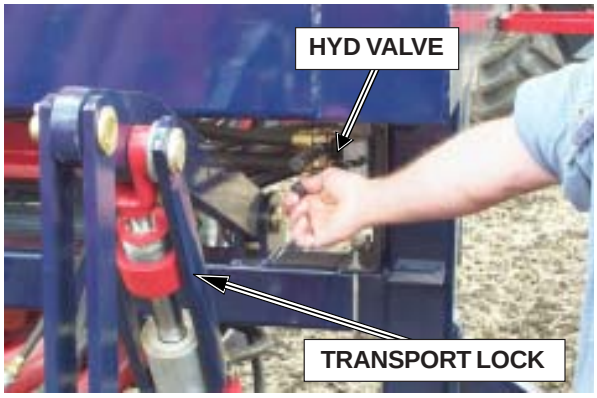

RHS Rear of Air Cart

Hitching to Seeding Tool (Tow Behind Cart)

- Connect seeding tool to tractor.
- Attach hitch to air cart with 1 1/4" x 4" pin.
- Back seeding tool into position with seed cart.
- Extend the telescopic hitch arms and connect the seed cart to seeding tool using 1 1/8" x 3 11/16" pins.
- Block the tires of the seed cart and insert the 1" x 5 13/32" pins into their bushings.
- Slowly back seeding tool toward seed cart until the telescopic arms are fully retracted and the pins drop through the hitch tube locking the hitch poles.
- Retain the pins with Click Pins.
- Attach Safety Chain to seed cart.

Note: Provide only enough slack in chain to permit turning.

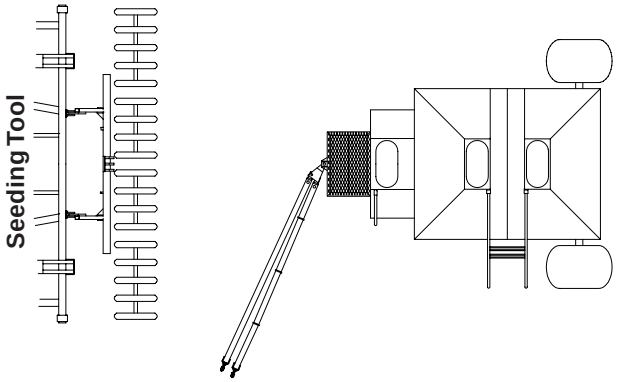

PIN SIZE	
A	1 1/8" x 3 11/16"
B	1 1/4" x 4"
C	1" x 5 13/32"
D	1" x 3 3/4"

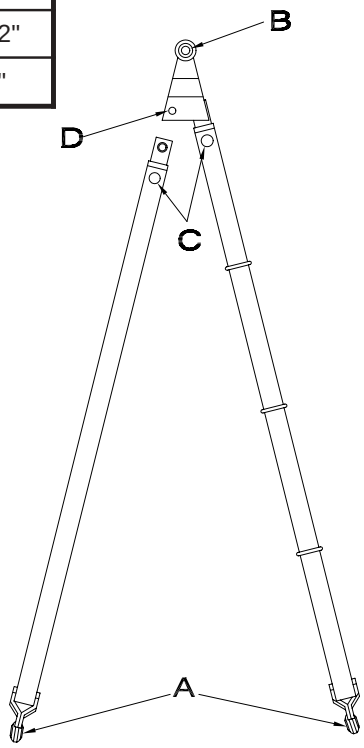

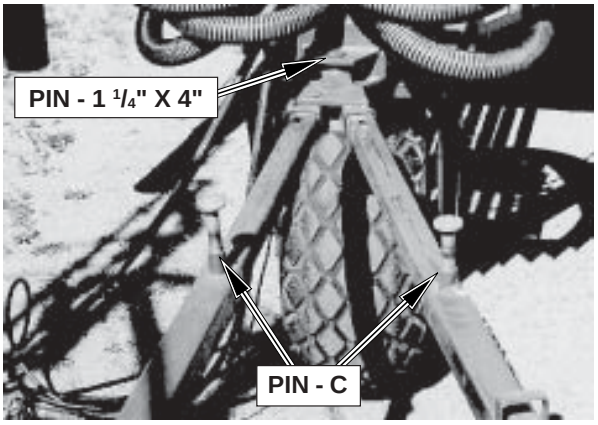

Hitch Extended

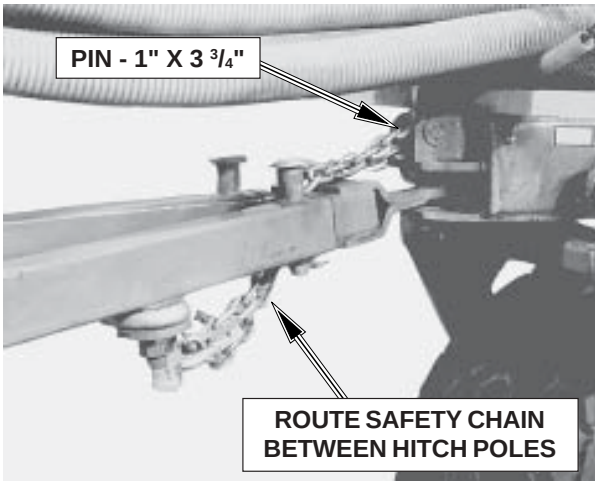

Safety Chain

Hitching to Seeding Tool (Tow Behind Cart) - continued

- Route clutch and monitor wires and hydraulic lines through rear retaining chain with the secondary hose over the bottom half of the chain.
- Route clutch and monitor wires through the loops on the left hand hitch pole.
- Route the hydraulic lines (if any) through the loops on the left hand hitch pole.
- Connect the primary hose couplers.
- Loop retaining chain around the primary hoses with the secondary hose over the bottom half of the chain.
- Connect the monitor and clutch quick connectors at both the tractor/seeding tool and the seeding tool/air cart connections.

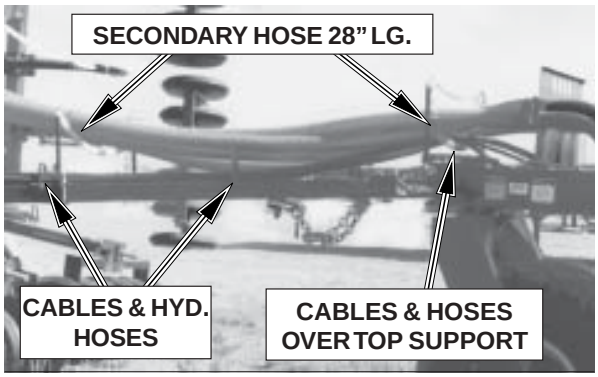

Hoses with correct amount of sag

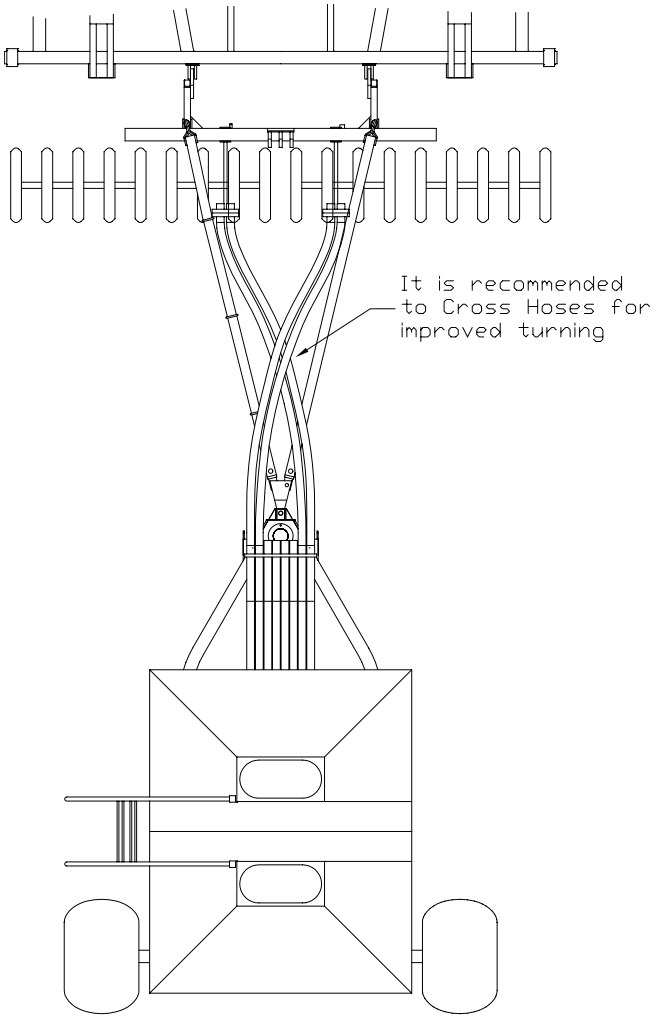

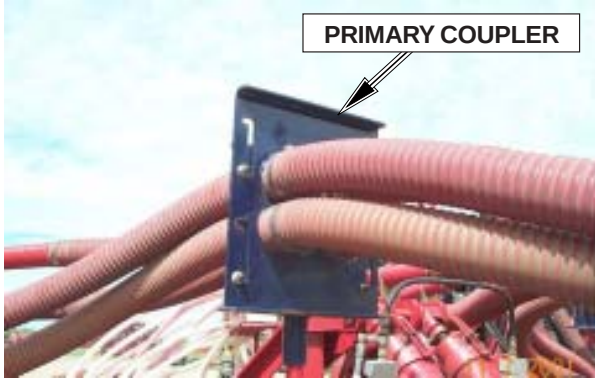

Double Shoot Primary Hose Coupler Shown

Hitching to Seeding Tool (Tow Behind Cart) - continued

Hydraulic Connections

- Connect the monitor and clutch quick connectors at both the tractor/seeding tool and the seeding tool/air cart connections.
- **If hydraulic fan drive,** then connect the fan hydraulic quick couplers at both the tractor/seeding tool and the seeding tool/air cart connections. Ensure couplers are clean and dirt free.
- **If engine fan drive,** then connect the auger quick couplers (if unit is so equipped) at both the tractor/seeding tool and the seeding tool/air cart connections. Ensure couplers are clean and dirt free.

Seeding Tool Coupling

CAUTION

Hydraulic oil under pressure can penetrate the skin causing serious injury. Avoid personal injury by relieving all pressure, before disconnecting hydraulic hoses.

Note: The 3/8" (10 mm) diameter hose must be run directly into the hydraulic tank otherwise damage will occur to the seal in the motor. If the hose is run through the filler cap then ensure the cap is *VENTED*. A quick coupler can still be used between the tractor and the seeding tool.

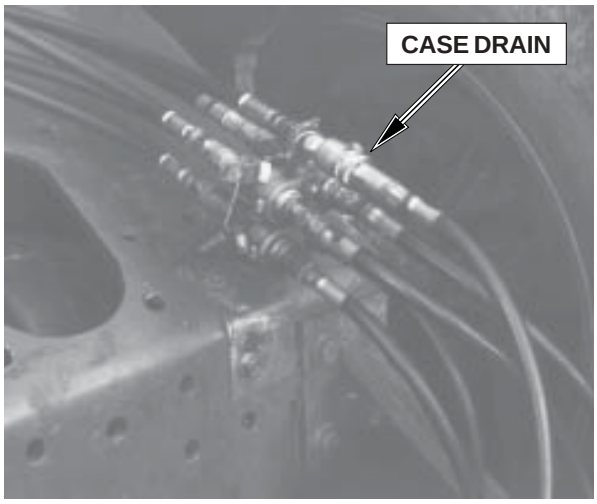

Hydraulic Coupling on Tractor

Unhitching from Tractor (Seeding Tool or Tow Between Cart)

- Pin hitch jack in storage position.
- Lower hitch jack taking the weight off the air cart clevis.

Note: For added Safety it is recommended to unload any material that may be in the tanks.

- Ensure all transport locks are properly secured. Refer to seeding tool manual for more details.
- Relieve pressure in the hydraulic hoses by positioning tractor hydraulic lever in “float” position or turn tractor engine off and cycle lever back and forth several times.
- Disconnect the hydraulic hoses.
- Disconnect the clutch and monitor cables.
- Remove the safety chain.
- Remove the drawbar pin.
- Slowly move tractor away from seeding tool or tow between cart.

Tow Between Cart

Unhitching from Seeding Tool (Tow Between Cart)

- Lower hitch jack taking the weight off the seeding tool hitch poles.
- Relieve pressure in the hydraulic hoses by positioning tractor hydraulic lever in “float” position or turn tractor engine off and cycle lever back and forth several times.
- Disconnect the primary hose couplers.
- Disconnect the hydraulic hoses.
- Remove the hitch pin.
- Slowly move seed cart away from seeding tool.

Tow Between Cart

Unhitching from Seeding Tool (Tow Behind Cart)

- Lower hitch stands, if so equipped, taking the weight off the hitch poles.
- Relieve pressure in the hydraulic hoses by positioning tractor hydraulic lever in “float” position or turn tractor engine off and cycle lever back and forth several times.
- Disconnect the primary hose couplers.
- Disconnect the hydraulic hoses.
- Disconnect the clutch and monitor cables.
- Remove the hitch pins.
- Move hitch poles to the side of seed cart, if not equipped with hitch stands.
- Slowly move seeding tool away from seed cart.

Seeding Tool Coupling

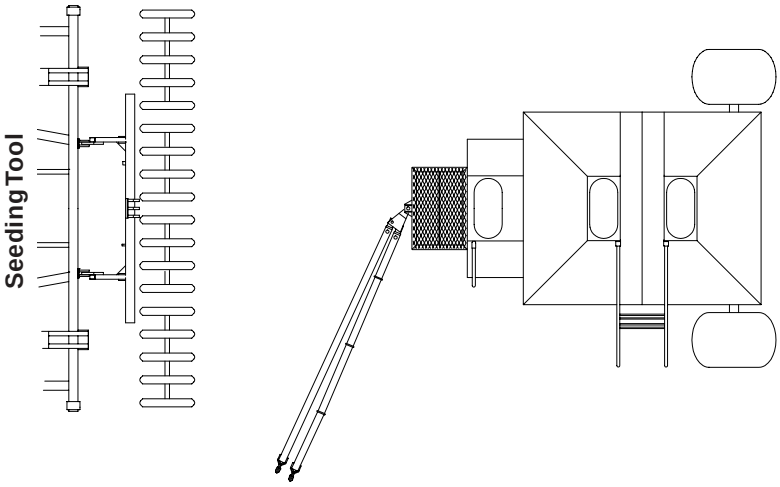

Unhitching from Tool Bar (Tow Between Cart)

- Lower toolbar stands to desired position.
- Lower toolbar enough to remove weight from the tool bar hitch pins.
- Disconnect air hose couplers.
- Disconnect top link (turnbuckle).
- Remove 1/2” pin from pin lock, freeing toolbar hitch pins.
- Lower three point hitch until toolbar hitch pins are clear.
- Relieve pressure in the hydraulic hoses by positioning tractor hydraulic lever in “float” position or turn tractor engine off and cycle lever back and forth several times.
- Disconnect the hydraulic hoses.
- Slowly move seed cart away from toolbar.

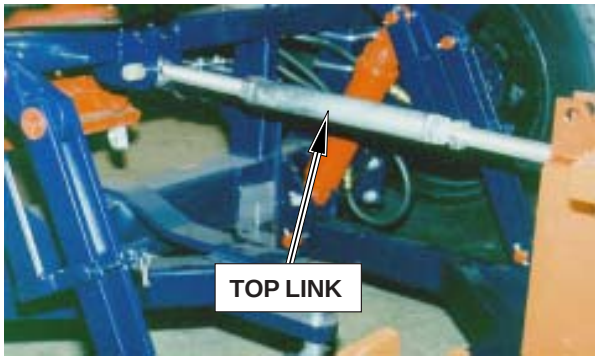

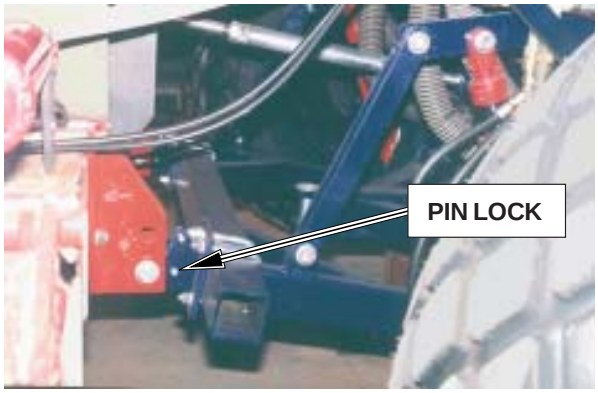

Unhitching Xpress Air Drill from Air Cart

DRILL UNIT MUST BE DISCONNECTED FROM THE AIR CART ON LEVEL GROUND.

- Refer to the Drill Unit Operator's manual for the correct procedure for placing the drill into transport position.
- Raise the 3-point hitch fully by:
  1) Engage the fan hydraulic circuit valve in the tractor.
  2) Move Selector Valve "A" to the "Auger " position.
  3) Move selector Valve "B" to the "Aux Hyd" position.
  4) Raise the 3-point hitch using the lower control valve located at the rear of the Air Cart.
- Lower parking stand on the Drill Unit and lock with the 1 inch pin provided.
- Disengage the 3-point pin latches and fully lower the 3-point hitch using the bottom hydraulic valve body on the rear of the Air Cart, labelled 3pt hitch.
- Relieve pressure in the hydraulic hoses by:
  1) Positioning tractor hydraulic levers in "float" position or turn tractor engine off and cycle lever back and forth several times.
  2) Cycle hydraulic valve levers at the rear of the Air Cart back and forth several times.
- Disconnect the hydraulic hoses.
- Disconnect the remote clutch switch cable and flow monitoring cable if equipped.
- Disconnect the primary hose coupler.
- Slowly move seed cart away from the Drill Unit.
- Engage tractor hydraulic lever operating the fan circuit.
- Raise Air Cart 3-point hitch and install transport locks on the 3-point hitch cylinders.
- Move Selector Valve "A" to the "Fan" position.
- Disengage the fan hydraulic circuit in the tractor cab.

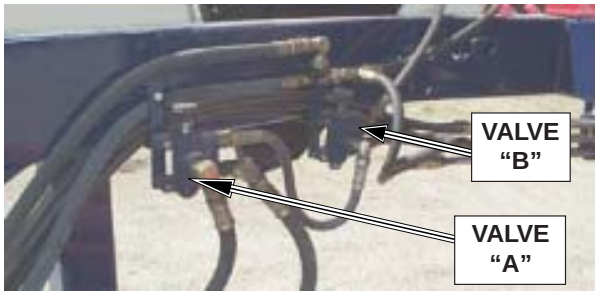

Selector Valves

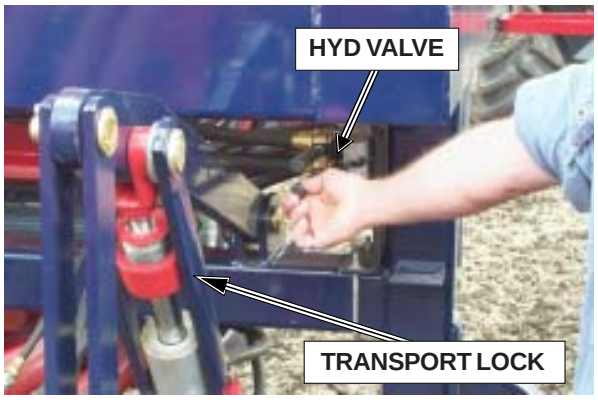

Rear of Air Cart

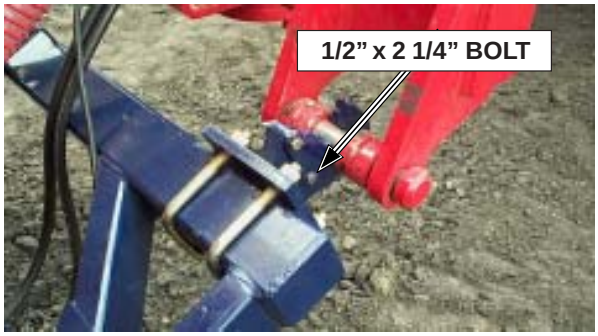

3-Point Hitch

Unhitching Xpress Air Drill Cart from Tractor

- Unpin Air Cart hitch jack from its storage position and place into work position.
- Lower the hitch jack taking the weight off the air cart clevis.

Note: For added Safety it is recommended to unload any material that may be in the tanks and park on level ground.

- Relieve pressure in the hydraulic hoses by positioning tractor hydraulic lever in “float” position or turn tractor engine off and cycle lever back and forth several times.
- Disconnect the hydraulic hoses.
- Disconnect the clutch, safety light and monitor cables.
- Remove the safety chain.
- Remove the drawbar pin.

Air Cart Hitch

Unhitching Xpress Air Drill Combination from Tractor

Refer to the Drill Unit Operator’s manual for the correct procedure for folding the drill into transport position.

This same procedure for unhitching applies if the drill remains in field position.

- Raise the 3-point hitch fully by:

1) Engage the fan hydraulic circuit valve in the tractor.
2) Move Selector Valve “A” to the “Auger “ position.
3) Move selector Valve “B” to the “Aux Hyd” position.
4) Raise the 3-point hitch using the lower control valve located at the rear of the Air Cart.

- Lower parking stand on the Drill Unit and lock with the 1 inch pin provided.
- Lower the 3-point hitch until the weight is taken off the 3-point hitch mechanism.

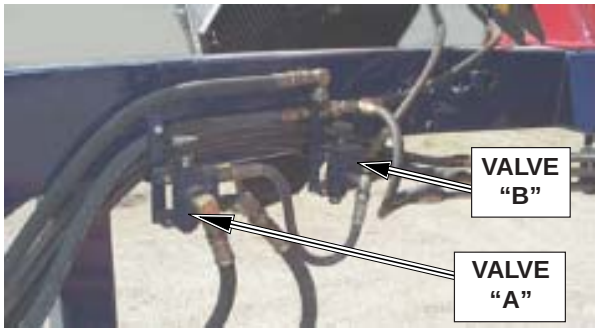

Selector Valves

Unhitching Xpress Air Drill Combination from Tractor - Continued

- Relieve pressure in the hydraulic lines by positioning the tractor hydraulic levers in “float” position or turn tractor engine off and cycle levers back and forth several times.
- Remove Air Cart hitch jack from its storage position and place into work position.
- Lower the hitch jack taking the weight off the air cart clevis.

Note: For added Safety it is recommended to unload any material that may be in the tanks and park on level ground.

- Disconnect the hydraulic hoses.
- Disconnect the clutch, safety light and monitor cables.
- Remove the safety chain.
- Remove the drawbar pin.
- Slowly move tractor away from the Air Cart.

Caution

Folding Drill hitch must support weight of folding drill.

Three Point Hitch

- Secure transport locks in field position.
- Lower tool bar into ground to desired working depth.
- Level tool bar front to back with top link (turn buckle).
- Adjust cylinder stroke control collars once desired working depth is attained.

Rephasing

- Raise machine fully, holding hydraulic lever for several seconds to phase the system.
- This will equalize system pressure, cylinder stroke, and synchronize cylinders.
- **It is recommended that the unit be rephased at each turn on the headland.**

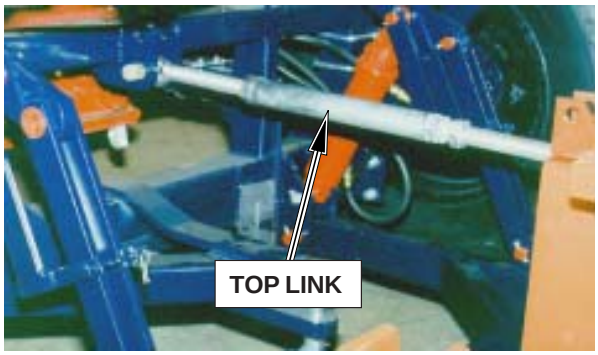

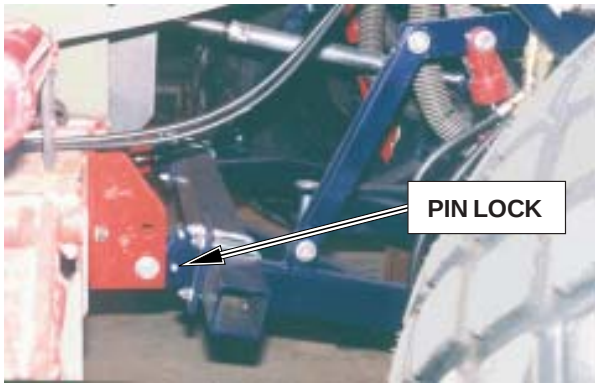

Transport

Observe all applicable safety precautions under transport heading in Safety, Section 1.

- Refer to Specifications, Section 2 for weight, transport height and width.
- Transport with tractor only!
- Use Tow Hitch when transporting without seeding tool. (Tow Behind Units)
- Always connect safety chain provided to the towing vehicle and the hitch of the seed cart.
- Do not transport with the fan running.
- Disconnect main drive chain when towing air cart a long distance.
- Ensure all transport pins are secured.

Speed

- Always travel at a safe speed. Do Not Exceed 20 M.P.H. (32 kph) with an empty air cart.
- The combined weight of the implements being towed, including material in tank, ***must not exceed 1.5 times*** the weight of towing vehicle.
- **REDUCE SPEED** with material in tank. **Do Not** Exceed a speed of 10 M.P.H. (16 kph).
- Use additional caution when towing loads under adverse surface conditions, when turning, and on inclines.

Lights

- Ensure proper reflectors are in place, refer to Safety Section 1.
- Be familiar with and adhere to local laws.

Tow Hitch (Tow Behind Units)

- Attach tow hitch to front axle with two 1” x 2 1/4” pins.
- Retain the pins with klik-pins.
- Use tow hitch when towing without seeding tool.
- **Do not** use transport hitch with material in tank.
- **Do not install transport lock pin in front castor fork when using tow hitch.**

MORRIS INDUSTRIES LTD. WILL NOT BE RESPONSIBLE FOR ANY DAMAGES OR OPERATOR INJURY RESULTING FROM NON-USE OR IMPROPER USE OF TRANSPORT LOCKS.

Important

When the machines are being towed by a semi tractor or trucks of any description, the units HAVE to be towed separately from seeding tool with tow hitch provided.

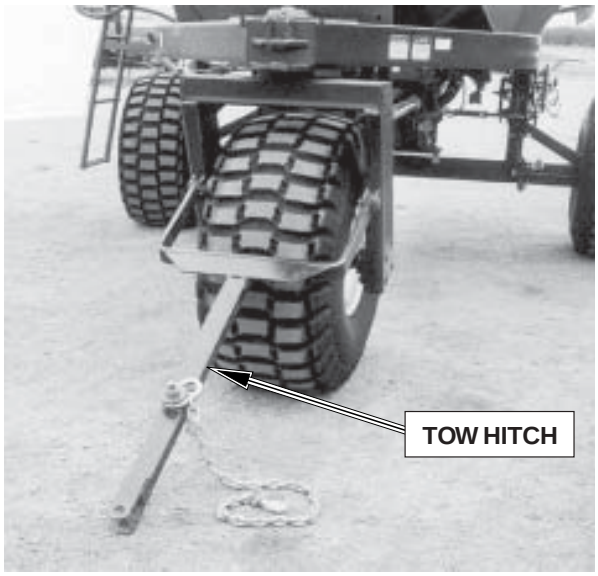

Tow Hitch

Important

DO NOT EXCEED 20 M.P.H. (32 kph)

The front castor tire will contact the mud scraper if towing speeds exceed 20 M.P.H. (32 kph) causing severe damage to the tire and mud scraper.

Transport - Continued

Disconnect Main Drive Chain:

When travelling any distance the drive chain should be removed to prevent premature wear on the drive.

- Remove spring from the bottom idler.
- Remove chain from the jackshaft.
- Insert end of spring through the chain and hook other end of spring to the top idler as shown.

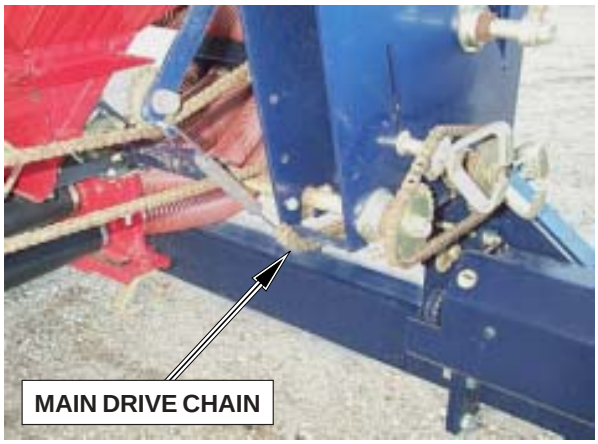

Installation of Main Drive Chain

- Unhook idler spring.
- Position chain on the jackshaft and idler sprockets as shown.
- Connect idler spring to transmission brace with idlers as shown.

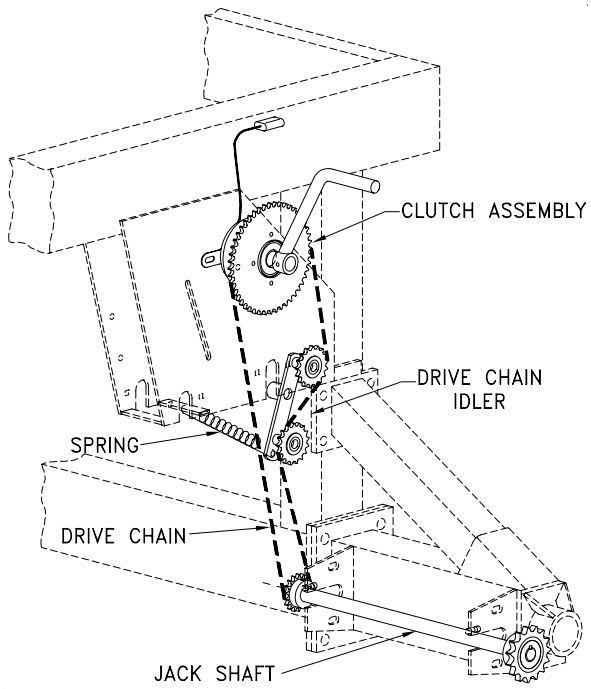

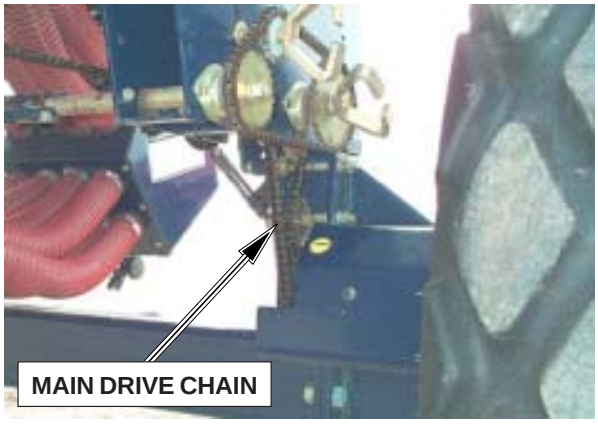

Metering System

The 7000 Series Air Cart uses a combination of metering wheels and spacers shown below. The metering wheel is individually sized to correspond to the number of outlets at the connected secondary head and the spacers make up the space between the wheel and the body. Some openings may be blanked off depending on the number of secondary divider heads used on the seeding tool.

The 7000 Series Air Cart can meter all types of seeds and fertilizers by simply adjusting the slider plates. See *"Slider Settings"* for more details.

Different rates are easily obtained using the selection of quick change sprockets that attach to either of the two meter transmissions.

Note: Before putting product into the tanks check the following:

(a) The slider plates are set correctly for product being applied.

(b) The Clean-out doors are fully closed and sealed.

(c) The plastic bag covering the fan is removed.

Important

Ensure distribution system is balanced. It is very important that head outlets only vary by one . (i.e. use only 7 and 8 together, 8 and 9 together, 9 and 10 together)

Note: The number of outlets on the divider head must match the metering wheel size.

10 Outlet Head

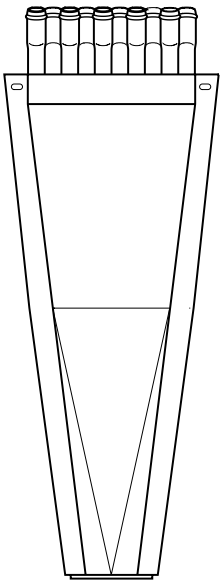

10 Outlet Metering Wheel with no spacer.

9 Outlet Head

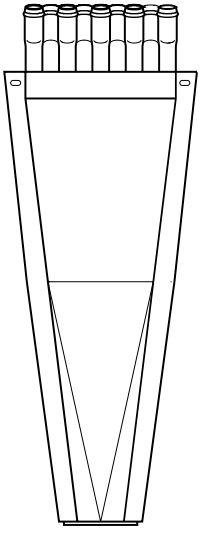

9 Outlet Metering Wheel with a single spacer.

8 Outlet Head

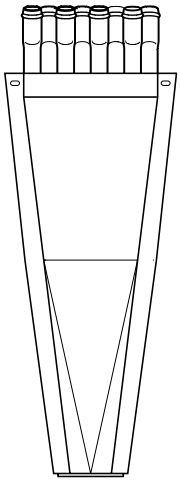

8 Outlet Metering Wheel with two single spacers.

7 Outlet Head

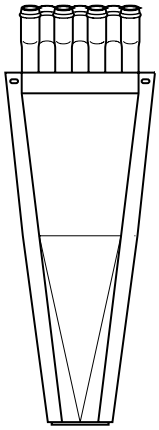

7 Outlet Metering Wheel with a single and one double spacer.

Metering System - Continued

Secondary Hose Installation

The lengths of the 15/16” (24 mm) diameter hoses are **very important.**

For Accurate distribution the secondary hoses have to be arranged by length symmetrically about the centre line.

The **longest** hoses **have to be** in the **centre** of the divider head. These hoses would normally feed the openers furthest away from the head.

- Ensure that the secondary hoses 15/16” (24 mm) diameter do not run higher than 3” (76 mm) above the height of the flat fan divider head.
- Allow an extra 3” (76 mm) of hose before cutting secondary hose for fitting in the seed boot.
- Always ensure that the secondary hoses are sufficiently long to accommodate tripping of trips.
- **Avoid sharp bends** in any of the hoses.
- Check for pinch points and clearances when folding in and out of transport.

Important

Hot water is the only acceptable lubricant for the installation of the secondary hose.

The supplier advised MORRIS that WD-40 or any other lubricant (i.e. liquid detergent) will have a negative effect on the chemical stability of the hose, resulting in the degradation and failure of the hose due to Environmental Stress Cracking.

Important

Distribution uniformity will be adversely affected if hoses are incorrectly installed.

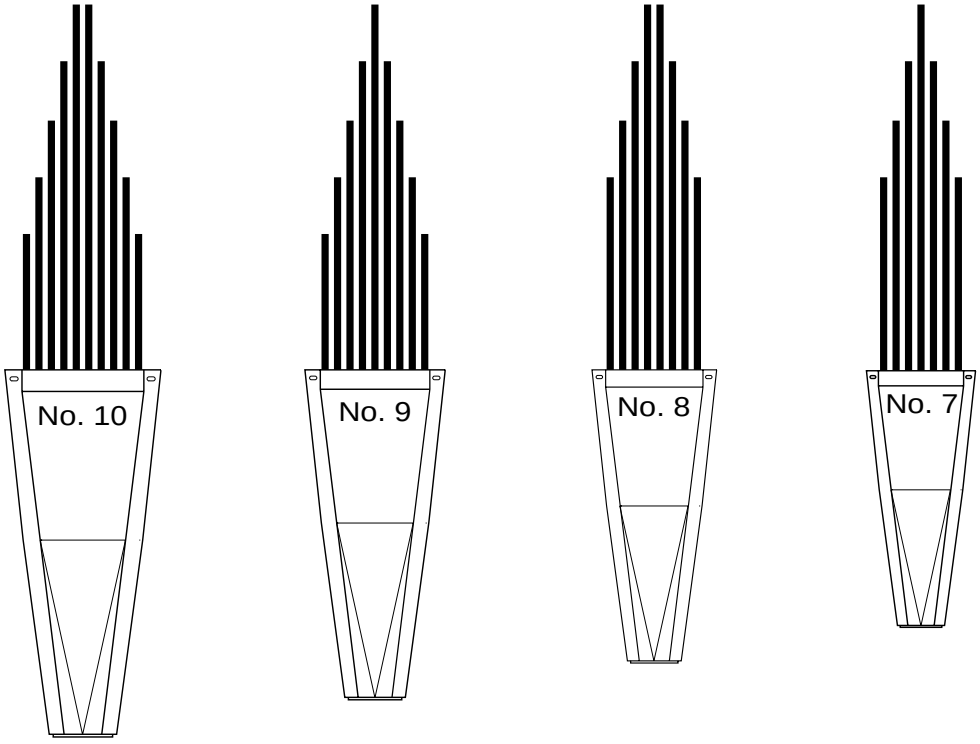

Slider Setting

The slider plates come in 4 different sizes. Each slider plate matches a specific metering wheel.

Note: The slider plates must match the metering wheel size.

The slider plates have three positions to allow all types of seeds and fertilizers to be metered.

The slider plate positions are **closed, open,** and **removed** as indicated on diagrams. (See next page)

- Position slider as indicated below and tighten nut to hold slider tightly in place.
- Position cover plate as indicated below and tighten wing nuts to hold cover plate in place.

Note: For Oats or Coarse Grains, if it appears bridging is occurring, remove sliders and recalibrate.

Important

When adjusting the sliders to the closed position follow the procedures below:

1) Locate the key-way in the metering wheel. Rotate shaft until high spot is located, this is the key-way location. Mark shaft for future reference.
2) Rotate metering shaft until key-way is in location shown below.
3) Keep the slider mounting plate flat on the metering body surface. See diagram A.

If the slider is tipped up when set to the closed position interference with the metering wheel will occur.

Note: In the closed position there is a gap of .070" (1.778 mm) between the metering wheel and the top edge of the slider plate.

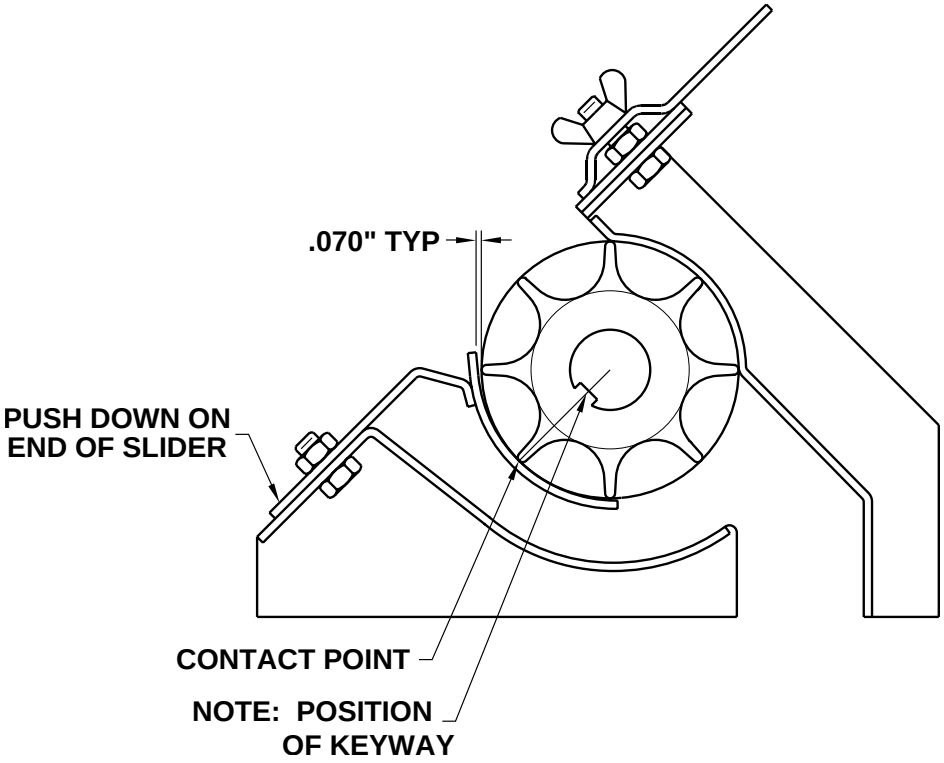

Slider Setting - Continued

A **Slider Closed & Cover Plate Down**

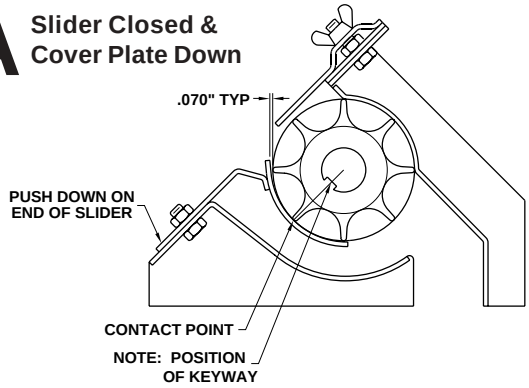

B **Slider Closed & Cover Plate Up**

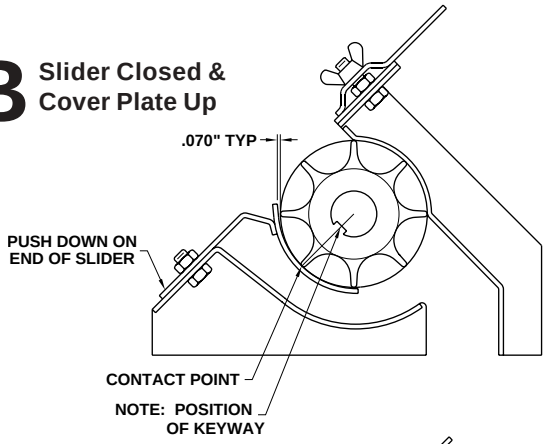

C **Slider Open & Cover Plate Up**

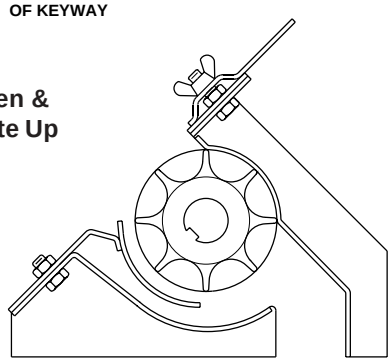

D **Slider Removed & Cover Plate Up**

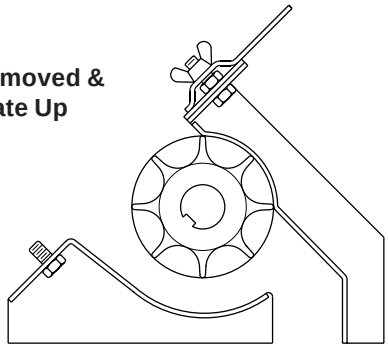

Note: For Oats or Coarse Grains, if it appears bridging is occurring, remove sliders and recalibrate.

Slider Setting Chart

Diagram	Product	Slider Setting	Cover Plate
A	Canola Flax Mustard	Closed	Down
B	Nitragin Nodulator	Closed	Up
C	Barley Lentils Milo Oats Rice Wheat Fine Fertilizer	Open	Up
D	Beans Peas Soybeans Sunflowers 10-46-0-0 11-51-0 Fertilizers containing Sulphur and/or Potash	Removed	Up

Filling Tank

The Morris 7000 Series Air Cart is equipped with 2 tanks. The front tank is for seed and the rear tank is for fertilizer. However, BOTH tanks can be used for the same product.

The capacity of the Air Cart Tanks are as follows:

Tank Capacity				
Model	Front Tank	Middle Tank	Rear Tank	Total Capacity
7130	48 bushels 3,456 lbs. 62 ft. cu. 1,750 L	N/A	82 bushels 5,904 lbs. 105 ft. cu. 2,980 L	130 bushels 167 ft. cu. 4,730 L
7180	71 bushels 5,112 lbs. 91 ft. cu. 2,580 L	N/A	109 bushels 7,848 lbs. 140 ft. cu. 3,970 L	180 bushels 231 ft. cu. 6,550 L
7240	95 bushels 6,840 lbs. 122 ft. cu. 3,460 L	N/A	145 bushels 10,440 lbs. 186 ft. cu. 5,270 L	240 bushels 308 ft. cu. 8,730 L
7252	71.3 bushels 5,134 lbs. 91.4 ft. cu. 2,590 L	71.3 bushels 5,134 lbs. 91.4 ft. cu. 2,590 L	109.3 bushels 7,881 lbs. 140.6 ft. cu. 3,990 L	252 bushels 323.4 ft. cu. 9,170 L
7300	120 bushels 8,640 lbs. 154 ft. cu. 4,360 L	N/A	180 bushels 12,960 lbs. 231 ft. cu. 6,550 L	300 bushels 385 ft. cu. 10,910L

- Open lid fully on tank being filled.
- Check and remove any debris inside tank.
- Remove clean-out door.
- Check for debris inside metering body.
- Check for sheared metering wheels.
- Check the slider plates are set correctly.
- Fully close and seal the Clean-out door.
- Ensure the auger screen is in place.
- Always use screen to filter debris when filling.
- Adjust bin level sensor to desired alarm point.

Note: Even small fertilizer lumps can cause problems with plugging. All possible precautions should be taken to prevent lumpy fertilizer from entering the tank.

Important

Before putting product into the tanks check the following:

(a) The slider plates are set correctly for product being applied.

(b) The clean-out doors are fully closed and sealed.

(c) The plastic bag covering the fan is removed.

(d) Inspect all augers used in handling the products for seeding. Run augers to clean out any debris inside auger so it does not get transferred to air cart tanks.

Tank Lids

⚠ Warning

Do not enter tank unless another person is present.

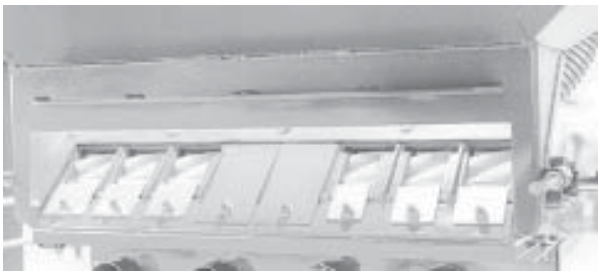

Inspect Metering Body

Filling Tank - Continued

- Position right hand access ladder in line with the tank walkway.
- Position auger as described below, if so equipped.
- Unlock auger arm lock. (Located 7240, 7252 & 7300 only)
- Unlatch the auger from its transport position.
- Swing out the auger making sure the motor end of the auger is still engaged at the arm pivot.
- Once the auger pivot is central to the Air Cart, tilt auger and swing into position with spout centrally located over the walkway.
- Lock auger arm lock. (Located 7240, 7252 & 7300 only)

Important

Check Metering Wheel keyways in the event the primary lines plug.

Keyways may shear if the collector becomes pluged.

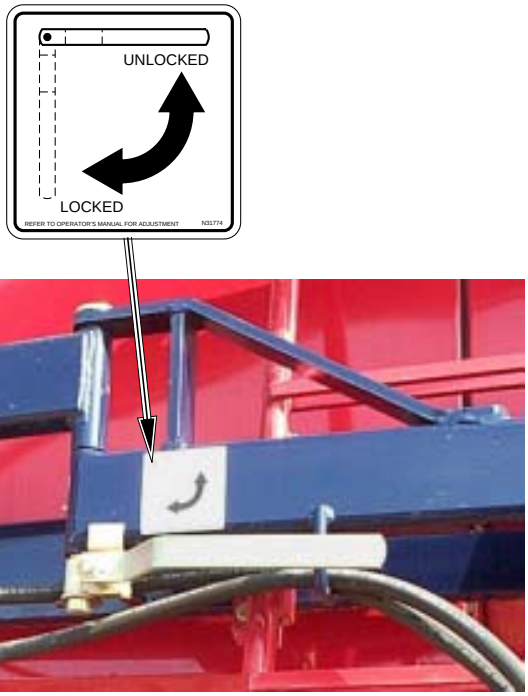

Auger Arm Lock

Auger Cradle

Front Pivot

Filling Tank - Continued

- Open lids on tank and insert spout.
- Back truck to the hopper and engage the hydraulic motor on the auger.
  1. If hydraulic fan drive then ensure selector valve is in correct position for auger operation and engage tractor hydraulics.
  2. If engine fan drive then engage tractor hydraulics to operate auger.
- Auger product into tank until product is visible in site glass.
- Stop the flow of product into the auger and allow auger to empty. The tank should be close to full.

Auger Positioned

Important

Do not exceed 10 mph (16 kph) with tanks full.

Site Glass

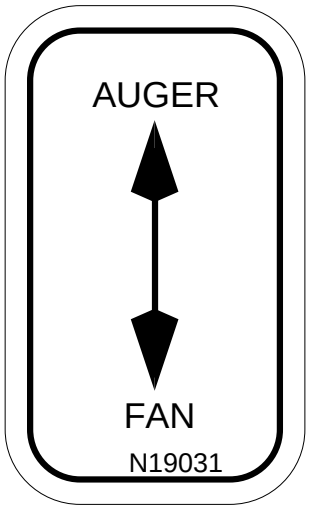

Selector Valve

Filling Tank - Continued

- Clean lid seal and ensure lid seal is positioned correctly before closing tank lid.
- Reverse the auger to clean out the hopper, screen maybe removed for easier cleanout.
- Reinstall auger screen.
- Unlock auger arm lock. (Located 7240, 7252 & 7300 only)
- Swing auger out making sure the motor end of the auger engages the arm pivot.
- Secure auger in transport position.
- Lock auger arm lock. (Located 7240, 7252 & 7300 only)
- Remove the plastic bag covering fan.
- Check lid for air leaks with your hands once Air Cart fan is operational. See Section 7
- Check metering body for air leaks.

Danger

ROTATING FLIGHTING HAZARD

Keep away from auger intake.

Keep intake shield in place and in good working order. Do not modify.

FAILURE TO HEED WILL RESULT IN SERIOUS INJURY OR DEATH.

Note: Before seeding it is recommended that after a rain or dew that fan be run for a few minutes to eliminate moisture in the system.

Auger screen removed

Auger screen installed

Auger Cradle

Unloading Tanks

Emptying tanks is quick and easy to do.

- Move access ladder forward.
- Position auger under the tank to be emptied.
- Start auger.
- Loosen Clean-out door on metering body.
- Regulate flow from the tank by loosening or tightening Clean-out door as required.
- Once all material stops flowing, remove Clean-out door completely and brush out remaining material in the corners.

Complete Clean-out

- Remove all sliders and blank off plates.
- Remove the collector bottom.
- Run fan until all remaining material has been blown out of the system.
- Reinstall the sliders, blank off plates, collector bottom, and clean-out doors.

⚠ Danger

Keep all shields in place. Keep hands, feet and clothing away from auger intake, failure to do so will result in serious injury or death.

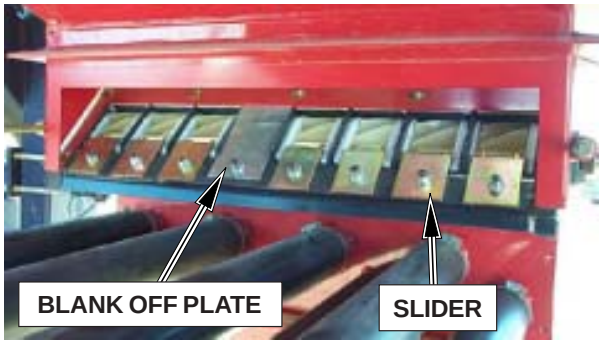

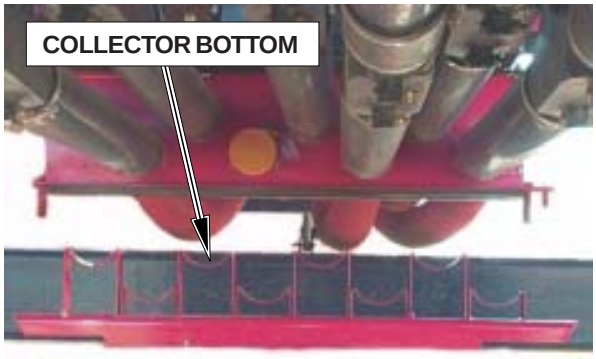

Metering Rate Adjustment

The metering rate adjustment for both tanks is done in the same manner. The rate varies with the speed of the metering wheels. A new rate is achieved by changing a sprocket on the Posi-Drive Transmission.

Refer to the rate charts for desired application rate and sprocket selection.

- Loosen metering chain on posi-drive transmission, by loosening the idler.
- Spin off wing nut and remove rate change sprocket.
- Install desired rate change sprocket and tighten wing nut.
- Tighten chain by adjusting idler.

Note: Do not over tighten chain, just take slack out of chain.

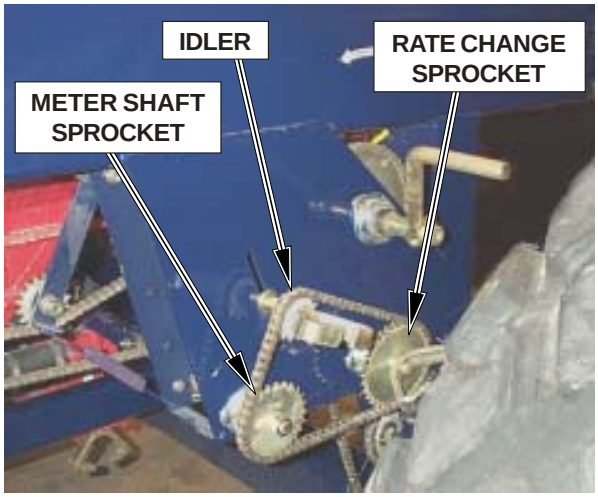

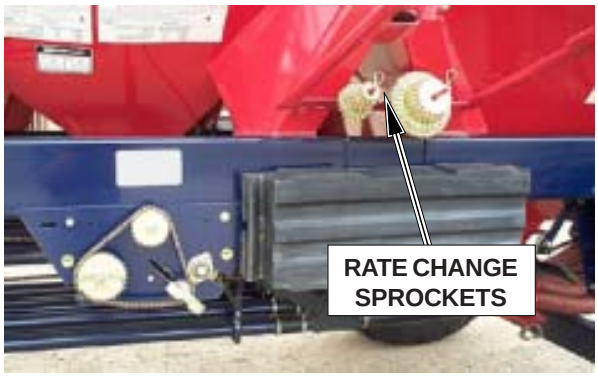

Acre Tally

To convert the acre tally reading (T) into the actual acres seeded turn to page 5-41 (page 11-2 for metric) to get the acre tally factor (F) for the Air Cart/Seeding Tool width being used. Take the acre tally reading (T) and multiply it by the acre tally factor (F) to get the actual acres seeded.

T x F = Actual Acres Seeded

Example: A 7180 with a 41 foot (12.5 m) seeding tool has an acre tally reading (T) of 100. The acre tally factor (F) on Page 5-41 is 4.94 for acres or Page 11-2 is 2.00 for hectares.

T x F = Actual Acres Seeded

100 x 4.94 = 494 Acres

100 x 2.00 = 200 hectares

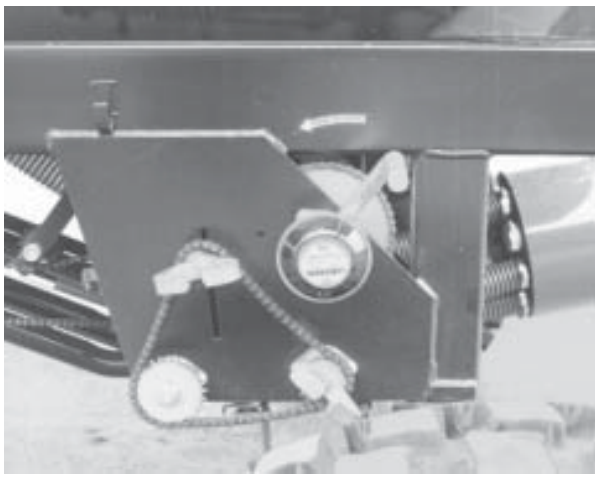

Acre Tally

Rate Charts

Spacing Sprocket

The rate chart applies to all spacings listed below.

Check that the correct spacing sprocket is installed on your machine. This sprocket is located on the inner side of the rear transmission on the clutch output shaft.

The spacing sprocket must be matched to the seeding tool trip spacing.

Determining Spacing Sprocket

To determine spacing sprocket for other spacings not listed in the chart use the following equation:

$$\text{New Spacing Sprocket} = \left(\frac{\text{New Spacing}}{12''}\right) \times 20$$

$$\text{New Spacing Sprocket} = \left(\frac{\text{New Spacing}}{304.8\ \text{mm}}\right) \times 20$$

The rate charts and drive rates are all based upon 12”(305 mm) spacing - 20 tooth sprocket.

Note: Due to ratios of spacing the value may not be a whole number and should be rounded to nearest value.

Note: Incorrect spacing sprocket will cause inaccurate application rates.

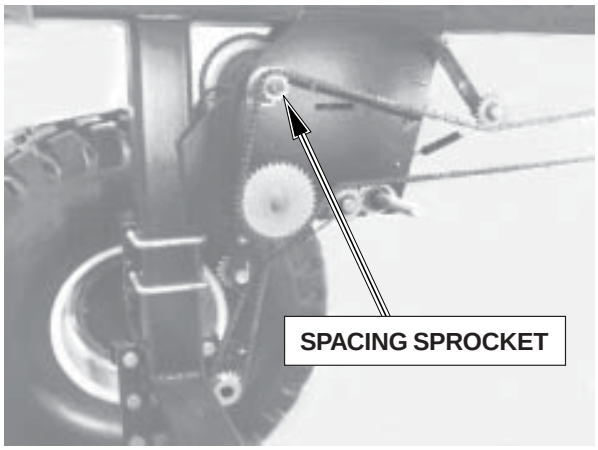

Spacing Sprocket

Spacing Sprocket	
Opener Spacing	**Spacing Sprocket**
7.2" (183 mm)	12 teeth
7.5" (191 mm)	12 teeth
8" (203 mm)	13 teeth
9" (229 mm)	15 teeth
10" (254 mm)	17 teeth
12" (305 mm)	20 teeth

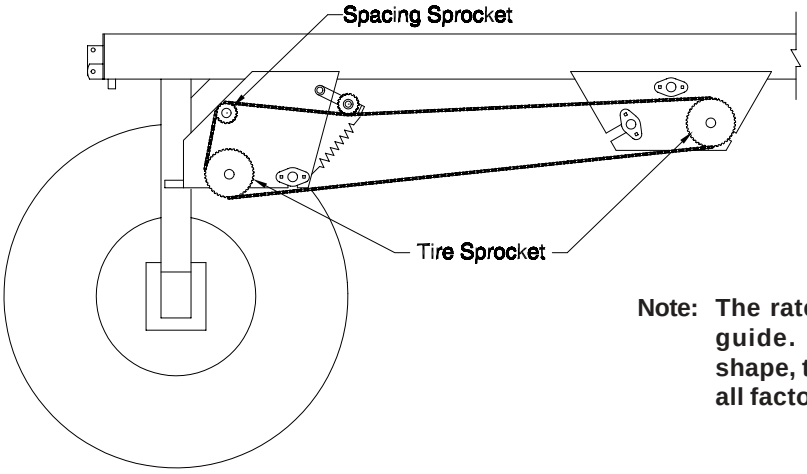

Note: The rate charts should only be used as a guide. Variation in seed size, density, shape, tire pressure and wheel sinkage are all factors that can influence the seed rate.

Rate Charts - continued

Tire Size Sprocket

In conjunction with the spacing sprocket is the tire size sprocket as illustrated in the previous diagram.

Check that the correct tire sprockets are installed on your machine. These sprockets are located on the inner side of each transmission input shaft and are driven by the spacing sprocket.

The tire sprocket must be matched to the tire size of the air cart.

Determining Tire Sprocket

Factors that may affect the tire circumference and in turn metering rates and monitor PPM values are as follows:

a) Tire size tolerances can vary +/- 4%.

b) Tire pressure.

c) Field soil conditions (firm-unworked versus soft-worked)

d) Tank capacity (empty tanks versus full tanks)

e) Tire manufacturer (Good-Year versus Firestone)

Note: The values used for monitor PPM values and tire size sprockets is based upon the tire circumference of Good-Year tires at proper pressure with half full tanks in normal working field conditions. (They are all based in reference to 16.5L x 16.1 tires.

16.5L x 16.1 tire - 6 ply rating - STII (Softrac II)
- 24 psi (165kPa)
- PPM = 6816
- Tire sprocket - 40 tooth
- Tire Circumference - 109" (2.7686 m)

To determine tire sprocket for other tires not listed in the chart or to check the actual tire circumference use the following equation:

- The tire circumference should be checked under normal field conditions with tanks half full.
- Mark tire and starting point.
- Drive air cart one revolution of tire.
- Mark ending point.
- Measure distance from starting point to ending point to get the rolling circumference of the tire.

Note: Incorrect tire size sprocket will cause inaccurate application rates.

Tire Sprocket			
Tire Size (Good-Year)	**Tire Style**	**Rating**	**Tire Sprocket**
16.5L x 16.1	Softrac II	6 ply	40 teeth
	Sure Grip Traction	6 ply	39 teeth
21.5L x 16.1	Softrac II	6 ply	35 teeth
	Sure Grip Traction	8 ply	35 teeth
	Softrac II	10 ply	35 teeth
	Sure Grip Traction	12 ply	35 teeth
18.4L x 26	AWT (Implement)	10 ply	28 teeth
23.1L x 26	AWT (Implement)	8 ply	26 teeth
	TD8 Sure Grip	10 ply	24 teeth
	AWT (Implement)	12 ply	26 teeth

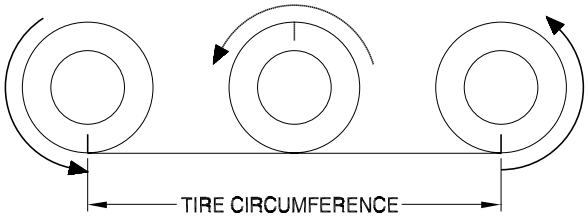

$$\text{New Tire Size Sprocket} = \left(\frac{109''}{\text{New Tire Circumference}}\right) \times 40$$

$$\text{New Tire Size Sprocket} = \left(\frac{2.7686\ \text{m}}{\text{New Tire Circumference}}\right) \times 40$$

Rate Charts - Continued

Rate Chart Use

The rate chart applies to all spacings listed below.

The spacing sprocket must be matched to the seeding tool trip spacing see *"Spacing Sprocket"*.

The charts should only be used as a guide. Specific rates can be achieved by using the rate check method as outlined under *"Rate Calibration"*.

To determine a seed/fertilizer rate from the chart:

- Go to the desired rate along the line marked "Standard" of a specific graph. (i.e. 95 lbs/acre of wheat)
- Go straight up from that point to where that line is intersected by the graph. This will give the sprocket size required to give the particular rate chosen.
- At this intersection go straight across to the vertical line of the graph. This will give the sprocket size required to give the particular rate chosen. (i.e. 95 lbs/acre of wheat requires a 29 tooth sprocket)
- Change the Quick Change Sprocket see *"Metering Rate Adjustment"*.
- Perform a rate check to confirm the seed rate see *"Rate Calibration"*.
- Repeat the above procedure for the other tank.
- For very low or very high rates, see next page *Extra Low Rates* and *Extra High Rates*.

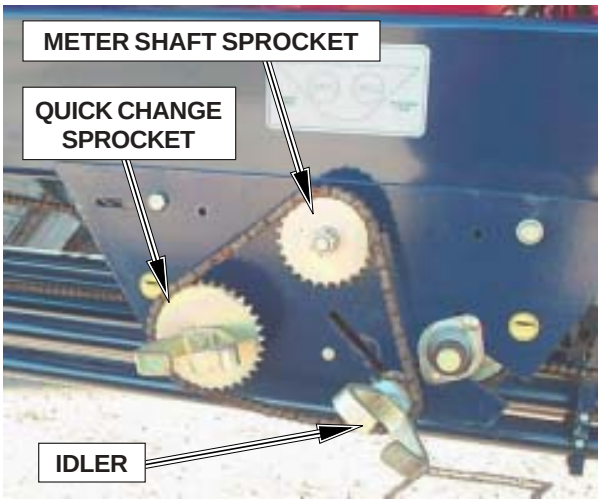

Note: The rate charts should only be used as a guide. Variation in seed size, density, shape, tire pressure and wheel sinkage are all factors that can influence the seed rate.

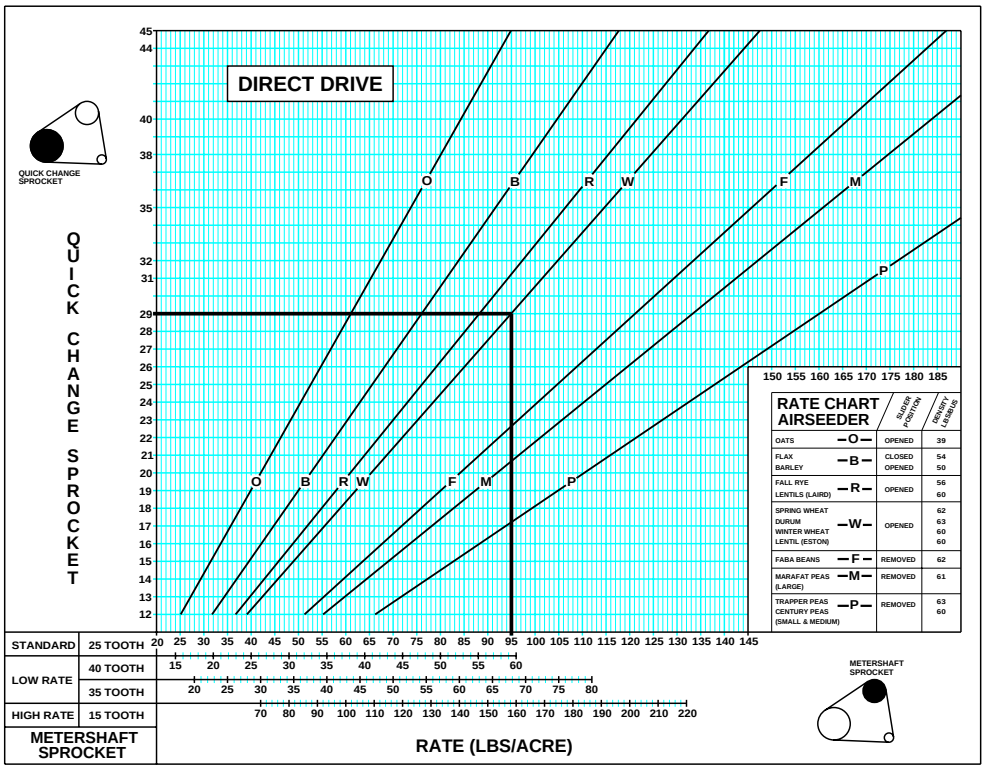

Rate Charts - Continued

Extra Low Rates

Although the charts show a minimum rate of 35 lbs. per acre for fertilizer and 20 lbs. per acre for seed, sometimes this is not low enough, especially when product is being metered from both tanks.

Rates under the values mentioned can be achieved by replacing the standard 25 tooth sprocket on the front of the transmission with either a 35 or 40 tooth sprocket.

The rates obtained when using the 35 and 40 tooth sprocket are shown on the rate charts beside the respective size sprocket.

When both tanks are being used to meter the same product ***without*** the Banding Kit, then the 25 tooth sprocket on each transmission must be changed. Now both transmissions will have the same size ***metershaft*** sprocket.

If the ***Banding Kit is installed,*** then only the 25 tooth sprocket on the ***front or rear*** transmission needs to be changed.

The same metering chain can be used with these larger sprockets up to a certain size of quick change sprocket.

To determine a rate from the chart:

- Go to the desired rate along the line next to the size of metershaft sprocket used.
- Go straight up from that point to where that line is intersected by the graph line of the particular product being metered.
- At this intersection go straight across to the vertical line of the graph. This will give the sprocket size required to give the particular rate chosen.
- Change the quick change sprocket and repeat the rate check to confirm the seed rate.
- Repeat the above procedure for the other tank.

Extra High Rates

In areas where higher rates of product are required the metershaft sprocket is changed from the standard 25 tooth to a 15 tooth.

Use the method described under EXTRA LOW RATES to determine the required metering rate.

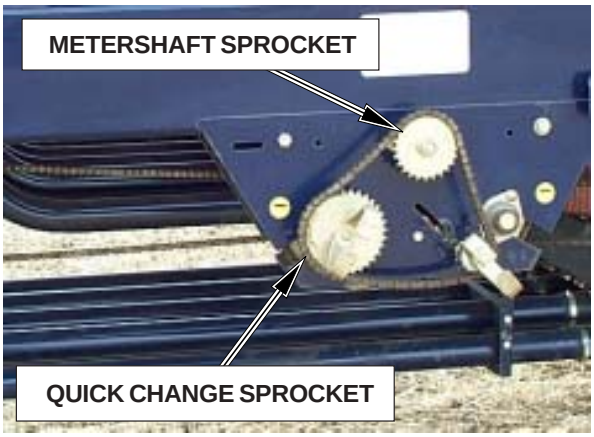

Rate	Metershaft Sprocket Size	Maximum Size of Quick Change Sprocket	Minimum Size of Quick Change Sprocket
Standard	25 Tooth	45 Tooth	12 Tooth
Low Rate (1)	35 Tooth	33 Tooth	12 Tooth
Low Rate (2)	40 Tooth	26 Tooth	12 Tooth
High Rate	15 Tooth	45 Tooth	18 Tooth

Rate Charts - Continued

Fertilizer Rate Chart: (Rear Transmission)

See Section 11 for Metric Rate Charts

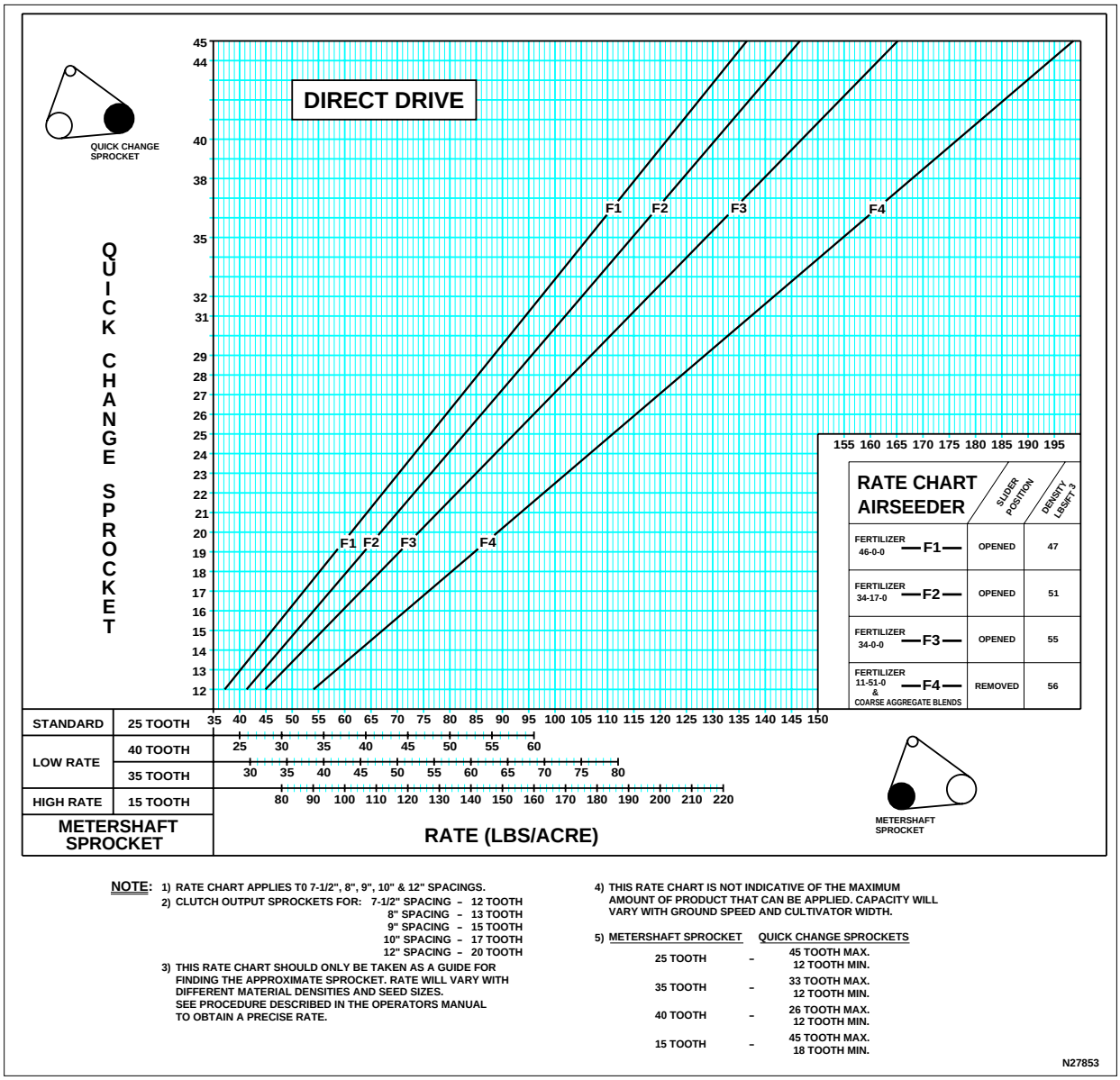

NOTE:
1) RATE CHART APPLIES T0 7-1/2", 8", 9", 10" & 12" SPACINGS.
2) CLUTCH OUTPUT SPROCKETS FOR:
   - 7-1/2" SPACING – 12 TOOTH
   - 8" SPACING – 13 TOOTH
   - 9" SPACING – 15 TOOTH
   - 10" SPACING – 17 TOOTH
   - 12" SPACING – 20 TOOTH
3) THIS RATE CHART SHOULD ONLY BE TAKEN AS A GUIDE FOR FINDING THE APPROXIMATE SPROCKET. RATE WILL VARY WITH DIFFERENT MATERIAL DENSITIES AND SEED SIZES. SEE PROCEDURE DESCRIBED IN THE OPERATORS MANUAL TO OBTAIN A PRECISE RATE.
4) THIS RATE CHART IS NOT INDICATIVE OF THE MAXIMUM AMOUNT OF PRODUCT THAT CAN BE APPLIED. CAPACITY WILL VARY WITH GROUND SPEED AND CULTIVATOR WIDTH.
5)

METERSHAFT SPROCKET		QUICK CHANGE SPROCKETS
25 TOOTH	–	45 TOOTH MAX. 12 TOOTH MIN.
35 TOOTH	–	33 TOOTH MAX. 12 TOOTH MIN.
40 TOOTH	–	26 TOOTH MAX. 12 TOOTH MIN.
15 TOOTH	–	45 TOOTH MAX. 18 TOOTH MIN.

N27853

Rate Charts - Continued

Soybeans Rate Chart: (Rear Transmission)

See Section 11 for Metric Rate Charts

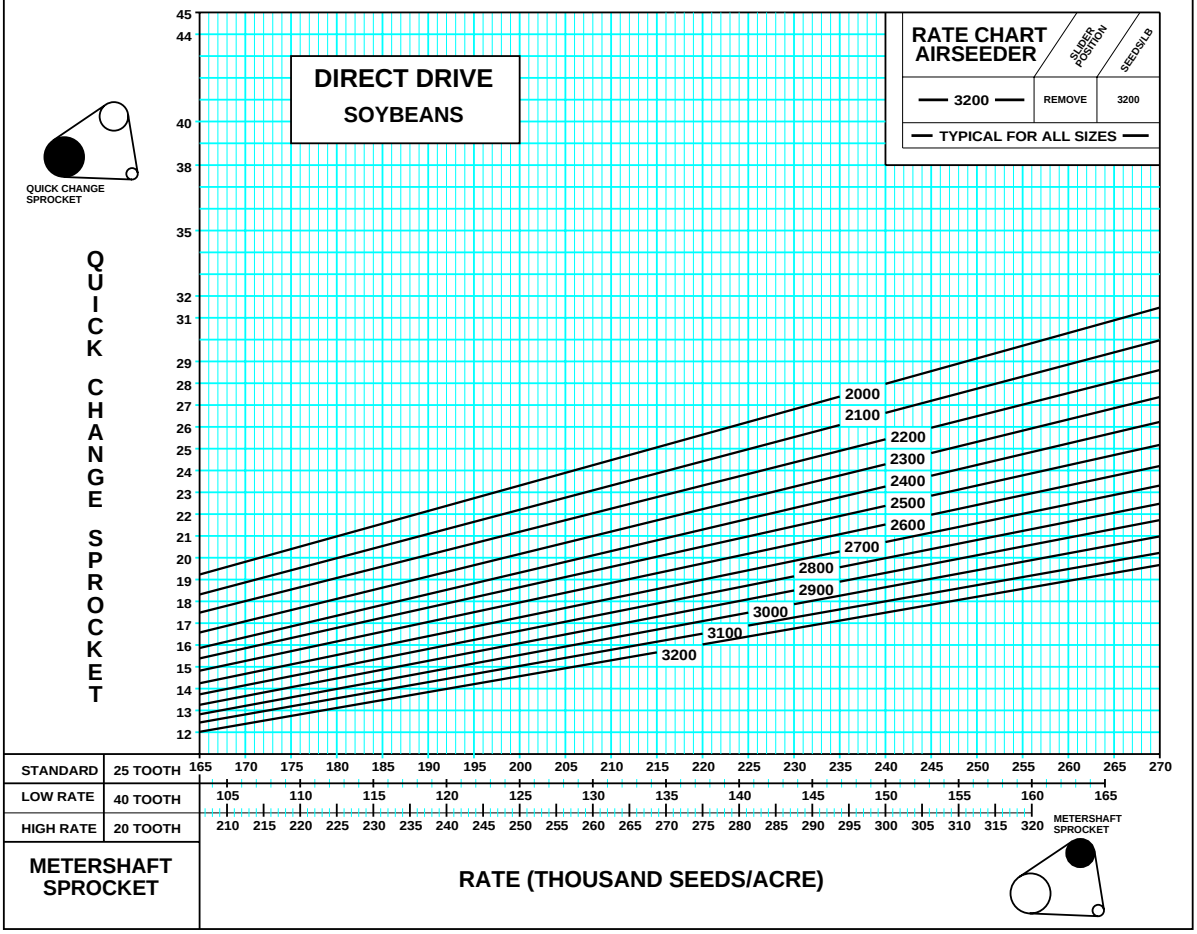

NOTE:

1) RATE CHART APPLIES T0 7-1/2" 8" 9" 10" & 12" SPACINGS.
2) CLUTCH OUTPUT SPROCKETS FOR: 7-1/2"SPACING - 12 TOOTH
   8" SPACING - 13 TOOTH
   9" SPACING - 15 TOOTH
   10" SPACING - 17 TOOTH
   12" SPACING - 20 TOOTH
3) THIS RATE CHART SHOULD ONLY BE TAKEN AS A GUIDE FOR FINDING THE APPROXIMATE SPROCKET. RATE WILL VARY WITH DIFFERENT MATERIAL DENSITIES AND SEED SIZES. SEE PROCEDURE DESCRIBED IN THE OPERATORS MANUAL TO OBTAIN A PRECISE RATE.
4) THIS RATE CHART IS NOT INDICATIVE OF THE MAXIMUM AMOUNT OF PRODUCT THAT CAN BE APPLIED. CAPACITY WILL VARY WITH GROUND SPEED AND CULTIVATOR WIDTH.
5)

METERSHAFT SPROCKET		QUICK CHANGE SPROCKETS
25 TOOTH	–	45 TOOTH MAX. 12 TOOTH MIN.
20 TOOTH	–	45 TOOTH MAX. 14 TOOTH MIN.
40 TOOTH	–	26 TOOTH MAX. 12 TOOTH MIN.

N28667

Rate Charts - Continued

Seed Rate Chart: (Front Transmission)

See Section 11 for Metric Rate Charts

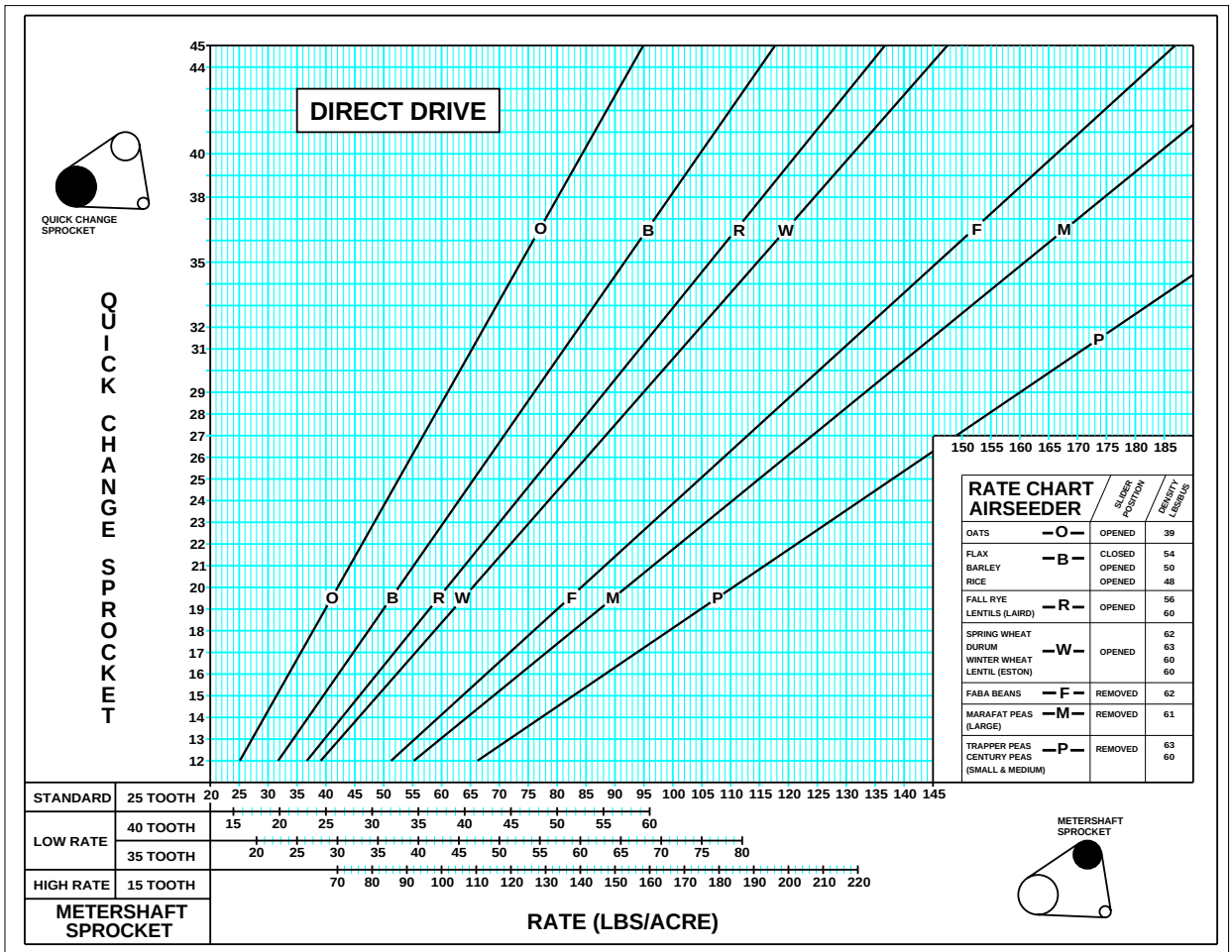

NOTE:

1) RATE CHART APPLIES T0 7-1/2", 8", 9", 10" & 12" SPACINGS.
2) CLUTCH OUTPUT SPROCKETS FOR: 7-1/2" SPACING – 12 TOOTH
   8" SPACING – 13 TOOTH
   9" SPACING – 15 TOOTH
   10" SPACING – 17 TOOTH
   12" SPACING – 20 TOOTH
3) THIS RATE CHART SHOULD ONLY BE TAKEN AS A GUIDE FOR FINDING THE APPROXIMATE SPROCKET. RATE WILL VARY WITH DIFFERENT MATERIAL DENSITIES AND SEED SIZES. SEE PROCEDURE DESCRIBED IN THE OPERATORS MANUAL TO OBTAIN A PRECISE RATE.
4) THIS RATE CHART IS NOT INDICATIVE OF THE MAXIMUM AMOUNT OF PRODUCT THAT CAN BE APPLIED. CAPACITY WILL VARY WITH GROUND SPEED AND CULTIVATOR WIDTH.
5)

METERSHAFT SPROCKET		QUICK CHANGE SPROCKETS
25 TOOTH	–	45 TOOTH MAX. 12 TOOTH MIN.
35 TOOTH	–	33 TOOTH MAX. 12 TOOTH MIN.
40 TOOTH	–	26 TOOTH MAX. 12 TOOTH MIN.
15 TOOTH	–	45 TOOTH MAX. 18 TOOTH MIN.

N27852

Rate Charts - Continued

Sunflowers Rate Chart: (Front Transmission)

See Section 11 for Metric Rate Charts

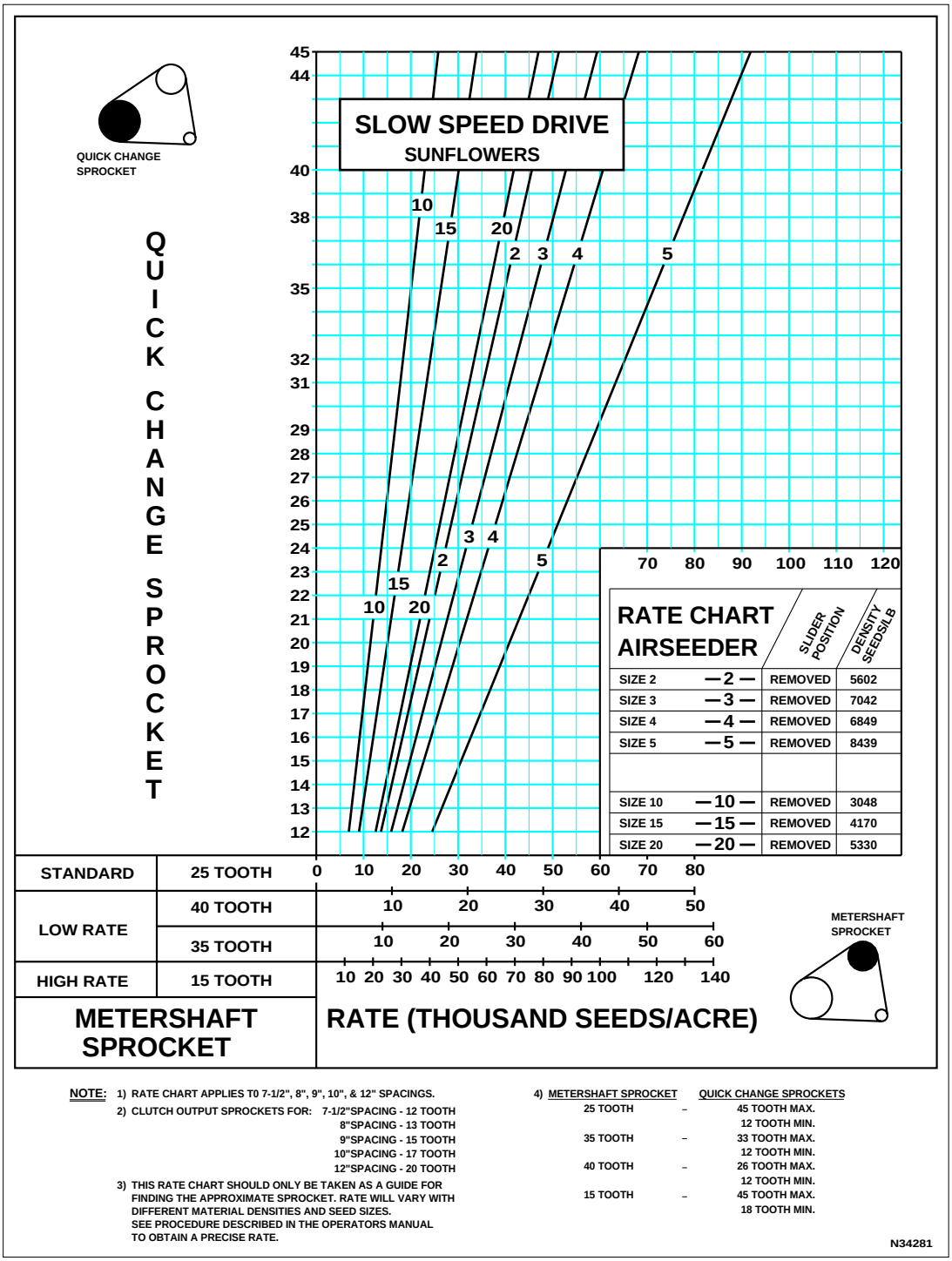

NOTE:
1) RATE CHART APPLIES T0 7-1/2", 8", 9", 10", & 12" SPACINGS.
2) CLUTCH OUTPUT SPROCKETS FOR: 7-1/2"SPACING - 12 TOOTH
8"SPACING - 13 TOOTH
9"SPACING - 15 TOOTH
10"SPACING - 17 TOOTH
12"SPACING - 20 TOOTH
3) THIS RATE CHART SHOULD ONLY BE TAKEN AS A GUIDE FOR FINDING THE APPROXIMATE SPROCKET. RATE WILL VARY WITH DIFFERENT MATERIAL DENSITIES AND SEED SIZES. SEE PROCEDURE DESCRIBED IN THE OPERATORS MANUAL TO OBTAIN A PRECISE RATE.
4)

METERSHAFT SPROCKET		QUICK CHANGE SPROCKETS
25 TOOTH	–	45 TOOTH MAX. 12 TOOTH MIN.
35 TOOTH	–	33 TOOTH MAX. 12 TOOTH MIN.
40 TOOTH	–	26 TOOTH MAX. 12 TOOTH MIN.
15 TOOTH	–	45 TOOTH MAX. 18 TOOTH MIN.

N34281

Rate Charts - Continued

Slow Speed Seed Rate Chart: (Front Transmission)

See Section 11 for Metric Rate Charts

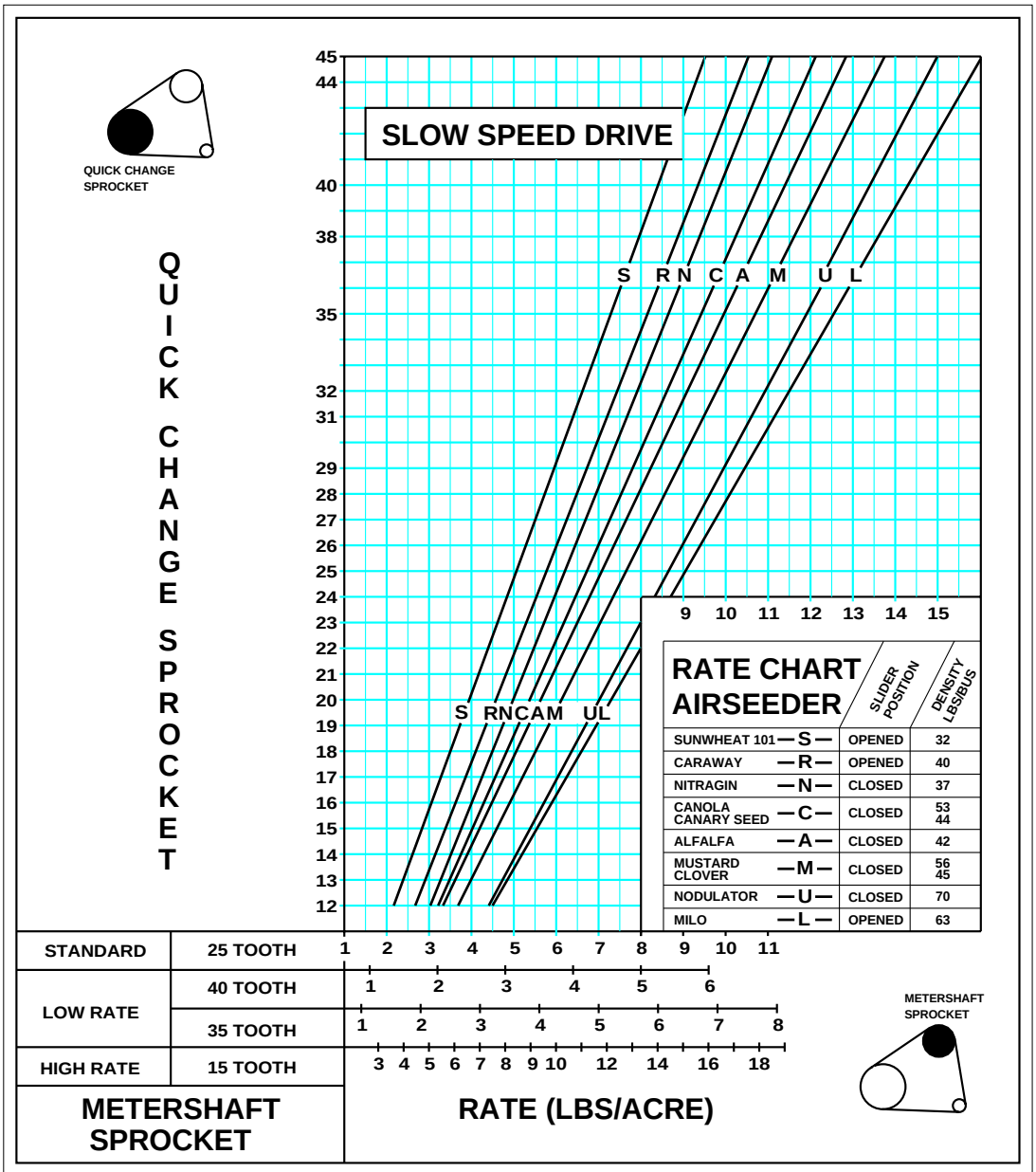

NOTE:
1) RATE CHART APPLIES T0 7-1/2", 8", 9", 10", & 12" SPACINGS.
2) CLUTCH OUTPUT SPROCKETS FOR: 7-1/2"SPACING - 12 TOOTH
8"SPACING - 13 TOOTH
9"SPACING - 15 TOOTH
10"SPACING - 17 TOOTH
12"SPACING - 20 TOOTH
3) THIS RATE CHART SHOULD ONLY BE TAKEN AS A GUIDE FOR FINDING THE APPROXIMATE SPROCKET. RATE WILL VARY WITH DIFFERENT MATERIAL DENSITIES AND SEED SIZES. SEE PROCEDURE DESCRIBED IN THE OPERATORS MANUAL TO OBTAIN A PRECISE RATE.
4)

METERSHAFT SPROCKET		QUICK CHANGE SPROCKETS
25 TOOTH	–	45 TOOTH MAX. 12 TOOTH MIN.
35 TOOTH	–	33 TOOTH MAX. 12 TOOTH MIN.
40 TOOTH	–	26 TOOTH MAX. 12 TOOTH MIN.
15 TOOTH	–	45 TOOTH MAX. 18 TOOTH MIN.

N27851

Rate Charts - Continued

Fertilizer Rate Chart: (Located on Front Tank of 7252 Only)

See Section 11 for Metric Rate Charts

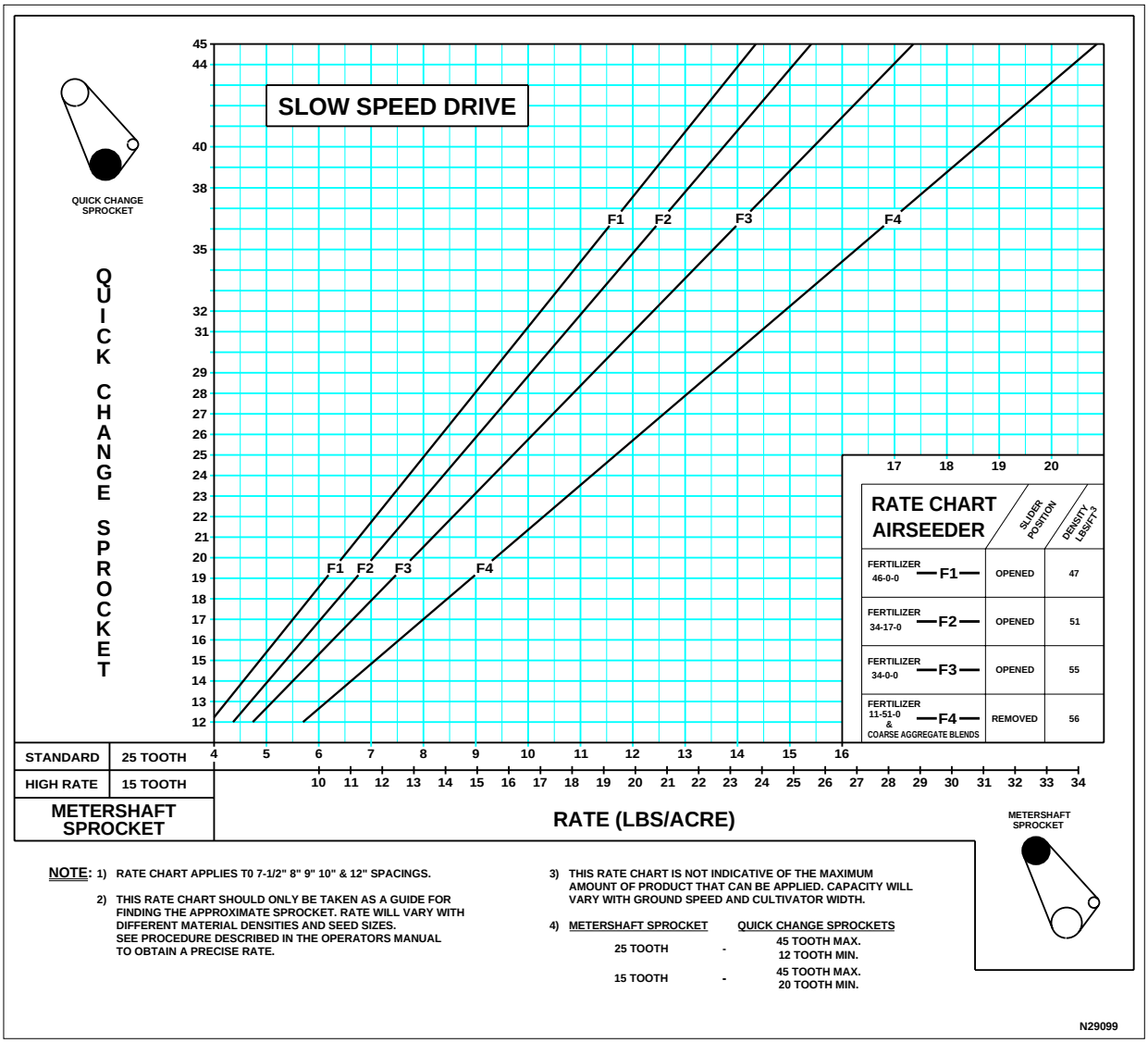

Rate Calibration

The practice of doing a rate calibration is strongly recommended as it will confirm the **actual** amounts of product being put into the ground.

Checking the rate on the 7000 Series Air Cart is very simple.

The following procedure is one that should be followed for every rate calibration or change of product.

- Refer to calibration chart for the correct number of turns of the crank. (See page 5-41 for imperial and page 11-2 for metric)
- Remove the wing nuts on the collector bottom.
- Remove the bottom of the collector.
- Remove the metering chain from the transmission that is **not** being checked.
- Check that the desired rate change sprocket is installed in the transmission.
- Turn the crank until material begins to fall through the collector body.
- Slide rate check box on the collector body.
- Turn the crank in direction of the arrow (Counter Clockwise) the required number of turns.

Note: Incorrect rates will occur if crank is rotated clockwise.

For **Fine Seeds** it is recommended to take a large sample. Typically to take a sample for 1/2 acre (1/4 hectare) or 1 acre (1/2 hectare).

Example:

For 1/2 acre sample for a 41 ft. wide cultivator with a 7180:

From the chart on page 5-41
Turns required for 1/10 acre = 11.33
Turns required for 1/2 acre = 11.33 x 5 = 56.65
Rate = lbs/acre
= 1/2 acre sample weight (lbs.) x 2

From the chart on page 11-2
Turns required for 1/10 hectare = 28
Turns required for 1/4 hectare = 28 x 2.5 = 70
Turns required for 1/2 hectare = 28 x 5 = 140
Rate = kg/hectare
= 1/4 hectare sample weight (kg) x 4
= 1/2 hectare sample weight (kg) x 2

Note: The fan must not be running when a rate check is performed.

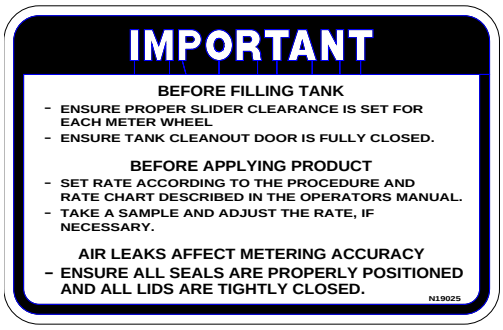

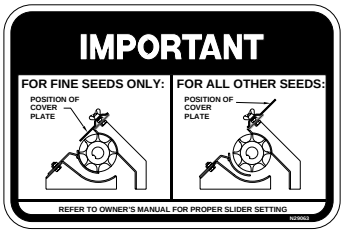

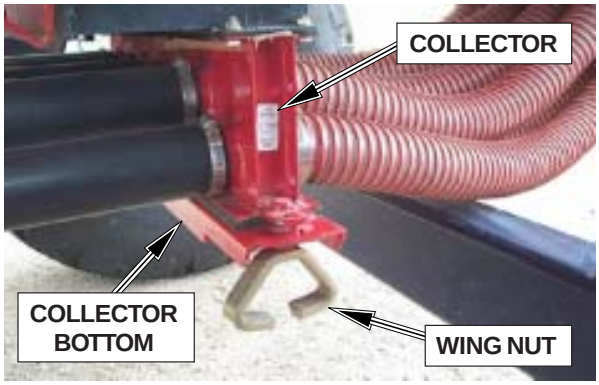

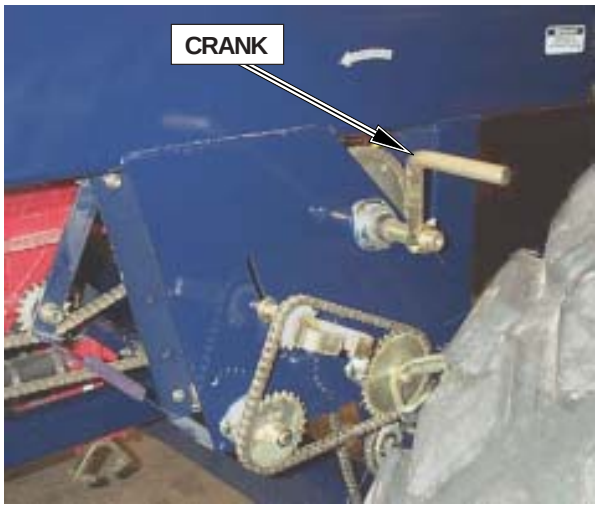

Rate Calibration - Continued

- Weigh the sample by using tarp straps to hook rate check box to spring scale.

Note: Remember to subtract the weight of the rate check box from the total sample weight.

- Check this rate against rate required.

  For 1/10 acre sample:

  Rate = lbs/acre = Sample Weight (lbs) x 10

  For 1/10 hectare sample:

  Rate = kg/ha = Sample Weight (kg) x 10

- If a different rate is required then increase or decrease the size of the rate change sprocket. Increasing the sprocket size will increase the rate and vice versa.

- Replace the bottom of the collector.

Note: Arrow directions on the collector bottom must point in the same direction as the ones on the collector body.

- Follow the above procedure to check the rate of the other tank.

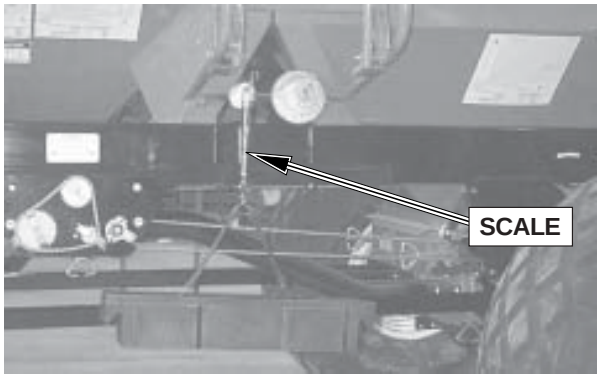

Alternative Rate Calibration

An alternate rate calibration method takes into account wheel sinkage and variations in tire circumference.

See the Monitor Section 6 (Application Rate). Instead of turning the calibration crank, the metering drive clutch is engaged and the seeder is pulled through a distance that equals at least 1/10 of an acre (1/10 hectare).

Note: Fan should not be running for either rate check method.

Imperial Rate Calibration Chart

7130 and 7180

See Rear of book for Metric calibration chart.

Calibration Chart based on 1/10 of an Acre.

W = Machine Width (Feet)

F = Optional Mechanical Acre Tally Factor = 56/R

R = Crank Rotation - turns
for 1/10 acre = 527.1/W for 7130 with 16.5 x 16.1 All Weather Tires.
for 1/10 acre = 464.6/W for 7130 & 7180 with 21.5 x 16.1 All Weather Tires.
for 1/10 acre = 460.8/W for 7180 with 21.5 x 16.1 Sure Grip Tires.

D = Distance required for 1/10 Acre (Feet) = 4356/W

$$\text{New Crank Rotations} = \left(\frac{D \times 12}{\text{Tire Circumference}}\right) \times \frac{48}{15} \times \frac{18}{48}$$

7000 Series Air Seeder
IMPERIAL RATE CALIBRATION CHART

WIDTH	AIRSEEDER MODEL						DISTANCE	WIDTH	AIRSEEDER MODEL						DISTANCE
	7130		7180						7130		7180				
[W]	Tire 16.5 x 16.1		Tire 21.5 x 16.1		Sure GripTire 21.5 x 16.1		[D]	[W]	Tire 16.5 x 16.1		Tire 21.5 x 16.1		Sure GripTire 21.5 x 16.1		[D]
(ft)	[R]	[F]	[R]	[F]	[R]	[F]	(ft)	(ft)	[R]	[F]	[R]	[F]	[R]	[F]	(ft)
21	25.10	2.23	22.13	2.53	21.94	2.55	207.43	51	10.34	5.42	9.11	6.15	9.03	6.20	85.41
22	23.96	2.34	21.12	2.65	20.94	2.67	198.00	52	10.14	5.52	8.94	6.26	8.86	6.32	83.77
23	22.92	2.44	20.20	2.77	20.03	2.80	189.39	53	9.95	5.63	8.77	6.39	8.69	6.44	82.19
24	21.96	2.55	19.36	2.89	19.20	2.92	181.50	54	9.76	5.74	8.60	6.51	8.53	6.57	80.67
25	21.08	2.66	18.59	3.01	18.43	3.04	174.24	55	9.58	5.85	8.45	6.63	8.38	6.68	79.20
26	20.27	2.76	17.87	3.13	17.72	3.16	167.54	56	9.41	5.95	8.30	6.75	8.23	6.80	77.79
27	19.52	2.87	17.21	3.25	17.06	3.28	161.33	57	9.25	6.05	8.15	6.87	8.08	6.93	76.42
28	18.83	2.97	16.59	3.38	16.45	3.40	155.57	58	9.09	6.16	8.01	6.99	7.94	7.05	75.10
29	18.18	3.08	16.02	3.50	15.89	3.52	150.21	59	8.93	6.27	7.88	7.11	7.81	7.17	73.83
30	17.57	3.19	15.49	3.62	15.36	3.65	145.20	60	8.79	6.37	7.74	7.24	7.68	7.29	72.60
31	17.00	3.29	14.99	3.74	14.86	3.77	140.52	61	8.64	6.48	7.62	7.35	7.55	7.42	71.41
32	16.47	3.40	14.52	3.86	14.40	3.89	136.13	62	8.50	6.59	7.49	7.48	7.43	7.54	70.26
33	15.97	3.51	14.08	3.98	13.96	4.01	132.00	63	8.37	6.69	7.38	7.59	7.31	7.66	69.14
34	15.50	3.61	13.67	4.10	13.55	4.13	128.12	64	8.24	6.80	7.26	7.71	7.20	7.78	68.06
35	15.06	3.72	13.28	4.22	13.16	4.26	124.46	65	8.11	6.91	7.15	7.83	7.09	7.90	67.02
36	14.64	3.83	12.91	4.34	12.80	4.38	121.00	66	7.99	7.01	7.04	7.95	6.98	8.02	66.00
37	14.25	3.93	12.56	4.46	12.45	4.50	117.73	67	7.87	7.12	6.93	8.08	6.88	8.14	65.01
38	13.87	4.04	12.23	4.58	12.12	4.62	114.63	68	7.75	7.23	6.83	8.20	6.78	8.26	64.06
39	13.52	4.14	11.91	4.70	11.81	4.74	111.69	69	7.64	7.33	6.73	8.32	6.68	8.38	63.13
40	13.18	4.25	11.62	4.82	11.52	4.86	108.90	70	7.53	7.44	6.64	8.43	6.58	8.51	62.23
41	12.86	4.35	11.33	4.94	11.24	4.98	106.24	71	7.42	7.55	6.54	8.56	6.49	8.63	61.35
42	12.55	4.46	11.06	5.06	10.97	5.10	103.71	72	7.32	7.65	6.45	8.68	6.40	8.75	60.50
43	12.26	4.57	10.81	5.18	10.71	5.23	101.30	73	7.22	7.76	6.36	8.81	6.31	8.87	59.67
44	11.98	4.67	10.56	5.30	10.47	5.35	99.00	74	7.12	7.87	6.28	8.92	6.23	8.99	58.86
45	11.71	4.78	10.33	5.42	10.24	5.47	96.80	75	7.03	7.97	6.20	9.03	6.14	9.12	58.08
46	11.46	4.89	10.10	5.54	10.02	5.59	94.70	76	6.94	8.07	6.11	9.17	6.06	9.24	57.32
47	11.21	5.00	9.89	5.66	9.80	5.71	92.68	77	6.85	8.18	6.03	9.29	5.98	9.36	56.57
48	10.98	5.10	9.68	5.79	9.60	5.83	90.75	78	6.76	8.28	5.96	9.40	5.91	9.48	55.85
49	10.76	5.20	9.48	5.91	9.40	5.96	88.90	79	6.67	8.40	5.88	9.52	5.83	9.61	55.14
50	10.54	5.31	9.29	6.03	9.21	6.08	87.12	80	6.59	8.50	5.81	9.64	5.76	9.72	54.45

Imperial Rate Calibration Chart

7180, 7240, 7252 and 7300

See Rear of book for Metric calibration chart.

Calibration Chart based on 1/10 of an Acre.

W = Machine Width (Feet)

F = Optional Mechanical Acre Tally Factor = 56/R

R = Crank Rotation - turns
for 1/10 acre = 368.9/W for 7180 with 18.4 x 26 All Weather Tires.
for 1/10 acre = 348.5/W for 7240, 7252 & 7300 with 23.1 x 26 All Weather Tires.
for 1/10 acre = 316.8/W for 7240, 7252 & 7300 with 23.1 x 26 Rice Tires.

D = Distance required for 1/10 Acre (Feet) = 4356/W

$$\text{New Crank Rotations} = \left(\frac{D \times 12}{\text{Tire Circumference}}\right) \times \frac{48}{15} \times \frac{18}{48}$$

7000 Series Air Seeder
IMPERIAL RATE CALIBRATION CHART

WIDTH	AIRSEEDER MODEL						DISTANCE	WIDTH	AIRSEEDER MODEL						DISTANCE
	7180		7240/7252/7300						7180		7240/7252/7300				
[W]	Tire 18.4 x 26		Tire 23.1 x 26		Rice Tire 23.1 x 26		[D]	[W]	Tire 18.4 x 26		Tire 23.1 x 26		Rice Tire 23.1 x 26		[D]
(ft)	[R]	[F]	[R]	[F]	[R]	[F]	(ft)	(ft)	[R]	[F]	[R]	[F]	[R]	[F]	(ft)
21	17.57	3.19	16.59	3.38	15.09	3.71	207.43	51	7.23	7.75	6.83	8.20	6.21	9.02	85.41
22	16.77	3.34	15.84	3.54	14.40	3.89	198.00	52	7.09	7.90	6.70	8.36	6.09	9.20	83.77
23	16.04	3.49	15.15	3.70	13.77	4.07	189.39	53	6.96	8.05	6.57	8.52	5.98	9.36	82.19
24	15.37	3.64	14.52	3.86	13.20	4.24	181.50	54	6.83	8.20	6.45	8.68	5.87	9.54	80.67
25	14.76	3.79	13.94	4.02	12.67	4.42	174.24	55	6.71	8.35	6.34	8.83	5.76	9.72	79.20
26	14.19	3.95	13.40	4.18	12.18	4.60	167.54	56	6.59	8.50	6.22	9.00	5.66	9.89	77.79
27	13.66	4.10	12.91	4.34	11.73	4.77	161.33	57	6.47	8.66	6.11	9.17	5.56	10.07	76.42
28	13.18	4.25	12.44	4.50	11.31	4.95	155.57	58	6.36	8.81	6.01	9.32	5.46	10.26	75.10
29	12.72	4.40	12.02	4.66	10.92	5.13	150.21	59	6.25	8.96	5.91	9.48	5.37	10.43	73.83
30	12.30	4.55	11.62	4.82	10.56	5.30	145.20	60	6.15	9.11	5.81	9.64	5.28	10.61	72.60
31	11.90	4.71	11.24	4.98	10.22	5.48	140.52	61	6.05	9.26	5.71	9.81	5.19	10.79	71.41
32	11.53	4.86	10.89	5.14	9.90	5.66	136.13	62	5.95	9.41	5.62	9.96	5.11	10.96	70.26
33	11.18	5.01	10.56	5.30	9.60	5.83	132.00	63	5.86	9.56	5.53	10.13	5.03	11.13	69.14
34	10.85	5.16	10.25	5.46	9.32	6.01	128.12	64	5.76	9.72	5.44	10.29	4.95	11.31	68.06
35	10.54	5.31	9.96	5.62	9.05	6.19	124.46	65	5.68	9.86	5.36	10.45	4.87	11.50	67.02
36	10.25	5.46	9.68	5.79	8.80	6.36	121.00	66	5.59	10.02	5.28	10.61	4.80	11.67	66.00
37	9.97	5.62	9.42	5.94	8.56	6.54	117.73	67	5.51	10.16	5.20	10.77	4.73	11.84	65.01
38	9.71	5.77	9.17	6.11	8.34	6.71	114.63	68	5.43	10.31	5.12	10.94	4.66	12.02	64.06
39	9.46	5.92	8.93	6.27	8.12	6.90	111.69	69	5.35	10.47	5.05	11.09	4.59	12.20	63.13
40	9.22	6.07	8.71	6.43	7.92	7.07	108.90	70	5.27	10.63	4.98	11.24	4.53	12.36	62.23
41	9.00	6.22	8.50	6.59	7.73	7.24	106.24	71	5.20	10.77	4.91	11.41	4.46	12.56	61.35
42	8.78	6.38	8.30	6.75	7.54	7.43	103.71	72	5.12	10.94	4.84	11.57	4.40	12.73	60.50
43	8.58	6.53	8.10	6.91	7.37	7.60	101.30	73	5.05	11.09	4.77	11.74	4.34	12.90	59.67
44	8.38	6.68	7.92	7.07	7.20	7.78	99.00	74	4.99	11.22	4.71	11.89	4.28	13.08	58.86
45	8.20	6.83	7.74	7.24	7.04	7.95	96.80	75	4.92	11.38	4.65	12.04	4.22	13.27	58.08
46	8.02	6.98	7.58	7.39	6.89	8.13	94.70	76	4.85	11.55	4.58	12.23	4.17	13.43	57.32
47	7.85	7.13	7.41	7.56	6.74	8.31	92.68	77	4.79	11.69	4.53	12.36	4.11	13.63	56.57
48	7.69	7.28	7.26	7.71	6.60	8.48	90.75	78	4.73	11.84	4.47	12.53	4.06	13.79	55.85
49	7.53	7.44	7.11	7.88	6.47	8.66	88.90	79	4.67	11.99	4.41	12.70	4.01	13.97	55.14
50	7.38	7.59	6.97	8.03	6.34	8.83	87.12	80	4.61	12.15	4.36	12.84	3.96	14.14	54.45

Seeding Fine Seeds (Canola, Mustard, etc.)

When seeding fine seeds such as canola or mustard, the slow speed transmission has to be engaged to ensure the low rates required for these products.

The slow speed transmission is incorporated in the **FRONT** Posi-Drive Transmission.

- To engage the slow speed, remove the large hairpin from the front shaft and install through the sleeve and shaft located at the rear of the transmission.

Note: Shaft will have to be rotated to align holes for pin insertion.

- To disengage the slow speed, reverse the above procedure.
- Rate checks can be performed the same way as for other seeds.
- Usually it is necessary to reduce the fan rpm when seeding fine seeds. See *Fan Speed* for specific fan speeds.

Note: Seed must be placed in the front tank.

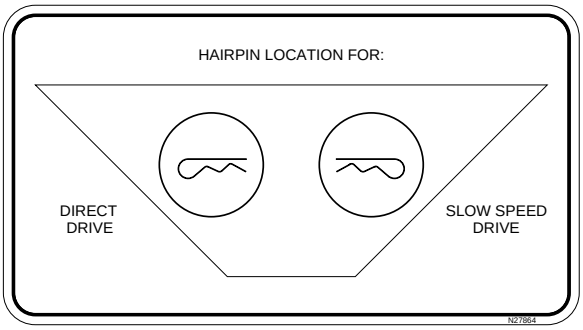

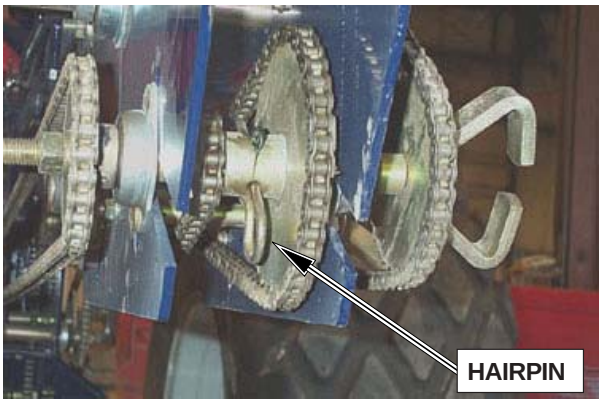

Applying Inoculant

When inoculant is applied at the time of seeding, then once the Air Cart has been filled, the fill-lids should be left open and the fan run for 5-10 minutes at full rpm to dry the seed.

Calibration must be done after the seed is dried, otherwise the calibration will be incorrect.

Note: If the seed is not dried then the seed will have a tendency to bridge and not meter into the air stream.

Fan Speed Setting

Hydraulic Fan Drive

The hydraulic motor used on the 7000 Series Air Cart requires a load sensing or closed centre hydraulic system with flow control.

These systems provide only the necessary amount of oil to operate the fan at a specific speed.

The hydraulic motor will also work on some open centre systems, however the respective tractor manufacturer should be consulted before the hydraulic driven fan is installed.

Fan speed is adjusted by increasing the amount of oil being delivered to the motor. This is done by adjusting the respective flow control valve until the desired rpm is displayed on the monitor.

Note: There is a one-way check valve installed in the hydraulic circuit. If the fan does not rotate, then move hydraulic lever in the opposite direction; this will engage the fan. This valve prevents damage to the hydraulic systems when the fan is shut OFF, by allowing the fan to freewheel.

Hydraulic Drive

IMPORTANT

Run hydraulic fan drive at lowest rpm possible (1,000-2,000) for 5-10 minutes before operating at set rpm. This is required to warm up the hydraulic fluid. Cold hydraulic fluid will cause pressure spikes in the system that will damage the case drain seal in the orbit motor.

Engine Driven Fan

The engine drives the fan through a set of belts and pulleys.

To increase or decrease the fan speed is a simple matter of increasing or decreasing the engine speed until desired fan speed is indicated on the monitor. So as not to overload the engine, the minimum fan speed is 3000 rpm.

Note: Maximum engine operation rpm. Do not adjust governor to increase engine speed above this set point.

Engine Drive

Fan Speed

Adequate air volume is necessary at all times to carry the product in the air stream. Air volume can be controlled by adjusting hydraulic oil flow on hydraulic fan drives or adjusting engine speed on engine fan drive models.

Air volume hence fan speed requirements will vary with:

(a) Ground speed
(b) Metering rate
(c) Number of primary runs
(d) Width of machine
(e) Density and size of material

Excessive fan speed can cause seed damage, seed bouncing and premature wear of the system.

Generally fan speed is adequate if product flows through the hoses without surging and the hoses empty quickly and evenly when the system shuts down.

The table lists *suggested **minimum** fan speeds* for certain products. **The table should be used only as a guide.** If plugging or surging occurs increase the fan speed to eliminate the problem.

Note: It is recommended that after a rain or dew the fan be run two to three minutes to expel any moisture in the system.

Important

Keep fan impeller blades clean at all times.

Note: Once fan speed is properly set, be sure to adjust the monitor fan alarm setting accordingly. See Monitor Section "Monitor Programing".

Suggested ***Minimum*** Fan RPM

Product	Application Rate		Fan Speed Setting	
	Seed	Fertilizer	Single Shoot	Double Shoot
Fine Seeds	All Rates	All Rates	3000 RPM	3000 RPM
Lentils	All Rates	All Rates	3800 RPM	3800 RPM
Coarse Grains	90 lbs/acre (100 kg/ha)	50 lbs/acre (56 kg/ha)	4300 RPM	3800 RPM
	90 lbs/acre (100 kg/ha)	100 lbs/acre (112 kg/ha)	4500 RPM	3800 RPM
	90 lbs/acre (100 kg/ha)	>150 lbs/acre (168 kg/ha)	4800 RPM	4000 RPM
Large Seeds	180 lbs/acre (200 kg/ha)	40 lbs/acre (45 kg/ha)	4400 RPM	4000 RPM
Fertilizer Light	* * * * *	<100 lbs/acre (112 kg/ha)	4000 RPM	* * * * *
Fertilizer Heavy	* * * * *	>100 lbs/acre (112 kg/ha)	4500 RPM	* * * * *

Note: Fan Speeds given are when applying product.
It is normal for fan speed to drop when not applying product.

Double Shoot Settings

Double Shooting is done with a few simple adjustments as follows:

1. Plenum Setting
2. Diverter Setting
3. Quick Coupler Position (Tow Behind Only)

Plenum Damper Settings

Adequate air volume is necessary at all times to carry the product in the air stream. Air volume can be controlled by adjusting the plenum damper settings.

The table below lists initial plenum damper settings for certain products.

Note: The settings in table should be used only as a guide.

- If **fertilizer** plugging or surging occurs **decrease** the seed damper setting to eliminate the problem.
- If **seed** plugging or surging occurs **increase** the seed damper setting to eliminate the problem.

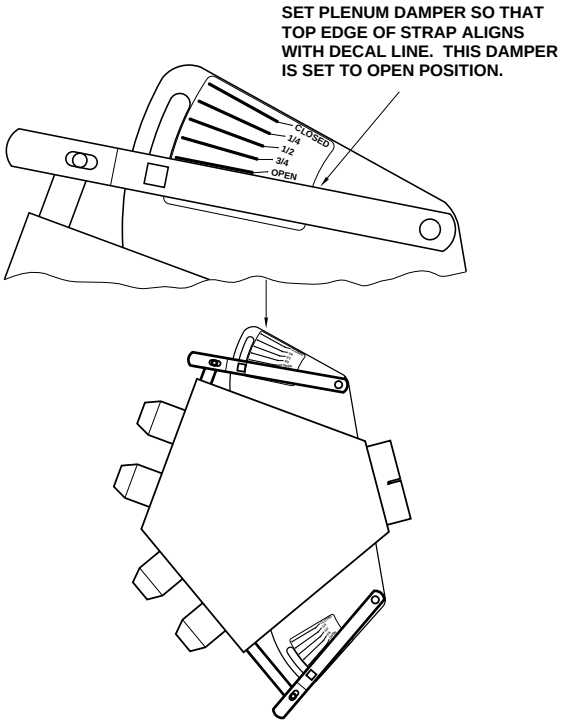

Diverter Settings

Located between the metering bodies in each primary line are two diverter valves. The diverters must be correctly set in order for product to flow correctly as outlined on page 5-47 and 5-48.

1. Double Shoot - Handles in Double Shoot Position.
2. Single Shoot - Handles in Single Shoot Position.

Quick Coupler (Tow Behind Only)

The Quick Coupler located on the rear of the seeding tool has two positions. In order to maintain correct product flow the coupler must be set in correct position as outlined on page 5-47.

1. Double Shoot - Top Position
2. Single Shoot - Lower Position

Suggested Plenum Settings for Average Rates

Product	Seed		Fertilizer	
	Rate lb/acre	Damper Setting	Rate lb/acre	Damper Setting
Fine Seeds	All Rates	1/4	All Rates	Open
Coarse Grains	90 lb (100 kg/ha)	Open	50 lb (56 kg/ha)	1/2
	90 lb (100 kg/ha	Open	100 lb (112 kg/lb)	Open
	90 lb (100 kg/ha)	1/4	150 + lb (168 kg/ha)	Open
Large Seeds	180 lb (200 kg/ha)	Open	40 lb (45 kg/ha)	1/4
Single Shoot	Tow Behind	- Top Damper Closed - Bottom Damper Open		
	Tow Between	- Top Damper Open - Bottom Damper Closed		

Note: See "Fan Speeds" for Fan RPM.

Double Shoot Settings - Continued

Double Shoot Tow Behind

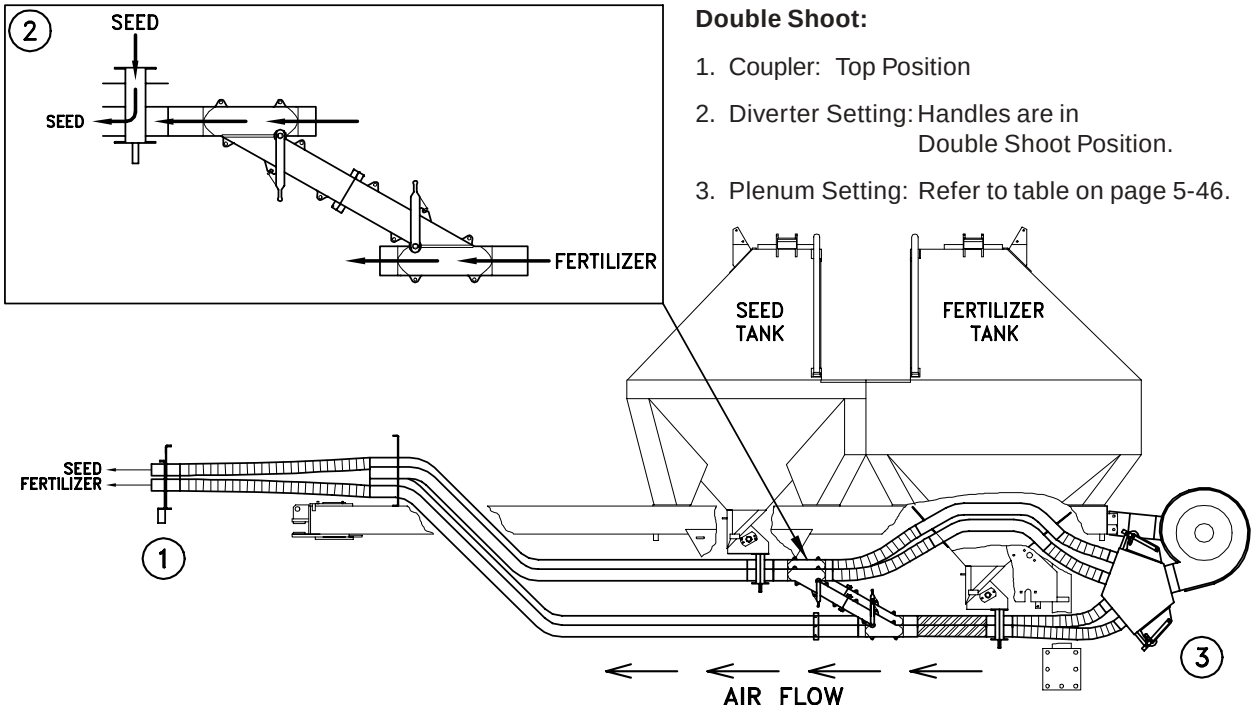

Double Shoot:

1. Coupler: Top Position
2. Diverter Setting: Handles are in Double Shoot Position.
3. Plenum Setting: Refer to table on page 5-46.

Single Shoot Tow Behind

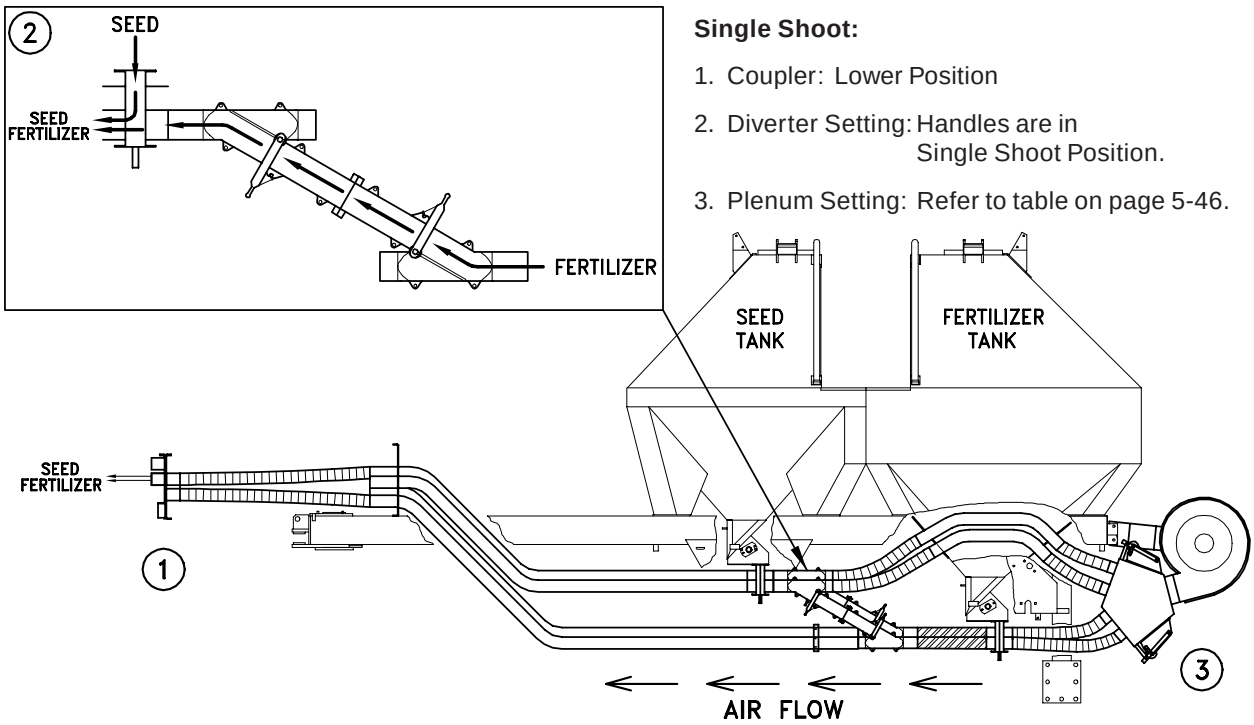

Single Shoot:

1. Coupler: Lower Position
2. Diverter Setting: Handles are in Single Shoot Position.
3. Plenum Setting: Refer to table on page 5-46.

Double Shoot Settings - Continued

Double Shoot Tow Between

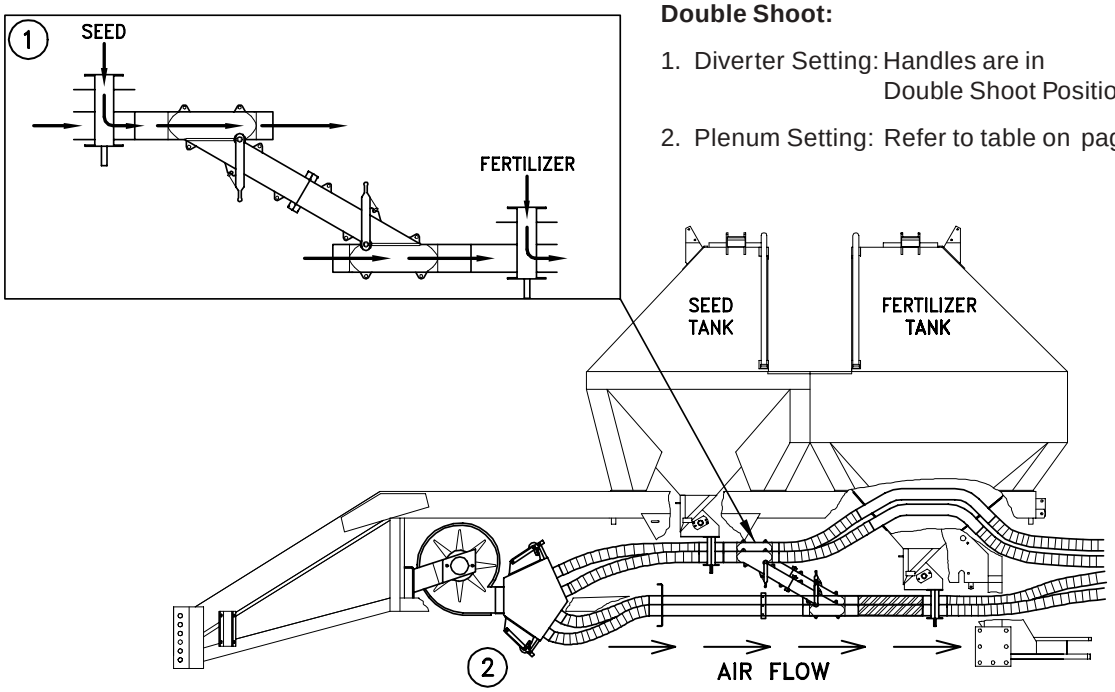

Double Shoot:

1. Diverter Setting: Handles are in Double Shoot Position.
2. Plenum Setting: Refer to table on page 5-46.

Single Shoot Tow Between

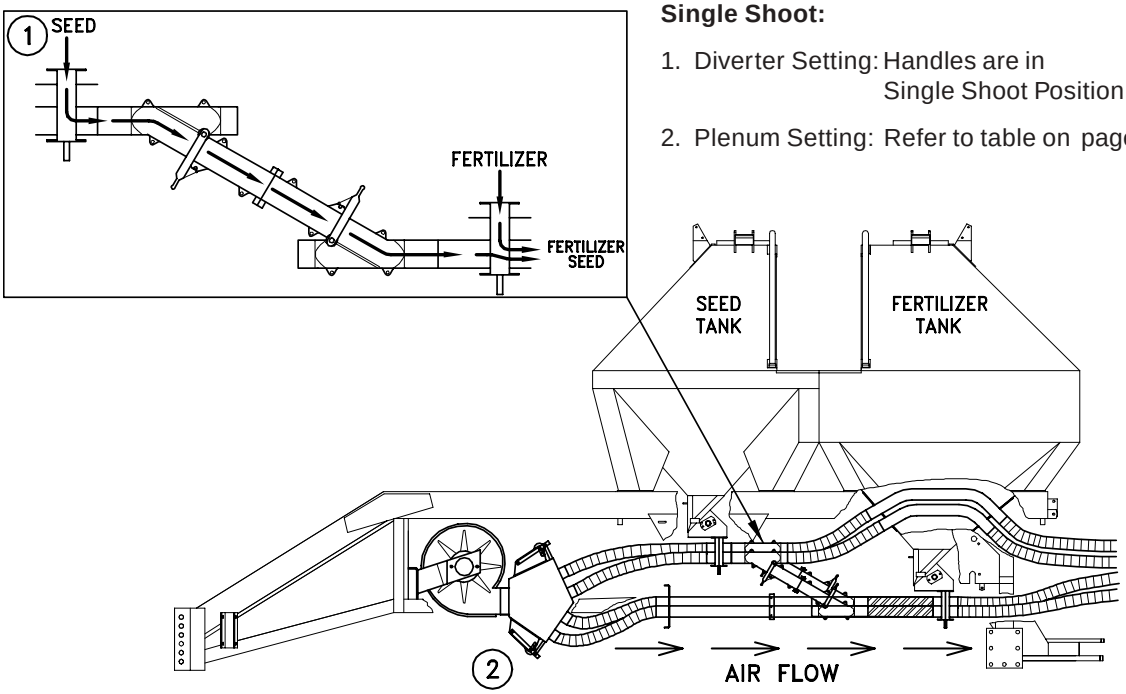

Single Shoot:

1. Diverter Setting: Handles are in Single Shoot Position.
2. Plenum Setting: Refer to table on page 5-46.

Fertilizer Banding Kit

The fertilizer banding kit joins the two transmissions together, so only the front or rear transmission needs to be set for different rates.

The product is then metered at a 40:60 split in the rate. The **front tank meters 40%** of the desired rate and the **rear tank meters 60%** of the desired rate.

To determine the rate sprocket and calibration of Air Cart use the following procedure:

Using Rear Transmission

The amount collected from the rear tank is ***60%*** the ***total*** amount being metered into the air stream.

- Multiply the desired rate **(DR)** by 60% to determine the rate being metered from the rear tank **(RR)**. **DR x .6 = RR**
- Use the rear tank rate **(RR)** to determine the rate change sprocket to use. See *Rate Charts* Section
- Remove the chain joining the two transmissions before taking rate calibration samples from **rear tank *only***. See *Rate Calibration* Section.

This will prevent material from being deposited into the front collector body that is not being checked and avoid a possible plugging of the hoses.

- The sample taken from the tank should be 60% of the desired rate as determined above **(RR)**.

Using Front Transmission

The amount collected from the front tank is ***40%*** the ***total*** amount being metered into the air stream.

- Multiply the desired rate **(DR)** by 40% to determine the rate being metered from the front tank **(RF)**. **DR x .4 = RF**
- Use the front tank rate **(RF)** to determine the rate change sprocket to use. See *Rate Charts* Section
- Remove the chain joining the two transmissions before taking rate calibration samples from **front tank *only.*** See *Rate Calibration* Section.

This will prevent material from being deposited into the rear collector body that is not being checked and avoid a possible plugging of the hoses.

- The sample taken from the tank should be 40% of the desired rate as determined above **(RF)**.

Important

Remove the meter drive chain from the transmission not in use. Severe damage to drive components will result otherwise.

Note: Supplied in section "*Fertilizer Banding Kit*" (at rear of book) are rate charts which are based on the 60/40 split for easy rate sprocket selection.

Rear Transmission

Example:

For a **desired rate (DR)** of 100 lbs. per acre:

Determine **Rear Tank Rate (RR)**

DR x .6 = RR

100 lbs/acre x .6 = 60 lbs/acre

100 kg/ha x .6 = 60 kg/ha

Determine sprocket size required to apply 60 lbs/acre from Rate Chart on Air Cart.

Front Transmission

Example:

For a **desired rate (DR)** of 100 lbs. per acre:

Determine **Front Tank Rate (RF)**

DR x .4 = RF

100 lbs/acre x .4 = 40 lbs/acre

100 kg/ha x .4 = 40 kg/ha

Determine sprocket size required to apply 40 lbs/acre from Rate Chart on Air Cart.

Operating Engine

Before Starting Engine

- Check oil level, add if low.
- Check fuel level, add if low.
- Check to make sure all guards are in place.
- Clean pre-cleaner and inspect air cleaner (primary filter) and check to make sure that all air cleaner parts are connected correctly.
- Check that gas tank vented filler cap is clear.
- Clear any straw or debris from the cooling fins.

Refer to engine manual for more detail.

Starting engine

- Set throttle between slow and fast positions.
- Pull choke control out.
- Activate starter switch to start engine.

Note: Do not crank engine for more than 10 seconds. If engine does not start, allow 60 seconds cool down period between starting attempts. Failure to do so may cause starter motor failure.

- As engine warms up gradually return choke to off position.

Note: The engine is protected against overheating and low oil pressure by an automatic shutdown system. This is to help prevent damage to the engine should either or both occur.

Engine Drive

Hydraulic Fan Drive

The orbit motor on the fan requires tractor to have either a load sensing hydraulic system or a closed centre hydraulic system with flow control.

Maximum flow required is 13 U.S. g.p.m. (49 l) minimum pressure of 2100 p.s.i.(14,469 kPa). However smaller flows can be used depending on the product being metered.

For correct operation of the fan the hydraulic motor must be coupled to the priority valve (if tractor is so equipped) in the hydraulic valve bank.

Check with the tractor manual or manufacturer to determine if or which spool is a *"priority valve"*.

Speed fluctuations will result if the fan is not connected to the priority valve if hydraulic system is equipped with a priority valve.

Ensure couplers are free of dirt and are clean when connecting the fan hydraulics to the tractor.

The fan has a one way check valve that only allows oil to flow in one direction. It may be necessary to reverse the hydraulic hoses at the couplers to obtain the correct operation.

A piston motor creates leakage past the internal components for lubrication. This oil needs to go back to the oil reservoir, the lowest pressure possible. The motor has a 3/8" (10 mm) diameter drain line. This line must be connected directly into the tractor hydraulic reservoir to ensure that there is zero back pressure in the drainline, otherwise damage will result to the motor.

Orbit Motor Drive

IMPORTANT

Typical shaft seal failures occur when the case drain quick coupler is not attached properly or if the Air Cart is started in cold weather - cold weather makes the hydraulic oil very viscous - any time the *Air Cart is started in cold weather the tractor hydraulics should be allowed to warm up first and then the fan should be started and run at the slowest speed possible for 5-10 minutes before going to full speed.*

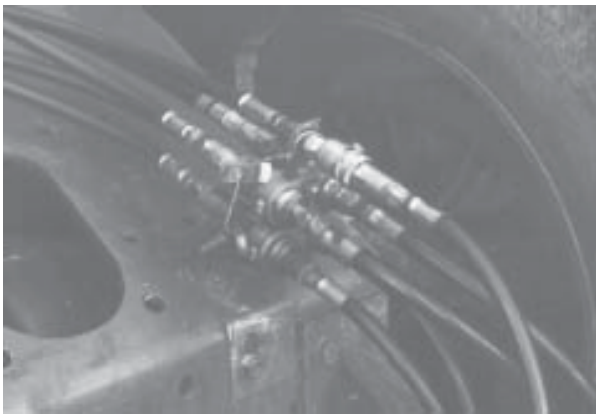

Hydraulic Coupling

Operating Guidelines

There are a number of areas that can cause problems when seeding. Listed below are specific points that should be addressed at all times. Following these guidelines will ensure better crop emergence and consequently the potential for better yields.

An improperly levelled seeding tool cause uneven depth which could result in poor emergence.

It is important that the seeding tool is levelled both side to side and front to back.

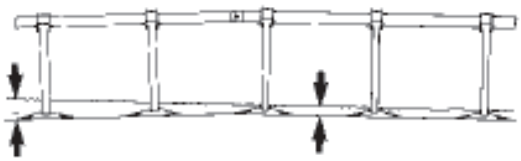

Side to Side Level

Check Tire Pressures

- Ensure all tires are inflated to their specified pressure. Incorrect tire pressure can cause depth variations.

Level Seeding Tool Side to Side

- Check the depth of each shovel on the back row.
- Adjust side to side level as necessary. See seeding tool manual for more details.

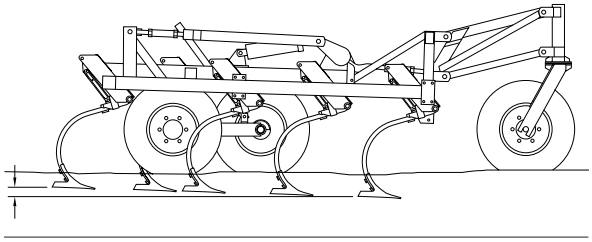

Front to Back Level

Level Seeding Tool Front to Rear

- Poor front to rear levelling causes ridging as shown.
- Check the depth of two adjacent shanks normally one on the front row and one on the rear row.
- Adjust level as necessary. See seeding tool manual for more details.

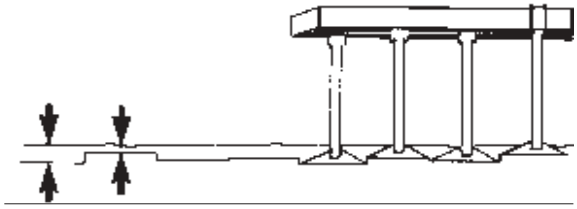

Ridging Front to Back

Worn Seeding Tool Parts

- Shanks that are bent cause uneven depth and they should be repaired or replaced.
- Trip mechanisms that are worn can also cause poor depth control and any worn parts should be repaired or replaced.

Packing

- Packing behind the seeding unit is strongly recommended. This improves germination and helps reduce moisture loss and erosion.
- In wet conditions the head land should be done last to prevent over packing.

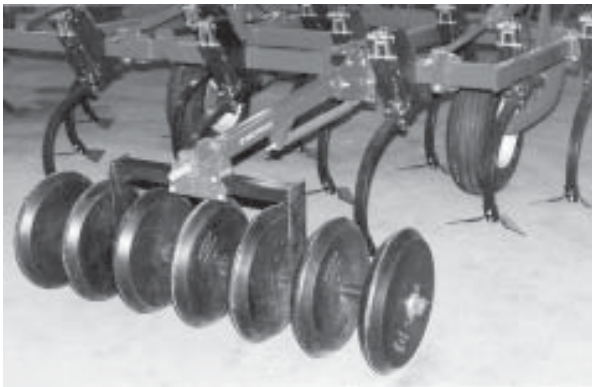

Mounted Packers

Operating Guidelines - Continued

Turning

- Avoid sharp turns. Backing up of the outer wings with the seeding tool in the ground has a tendency to plug the seed boot with soil.
- Raise seed boots fully before making sharp turns or backing machine.

Seed Rate Settings

- Remove any caked-on material from sliders and metering wheels.
- Ensure all sliders are properly set and wheels turn freely.
- Check product rates carefully by performing a calibration check.

Fertilizer Application

- Avoid using fertilizers that absorb moisture readily, especially during periods of high humidity.
- Also avoid fertilizers that contain a high percentage of fine dust, as these materials can plug metering wheels and coat the inside of seed distribution system.

Fan Setting

- Run fan at recommended speed. If plugging or surging occurs increase the fan speed to eliminate the problem.
- Allow tractor hydraulic oil to warm-up thoroughly prior to seeding. Cold oil will cause slower fan speeds (Hydraulic driven fan).

Product Application

- Control product application with the clutch switch in tractor.
- Have machine moving forward before lowering seed boots to avoid plugging.
- To prevent skipping, allow 15 feet (5 m) of forward travel to ensure air system has delivered product to seed boots.

Note: It is strongly recommended to consult local agricultural extension offices for allowable product rates, which are dependent on soil moisture and type.

Note: If equipped with a granular tank, the lines must be blocked off when not in use.

Note: Do not attempt to meter product when fan is not running. Damage to the metering wheels may occur.

Operating Guidelines - Continued

Adjustments and Operational Checks

- When changing fields and periodically throughout the day the seeding tool should be checked for level and depth and the seed boots for blockage.

Checking Seed Flow

The following procedure should be implemented throughout the day typically at each fill of the Air Cart:

- Raise the seeding tool out of the ground.
- With the fan running turn the crank on the rear transmission 4 or 5 turns.
- Seed and/or fertilizer should appear at each outlet on the ground.
- If no seed or fertilizer appears on the ground at any of the openers check for hose blockage in both the 15/16” (24 mm) diameter secondary and the 2 1/2” (64 mm) diameter primary hose, as well as in the flat fan divider.
- See Trouble Shooting Section for possible causes of the blockage.

Moisture Alert

- Whenever Air Cart has been standing for an hour or more during period of high humidity or damp, rainy days, or after sitting overnight, run fan at recommended rpm, with machine stationary for 5 minutes.

Air Leaks

It is imperative that no air leaks occur in the Air Cart tank as even the smallest air leak from the lid will lead to material bridging in the tank thereby causing misses in the field.

Check the following areas for air leaks:
- Tank clean-out door
- Metering body assembly seals
- Collector assembly seals
- Tank lid

Tank Low in Product

- Refill tank before metering wheels are exposed.
- The metering wheels must be completely covered to avoid unseeded strips.

Important

Check Metering Wheel keyways in the event the primary lines plug.

Keyways may shear if the collector becomes pluged.

Note : Check Seed Flow as described above, after running fan for 5 minutes.

Operating Guidelines - Continued

Monitor

- Familiarize yourself with all monitor functions.
- Ensure all monitor *"settings"* are correctly set for the Air Cart/Seeding Tool combination.
- Recognize and correct alarm conditions as indicated on the machine.
- Check all wire harness connections for corrosion and use a dielectric spray to clean. Inspect all sensors for proper gap.

Monitor

Opener Adjustments - Double Shoot Boots

Improperly adjusted or worn seed openers can cause poor seed/fertilizer separation and plugging which could result in poor emergence.

It is important that the seed openers be properly adjusted.

Note: Points should be adjusted according to wear and deflectors replaced when worn.

Listed below are guidelines for seed openers S25962, S28158, S29000, and S29140.

Note: When applying Anhydrous Ammonia it is strongly recommended to consult local agricultural extension offices for allowable rates which are dependent on soil moisture and soil type.

Soil Condition	Point Position		
	Top	**Middle** (Factory Setting)	**Bottom**
Light Soil	Soil moisture medium	Soil moisture wet NH^3 or liquid application	Soil moisture dry NH^3 or liquid application Worn Point adjustment
Medium Soil	Soil moisture medium	Soil moisture wet NH^3 or liquid application	Soil moisture dry NH^3 or liquid application Worn Point adjustment
Heavy Soil	Soil moisture dry	Soil moisture wet NH^3 or liquid application	Not recommended Worn Point adjustment

Opener Adjustments (Double Shoot Boots) - Continued

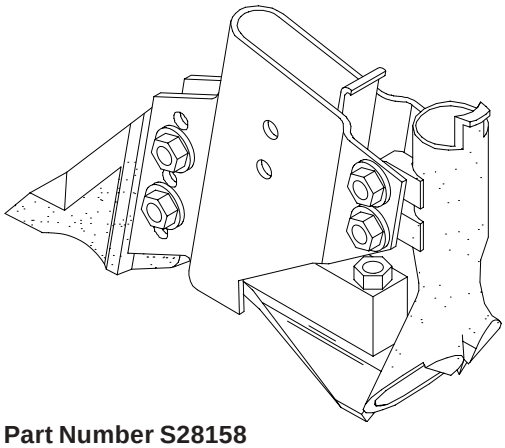

Part Number S28158

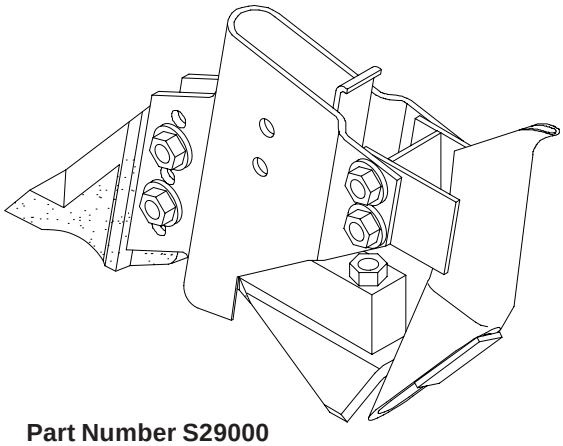

Part Number S29000

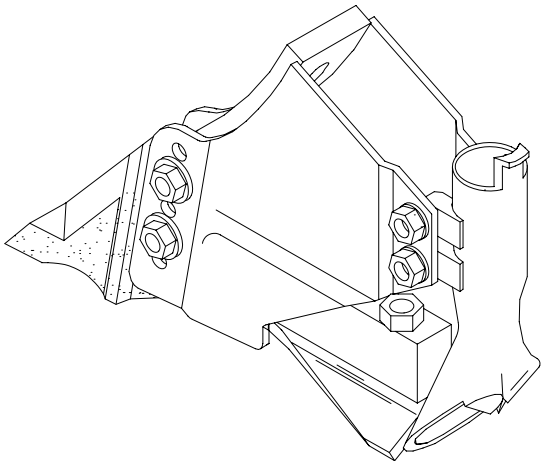

Part Number S25962

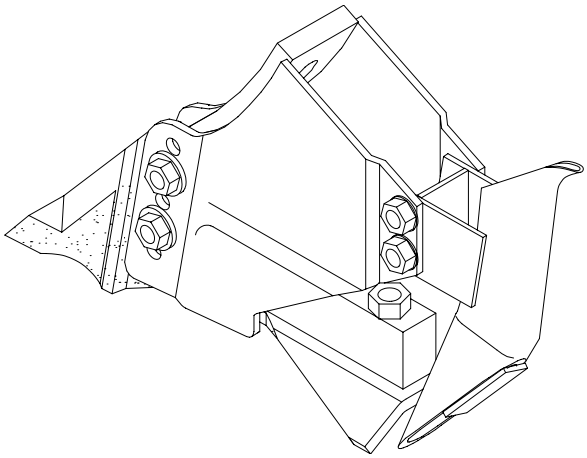

Part Number S29140

Important

Re-tighten all bolts after initial 10 hours. Check tightness periodically thereafter.

Component Replacement

- Tighten all bolts evenly.
- Drift head of bolts with hammer to seat shoulder of bolt head.
- Re-tighten bolts evenly to specified torque.
  - **3/8” bolts torque to 30 ft. lb. (41 N-m)**
  - **7/16” bolts Grade 8 torque to 70 ft. lb. (95 N-m)**

General Field Operation

- Follow guidelines outlined in *"Operating Guidelines".*
- Switch monitor on.
- Start Fan.

Note: Load sensing hydraulic systems require "*warming up*" before they function smoothly. See *"Hydraulic Fan Drive" for more details.*

- Move forward with seeding tool.
- Engage metering system clutch (MAIN).
- Lower seeding tool into ground.
- Turning at headland: Switch metering system clutch off (MAIN), immediately raise seeding tool fully rephasing hydraulics (see seeding tool manual).
- Once turned engage metering system clutch (MAIN) and lower seeding tool into ground.

Note: Do not attempt to meter product when fan is not running. Damage to the metering wheels may occur.

Note: It takes approximately 15 feet (5 m) of forward travel @6 M.P.H. (10 kph) before product reaches the seed openers.

Clutch Switches

Main

- Controls the main clutch which engages and disengages the ground drive.

Auxiliary

- Controls the optional second clutch.

Granular

- Controls the optional granular tank clutches.

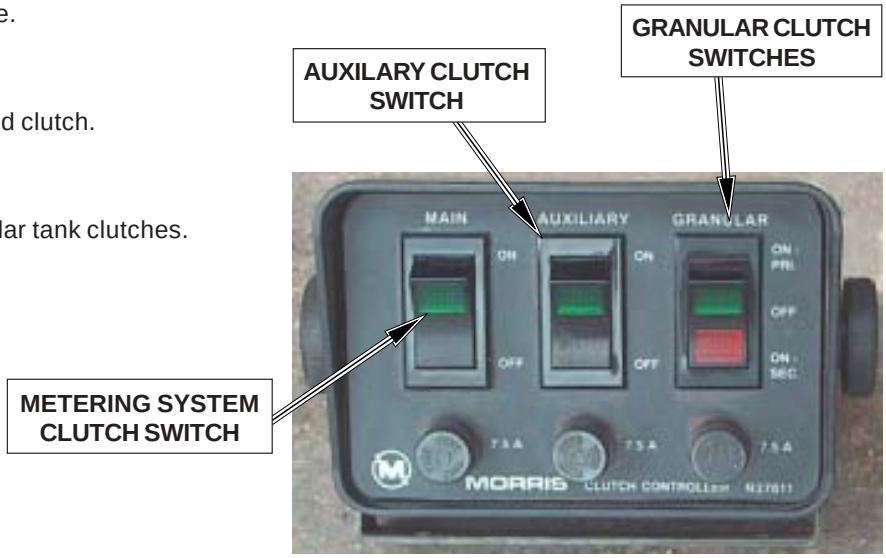

Clutch Switch Console

Notes

Section 6: Monitor

Section Contents

Introduction 6-3
Identifying Monitor Version 6-4
Identifying Monitor Switches 6-6
Identifying Monitor Displays 6-6
- Lower Display 6-6
- Bin Level Indicator 6-6

Preparing Monitor 6-7
Start-up 6-8
- Normal Start-up 6-8
- Special Start-up 6-8
- Start-up Error Messages 6-9
  - First Class 6-9
  - Second Class 6-9

System Installation 6-10
- Sensor LEARN Mode 6-10
- Installation Precautions 6-10
- Installation Procedure 6-11

Monitor Programming 6-12
- Procedure 6-12
- Entering Change Settings Mode 6-12
- Exiting from Change Settings Mode 6-12
- Canola Setting 6-13
- PPM Math Calculation for Version 1 6-15
- Pulse Counting Mode for PPM Version 1 6-15
- PP400 Math Calculation for Version 2 6-16
- Pulse Counting Mode for PP 400 Version 2 6-16

Normal Operation 6-17

Section Contents (continued)

Alarms 6-18
Introduction 6-18
Sensor Alarm Chart 6-19
Bin Level Alarms 6-19
Low Fan Alarms 6-20
Ground Drive (“In Motion”) Alarm 6-20
Regular Blockage Module Alarms - Pin Sensors 6-21
Optical Blockage Module Alarms 6-22
Communication Alarms 6-23
System Error Alarms 6-23
Area Display 6-24
Resetting the Field Acre Meter 6-24
Resetting the Total Acre Meter 6-24
Application Rate Check 6-25
Flow - Pin Sensors 6-27
Introduction 6-27
Test Mode 6-28
Calibration Mode 6-29
Operation Mode 6-30
Flow - Optical Sensors 6-31
Introduction 6-31
Optical Blockage Module Setup 6-31
Flow Function 6-32
Flow Test 6-32
Flow Calibration 6-33
Sensor Replacement 6-34
Sensor Gap Settings 6-34
Reed Switch Sensors 6-34
Variable Reluctance Sensors 6-34
Trouble Shooting Guides 6-35
Checking Harness 6-35
Checking Sensors 6-35
Checking Blockage Modules 6-35

Introduction

The monitor utilizes a multiplexed data communication system to monitor the functions of the Air Cart. In the multiplexed system, all sensors communicate with the monitor on the same three wires.

The system can monitor and display status of the following functions:

- Fan speed
- Ground speed
- Shaft speeds (up to 3)
- Bin levels (up to 3)
- Flow Blockage (up to 192 runs)
- Seed rates & Seed Counts (up to 24 rows)
- Auxiliary bin pressure

An audio alarm will sound upon detection of: low or high fan speed, low shaft speed, low bin level. Also, loss of flow in any runs that are being monitored with Blockage Modules, and low seed rates when seed counting sensors are used also generate alarms. Audio alarms persist until the alarm condition is removed or until the alarm is acknowledged by the operator by pressing the ACK button.

In addition, the monitor can determine and display:

- Field Area
- Total Area
- Application Rate (weight per unit area)

The monitor allows the following settings to be changed:

- High and Low fan speed alarm point
- Ground speed pulses per mile and pulses per revolution
- Pulses per revolution of fan and 3 shafts
- Low bin alarm for 3 bins
- The number of Blockage Modules that are connected to the monitor
- Seed rate alarm points for 9 seed types (Plant)
- The width of the implement
- Display imperial or metric units

The settings listed above, as well as field and accumulated areas, and the total number of seeds planted on the current field, are stored in nonvolatile memory. This means that the information is retained even when power is disconnected.

Two cables exit the rear of the monitor. There is a two wire power cable that connects to the tractor power supply. The other is a three wire cable that brings power and communications to the remote sensors through the main harness.

MONITOR - Version 2 shown

Note: Monitor N27010 has been superseded by monitor N37010. The monitors are interchangeable with some differences in programming and functionality.

CLUTCH SWITCHES

Identifying Monitor Version

Monitor N27010 (Version 1 Series) has been superseded by monitor N37010 (Version 2 Series). The monitors are interchangeable with the exception of the use of radar and optical blockage modules with version 2 only. Refer to chart for complete list of differences between two monitor versions.

Monitor can be identify by the face plate as indicated.

Version 1 - has BIN PRESS

Version 2 - has SPACING, SCAN and MANUAL

Note: On power up the monitor will briefly display the version and software level. (i.e. V1.7)

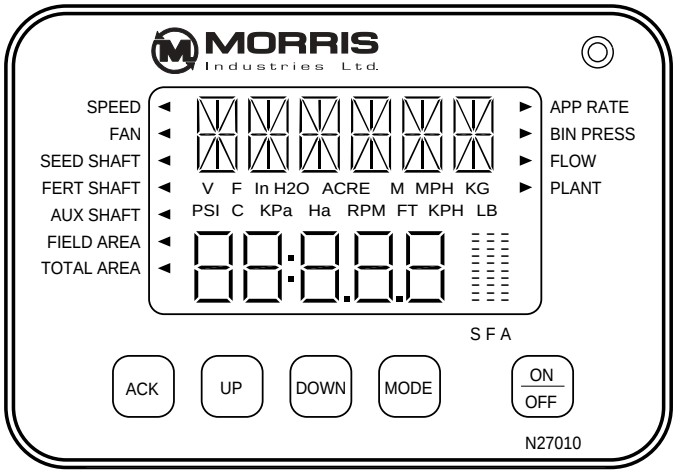

Version 1 Series

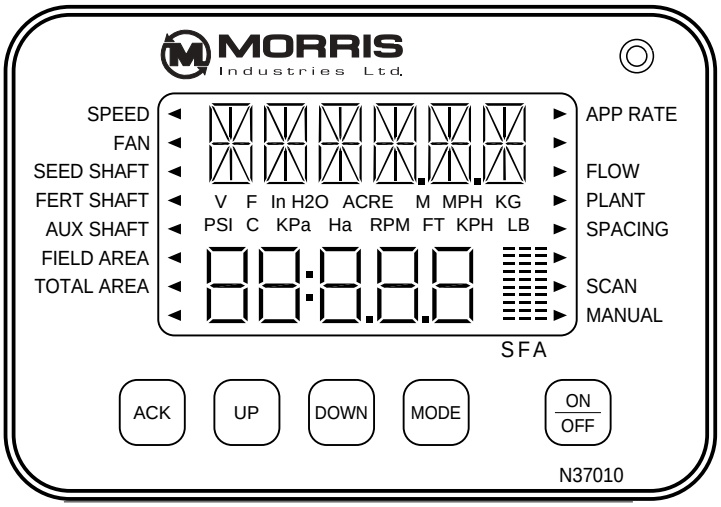

Version 2 Series

Identifying Monitor Version - continued

The following chart is a summary of the differences between version 1 and version 2 monitor.

Hardware Differences

Feature	Version 1	Version 2
Memory	64 kBytes	256 kBytes
Lighting	Backlit display only.	Backlit display and keys.
Radar	No support for RADAR speed sensor.	Hardware input for RADAR speed sensor.

Software Differences

Feature	Version 1	Version 2
Ground speed pulses per mile setting	User enters pulses per mile of travel.	User enters pulses per 400 feet of travel.
Ground Speed Calibration	User enters calibrate mode then drives for one mile and stops. User saves counts.	User enters calibrate mode, starts driving. When passing start point, press mode. When passing end point (400 feet), press mode. User then saves count..
Shaft calibration mode on VAR system	User enters code byte to specify RPM and number of revs.	User chooses desired revs using UP and DOWN keys. Then user chooses desired RPM using UP and DOWN keys.
Application rate calculation on non-VAR system	Ther is no SAVE screen after the application rate is displayed.	There is a SAVE screen after the application rate is displayed.
Bin pressure	There was a display position for bin pressure sensor, but this was not functional	No display position for Bin Pressure sensor.
Flow	Support only for pin sensor type blockage modules.	Support for both pin sensor type blockage modules and optical blockage modules.
Population display	No indication when population display is in either SCAN or MANUAL mode.	There are SCAN and MANUAL indicators to show which mode the population display is in.
Spacing Display	No spacing display.	Displays seed spacing in seeds/ft or inches/seed
Self-Calibration prompt	No prompt.	Prompts for the user to wait while the seed counting sensors and the optical blockage modules do their self-calibration on power-up.
Var Rate screen	No save prompt for the drive and weigh calibration.	Ther is a save prompt for the drive and weigh calibration.
Var Console	In a non-VAR system, still prompts for the var console during the installation.	If no var controller is installed, no var console is prompted for during the installation.
Population display	No ability to set the row spacing.	User can enter the row spacing for the system.

Note: Version 2.3 and above use Shaft 1, Shaft 2, Shaft 3, Tank 1, Tank 2 and Tank 3 instead of Seed Shaft, Fert Shaft, Aux Shaft, S Bin, F Bin and A Bin.

Identifying Monitor Switches

The five push buttons are used for controlling the monitor.

ACK • Acknowledge. Primarily used for acknowledging alarms. Also used for exiting from program mode, resetting area, and accessing some special functions.

UP • Used for moving function selection icon. Also used to increment parameter in program mode.

DOWN • Used for moving function selection icon. Also used for decrementing parameter in program mode.

MODE • Used to enter program mode. Also used for going to next parameter in program mode.

ON/OFF • Used to turn monitor on and off.

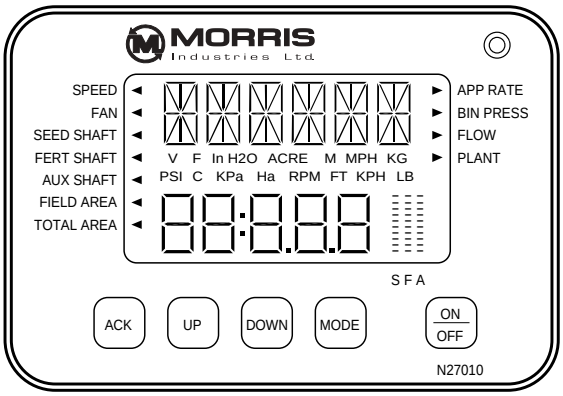

Identifying Monitor Displays

Function Indicators

- The left and right side of the display have triangular icons for indicating the current selected display function.
- These icons will flash when alarm conditions occur for a function.

Upper Display

- Displays the selected function, and alarm conditions.
- This line is also used to give information during monitor programming and initial system installation.

Lower Display

- Displays the reading for the selected function, with the unit of measure displayed above value.
- This line is also used to indicate the parameter value during monitor programming.

Bin Level Indicator

- The bars will flash and the audio alarm will sound when bin level is low.

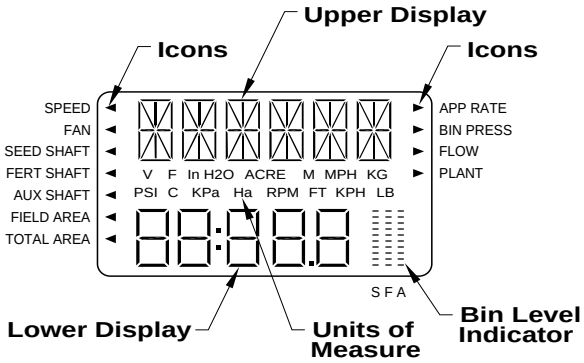

Preparing Monitor

- Locate monitor and clutch switch in a convenient location in cab.
- Connect power cables to a 12 volt power supply source, preferably one that has no power to it when the ignition is turned off.
  - White or Red wires **positive**.
  - Black wires **negative**.
- Route cable harness to seeding tool and air cart. Ensure cables clear any pinch points (i.e. tractor articulation point, hitch point, etc.)
- Program monitor as described in *System Installation* and *Monitor Programming* Sections.

Note: Locate monitor, power and ground wires away from radio and antenna if tractor is so equipped.

Note: Do not connect monitor directly to starter switch.

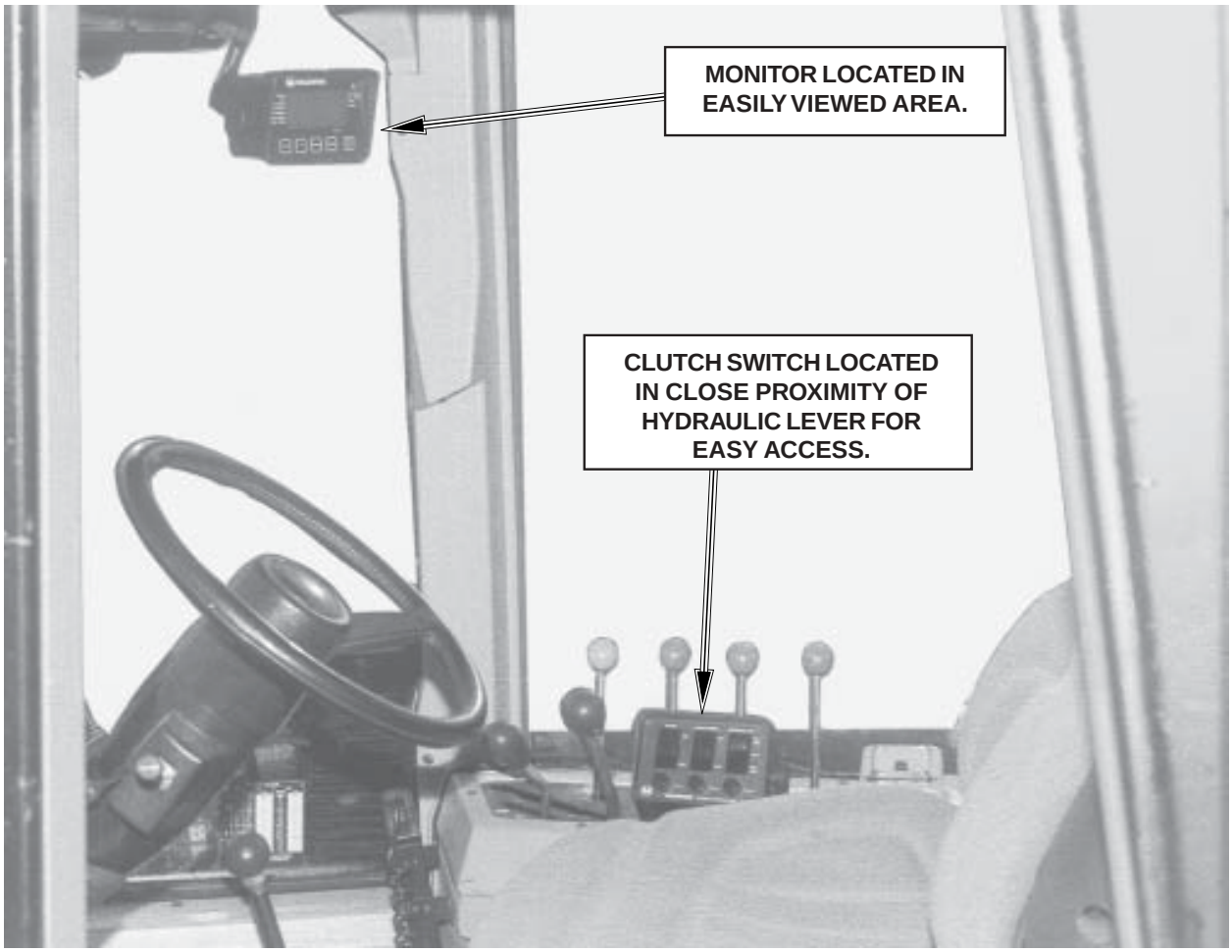

Start-up

Normal Start-up

Normally, when the unit is turned on, the following display sequence takes place:

- All of the display segments turn on one at a time, and then off one at a time.
- MORRIS is briefly displayed.
- The Version/Issue number of the monitor software is displayed. **This number should be included with any reports of faulty or unexpected system operation.**
- The sensor numbers of all previously learned sensors are displayed in sequence as initial communication with each sensor takes place.
- The normal operating display starts with the ground speed function active.
- Once normal operating starts the monitor will alarm specific sensors; in 10 seconds the bins alarm and in 30 seconds the speed alarm. Press the **ACK** key for each alarm, this will cancel the alarms returning the monitor to ready mode.

It may occur that an error is detected on start-up. In that case the sequence is slightly modified as described in the section on Start-up Error Messages.

Monitor ID
Version Number

Special Start-up

There are two types of special actions that can be controlled when starting up the unit.

- **START SENSOR CONFIGURATION LEARN:** This allows a new sensor configuration to be learned, with the existing configuration cleared from memory.
- **RESET SETTING:** All stored settings, such as pulses per revolution values, alarm points, etc. are restored to their factory default values. All areas and seed counts are also zeroed.

The two actions can be selected independently or together by holding down certain key combinations when the unit is turned on, see chart.

Special Startup	
Button Combination	**What Occurs**
ACK and DOWN	FORCED LEARN of all sensors (other settings retained)
ACK and MODE	RESET SETTINGS (sensor configuration retained)
ACK and DOWN and MODE	BOTH FORCED LEARN and RESET SETTINGS

Start-up - continued

Start-up Error Messages

In rare circumstances certain fault conditions may be detected at start-up. There are two distinct classes of such fault conditions and they are reported differently.

First Class

The **first class** is due to faults that occur while the unit was operating and which cause the unit to restart. In this case, the monitor will display the error message instead of the normally displayed MORRIS. It will then wait for a key press before proceeding with the start-up sequence. The possible error messages are:

COPRST, UUORST, CLKMON, and **IMPRST**

Second Class

The **second class** includes various conditions that the monitor checks for after the Version Number is displayed. In most cases, when such conditions are detected the system is forced to do a complete factory reset (as if the monitor were turned on with the ACK, Down and Mode keys all held as described above). The possible displayed messages are:

VERCHG, SNSCHG, EEPCS1, EEPCS2, BDSERP, and **VERCHS**

Note: If any of the error messages appear more than twice, the monitor is probably faulty.

Startup Error Codes

Monitor Display	Display Meaning
VERCHG	Should only be true after installation of new softwre that changes the way nonvolatile memory (on chip EEPROM) is used. Forces a factory reset.
SNSCHG	Should only be true after installation of new softwre that changes the order or composition of the default list of connectable sensors. Forces a factory reset.
EEPCS1 EEPCS2	Some data in the microprocessor nonvolatile memory (EEPROM) is invalid. Data is stored in two banks. The message indicates which bank had the problem. If only the first bank is corrupt, then the good bank 2 copy will be used and there will not be a forced factory reset.
BDSERP	A test of the integrity of the additional nonvolatile memory chip (Serial EEPROM) has failed.
VERCHS	Should only be true after intallation of new software that changes the way nonvolatile memory (Serial EEPROM) is used. Forces a factory reset.

System Installation

Sensor LEARN Mode

The installation procedure is required to configure the monitor to the sensors attached to it.

The operator may have to redo the installation if:

1) A granular applicator is added to the Air Cart.
2) Replacing faulty sensors.
3) Replacing faulty monitor with a new monitor.

Installation Precautions

1) During installation the monitor has a predetermined order in which it wants the sensors attached. The installer must be sure that the proper function is plugged in.
   i.e. If during installation the installer plugs in the Front Shaft and Ground Speed sensors in the wrong order, the monitor would not know this. The monitor would interpret Front Shaft rpm from the Ground Speed shaft and vice versa.
2) There may be occasions when the operator will not have a full complement of sensors. These sensors can be programmed to be ignored in two ways:
   i) During initial installation when the monitor prompts for a sensor to be plugged in, the operator can press **ACK** to skip over the sensor. **The sensor will be assigned a disabled status.** A sensor disabled by this method can only be enabled by repeating the installation procedure.
   ii) During operation the operator can disable sensors by setting the pulses per revolution to zero. When pulses are set to zero alarms for that sensor and corresponding Bin Level sensor are ignored and no monitoring occurs.
3) Blockage modules attached to the harness are handled differently than the sensors attached to the harness. See Assembly Section *"Blockage Module".*

   Pin Sensors - the blockage module **does not have to be removed from the harness** during initial system installation.

   Optical Sensors - the blockage module **have to be removed from the harness** during initial system installation.

Note: Each monitor is unique to the sensors installed. If monitor is moved to another Air Cart it has to be reprogrammed to match the sensors.

Sensor Installation	
Sensor Number	Sensor
1	Ground speed
2	Fan
3	Shaft 1 or (Seed Shaft)
4	Shaft 2 or (Fertilizer Shaft)
5	Shaft 3 or (Auxuilary Shaft)
6	Tank 1 or (Seed Bin)
7	Tank 2 or (Fertilizer Bin)
8	Tank 3 or (Auxuilary Bin)
9	Bin Pressure (Version 1 only)
10	VarCon (Variable Rate) (Version 1 only) (Version 2 calls for installation only if var controller is installed)
11-35	Plant Sensors
36-48	Optical Blockage Modules (Version 2 only)

Version 2.3 and above use Shaft 1, Shaft 2, Shaft 3, Tank 1, Tank 2 and Tank 3.

System Installation - continued

Installation Procedure

- **Disconnect** all the sensors (3 pin connector) from the harness before turning monitor on.
- Hold down both buttons: **ACK-DOWN** and turn on monitor. Continue holding the buttons until **KEYOFF** appears on the display.
- **RELOAD** will be displayed briefly on line 1 when the ACK-DOWN buttons are released. Each sensor must now be individually recognized by the monitor. The monitor will display the order in which the sensors must be plugged in.
- The display on line 1 will alternate between **MISSED** and **SPEED 1**, indicating that the ground speed sensor may now be connected.
- The monitor will give a double beep when it acknowledges the sensor.
- The display on line 1 will now alternate between **MISSED** and **FAN 2**, indicating that the fan sensor may now be connected. Connect the fan sensor.
- The process is the same for rest of the sensors in the sequence.
- When the monitor requests a sensor that **will not be used** in the configuration, press the **ACK** key, and the monitor will skip the sensor and advance to the next one in the sequence.

Note: There are **"24" PLANT SENSORS**. To skip past the plant sensors press **ACK** and **MODE** buttons together.

- When all sensors in the list have either been learned or skipped, the installation is complete. The monitor automatically advances to its normal operating mode, where the ground speed is displayed. Since the fan and shafts are not rotating, alarms will be soon generated (some are delayed). These will need to be silenced with the **ACK** key.
- To verify the installation, the monitor may be turned off, then turned on again. Now, only the names of the learned (but not the skipped) sensors will quickly flash by on the display as the unit goes through its normal "wake up" sequence, after which it advances to its default operating mode, where the ground speed is displayed.

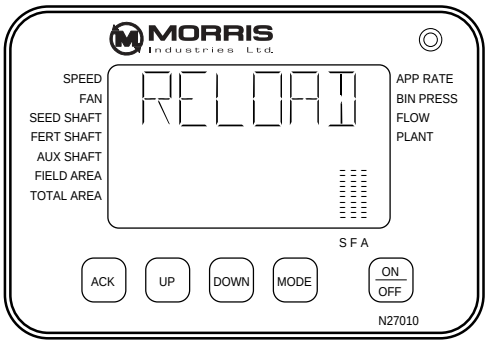

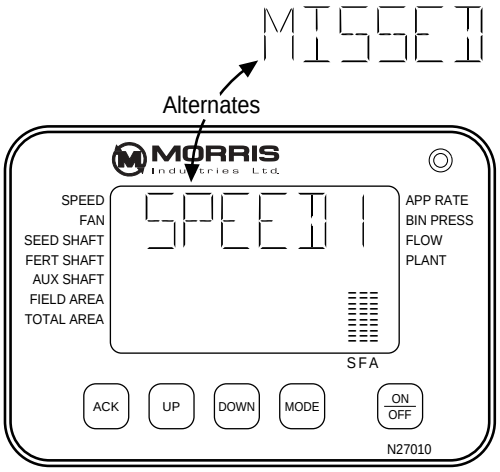

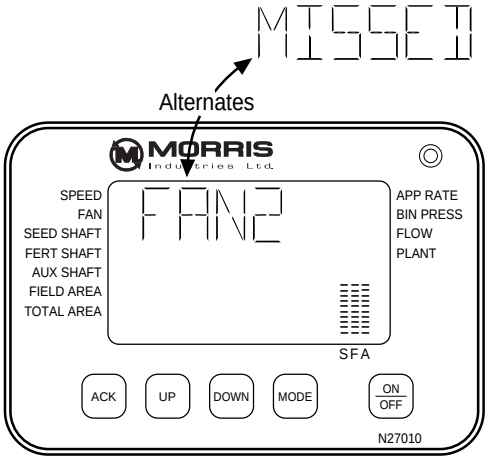

Monitor Programming

Most of the function positions have settings that may be changed. These include various configuration details, alarm trip points, and some convenient options such as whether imperial or metric units should be used for numeric display.

Procedure

The following explains the procedure for entering and exiting any of the Change Settings modes.

Saved settings are retained even after power has been removed from the monitor.

Note: When the operator is in any of the *"change settings"* modes, the monitor will not generate normal monitor alarms (low fan speed, shaft speed and so on).

Entering Change Settings Mode

- Use the UP or DOWN button to move the triangle icon to desired function.
- Hold the MODE button until 4 short beeps and 1 long beep sounds. Release button after the long beep. This starts the change settings mode.
- Display line 1 will show a description of what the setting is.
- Display line 2 will indicate the present numeric value of the setting. An appropriate unit is also indicated.
- Now, each press of the MODE button will advance the display to the next settable item for that function, cycling back to the first one after reaching the end. The last display in the cycle is the save prompt, which allows the user to decide whether settings should be saved into memory.

Exiting from Change Settings Mode

- Press MODE button until the **SAVE** display appears on display line 1.
- If settings should be saved, press UP to choose yes (Y). Then hold down ACK button until 4 short beeps and 1 long beep sounds. Release button after the long beep.
- If settings should not be saved (but remain as they were before the mode started) press DOWN to choose no (N). Then press ACK button, which immediately exits Change Settings Mode.

See charts on following pages for monitor program settings.

PPM / PP400				
Tire Size (Good-Year)	**Tire Style**	**Rating**	**PPM**	**PP400**
16.5L x 16.1	Softrac II	6 ply	6816	516
	Sure Grip Traction	6 ply	6576	498
21.5L x 16.1	Softrac II	6 ply	6008	455
	Sure Grip Traction	8 ply	5958	451
	Softrac II	10 ply	6008	455
	Sure Grip Traction	12 ply	5958	451
18.4L x 26	AWT (Implement)	10 ply	4770	361
23.1L x 26	AWT (Implement)	8 ply	4504	341
	TD8 Sure Grip	10 ply	4096	310
	AWT (Implement)	12 ply	4504	341

Note: To *"TURN OFF"* any shaft not in use set pulses to 0. This will eliminate any nuisance alarms caused by an inactive shaft.

Monitor Programming - continued

Base Monitor Programing

MONITOR FUNCTION	PRESS BUTTON	Display Upper	Display Lower	PRESS BUTTON	Display Upper	Display Lower	PRESS BUTTON	Display Upper	Display Lower	PRESS BUTTON	Display Upper	PRESS BUTTON
	Hold for five beeps 4 short and 1 long beep		Set with UP/DOWN buttons			Set with UP/DOWN buttons			Set with UP/DOWN buttons		Set with UP/DOWN buttons	Hold for five beeps 4 short and 1 long beep
SPEED	MODE	PPM PP400	* See Chart PPM/PP400	MODE	PPR	4	MODE				SAVE Y	ACK
FAN	MODE	PULSES	2	MODE	LO FAN	3000	MODE	HI FAN	5000	MODE	SAVE Y	ACK
SHAFT 1 (SEED)	MODE	PULSES	4	MODE	LEVEL	20	MODE				SAVE Y	ACK
SHAFT 2 (FERT)	MODE	PULSES	2	MODE	LEVEL	20	MODE				SAVE Y	ACK
SHAFT 3 (AUX)	MODE	PULSES	0	MODE	LEVEL	20	MODE				SAVE Y	ACK
FIELD AREA or TOTAL AREA	MODE	WIDTH	Seed Tool Width	MODE	UNITS	0-Imperial or 1-Metric	MODE				SAVE Y	ACK
APP RATE												
BIN PRESS Version 1												
FLOW	MODE	BOXES	0	MODE	TYPE	0	MODE				SAVE Y	ACK
PLANT Version 1	MODE	SDTYPE	1	MODE	SEEDRT	0	MODE				SAVE Y	ACK
PLANT Version 2	MODE	SDTYPE	1	MODE	SEEDRT	15000	MODE	RSPACE	7.5	MODE	SAVE Y	ACK
SPACE Version 2	MODE	SELECT	0	MODE							SAVE Y	ACK

Note: Air Carts equipped with Granular Tank or Third Tank, Auxiliary Shaft *pulse setting* must be set to 4 not 0.

Canola Setting

Low application rates of Canola may cause the seed shaft to rotate less than 2 rpm.

The low shaft rpm will cause the monitor to give a false seed shaft alarm, since the shaft is rotating below the alarm threshold of 2 rpm.

To avoid this nuisance alarm change the seed shaft pulse setting from 4 to 1, the monitor will think the shaft rpm is 4 times what it actually is.

Example: Actual Seed Shaft rpm is 5.

Monitor set at **4 pulses** will read a seed shaft rpm of **5**.

Monitor set at **1 pulses** will read a seed shaft rpm of **20**.

Note: Change the pulse setting back to 4 when returning to higher application rates.

Monitor Programming - continued

When an Air Cart is equipped with a granular tank, blockage modules, or plant counter the settings listed in the Monitor Options Programming chart must be used.

Note: To *"TURN OFF"* any shaft not in use set pulses to 0. This will eliminate any nuisance alarms caused by an inactive shaft.

Monitor Options Programing

MONITOR FUNCTION	PRESS BUTTON	Display Upper	Display Lower	PRESS BUTTON	Display Upper	Display Lower	PRESS BUTTON	Display Upper	Display Lower	PRESS BUTTON	Display Upper	PRESS BUTTON
	Hold for five beeps (4 short and 1 long beep)		Set with UP / DOWN buttons			Set with UP / DOWN buttons			Set with UP / DOWN buttons		Set with UP / DOWN buttons	Hold for five beeps (4 short and 1 long beep)
AUX SHAFT 3	MODE	PULSES	4	MODE	LEVEL	20	MODE				SAVE Y	ACK
FLOW Pin Version 1 or 2	MODE	BOXES	Number of Blockage modes used	MODE	TYPE	0	MODE				SAVE Y	ACK
FLOW Optical Version 2 only	MODE	INSTAL	Y	MODE	M01R--	Set number of runs for module	MODE (Will run through all blockage Modules)	M02R-- to M12R--	Set number of runs for module	MODE	SAVE Y	ACK
PLANT Version 1	MODE	SDTYPE	1 - 9	MODE	SEEDRT	15000 - 35000	MODE				SAVE Y	ACK
PLANT Version 2	MODE	SDTYPE	1 - 9	MODE	SEEDRT	15000 - 35000	MODE	RSPACE	0.1 - 99.9	MODE	SAVE Y	ACK
SPACE Version 2	MODE	SELECT	0 - seeds/foot or seeds/meter 1- inches/seed or cm/seed							MODE	SAVE Y	ACK

Monitor Programming - continued

PPM Math Calculation for Version 1

To determine PPM value, first determine the tire circumference as outlined in *"Determining Tire Sprocket"* under Operation Section.

Note: The PPM can also more accurately be calculated with the use of the monitor pulse counting mode.

Note: The values used for PPM values and sprockets is based upon the tire circumference of Good-Year tires at proper pressure with half full tanks in normal working field conditions. (They are all based in reference to 16.5L x 16.1 tires.

$$\text{New PPM Value} = \left(\frac{109''}{\text{New Tire Circumferenace}}\right) \times 6816$$

$$\text{New PPM Value} = \left(\frac{2.7686\ \text{m}}{\text{New Tire Circumferenace}}\right) \times 6816$$

Pulse Counting Mode for PPM Version 1

If the operator does not know what the pulses per mile should be, or, if more accuracy is desired for present levels of tire inflation or soil conditions, the monitor can be put into Pulse Counting Mode, in which the number of pulses associated with one mile of driving are determined.

To start the Pulse Counting Mode:

- Measure and mark out 1/10 mile (528 feet) (160.9344 m).
- Select the SPEED position.
- Hold down the ACK key until after the long beep.
- Display line 1 will show COUNT and the bottom line will show "0".
- Drive distance and the monitor will count the number of pulses.
- Take that number and multiply by "10" - use up button and scroll to revised number as pulses per mile.
- To save the count, select Y and then press and hold down ACK button until 4 short beeps and 1 long beep sounds. Release button after the long beep.

Note: The monitor can accept PPM values from 500 to 9999. Therefore, if the new count is less than 500, the existing count is not replaced.

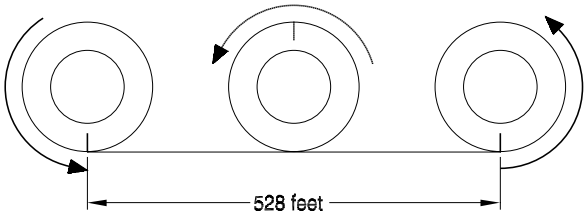

Monitor Programming - continued

PP400 Math Calculation for Version 2

To determine PP400 value, first determine the tire circumference as outlined in *"Determining Tire Sprocket"* under Operation Section.

Note: The PP400 can also more accurately be calculated with the use of the monitor pulse counting mode.

$$\text{New PP400 Value} = \left(\frac{109''}{\text{New Tire Circumferenace}}\right) \times 516$$

$$\text{New PP400 Value} = \left(\frac{2.7686\ \text{m}}{\text{New Tire Circumferenace}}\right) \times 516$$

Pulse Counting Mode for PP 400 Version 2

If the operator does not know what the pulses per 400 feet should be, or, if more accuracy is desired for present levels of tire inflation or soil conditions, the monitor can be put into Pulse Counting mode, in which the number of pulses associated with 400 feet of driving are determined.

To start the Pulse Counting Mode:

- Measure and mark out 400 feet (121.92 m).
- Select the SPEED position.
- Hold down the ACK key until after the long beep.
- Display line 1 will show START.
- To start the monitor counting the pulses, the MODE key must be pressed.
- Display line 1 will show COUNT and the bottom line will show "0".
- Drive distance and the monitor will count the number of pulses.
- When the 400 feet has been driven, the operator can press the MODE key once again to stop the pulse counting. This will bring up the SAVE screen.
- To save the count, select Y and then press and hold down ACK button until 4 short beeps and 1 long beep sounds. Release button after the long beep.

Note: The monitor can accept PP400 values from 50 to 1000. Therefore, if the new count is less than 50, the existing count is not replaced.

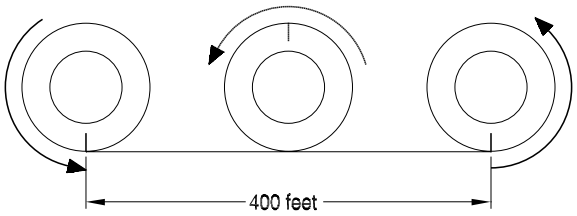

Normal Operation

The text on either side of the display shows the names of all display functions on the monitor. A particular installation, however, might not use them all (such as installations without the third shaft/bin, or which do not have the FLOW option).

The operator controls which function will be active using the UP and DOWN buttons. The triangular indicator will indicate which function is active. A name will also appear on Line 1.

The numeric value for the selected function is displayed on line 2 unless that function is disabled, in which case line 2 will display OFF.

The unit of measurement for the displayed number is indicated in the units area of the display.

Following is a summary of what is displayed on line 2 for each function. Some functions are discussed later in more detail.

Note: Monitor will not function if the system installation (Sensor Learn Mode) was not completed. *See Sensor Installation.*

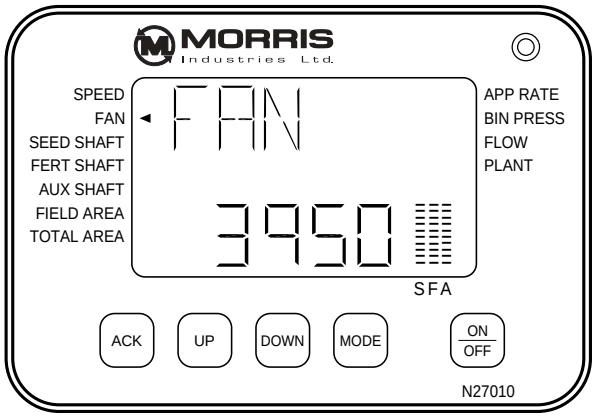

MONITOR FUNCTION	LINE 1 TEXT	WHAT APPEARS ON LINE 2
SPEED	SPEED	Ground speed in MPH or KPH
FAN	FAN	Fan speed in RPM
(SEED) SHAFT 1	SHAFT 1 (SSHAFT)	Shaft speed of the named metering shaft in RPM
(FERT) SHAFT 2	SHAFT 2 (FSHAFT)	
(AUX) SHAFT 3	SHAFT 3 (ASHAFT)	
FIELD AREA	F AREA	Area covered while seeding, in ACRES or HECTARES, since the last time the counter was zeroed. The FIELD counter can be cleared alone; clearing TOTAL clears FIELD also.
TOTAL AREA	T AREA	
APP RATE	APRATE	Determined application rate in pounds/acre or kg/hectare. Shows 0 after powerup until the procedure is done. More detail found in section on Application Rate.
BIN PRESS - Version 1	BPRESS	Pressure in the auxilliary bin in Inches of H2O, or KPa
FLOW	FLOW	OPEN if all runs are clear, or cycles through diplay of all blocked runs with format "MmmRrr", where mm=module address, rr=run number. More detail found in Flow section.
PLANT - Version 1	AVERAT	Seed Rates or Seed Counts. In either case, for a single run, averaged over all runs, or for the run with the minimum or maximum rate or count. Operator chooses what is shown. More detail found in section on the planter option.
	RAT	
	MIN, MAX	
PLANT - Version 2	AVG	Seed Rates or Seed Counts. In either case, for a single run, averaged over all runs, or for the run with the minimum or maximum rate or count. Operator chooses what is shown. More detail found in section on the planter option.
	RAT	
	MIN, MAX	
SPACE - Version 2	AVG	Number of seeds planter per distance unit or distance between speeds planted for a single run, averaged over all the runs or for the run with the minimum or the maximum rate.
	S/M (IN/S)	
	MIN, MAX	

Alarms

Introduction

All configured sensors and various other operating conditions are continuously monitored. Alarms fall into one of the following three categories:

- **Sensor alarms** are alarms which are generated when information returned by a sensor exceeds the appropriate threshold.
- **Communication alarms** occur when a sensor repeatedly does not respond to attempts at communication.
- **System alarms** are for various other conditions that are found to be in fault.

When an alarm condition occurs the monitor will beep repeatedly, the indicator icon for the function will flash, and line 1 will indicate the fault condition.

The alarms persist until the alarm condition is removed or until the alarm is acknowledged by the operator. To acknowledge the alarm the ACK button must be pressed, which (if there are no other alarms pending) results in the silencing of the beeper and the return of the normal display. An exception to this is with low fan alarms, as is explained later. After acknowledgement, the indicator icon (or the upper portion of the bar graph in the case of bin level alarms) will continue to flash for as long as the alarm condition is present.

Note: If the monitor is in the *"change settings"* mode, no alarms will be generated.

When the alarm condition is corrected, the alarm indicators are removed resuming normal operation.

If more than one alarm condition occurs at the same time, pushing the ACK button will acknowledge each alarm in order of priority. Line 1 will indicate the highest priority alarm that has yet to be acknowledged.

The order of alarm priority is: High fan rpm, Low fan rpm, Seed shaft rpm, Fertilizer shaft rpm, Auxiliary shaft rpm, Grain flow, Seed bin low, Fertilizer bin low, and Auxiliary bin low.

When multiple alarms have been acknowledged, the function indicators for the alarmed functions will continue to flash.

Note: To *"TURN OFF"* any shaft not in use set pulses to 0. This will eliminate any nuisance alarms caused by an inactive shaft.

Alarms - continued

Sensor Alarm Chart

The following chart shows alarms which are generated when alarm thresholds are exceeded. Alarm points for some sensors are fixed, while others can be changed by the user.

Sensor Alarm Priority		
Monitor Display	**Display Meaning**	**Alarm Point**
FAN	Fan Speed Too Low or Fan Speed Too High	May be changed by Operator
SHAFT 1 (S SHAFT)	Shaft 1 (Seed Shaft) Rotation Too Slow	Fixed 2 RPM or less
SHAFT 2 (F SHAFT)	Shaft 2 (Fertilizer Shaft) Rotation Too Slow	
SHAFT 3 (A SHAFT)	Shaft 3 (Auxiliary Shaft) Rotation Too Slow	
FLOW	Loss of Seed Flow (Blockage Module Option)	Set by calibration process
TANK 1 (S BIN)	TANK 1 (Seed Bin) Low Level	Fixed
TANK 2 (F BIN)	TANK 2 (Fertilizer Bin) Low Level	
TANK 3 (A BIN)	TANK 3 (Auxiliary Bin) Low Level	
SPEED	Ground Speed below 2 mph	Fixed
CLUTCH	Clutch not engaged	
	Low Seed Rate (Seed Counting Option)	Adjustable alarm point
	Auxiliary Bin Pressure	Fixed

When an alarm condition arises, the beeper will sound, the appropriate triangular indicator will flash, and Line 1 will indicate the fault condition.

To prevent nuisance alarms during setup, while the unit is in any of the special modes, none of the ordinary sensor type alarms will be generated. The special modes include Change Settings mode, Application Rate mode, Pulses Per Mile Count mode, Flow Test and Calibration modes and so on (basically, any mode of operation that is initiated by holding down a button for 5 beeps).

Bin Level Alarms

Bin level alarms use the bar graphs and so are an exception to the above. There is still a Line 1 message and beeping, but instead of a triangular indicator the bar itself indicates the alarm. The lower portion of the bar remains solid, while the upper portion will flash.

Alarms - continued

Sensor Alarms - continued

Low Fan Alarms

Low fan alarms are treated specially because a stopped fan can result in damage to the metering mechanics as unblown material accumulates. **Low fan alarms can not be acknowledged with the ACK button while the system is "in motion".** If a low fan alarm occurs while the system is not in motion, the normal rules apply, and the user will be able to silence the alarm with the ACK key. (The "in motion") condition means that the monitor, based on ground speed and clutch state, considers that the system is supposed to be actively seeding.) Thus, if a low fan alarm occurs during active seeding, the user will **not be able** to silence the alarm with the ACK key, but will need to stop the vehicle or disengage the clutch. When this happens, the monitor accepts it as an acknowledgement of the alarm, and an effective "automatic acknowledge" takes place, resulting in the beeper being silenced and the resumption of normal display.

Ground Drive ("In Motion") Alarm

The monitor emits a double beep whenever the "In Motion" condition becomes freshly true or false. This condition is defined as *speed greater than 2 M.P.H. (3.2 Kph)* and *drive clutch engaged.*

If ground speed is less than 2 mph (3.2 Kph) for more than 30 seconds the monitor will alarm and display SPEED on line 1.

If ground speed is greater than 2 mph (3.2 Kph) for more than 30 seconds and clutch is not engaged the monitor will alarm and display CLUTCH on line 1.

Note: There is no visual display associated with this feature. It is only intended to inform the operator that the clutch is operating properly.

Alarms - continued

Sensor Alarms - continued

Flow (Blockage Module) Alarms

Regular Blockage Module Alarms - Pin Sensors

If a flow blockage occurs, a fault message 'FLOW' appears on line 1. (See Diagram 11) The operator must select the FLOW function to see the error.

There are two types of flow alarms. There can be seed flow alarms or communication error alarms.

The format for the seed flow alarms is 'MxxRyy'. (See Diagram 12) The 'M' indicates module and the 'xx' represents the blockage module number. The 'R' indicates run and the 'yy' is the seed run that has a blockage.

The format for the communication error alarms is **BLK ERR** will be displayed on line 1. (Diagram 13) The module number where the communication failure has occurred will be displayed on line 2. (Diagram 13) This fault is probably caused by an improper connection of the 3-wire system, or is a result of one or more modules having an incorrect address switch setting.

If communication errors are occurring and no blockage modules are connected, the monitor must be programmed to disable the flow monitoring function. This is done by setting the Blockage Module complement equal to zero.

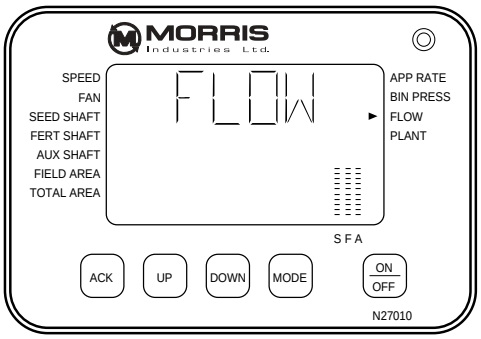

Diagram 11

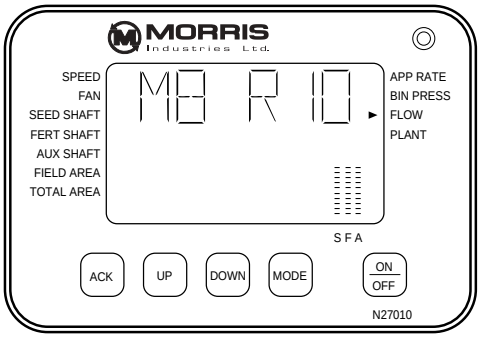

Diagram 12

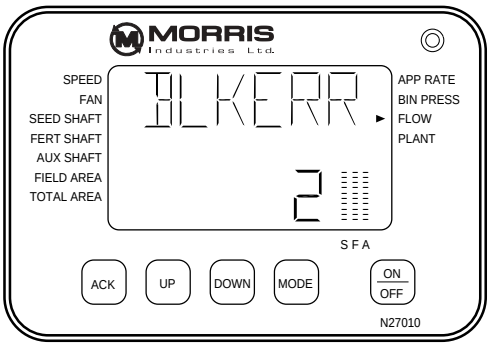

Diagram 13

Alarms - continued

Sensor Alarms - continued

Optical Blockage Module Alarms

If the run does not pass the self-test mode, the blockage module will reports that run is bad. Sometimes this will happen if there is too much light shinning in the seed tube where the run sensor is positioned. This alarm by itself does not mean that the sensor is not working correctly.

During planting, if the blockage monitor does not see any seeds from a run sensor, it will report to the monitor that the run is blocked.

If a run is reported to be bad and blocked at the same time, the monitor will alert the user by saying "*BLOCK". If the run is in this condition and the run is not blocked, and there are seeds flowing in that tube, that means that the sensor is not working. It should then be replaced.

The alarms can be silenced with the ACK key.

Optical Blockage Alarms		
Blockage module alarm		**Meaning**
Line 1	Line 2	
BAD	Run number (*)	Run failed self-test. May be due to too much light getting in the tube.
BLOCK	Run number (*)	The sensor has stopped seeing seeds. Clean out the blockage.
*BLOCK	Run number (*)	The sensor failed self-test and has stopped seeing seeds. If there is no blockage in the tube, the sensor may have stopped working properly.

(*) the numbering of the runs begins with module 1 and continues on through the last module.

Alarms - continued

Sensor Alarms - continued

Communication Alarms

Communication Alarms occur when a sensor does not respond to repeated attempts at communication by the monitor.

- The monitor display will alternate between COMERR and SENSOR NAME on line 1.
- The monitor will display the SENSOR ID NUMBER on line 2.

After acknowledgement, the operator is reminded of which sensor is in fault by the blinking of the associated triangular indicator (or in the case of bin level sensors, the associated bar graph).

The display is slightly different when the communication fault is with a Blockage Module, as described under Flow (Blockage Module) Alarms.

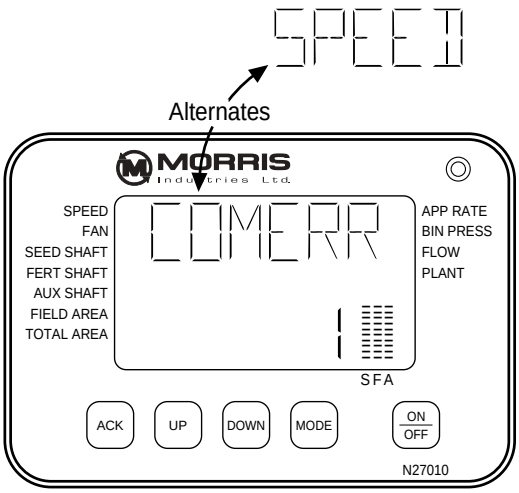

Note: If no blockage modules are connected, the number of modules ("BOXES") should be set to zero. This will prevent nuisance communication alarms.

System Error Alarms

System errors are displayed with "SYSERR' on line 1, and an error code on line 2. The conditions that are monitored, along with their corresponding error codes are listed in the table.

Line shorts must be located and fixed before normal operation will resume.

System Error Codes

Monitor Display	Display Meaning
100	Data Line is Shorted Low (Usually a short to ground)
101	Data Line is Shorted High (Usually a short to +12V)
102	Transmitted Byte Not Also Recieved

Area Display

There are two area counters, field area and total area. They are both accumulated whenever the system “in motion” condition is true, with one exception: when the system is in Application Rate mode, these area counters are not active. Area counts are stored in memory when the unit is turned off.

The counts are displayed by moving the triangle icon with the UP or DOWN button to the desired function. The FIELD AREA is displayed to the nearest tenth of an acre (or hectare) and the TOTAL AREA is displayed with no decimal. The appropriate unit icon (acres or hectares) is turned on.

Resetting the Field Acre Meter

- Use the UP or DOWN button to move the triangle icon to FIELD AREA. (Diagram 27)
- Hold the ACK button until 4 short beeps and 1 long beep sounds. Release button after the long beep.
- The field area will be reset to zero.

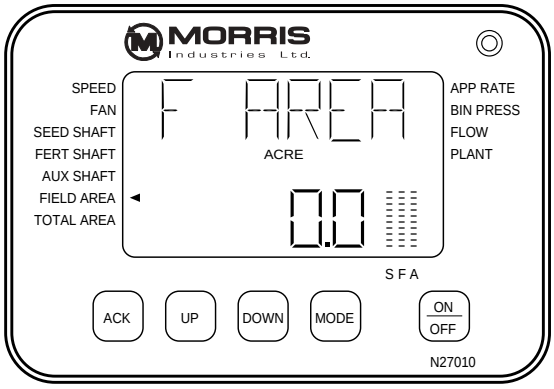

Resetting the Total Acre Meter

- Use the UP or DOWN button to move the triangle icon to TOTAL AREA. (Diagram 28)
- Hold the ACK button until 4 short beeps and 1 long beep sounds. Release button after the long beep.
- The total area will be reset to zero.

Note: Field area will also be reset to zero when total area is reset.

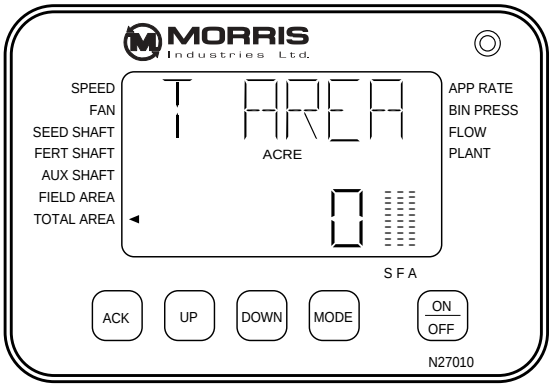

Application Rate Check

The application rate function allows the operator a simple method for performing application rate calculations. When in application rate mode, the operator must move the Air Cart over a distance, where the seeded material must be collected. The material is weighed. The weight is entered into the monitor and the monitor calculates the application rate.

- Remove the wing nuts on the collector bottom.
- Remove the bottom of the collector.
- Remove the metering chain from the transmission that is **not** being checked.
- Check that the desired rate change sprocket is installed in the transmission.
- Turn the crank until material begins to fall through the collector body.
- Slide rate check box on the collector body.
- Use the UP or DOWN button to move the triangle icon to **APP RAT** (See Diagram 1). Line 2 will display the last application rate calculated. ***This is just the last calculation, it may not be the current application rate.***
- Hold the mode button until 4 short beeps and 1 long beep sounds. Release button after the long beep.
- The word **AREA** will be displayed on line 1. (See Diagram 2)
- The actual area will be displayed on line 2. The display will show 0.00 on line 2 when the mode is first entered.

Note: Because this is a special mode, the normal Field and Total acre counters are not incremented at this time.

- Engage the electric clutch. ***Ensure the fan is not running.***
- Drive the tractor forward until the display reads at least 1/10 acre (0.1) on line 2. (See Diagram 3)

Note: Less than 1/10 acre maybe required to ensure higher application rate does not over fill sample collector. If sample plugs collector bottom, damage to metering wheels may occur. Plus the sample collected will be inaccurate.

- Disengage the electric clutch and stop the tractor.
- Remove sample collector.

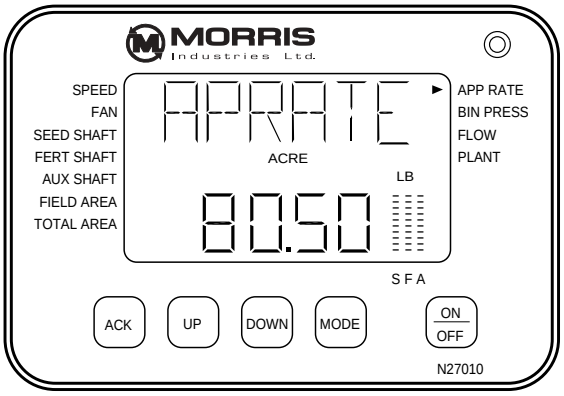

Diagram 1

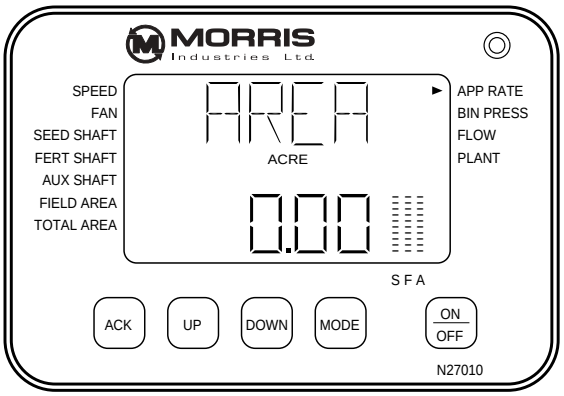

Diagram 2

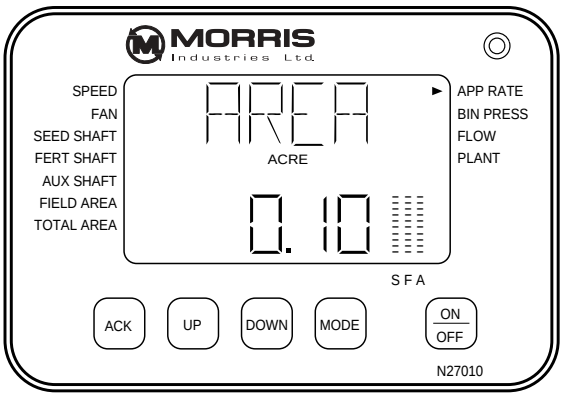

Diagram 3

Application Rate Check - continued

- Weigh the sample by using tarp straps to hook rate check box to spring scale.

Note: Remember to subtract the weight of the rate check box from the total sample weight.

- Press the mode button.
- The word **WEIGHT** will be displayed on line 1. (See Diagram 4)
- Enter the weight of the collected material on line 2 using the UP or DOWN buttons.
- Press the mode button.
- The word **RATE** will be displayed on line 1. (See Diagram 5)
- The calculated application rate will be displayed on line 2.
- Check this rate against rate required. If a different rate is required then increase or decrease the size of the rate change sprocket. Increasing the sprocket size will increase the rate and vice versa.
- To exit the application rate mode, press the ACK button until 4 short beeps and 1 long beep sounds.
- Replace the bottom of the collector.
- Follow the above procedure to check the rate of the other tank.

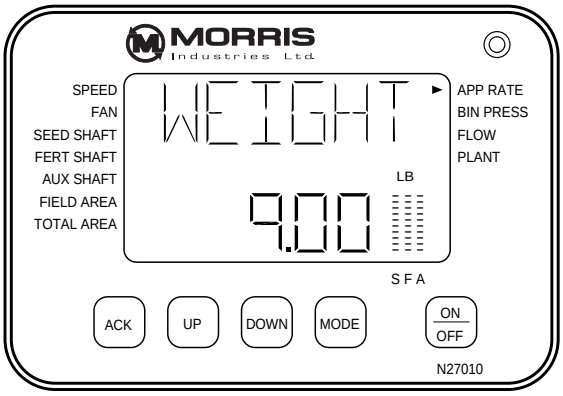

Diagram 4

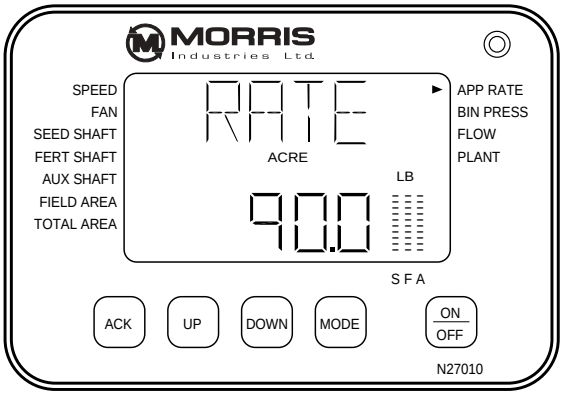

Diagram 5

Note: When in application rate mode, the field and total acres are not altered.

Flow - Pin Sensors

Introduction

There are three modes of operation for the grain flow monitoring system. These are Operate, Test, and Calibrate. Normally, the system is in Operate mode, in which all modules are being monitored for blockage, and blockages cause monitor alarms. Test and Calibrate are special modes which are performed after the first installation and also possibly when the configuration, the normal seed rate, or the type of seed being used changes. The following sections describe each mode in the order that they would be used in a new installation.

Setting Flow Parameters

The number of blockage modules connected must be set at the Monitor console in order for the system to operate correctly. This should only need to be done when the blockage modules are first installed, and afterwards only if the number of blockage modules is changed. Refer to monitor programming.

Test Mode

This mode of operation is used to verify a correct installation. It allows the user to see whether all installed blockage modules are in fact communicating with the monitor, and whether the number of runs set for each blockage module are correct.

Calibration Mode

Calibration mode is used to measure the typical seed flow rate as determined by seed type and the Air Cart settings (i.e. metering rate, fan rpm etc.). The blockage module determines a calibration value and uses it to determine when a run has blocked.

Operation Mode

This is the normal mode of flow monitoring. Now, while the implement is in motion, the monitor will poll each blockage module for the status of its runs.

Note: This will occur regardless of which function on the monitor is presently displayed.

When the FLOW function is active, the display will show one of the following:

FLOW OFF	Indicates the system is set for zero blockage modules connected.
FLOW OPEN	Indicates that all runs are clear.
Mmm Rrr	Indicates which runs are blocked.
BLKERR	Monitor cannot communicate with one or more modules.

Important

***CALIBRATION* must be done each time the seeding rate or the seed type is changed.**

Flow - Pin Sensors - continued

Test Mode

This mode of operation is used to verify a correct installation. It allows the user to see whether all expected blockage modules are in fact communicating with the monitor, and whether the number of runs set for each blockage module are correct.

- Use the UP or DOWN button to move the triangle icon to FLOW. (Diagram 4)
- Hold the ACK button until 4 short beeps and 1 long beep sounds. Release button after the long beep.
- **TEST** or **PASSED** will be displayed on line 1.
- This action puts the system in test mode.

Note: Test mode can only be entered if the unit is stationary.

- The monitor will display on line 2 in cyclical fashion each module's number (*address*) and the number of sensors that, that module is set to monitor. (Diagram 4)
- The operator may now verify that the number of sensors displayed for each module agrees with the individual sensors settings on each module (S1 SENSORS). This number may be different for each module on the system. (Maximum of 12 Sensors)
- Once the monitor has communicated with each module line 1 will display **PASSED**. (Diagram 5)

If there are blockage modules that the monitor is unable to communicate with, then the number of sensors displayed for those modules will be blanked out. If this condition persists for numerous attempts by the monitor, an alarm will occur and **BLK ERR** will be displayed on line 1. (Diagram 5) **BLK ERR** being displayed indicates a blockage module communication failure. The module number where the communication failure has occurred will be displayed on line 2.(Diagram 6) This fault is probably caused by an improper connection of the 3-wire system, or is a result of one or more modules having an incorrect address switch setting. See Assembly Section "*Blockage Module".*

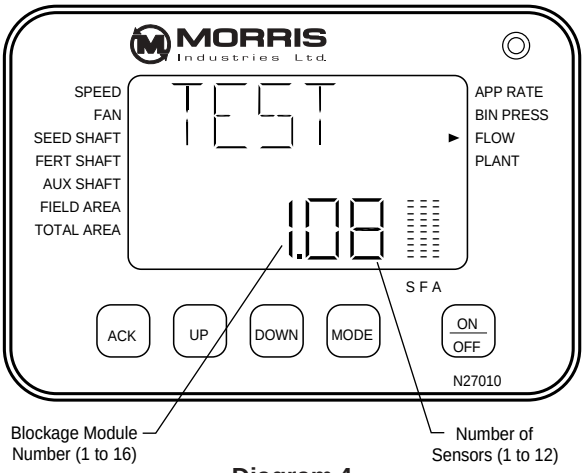

Diagram 4

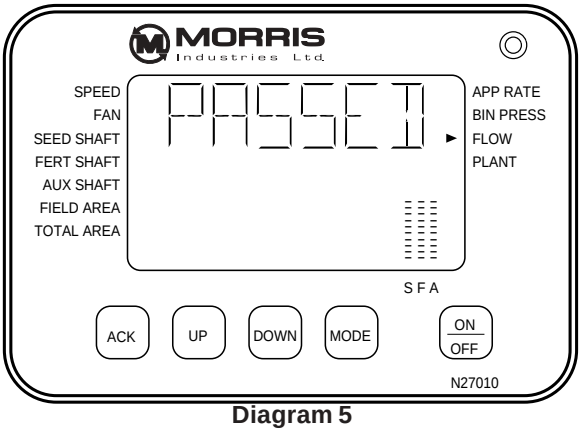

Diagram 5

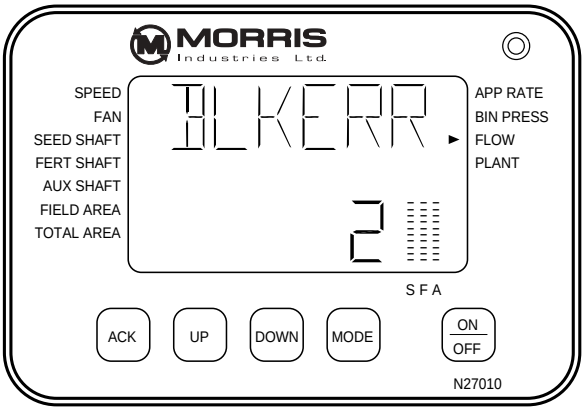

Diagram 6

Flow - Pin Sensors - continued

Calibration Mode

Calibration mode is used to measure the typical seed flow rate as determined by seed type and the Air Cart settings (i.e. metering rate, fan rpm etc.). The blockage module determines a calibration value and uses it to determine when a run has blocked.

Note: Calibration must be done whenever the seeding rate or the seed type is changed

- Use the UP or DOWN button to move the triangle icon to FLOW. (Diagram 4)
- Hold the ACK button until 4 short beeps and 1 long beep sounds. Release button after the long beep.
- **TEST** or **PASSED** will be displayed on line 1.
- Begin normal seeding. When the ground speed is greater than 2 m.p.h. (3 kph), calibration begins with **CAL** being displayed on line 1 (Diagram 7) accompanied by a double beep.

Note: There is a 30 second delay to prevent nuisance alarms occurring.

- Line 2 display will cycle through the blockage module numbers displaying which runs have **not yet calibrated**. (Diagram 7)
- When all runs on a module have calibrated line 2 will display the blockage module number and **--** for the sensors. (Diagram 8)
- When all modules have calibrated, the monitor will beep rapidly several times and display **CAL OK** on line 1.(Diagram 9)
- Exit calibration mode by depressing the ACK button.

Note: Do not exit calibration mode prematurely as any sensors that have not yet been calibrated will generate flow errors.

If it is desired to exit calibration mode prematurely and enter the operation mode, depress the ACK button, until 4 short beeps and 1 long beep sounds. Release button after the long beep.

Important

***CALIBRATION* must be done each time the seeding rate or the seed type is changed.**

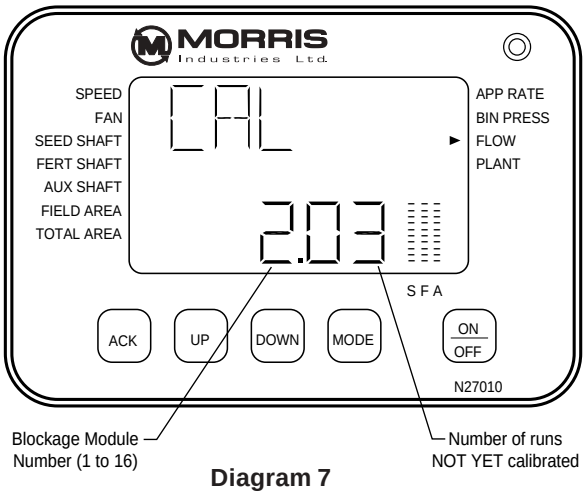

Diagram 7

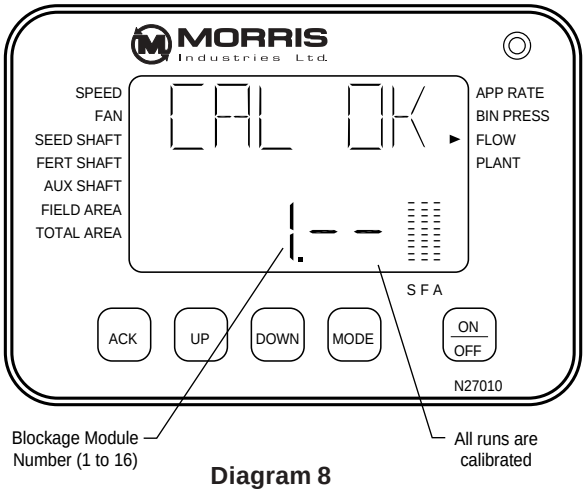

Diagram 8

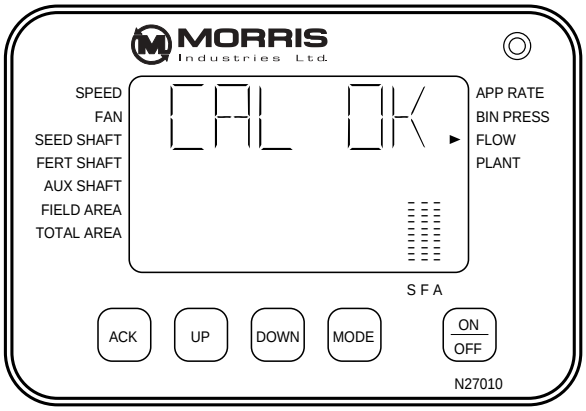

Diagram 9

Flow (Pin Sensors) - continued

Calibration Mode - Continued

Calibration should be completed in approximately two to three minutes of continuous seeding. Any runs that have not calibrated in this time may be blocked and should be cleared. Calibration is suspended when the ground speed is less than 2 m.p.h. (3 kph). This allows the Air Cart to be stopped to clear blocked runs. The calibration procedure will resume when ground speed goes above 2 m.p.h. (3 kph).

Runs that do not calibrate will give flow alarms when normal operation is started, except when all runs for a module do not calibrate. In this special case the module assumes that all of its runs have been intentionally disconnected, so no alarms are required. This feature is useful when an entire section of an Air Cart is not being used.

All calibration data is stored until the next calibration is done (even with power disconnected). This means that if the same conditions are used for seeding, re-calibration is not required.

Note: In double Shoot system sensors in same Module can be installed in seed and fertilizer lines and calibrated for different material flows at same time.

Note: If nuisance alarms occur change the sensitivity of the sensors by recalibrating.

Operation Mode

This is the normal mode of flow monitoring. Now, while the implement is in motion, the monitor will poll each blockage module for the status of its runs.

Note: This will occur regardless of which function on the monitor is presently displayed.

When a blocked run is detected, an audible alarm will sound and an alarm message will be displayed. These will persist until either the alarm is acknowledged using the ACK button or the alarm condition is removed.

When the FLOW function is active, the display will be one of the following:

FLOW OFF Indicates the system is set for zero blockage modules connected.

FLOW OPEN Indicates that all runs are clear.

Mmm Rrr Indicates which runs are blocked. (See Alarms)

BLKERR Monitor cannot communicate with one or more modules. (See Alarms)

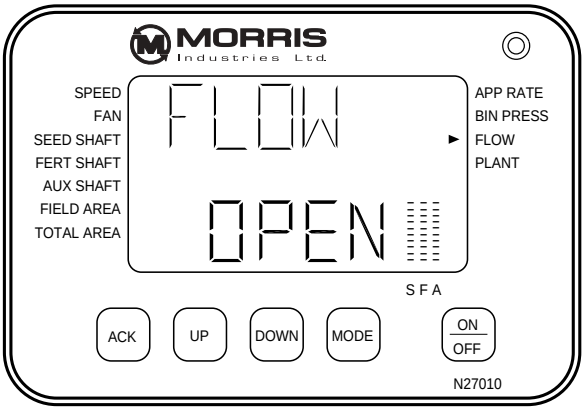

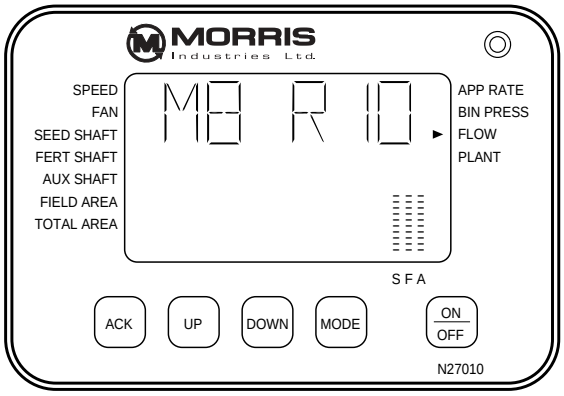

Flow - Optical Sensors

Introduction

The module should be mounted near the location of the sensors to minimize the length of cable between the sensors and the module.

The module should be bolted to a grounded metal surface. There should be a good ground path from the case of the module to the cultivator frame. Mounting the module on an air cart is not recommended. If the module must be mounted on an air cart, a ground wire should be run from the case of the module to the cultivator frame.

Note: Once the module is mounted, it must be learned by the monitor. See the "System Installation".

Optical Blockage Module Setup

The optical blockage module setup mode is different from the norm. The first screen allows the user to select which path to execute. The Install path is selected by choosing "Y" by pressing the UP arrow and then pressing MODE to advance to the next screen. The Setup path is selected by choosing "N" by pressing the DOWN arrow and then pressing MODE to advance to the next screen.

When the runs are connected to the optical blockage module, they must be connected in order - 1, 2, 3, ... Do not skip any runs. When a 8 is entered as the number of runs connected to the blockage module, run numbers 1 to 8 will be monitored.

Important

***CALIBRATION* must be done each time the seeding rate or the seed type is changed.**

Note: It is highly recommended that the Install path is programmed first and then the Setup path.

Install			
Display 1	**Function**	**Limits**	**Comments**
MmmR--(*)	Number of runs connected to module number 1	0 to 16	Default number of runs is 16. MODE advances to the next module. If module is not connected, this number is not used in the monitor.

(*) mm is the module number. Its range is from 1 to 12.

Setup			
Display 1	**Function**	**Limits**	**Comments**
RUN	Enable/Disable individual runs in the system.	1 to the number of runs in the system.	UP/DOWN selects the RUN. The ACK key toggles between Enabling and Disabling an individual run. Mode advances to the SAVE screen. Default state of the runs: Enabled.

Flow (Optical Sensors) - continued

Flow Function

The FLOW function indicates the status of Flow Monitoring based on information from the Blockage Modules. Line 1 will display FLOW. Line 2 will indicate “OPEN” when all monitored runs are clear. When runs are blocked, it will display in cyclical fashion, all blocked runs. See also the section on flow alarms.

The FLOW function supports two special modes, TEST and CALIBRATE.

Important

***CALIBRATION* must be done each time the seeding rate or the seed type is changed.**

Flow Test

This test will inform the user as to how many “good” optical sensors are connected to each module.

At the end of the test, ACK may be pressed to return to normal mode, or the user may start planting and the Calibration will automatically begin.

At any time during this test, ACK may be pressed and held until after the long beep to exit the Flow Test Mode.

Test		
Step	**Action**	**Desired Result (Actual)**
1	Stop the implement.	**Do not** move the implement, or run any seed, during the Flow test.
2	On the FLOW screen, press and hold the ACK key for 5 seconds.	TEST should be shown on line 1. Line 2 will cycle through the module numbers.
3	Wait	This may take a few minutes, depending on configuration and application. Should hear 4 short beeps and the screen should display "TST OK" on line 1. The bottom line will cycle through the various modules connected and display, for that module, the number of **"good" sensors** connected to it. The format of this display is MMr:RR, where MM is the number of the module being reported and RR is the number of valid runs connected to this module. These numbers should correspond to the actual number of sensors connected to the modules.
4	Press ACK	Monitor should revert to FLOW OPEN.

Flow (Optical Sensors) - continued

Flow Function - continued

Flow Calibration

In calibration mode, the module determines the normal seed flow rate for each run. This calibrated flow rate is used to determine the threshold for indicating that a run is blocked. The calibration mode must be started by command from the monitor as follows:

At any time during this test, ACK may be pressed and held until after the long beep to exit the Flow Test Mode.

Calibration		
Step	**Action**	**Desired Result (Actual)**
1	Have the cart "in motion".	Should hear a double beep as the "in motion" boundary is crossed.
2	On the FLOW screen, press and hold the ACK key for 5 seconds.	CAL should be shown on line 1. Line 2 will cycle through the runs that haven't been calibrated yet.
3	Operate the cart in planting conditions.	As material flows through each tube all modules attempt to calibrate their sensors.
		Should hear 4 short beeps and the screen should display "CAL OK" on line 1 and "--" on line 2. This may take a few minutes, depending on configuration and application.
4	Press ACK	Monitor should revert to FLOW OPEN.

Sensor Replacement

The monitor will alarm the operator if there is a faulty sensor in the system.

To replace the faulty sensor, the replacement sensor is plugged into the harness **prior to turning on the monitor**. When the power is turned on, the monitor will learn the new sensor in replace of the faulty sensor.

Note: This procedure will work when there is only one faulty sensor in the system.

When there is **more than one faulty sensor** in the system the installation of the replacement sensors is handled differently.

The monitor is turned on with nothing connected at the faulty sensor locations. The monitor will tell the operator what sensor should be attached to the harness. When it is attached the monitor will recognize it and then ask for the next sensor to be attached. This continues until all the replacement sensors have been attached.

Sensor Gap Settings

Reed Switch Sensors

These sensors are used on slowly revolving shafts, in this case the meters and ground speed.

Check the gap between the sensor and actuator.

A gap of .030 inch (0.76 mm) is recommended.

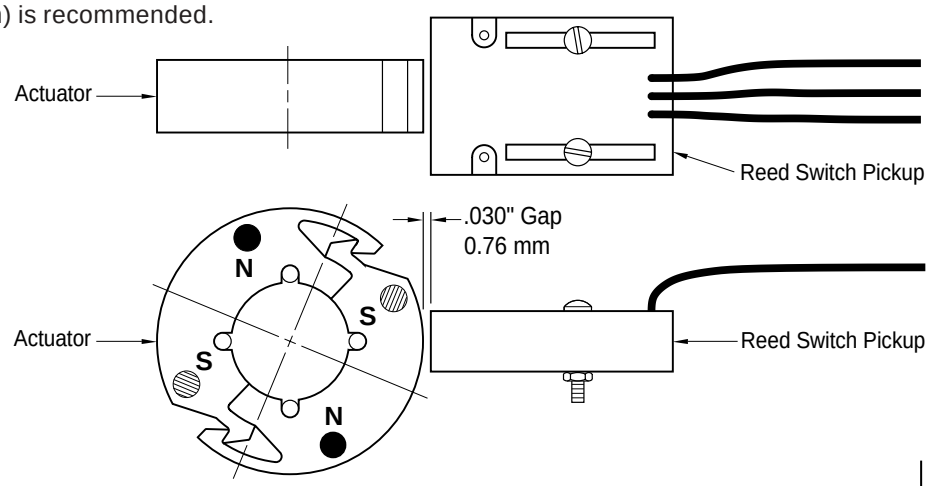

Variable Reluctance Sensors

These sensors are used on high speed shafts, in this case the fan.

Target to sensor gap is critical with these sensors.

A gap of .030 inch (0.76 mm) is recommended.

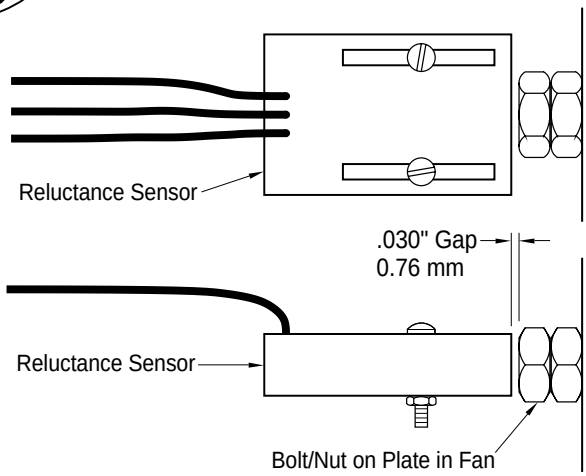

Trouble Shooting Guides

Most electronic problems are usually one of the following:

- Harness connections.
- Harness to sensor connections.
- Damaged Harness wires.
- Loose terminal in harness plug.
- Sensor to Actuator clearance.
- Defective sensor.

The monitor will alert the operator of these problems as outlined under *"Communication Alarms"* and *"System Error Alarms".*

Checking Harness

First, check for the obvious things like broken connections, loose terminals, insulation rubbed off and so forth.

- Check continuity of wires with ohm meter.
- Take the connector shells off to see if any wires have worked loose.

Checking Sensors

The best approach to testing a sensor is to substitute a suspected sensor with a known good one. If the problem goes away, the sensor is faulty. If it does not go away, it is faulty wiring.

Note: On Bin Level Sensors ensure there is no foreign material covering the optical sensor. Remove material with a cloth as not to damage lens.

Checking Blockage Modules

The best approach to testing a sensor is to substitute a suspected sensor with a known good one. If the problem goes away, the sensor is faulty. If it does not go away, it is faulty wiring or Blockage Module.

Note: Seed or material dust on the sensor may prevent the sensor from accurately sensing seed hits. The sensor pin may be cleaned using a sharp knife and gently scraping away the caked on material.

Notes

Section 7: Maintenance

Section Contents

General 7-3
Safety 7-3
Tighten Bolts 7-4
Tires 7-4
Daily Maintenance 7-5
Lubrication 7-6
1. Drive shaft bearings 7-6
2. Drive Chains 7-6
3. Slow Speed Drive 7-6
4. Front Castor Wheel bearings 7-7
5. Castor Fork Pivot (7130 and 7180 only) 7-7
6. Auger pivots 7-7
Air Delivery System 7-8
General 7-8
Tank Lids 7-9
Tank Lid Adjustment 7-9
Air Leak Check 7-10
Fan 7-11
Fan Screen 7-11
Fan Impeller 7-11
Storage 7-11
Impeller Clearance 7-12
Hoses 7-12
Hydraulic Orbit Motor 7-13
Repair/Replacement 7-13
Clutch 7-13
Engine Maintenance 7-14
Daily Maintenance 7-14
Weekly Maintenance 7-14

Section Contents - continued

Air Cleaner Maintenance 7-15
Fan Drive Belt Maintenance 7-15
General Engine Maintenance 7-15
Hydraulics 7-16
Wheel Bearings 7-17
Front Castor Brake Adjustment 7-18
Metering 7-19
Metering Wheel Replacement 7-19
Standard Metering Body 7-20
Coated Metering Body 7-21
Auger Arm Lock 7-24
Auger Pre-Load Adjustment 7-24
2-3 Meter Cart 7-25
Castor Fork Adjustment 7-25

SAFETY-ALERT SYMBOL

Watch for this symbol. It identifies potential hazards to health or personal safety. It points out safety precautions. It means:

ATTENTION - BE ALERT.

Your safety is involved.

General

This section deals with two goals, maximum life and dependable operation. Adopt a regular maintenance and lubrication program. Care and sufficient lubrication is the best insurance against delays.

Safety

- Always shut off the tractor and remove key before dismounting.
- Guard against hydraulic high pressure leaks with hand and face protection.
- Never work under the Implement unless it is in the down position or transport lock pins are in place and secured with hair pins. Do not depend on the hydraulic system to support the frame.
- Always wear safety goggles, breathing apparatus and gloves when working on seeder filled with chemical. Follow manufactures recommended safety procedures when working with chemicals or treated seeds.
- Do not feed left over treated seed to livestock, treated seed is poisonous and may cause harm to persons or livestock.

Warning

Securely support any machine elements that must be raised for service work.

Caution

Keep service area clean and dry. Wet or oily floors are slippery.

Tighten Bolts

- Before operating the Air Cart.
- After the first two hours of operation.
- Check tightness periodically thereafter.
- Use Bolt Torque Chart for correct values on various bolts.
- Note dashes on hex heads to determine correct grade.

Note: DO NOT use the values in the Bolt Torque Chart if a different torque value or tightening procedure is given for a specific application.

- Fasteners should be replaced with the same or higher grade. If higher grade is used, only tighten to the strength of the original.

Bolt Torque Chart

Grade 5 Bolt Marking		Bolt Size	Grade 8 Bolt Marking	
Nm	lb. ft.		lb. ft.	Nm
11	8	**1/4**	12	16
23	17	**5/16**	24	33
41	30	**3/8**	45	61
68	50	**7/16**	70	95
102	75	**1/2**	105	142
149	110	**9/16**	155	210
203	150	**5/8**	210	285
366	270	**3/4**	375	508
536	395	**7/8**	610	827
800	590	**1**	910	1234
1150	850	**1-1/8**	1350	1850
1650	1200	**1-1/4**	1950	2600
2150	1550	**1-3/8**	2550	3400
2850	2100	**1-1/2**	3350	4550

Tires

- Inspect tires and wheels daily for tread wear, side wall abrasions, damaged rims or missing lug bolts and nuts. Replace if necessary.
- Tighten wheel bolts - refer to Bolt Torque Chart.
- Check tire pressure daily, when tires are cold.
- Correct tire pressure is important.
- Do not inflate tire above the recommended pressure.

⚠ Caution

Tire replacement should be done by trained personnel using the proper equipment.

Tire Specifications

Tire Size (Good-Year)	Tire Style	Rating	Pressure
16.5L x 16.1	Softrac II	6 ply	24 P.S.I.
	Sure Grip Traction	6 ply	24 P.S.I.
21.5L x 16.1	Softrac II	6 ply	20 P.S.I.
	Sure Grip Traction	8 ply	24 P.S.I.
	Softrac II	10 ply	28 P.S.I.
	Sure Grip Traction	12 ply	32 P.S.I.
18.4L x 26	AWT (Implement)	10 ply	26 P.S.I.
23.1L x 26	AWT (Implement)	8 ply	20 P.S.I.
	TD8 Sure Grip	10 ply	28 P.S.I.
	AWT (Implement)	12 ply	24 P.S.I.

Daily Maintenance

- Check for and remove any water in primary collectors after rainy weather. Remove both front and rear clean-out doors and collector bottom to drain water from the tanks and collectors.
- Reinstall collector bottoms and clean-out doors.

Important: Care must be taken when reinstalling collector bottoms to prevent damage to the inside of the collector.

- Assure fan screen is clear of debris.

Note: Start fan and run for 3 - 5 minutes prior to loading machine to get rid of accumulated moisture.

- Check lid seals for damage, and that they are sitting properly on steel ring.
- Check tank pressure hoses for leaks, cracks or plugging.
- **Check the following areas for air leaks:**
  - **Tank clean-out door**
  - **Metering body assembly seals**
  - **Collector assembly seals**
  - **Tank lid**

  Refer to "Air Leak Check" under Air System Maintenance.
- Check monitor wiring that all sensor wires are properly routed and retained.
- Check for plugged hoses.
- Check for free movement of spring loaded chain tension idlers.
- Assure drive chains are cleared of debris.
- Inspect wheel bolts for looseness.
- Service engine, see engine maintenance.

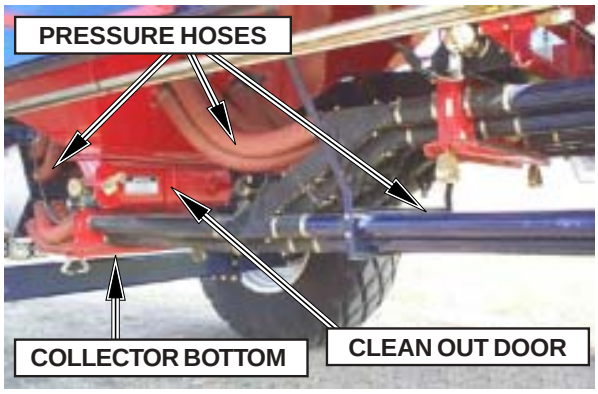

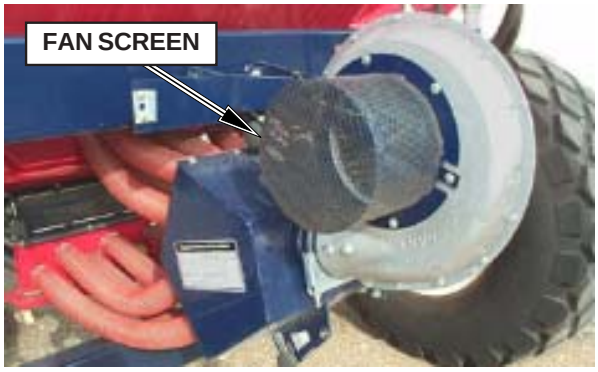

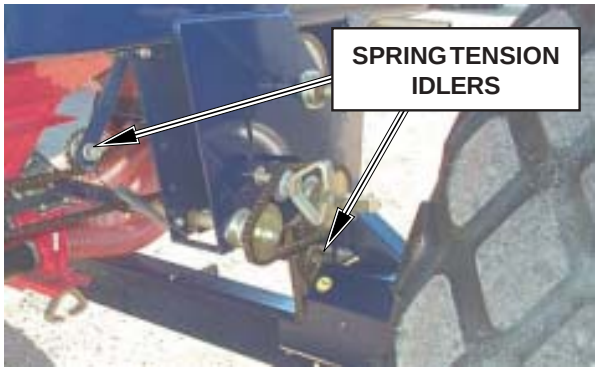

Lubrication

Greasing pivot points prevents wear and helps restrict dirt from entering. However, once dirt does enter a bearing, it combines with the lubricant and becomes an abrasive grinding paste, more destructive than grit alone.

- Apply new lubricant frequently during operation to flush out old contaminated lubricant.
- Use a good grade of **lithium based grease**.
- Use a good grade of machine oil.
- Clean grease fittings and lubricator gun before applying lubricant.

Refer to the photos on **page 7-6** and **7-7** for grease fitting locations.

1. Drive shaft bearings

- Grease every 50 hours.

2. Drive Chains

- Oil every 50 hours.

3. Slow Speed Drive

- Grease every 50 hours.

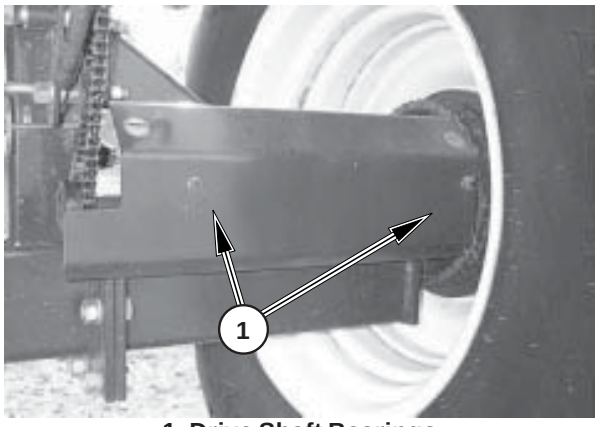

1. Drive Shaft Bearings

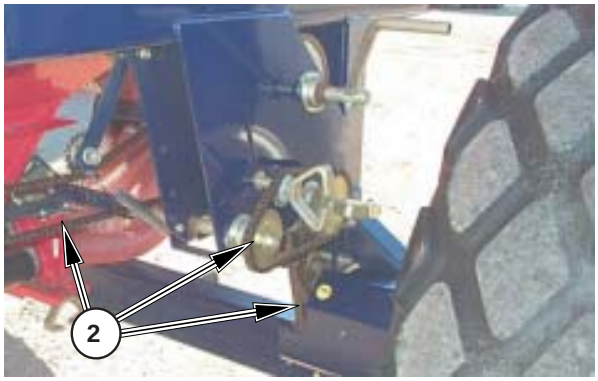

2. Drive Chains

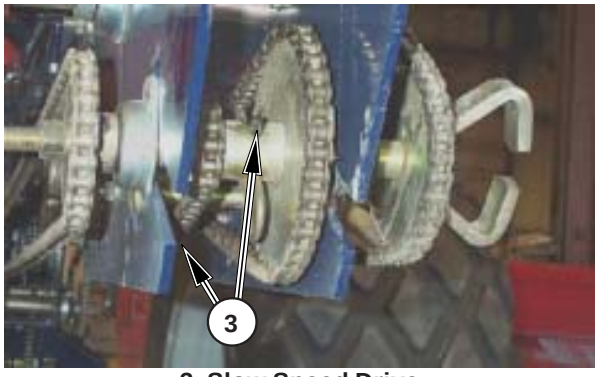

3. Slow Speed Drive

Lubrication - (continued)

4. Front Castor Wheel bearings

- Grease every 50 hours.

5. Castor Fork Pivot (7130 and 7180 only)

- Grease every 50 hours.

6. Auger pivots

- Grease every 100 hours.

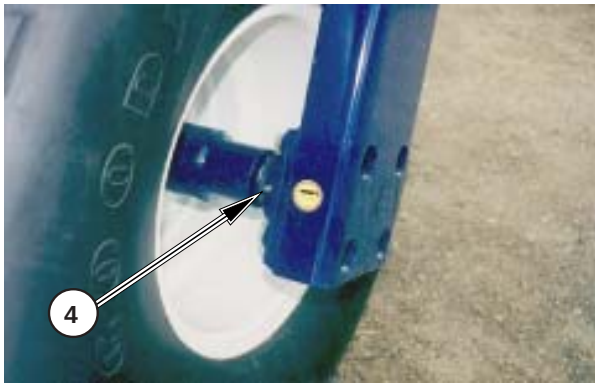

4. Front Castor Wheel bearings

5. Castor Fork Pivot (2-3 Meter Cart)

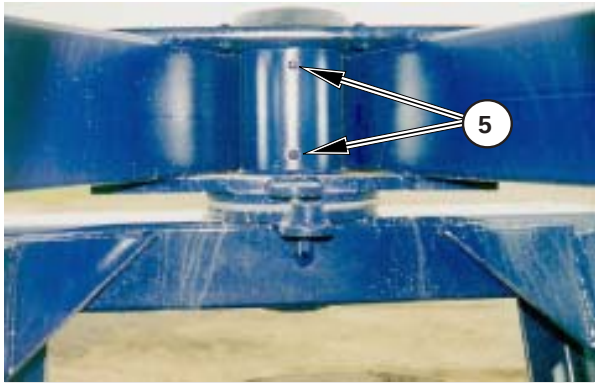

5. Castor Fork Pivot (7130 and 7180)

6. Auger Pivots

Air Delivery System

General

The air delivery system of all Air Carts is extremely important for the proper metering of product to the openers. The metering system on all pressurized Air Carts is sensitive to air leaks. **Loss of tank air pressure could affect feed rates, which could become erratic or even stop.**

- Regularly check that all hoses are free from kinks or blockages throughout the day. To check for blockages raise seeding tool out of the ground and with the fan running turn crank a couple of turns. Equal amounts of material should be deposited under each boot if not check the following for blockage:
  1. Seed openers and secondary hoses.
  2. Divider heads by removing access doors.
  3. Primary hoses and collectors.
  4. Metering wheels for damage to key-way and the flutes of the wheel.
- Keep fan inlet screen clear and free from debris.
- Place a plastic bag over the fan when the unit is not in use. This helps prevent moisture from entering the system.
- Check periodically and at the end of each season for air leaks at hose connections.
- Check periodically and at the end of each season for air leaks at the following:
  1. Tank Lid Seals.
  2. Metering body shaft seals.
  3. Metering body to tank seals.
  4. Collector to metering body seals.
  5. Fan to plenum.
  6. Plenum to collector.
  7. Clean-out doors, for leaks and loss of seal memory.
  8. Collector door seals.
  9. Diverter Valves.
  10. Couplers between seeder and cultivator.
  11. Access Doors on Divider Heads.

Note: There must not be any air leaks from the tank. This air leakage causes air turbulence in the tank which can result in inaccurate metering rates.

- Once a year check for wear of primary and secondary hoses.

Caution

Care should be taken when working near the Air Cart while the fan is running. Product blowing out of the system could cause personal injury.

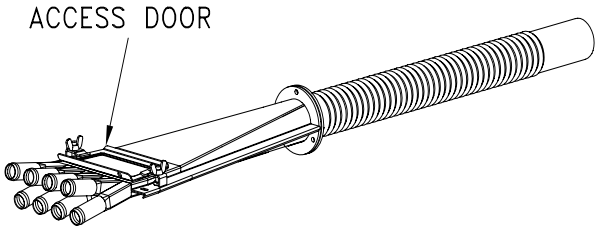

Note: Extended life can be obtained if the hoses are rotated 1/4 turn once a year.

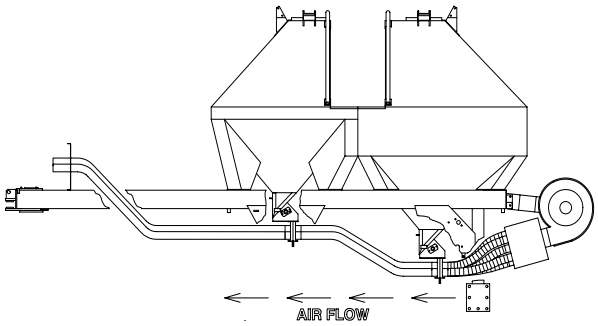

Air Delivery System - continued

Tank Lids

The lid seal is probably the area that sees the most abuse due to the activity associated with filling the tanks.

With each fill the lid seals should be inspected for cuts, abrasions, debris in the seal and ensure the seal is positioned properly on the steel rim around the tank opening.

Tank Lid Adjustment

Check Tank Lid tension on *all tanks* at beginning of each season and periodically during season for air leaks. The following checks and adjustments must be made to prevent air leaks from occurring:

- Check for any foreign material embedded into seal. Clean out foreign material from seal surface.
- Check seal for cuts and abrasions. If seal is cut or severely worn, then replace seal.
- Ensure seal is positioned properly on steel rim around tank opening.
- Use a 0 - 100 lb. (45 kg) spring scale to check the tank lid opening force. With the lid closed place one end of the scale *one inch* from the end of the tank lid lever. Pull straight up on the scale and note the maximum force it takes to open the lid. The force needed to open the lid ***must be greater than 65 lbs (29 kg).*** Adjust the lid latch adjusting bolt as necessary. The lid latch should close with a ***snap.*** This will ensure that the lid is sufficiently tight and prevent any leaks.
- Re-check for leaks. If lids still leak turn down bolt one or two more turns. Re-check for leaks.

Important

It is imperative that no air leaks occur in the Air Cart tank as even the smallest air leak from the lid will lead to material bridging in the tank thereby causing misses in the field.

Note: When Air Cart is not in use, leave lid latches loose to help maintain resilience of the seals.

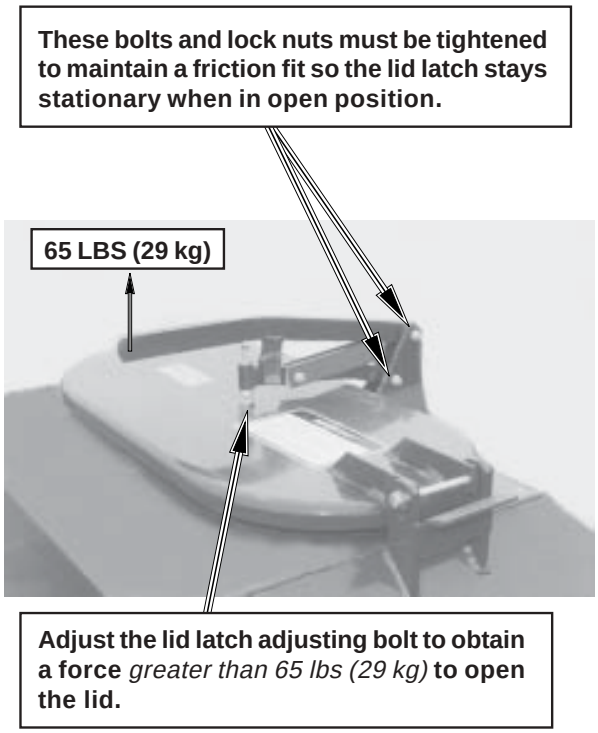

Air Delivery System - continued

Air Leak Check

It is ***imperative that no air leaks occur*** in the Air Cart tank. Any air leaks could cause loss of tank air pressure affecting feed rates, which could become erratic or stop.

To prevent this from occurring, it is strongly recommended that a pressure test be conducted prior to seeding time. This can be performed very easily and simply by completing the following steps:

- Clean fan impeller and adjust tank lids.
- Disconnect the 2 1/2" (64 mm) diameter primary hoses from the rear of the cultivator at the primary hose coupler(s) by loosening the four 3/8" bolts.
- Install the blank off plate that is supplied with the Air Cart at each coupler and retighten the 3/8" bolts. If the blank off plates are not readily at hand a piece of cardboard can be used in its place.
- Once the blank off plates have been installed, start the fan and run at 4,500 rpm.

Check the following areas for air leaks:

1. Tank lid seals.
2. Metering body shaft seals.
3. Metering body to tank seals.
4. Collector to metering body seals.
5. Fan to plenum and plenum to collector.
6. Clean-out doors, for leaks and loss of seal memory.
7. Collector door seals.
8. Diverter valves and double shoot mounting plates.
9. Tanks union plate.
10. Tank site glasses.

Air leaks can be detected by spraying a soapy water solution onto the seal area. If bubbling of soap occurs, the seal has a leak. Another method is to use your hand to feel for any air movement around the seal. This method requires a calm day, as the wind can make it difficult to detect a small leak.

- If any of the above areas leak, remove the parts and replace the seal. Ensure upon reassembly that the parts are tightened sufficiently to prevent air leakage.
- Remove the blank off plates before using the Air Cart.

Once the pressure test is complete, check the following areas for air leaks:

11. Couplers between seeder and cultivator.
12. Access doors on divider heads.

Important

It is imperative that no air leaks occur in the Air Cart tank, as even the smallest air leak will lead to material bridging in the tank, thereby causing misses in the field.

Note: When Air Cart is not in use leave lid latches and clean-out doors loose to help maintain resilience of the seals.

Air Delivery System - continued

Fan

Debris can build up on the fan screen and blades causing reduced output of the fan. The lack of air flow even at higher fan speeds will cause material plugging of the air system.

The build up of material during operation can cause the following:

1. Fan rpm will increase without increasing oil flow to orbit motor.
2. Air Cart distribution system plugging from a lack of air flow (Increasing fan rpm has little or no effect).

Fan Screen

- Ensure fan screen is clear of debris. Check periodically through the day.

Fan Impeller

The fan blades may become plugged under high humidity/dusty conditions/high insect counts.

Under severe conditions the fan blades should be inspected daily and cleaned as required.

Under normal conditions the fan should be inspected and cleaned at least once a season.

- Care should be taken in cleaning all fan blades thoroughly to restore the fans peak performance.
- Ensure that the balance clips located on the fan blades are not removed, as this will put the fan out of balance.

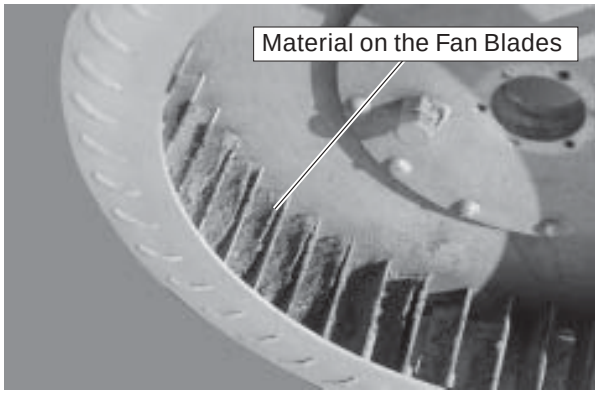

Note: Material build up on the fan blades could cause the fan to be out of balance. The added vibration of the out of balance impeller will reduce the life of the fan components.

Storage

To prevent water entering the air system, cover the fan intake with a plastic bag, whenever the seeder is not in use.

Note: Be sure to remove fan cover prior to starting fan. Serious damage could result to the fan.

Air Delivery System - continued

Impeller Clearance

The impeller should be centred inside the housing to avoid contact between the impeller and housing.

The distance "X" between the impeller and housing inlet, when centred, will be approximately 3/8” (9 mm) to 1/2” (12 mm).

When assembling fan ensure flange surfaces of housing are clean.

Apply a 1/4" (6 mm) silicone bead to one flange surface of housing including outlet seam.

Mate surfaces and secure in place with 1/4" x 1" hex bolts (G) and 1/4" serrated lock nuts (H).

Note: Torque 1/4" bolts to 49 in. lb.

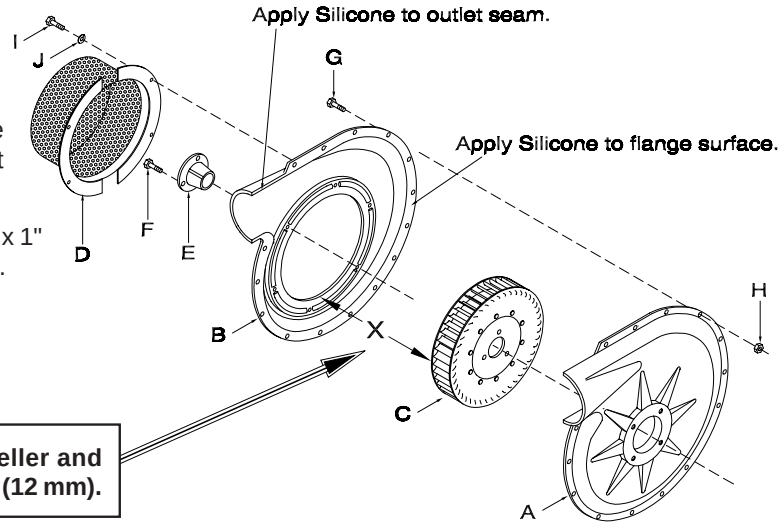

Set clearance "X" between the impeller and housing inlet from 3/8" (9mm) to 1/2” (12 mm).

Hoses

Inspect air delivery hoses for wear and replace as required. Check areas where hoses maybe exposed to moving parts such as hitch hinge area. At the Air Cart hitch area, place a piece of 2 1/2” (64 mm) hose 12” (305 mm) long over top of the two hitch extension pins to protect air hoses from contacting pins.

Also, inspect hoses for blockage as rodents/birds may nest in hoses that have not been properly capped during storage.

To optimize the 7000 Series Air Cart air system on single shoot units the difference in length between the longest primary hose and the shortest primary hose **should not exceed six feet**.

In conjunction with this, it is important to eliminate the use of the centre port of the plenum. Check plenum hose routing, if centre port of the plenum is used change hose location.

DO NOT USE
CENTRE PORT ON ALL PLENUMS

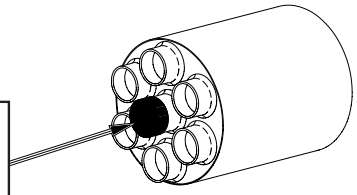

Hydraulic Orbit Motor

The motor requires no maintenance itself.

It does, however, require clean oil so the tractor hydraulic filters must be replaced regularly.

Repair/Replacement

- Remove orbit motor from the fan.

Note: The shaft should never be hammered on or forced in as this will result in motor damage upon startup.

- Remove the snap ring and front cover.
- Push out the old shaft seal and press in the new one.

Note: The bearings should never be removed from the shaft as they are pretensioned to the shaft with the motor spinning.

- Replace the O ring.
- Both the O ring and shaft seal should be greased with a *"very clean"* grease.
- Care must be taken when the front cover is installed so the shaft seal is not damaged.
- Reinstall the snap ring.
- Fill the motor case with *"clean"* oil before running.

Note: Any time a motor is replaced the case must be filled with oil before it is started, if not, a bearing failure could occur.

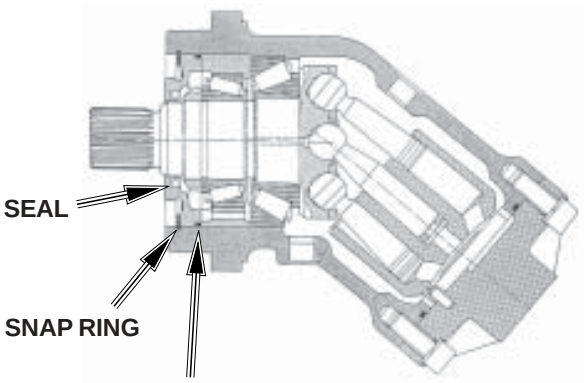

Clutch

A torque of 80 ft-lbs (108 N-m) - 100 ft-lbs (135 N-m) is required to slip the clutch.

To check clutch for slippage check the following:

- Check friction plates for corrosion and buff with a wire wheel if necessary.
- Check clutch coil resistance. If the meter reads below 2.40 ohms or above 2.90 ohms, then the clutch has failed and needs to be replaced.
- Check clutch current draw. If the meter reads below 4 amps, there is a problem in the electrical system leading to the clutch.
- Check clutch side play. If there is movement on the shaft between the two clutch halves, adjust using N31040 shim washers.

Note: All values taken at room temperature. Voltage at 12 VDC. As temperature increases, resistance increases, and current decreases.

Engine Maintenance

Daily Maintenance

See Engine Operators Manual.

- Check oil level. It is very important the engine is not overfilled with oil. Normal oil consumption for the 2 cylinder Kohler engine is up to 1 pint of oil per day. Taking a day to be 8 working hours.

If the engine is overfilled with oil, the following will happen:

(1) Oil will be pumped out of the exhaust pipe.
(2) Overfilling causes air ingression and foaming of the oil which results in poor lubrication and subsequent damage to the engine.

- Check all air-intake hoses and clamps are in place and tight.
- Check engine cooling fins are free from debris.
- Clean flywheel screen of any debris.
- CLEAN cyclone pre-cleaner.
- Check the activator valve on aircleaner is clear of debris.
- Check vent in fuel cap is clear.
- Check belt tension.

Weekly Maintenance

See Engine Operators Manual.

- Service primary air filter element.
- Change oil and filter (See ENGINE OPERATORS MANUAL).
- Clean cooling fins and external surface of engine. Ensure shrouds are reinstalled. Failure to do so will result in damage to the engine due to overheating.

Engine Maintenance - (continued)

Air Cleaner Maintenance

The air cleaner system on the 7000 Series Air Cart consists of 3 stages:

- A cyclone pre-cleaner that should be cleaned daily.
- A primary paper element that should be cleaned weekly. Release the dirt and dust by hitting the element against your hand.

  Never strike against a hard surface of use compressed air when cleaning the element.
- Check element for pinholes using a trouble light. If there are any pin holes then replace element immediately.
- A safety element is located inside the primary element. This element should be inspected and cleaned the same as the primary element. If the safety element is dirty, there is a problem with the primary element and both the primary element and the safety element should be replaced.
- When reassembling the air filter, ensure unit is assembled correctly and is sealed completely.
- Check activator valve is clear of debris.

Important

Damaged or loose components will allow unfiltered air into the engine causing premature engine wear and failure.

Fan Drive Belt Maintenance

- Check belt tension on engine driven fan weekly. Spring length should be 8 to 8 5/8” long.
- If spring length is incorrect, loosen jam nut and adjust the 3/4” nut down until the correct spring length is obtained.
- If there is no adjustment left then replace belt.

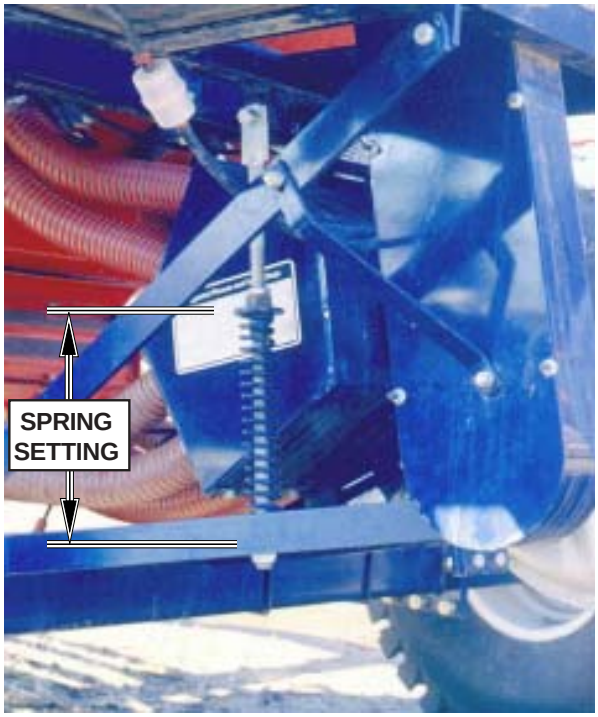

General Engine Maintenance

- Check and/or replace spark plugs every 100 hours.
- Replace fuel filters on engine and on fuel intake line below tank every 100 hours.
- Have engine serviced at a respective Engine Service Dealer every 500 hours.

Hydraulics

Refer to Section 1 regarding hydraulic safety. In addition:

- Inspect hydraulic system for leaks, damaged hoses and loose fittings.
- Damaged Hoses and hydraulic tubing can only be repaired by replacement. DO NOT ATTEMPT REPAIRS WITH TAPE OR CEMENTS. High pressure will burst such repairs and cause system failure and possible injury.
- Leaking cylinders - install a new seal kit.
- Fittings - use liquid Teflon on all NPT hydraulic joints. **Do not use liquid Teflon or Teflon tape on JIC or ORB ends.**
- Hydraulic Hose Connections - when connecting the hoses to the cylinders, tubing, etc. always use one wrench to keep the hose from twisting and another wrench to tighten the union. Excessive twisting will shorten hose life.
- Keep fittings and couplers clean.
- Check the Tractor Manual for proper filter replacement schedule.

Refer to the Trouble Shooting Section.

MORRIS Industries Ltd.

Contact your nearest Dealer for genuine repair parts. Dealers carry ample stocks and are backed by the manufacturer and regional associations.

⚠ Caution

Dirt in the hydraulic system could damage O-rings, causing leakage, pressure loss and total system failure.

Note: Extreme care must be taken to maintain a clean hydraulic system. Use only new hydraulic fluid when filling reservoir.

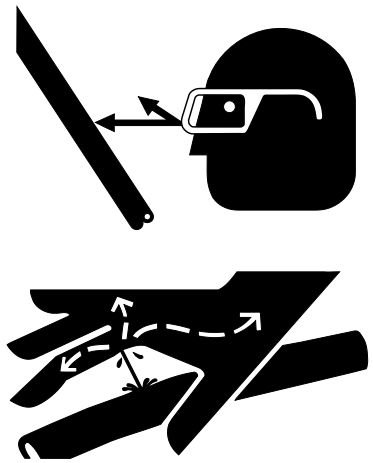

⚠ Warning

HIGH-PRESSURE FLUID HAZARD

To prevent serious injury or death:

- **Relieve pressure on hydraulic system before servicing or disconnecting hoses.**
- **Wear proper hand and eye protection when searching for leaks. Use wood or cardboard instead of hands.**
- **Keep all components in good repair.**

Wheel Bearings

- Shut tractor off and remove key.
- Block wheel on tractor.
- Raise the Air Tank wheels enough to clear the surface.
- Securely block Air Tank frame.
- Remove wheel from hub.
- Remove the dust cap, cotter pin, and the slotted nut and washer.
- Be careful when pulling the hub off as not to drop the outer bearing.
- Clean spindle and bearing components with solvent.
- Inspect for wear on bearings, spindle and cups, replace parts as required.
- Do not reuse old seals. Use only new seals when assembling.
- Pack inner hub with bearing grease.
- Be sure bearing and cup are dry and clean.
- Work grease into the bearing rollers, until each part of the bearing is completely full of grease.
- Install inner bearing and cup first, then press new seals in place.
- Place hub on spindle.
- Install outer bearing, washer and slotted nut.
- Tighten nut while turning the wheel until a slight drag is felt.
- Back nut off one slot and install a cotter pin. Bend cotter pin up around nut.
- Pack grease inside the dust cap and tap into position.

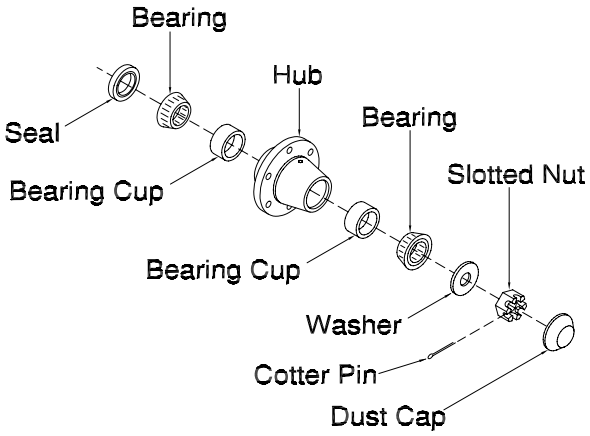

Front Castor Brake Adjustment

The 7240 and 7300 Air Cart Dual Axle Front Castor is equipped with a brake which prevents the tires from shimmy under normal operation. It is important the front castor brake be properly adjusted. If the brake is not adjusted correctly the tires will shimmy excessively and may cause the axle assembly to fail.

Adjust the castor brake as follows:

- Check and ensure there is no paint/grease where the brake pad rides, as the paint/grease will reduce the effectiveness of the brake.
- Inspect brake pad (N25465) ensuring it is not damaged or worn, replace if required.

Note: Maximum allowable wear is 1/8" (6 mm). (New pad is 3/8" (9 mm) thick)

- Check and ensure the hex socket brake pad mounting screws (N25463) are securely tightened.
- Check preload on castor fork top pivot bearings (with brake pad assembled loosely). Tighten as required using wheel bearing tightening procedure (springs will compress to a length of approximately 2 3/8"[60 mm]).
- Adjust the jam nuts until the spring length is 2-1/8" (54 mm). See Below.
- Increase the spring pressure on the brake to stop the castor wheels from shimming in the field or on the road.

Note: Do not overtighten the springs. Excessive spring pressure will prevent wheels from castoring.

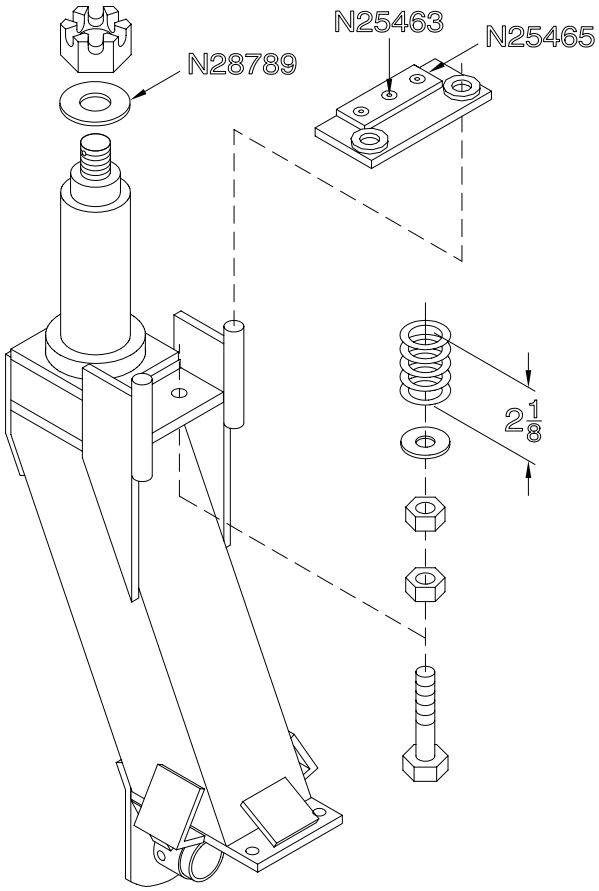

Note: Tighten jam nuts until the spring length is 2 1/8" (54 mm)

Important

Dual wheel brake will provide sufficient pressure to stabilize castor at all travel speeds up to 18 m.p.h. (28 kph). Avoid setting more pressure on brake pad than required to maintain stability. Tow only with all tanks empty. If a unit must be towed loaded over a short distance, the *transport speed must be reduced* to 10 m.p.h. (16kph) or slower.

Metering

The metering wheels come in 4 different sizes. Each wheel matches to a specific distribution head mounted on the Seeding Tool.

If the metering wheel and distribution head are not matched correctly, the distribution accuracy will be adversely affected.

Spacer plates are used to take up the extra space in each metering cup. These spacer plates vary in size according to the size of the metering wheel.

Metering Wheel Replacement

- Remove the monitor donut from the Right Hand Side of the metering body.
- Disconnect meter shaft coupler from the meter shaft and transmission drive shaft.
- Loosen the locking collars on the meter shaft bearings.
- Remove the bolts holding the meter shaft bearings and remove both bearings.
- Remove the meter shaft from the Right Hand Side.
- Remove the slider plates from all cups with metering wheels.
- Remove the metering wheels. Inspect wheels and replace if required.
- Clean cups in metering body thoroughly prior to re-assembly.
- Smear a very-very thin layer of silicone on the pin side of the spacer plates for the 7, 8 and 9 metering cups.

  The side with the silicone must be installed against the metering body.

- Place all metering wheels and spacers back into the metering body in the same order they came out of.

  The location of each primary run and wheel size must be the same for both metering bodies.

Assembly Hint: Mark the metering wheels on the outside of the rib that is next to the key.

Table 1

Divider Head	Metering Wheel		Spacer	
Outlets	**Number**	**Width**	**Number**	**Width**
7	7	1 3/4" (45 mm)	2	1/2" (13 mm) & 1/4" (6.4 mm)
8	8	2" (51 mm)	2	1/4" (6.4 mm) & 1/4" (6.4 mm)
9	9	2 1/4 (57 mm)	1	1/4" (6.4 mm)
10	10	2 1/2" (64 mm)	-	-

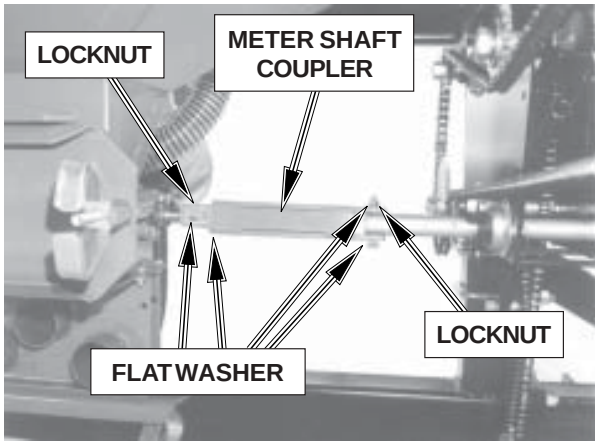

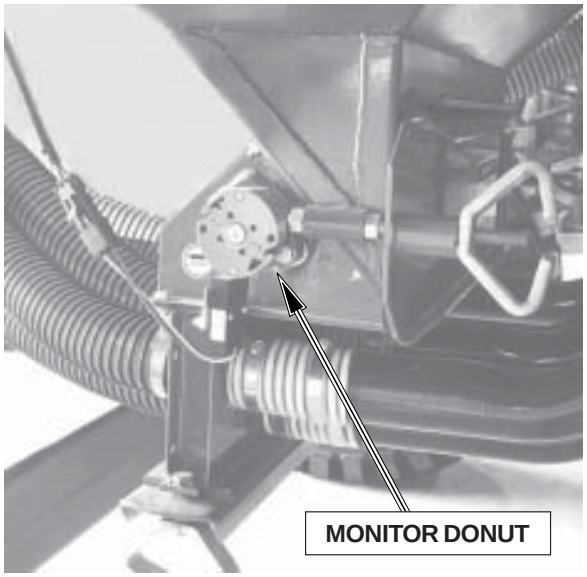

Metering - continued

Standard Metering Body

Note: The metering wheels can be installed with the metering body mounted to the Air Cart.

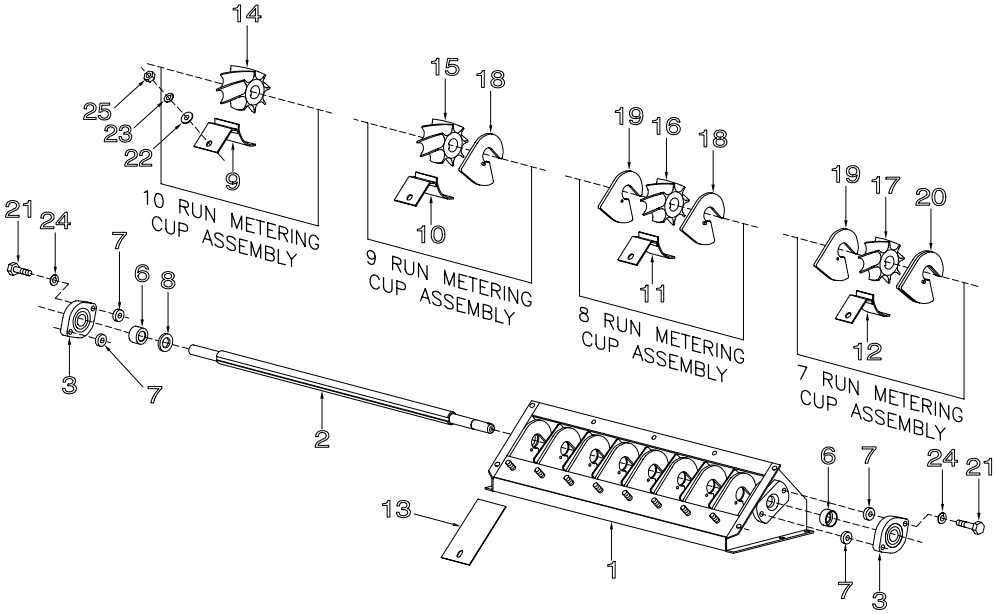

Item	Part No.	Description	Qty
1	N27100	Metering Body	1
2	N19687	Metering Shaft - 8 Outlet	1
3	N19269	Bearing Assembly - NTN - 2 Bolt Flange	2
6	N21659	Seal	2
7	N21602	Spacer	4
8	N21612	Backing Washer	1
9	N27090	Slider - #10 Wheel	As req
10	N27089	Slider - #9 Wheel	As req
11	N27088	Slider - #8 Wheel	As req
12	N27087	Slider - #7 Wheel	As req
13	N27605	Cover - Blank Off	As req
14	N19526	Wheel - #10 Metering (Cream Colored) (0.250" width)	As req
15	N19527	Wheel - #9 Metering (Cream Colored) (0.225" width)	As req
16	N19528	Wheel - #8 Metering (Cream Colored) (0.200" width)	As req
17	N19529	Wheel - #7 Metering (Cream Colored) (0.175" width)	As req
18	N27099	Spacer Plate - #9 Wheel (Single - Left)	As req
19	N27098	Spacer Plate - #8 Wheel (Single - Right)	As req
20	N27097	Spacer Plate - #7 Wheel (Double - Left)	As req
21	W-477	Hex Bolt - 3/8 x 1 1/2 Lg	4
22	D-5488	Flatwasher - 5/16	8
23	W-522	Lockwasher - 5/16	8
24	W-523	Lockwasher - 3/8	4
25	N15114	Hex Nut - 5/16 Stainless Steel	8
26	N15716	Seal Strip - 1/4 x 1 x 152 Lg (Bulk/Ft)	8 ft

Metering - continued

Coated Metering Body

Note: The metering wheels can be installed with the metering body mounted to the Air Cart.

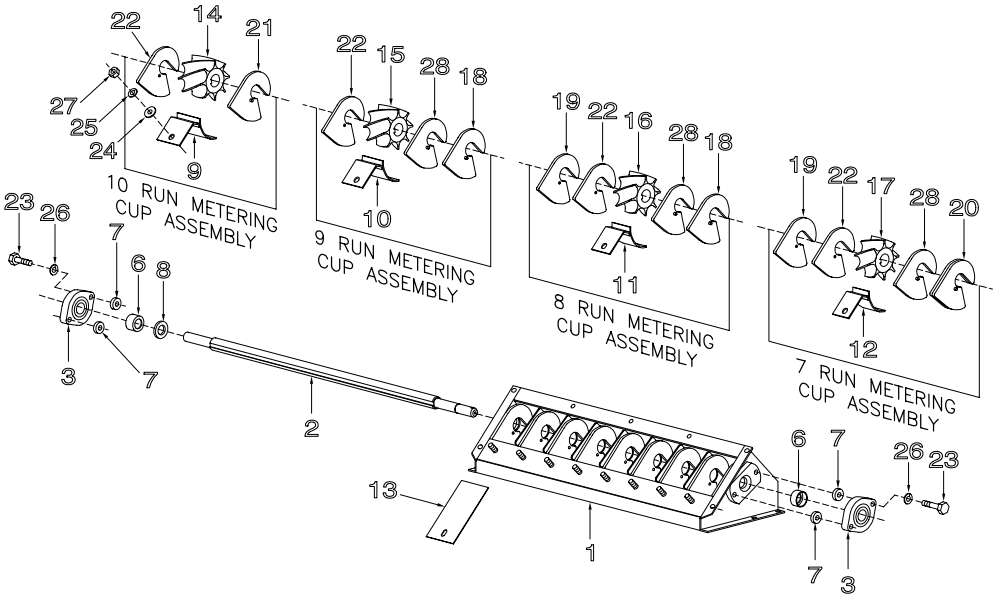

Item	Part No.	Description	Qty
1	N28928	Metering Body	1
2	N19687	Metering Shaft - 8 Outlet	1
3	N19269	Bearing Assembly - NTN - 2 Bolt Flange	2
6	N21659	Seal	2
7	N21602	Spacer	4
8	N21612	Backing Washer	1
9	N27090	Slider - #10 Wheel	As req
10	N27089	Slider - #9 Wheel	As req
11	N27088	Slider - #8 Wheel	As req
12	N27087	Slider - #7 Wheel	As req
13	N27605	Cover - Blank Off	As req
14	N19526	Wheel - #10 Metering (Cream Colored) (0.250" width)	As req
15	N19527	Wheel - #9 Metering (Cream Colored) (0.225" width)	As req
16	N19528	Wheel - #8 Metering (Cream Colored) (0.200" width)	As req
17	N19529	Wheel - #7 Metering (Cream Colored) (0.175" width)	As req
18	N27099	Spacer Plate - #9 Wheel (Single - Left)	As req
19	N27098	Spacer Plate - #8 Wheel (Single - Right)	As req
20	N27097	Spacer Plate - #7 Wheel (Double - Left)	As req
21	N28927	Plastic Spacer - Wheel (Left)	8
22	N28929	Plastic Spacer - Wheel (Right)	1
23	W-477	Hex Bolt - 3/8 x 1 1/2 Lg	4
24	D-5488	Flatwasher - 5/16	8
25	W-522	Lockwasher - 5/16	8
26	W-523	Lockwasher - 3/8	4
27	N15114	Hex Nut - 5/16 Stainless Steel	8
28	N28924	Plastic Spacer - Wheel (Without Pin)	7
29	N15716	Seal Strip - 1/4 x 1 x 152 Lg (Bulk/Ft)	8 ft
	N29457	Kit Coated Metering Body Assy (Includes 1, 2, 3, 6, 21, 22, 28 & 29)	

Metering - continued

Assembly Hint: Mark metering wheel size on the metering body. This will help in connecting the main distribution hose and secondary divider heads.

- Align the shaft keyway with the marks on the metering wheels. Slide the metering shaft through the metering wheels.

Note: Care must be taken that the key ways are aligned, otherwise damage to the key in the wheels may occur.

- The metering shaft must be pushed through until the shoulder on the shaft hits the side of the metering body.
- Install the washer on the shaft and into the housing on the Right Hand Side of the metering body.

Important: The seal must be installed as shown, with open side of the seal to the outside. Care must be taken when installing the seal. It is recommended that a brass drift be used to minimize any damage to the seal.

Note: The Left Hand Side seal is installed at the factory.

- Reinstall both meter shaft bearings and spacers with the grease fitting towards the rear of the machine.

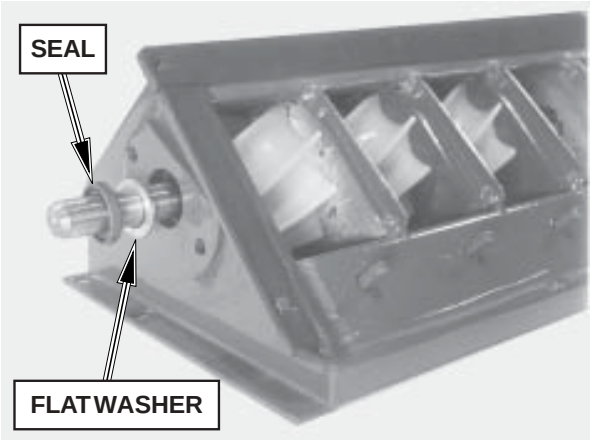

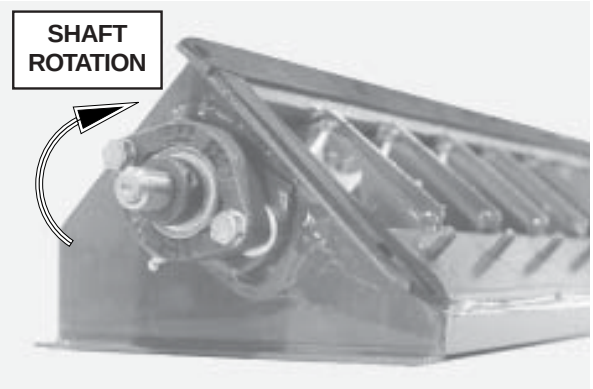

IMPORTANT

PREVENT CORROSION

Clean the Metering Body (Including Air Passages) and the Collector Body. A light coating of Silicone Lubricant or WD-40 or Penetrating Oil should be applied before storage.

N21604

Metering - continued

- Tighten locking collars by turning the collars in the direction of the shaft rotation. Lock the collar by tapping the collar with a punch in the direction of rotation of the shaft.
- Reinstall monitor donut on shaft. Ensure donut is centred to the pick-up. The gap between the pick-up and the donut must not exceed 1/8" (3 mm).
- Install the slider plates to all cups with metering wheels.

Note: Install blank-off covers on cups without wheels. Insert the top of the blank-off plate under the tank lip.

- Set sliders to top of slot. Tighten sliders with 5/16" stainless steel nut, lockwasher and flatwasher. (See *"Slider Setting"* under Operation Section for correct procedure)
- Attach meter shaft coupler over the meter shaft and transmission drive shaft.
- Install the 1/4" x 2 1/4" Special bolt with two - flatwashers and locknut. **Tighten locknuts to bottom of threads.**

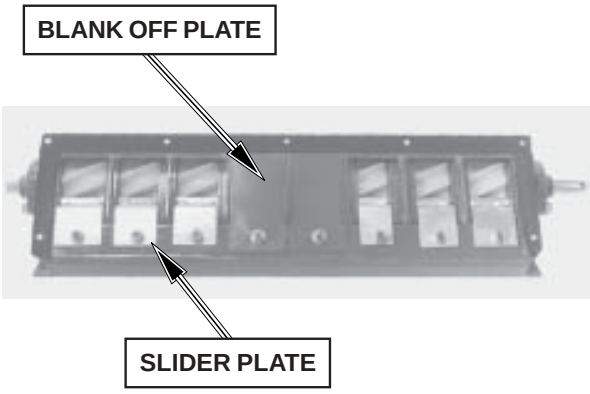

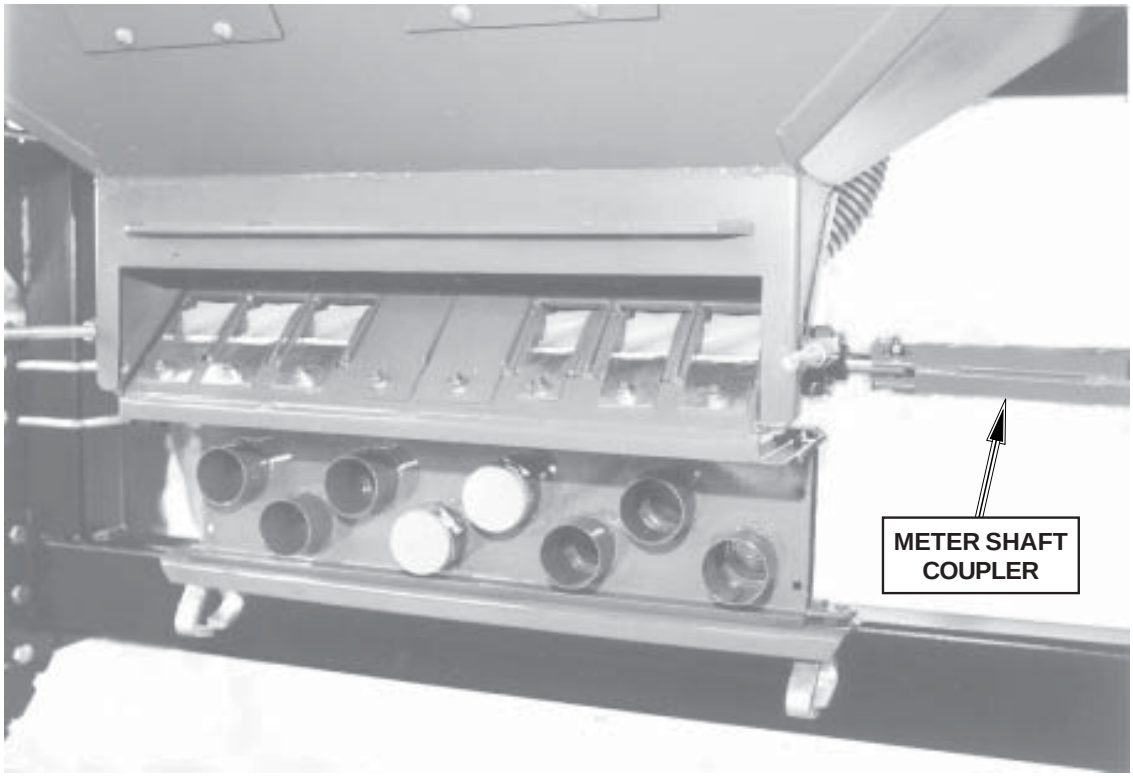

Auger Arm Lock

Adjust 5/8 nuts such that the auger arm is unlocked when the handle is horizontal and locked when the handle is pulled down 90 degrees.

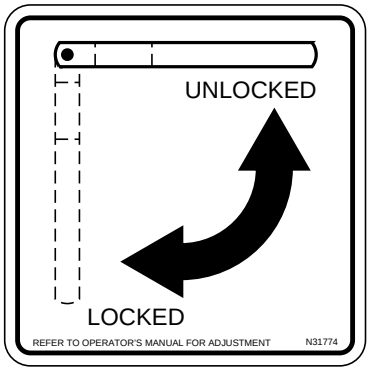

Auger Arm Lock

Auger Pre-Load Adjustment

The pre-load must be adjusted to firmly seat the auger on the front pivot pin when locked into storage position.

To adjust the pre-load on the auger the Middle Pivot Saddle washers/bushings must be moved as follows:

- To **decrease** the pre-load move washers/bushings from bottom to the top of arm.
- To **increase** the pre-load move washers/bushings from top to the bottom of arm.

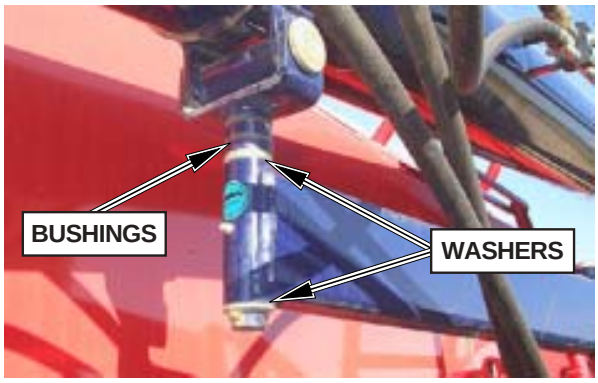

Middle Pivot Saddle

2-3 Meter Cart

Castor Fork Adjustment

Adjust castor wheel action to prevent excessive movement.

- Remove dust cap from castor axle.
- Tighten bolt to adjust pressure on castor drag plate to restrict excess castor movement.
- Lossen bolt to adjust pressure on castor drag plate to increase castor movement.
- Check tire pressures. Tires must be inflated evenly to ensure correct tracking.

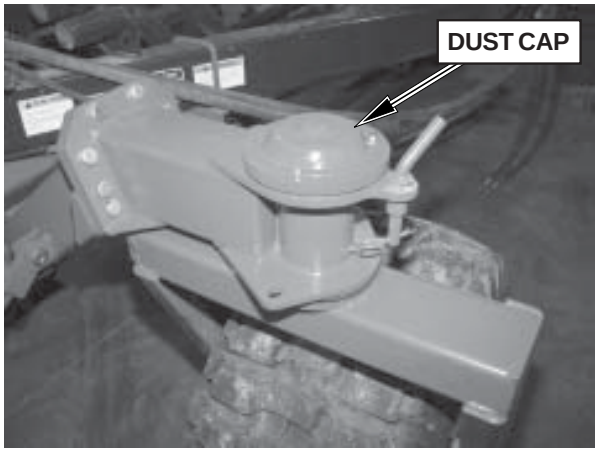

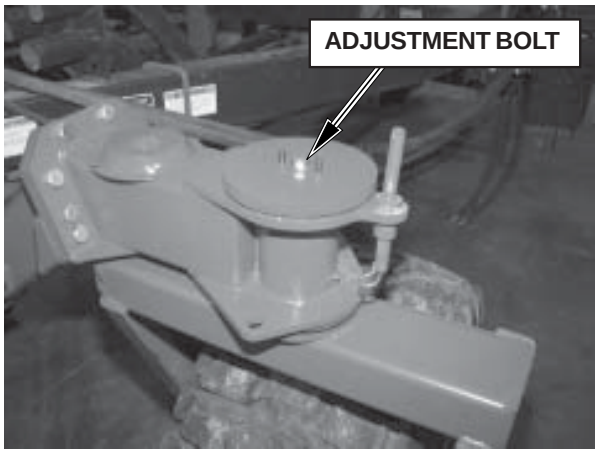

Notes

Section 8: Storage

Section Contents

Preparing for Storage 8-2
General 8-2
Preparing for Storage - continued 8-3
Metering Body Storage 8-3
Preparing for Storage - continued 8-4
Engine Storage: 8-4
Removing From Storage 8-5
General 8-5
Monitor 8-5
Clutch 8-5
Auger 8-5

Preparing for Storage

General

- To insure longer life and satisfactory operation, store the 7000 Series Air Cart in a shed.
- If building storage is impossible, store away from areas of main activity on firm, dry ground.
- Clean machine thoroughly.
- Inspect all parts for wear or damage.
- Avoid delays - if parts are required, order at the end of the season.
- Lubricate grease fittings. (Refer to Lubricating Section).
- Tighten all bolts to proper specifications (Refer to Bolt Torque Chart).
- To prevent corrosion and damage by rodents, clean the hopper boxes and metering systems thoroughly and wash with mild soapy water solution. Rinse with water and dry thoroughly. **Refer to Metering Body Storage.**
- A light coating of silicone lubricant or WD-40 should be applied to all metal metering system components before storage.
- Avoid lubricant contact with grain and fertilizer tubes.
- Loosen fan tension adjusting bolt. (Engine Drive Only)
- Relieve tension on tank lids.
- Loosen clean-out doors.
- Remove all chains and store in clean oil.
- Relieve pressure from hydraulic system.
- Raise frame, block up and relieve weight from the tires.
- Cover tires with canvass to protect them from the elements when stored outside.
- Paint any surfaces that have become worn.

Warning

Do not allow children to play on or around the machine.

MORRIS PAINT

Spray Cans:

Part Number	Description
W-4647	Red MORRIS Spray Can
W-4648	Blue MORRIS Spray Can
N31087	White MORRIS Spray Can

Litre Cans:

Part Number	Description
Z-10	Red MORRIS Paint/Litre
Z-11	Blue MORRIS Paint/Litre

Preparing for Storage - continued

Metering Body Storage

It is extremely important that the metering system is thoroughly cleaned before storing for any length of time.

The following procedure should be followed for both tanks:

- Empty tanks. (Refer to Unloading Tanks)
- Remove all sliders and blank off plates.
- Remove cover plate.
- Remove the collector bottom.
- Run fan.
- Wash the interior of both tanks and metering system with soapy water. Wash the collector.
- Rinse with cold water and let the unit air dry.
- Coat metal parts with silicone lubricant or WD-40.

Note: Diesel fuel will harm seals.

- Reinstall all sliders and blank off plates in the same order they were removed.
- Reinstall cover plate.
- Replace the clean-out door and the bottom of the collector.
- Start the fan and operate for 5 minutes to dry out any remaining moisture in the system.
- Leave clean-out doors loose to help prevent condensation building up inside the tank.
- Leave lid latches loose to help maintain resilience of the seals.

IMPORTANT

PREVENT CORROSION

Clean the Metering Body (Including Air Passages) and the Collector Body. A light coating of Silicone Lubricant or WD-40 or Penetrating Oil should be applied before storage.

N21604

Important

At no time should corrosive fertilizer or similar materials be allowed to remain in the tank or metering body cavity.

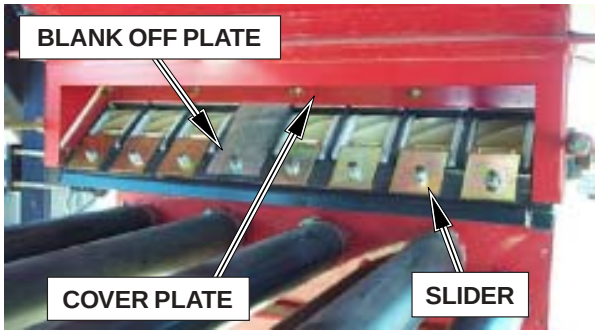

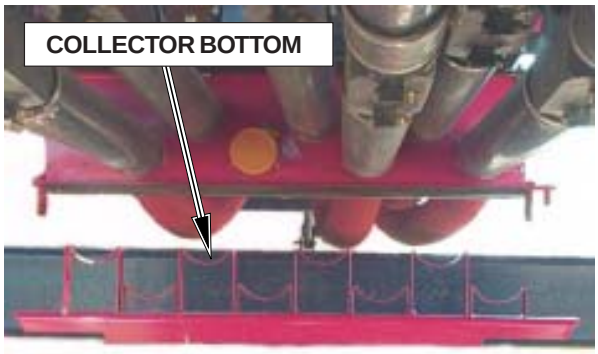

Preparing for Storage - continued

Engine Storage:

To prolong life, it is recommended that the following be done when the unit is stored for any long period of time.

- Warm up engine and change oil and filter.
- Drain fuel tank and fuel system.
- Remove spark plugs. Add 1/2 ounce of engine oil into each cylinder. Install spark plugs but not the plug leads. Crank engine two or three revolutions.
- Clean exterior of engine. Coat exposed metal with or light film of oil to prevent rusting.
- Cover engine to protect it from the elements.
- Loosen fan tension adjusting bolt.

Removing From Storage

General

- Review Operator's Manual.
- Check tire pressure (Refer to Tire Pressure List)
- Clean machine thoroughly.
- Tighten lid latches.
- Tighten fan tension adjusting bolt. (Engine Drive Only)
- Lubricate and install chains.
- Spray internal parts or the metering body with WD-40 to loosen any corrosion buildup.
- Check for leaks. (Refer to Maintenance Section)
- Lubricate grease fittings. (Refer to Lubricating Section).
- Tighten all bolts to proper specifications (Refer to Bolt Torque Chart).

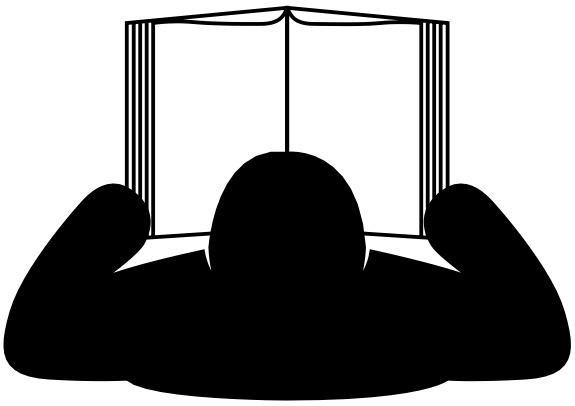

Monitor

Familiarize yourself with all monitor functions. Ensure all monitor *"settings"* are correctly set for the Air Cart/ Seeding Tool combination. Recognize and correct alarm conditions as indicated on the machine. See Monitor Section for more details.

Check all wire harness connections for corrosion and use a dielectric spray to clean. Inspect all sensors for proper gap. See Monitor Section for more details.

Clutch

Check friction plates for corrosion and buff with a wire wheel if necessary. Check the resistance of the clutch. See Maintenance Section for more details.

Auger

Inspect all augers used in handling the products for seeding. Run augers to clean out any debris inside auger so it does not get transferred to the tank.

Notes

Section 9: Troubleshooting

Section Contents

General 9-2
Delivery hoses plugged. 9-2
Hydraulic fan will not turn 9-2
Fan turning too slow 9-2
Front Castor moving too freely. (7240, 7252 & 7300) 9-2
Front Castor moving too freely. (7240, 7252 & 7300) 9-3
Material flowing thru system when unit is stationary and the fan running. 9-3
Material not being divided in distribution head. 9-3
Material not being metered out. 9-3
Plugged seed boots 9-4
Material not being accurately metered out of the metering body. 9-4
Material not being accurately metered out of the metering body. 9-5
2-3 Meter Cart 9-5
Castor Axles have excessive movement. 9-5
Not tracking straight. 9-5
Monitor 9-6
Monitor lights up but does not seem to work. 9-6
No fan display. 9-6
No ground speed display 9-6
No meter speed display. 9-6
No display, no back light. 9-6
No display, no back light. 9-6
Bin indicates always empty. 9-6
Bin indicates always full. 9-7
Blown fuse. 9-7
Engine 9-7
Engine stops or lacks power. 9-7
Engine will not start or is hard to start. 9-7
Engine knocks or pings, skips, backfires, misfires or overheats. 9-7
High fuel consumption. 9-7

Problem	Cause	Correction
General		
Delivery hoses plugged.	Insufficient air flow.	Clean fan impeller blades. Clean fan intake screen. Increase fan rpm.
	Hose sag.	Shorten hoses or add additional supports.
	Seed boots plugged with dirt.	Clean seed boots. See *"Seed Boot Plugging"* below.
	Hose obstruction.	Remove obstruction from hose.
	Air delivery hose partly off manifold.	Reinstall hose properly on manifold.
	Kinked hoses.	Straighten hoses and properly secure them to framework.
	Obstruction in divider head.	Remove access door and clear obstruction from appropriate outlets - be sure to use appropriate screens when filling.
	Exceeding machine's delivery capabilities.	Reduce ground speed and speed up fan.
	Poorly mounted hoses.	Reroute hoses.
	Pulleys loose on shaft. ENGINE DRIVE ONLY	Properly fix pulley to shaft.
	Broken fan belts ENGINE DRIVE ONLY	Replace belts. Ensure fan is rotating clockwise facing the impeller.
	Loose fan belts ENGINE DRIVE ONLY	Tighten fan belt adjusting springs.
Hydraulic fan will not turn	Selector valve in wrong position.	Switch the selector to fan position.
	Hydraulic hoses not connected properly to tractor.	Reverse hydraulic hoses.
	Insufficient oil folw.	Perform flow test.
Fan turning too slow	Flow to hydraulic motor.	Increase flow control setting.
	Low hydraulic pressure.	Check hydraulic pressure 2100 psi.(14469 kPa)min.
Front Castor moving too freely. (7240, 7252 & 7300)	Brake Not adjusted properly.	Adjust brake as necessary. See *"Brake Adjustment"* in Maintenance Section.

Problem	Cause	Correction
Front Castor moving too freely. (7240, 7252 & 7300)	Worn brake pad.	Replace brake pad. See *"Brake Adjustment"* in Maintenance Section.
Material flowing thru system when unit is stationary and the fan running.	Damaged metering wheel.	Replace metering wheel.
	Sliders not adjusted correctly.	Adjust as required. See *"Slider Settings".*
	Small seed plate not installed.	Adjust as required. See *"Slider Settings".*
Material not being divided in distribution head.	Head partially blocked.	Remove blockage and reinstall hose.
	Kinked hose running to shank	Straighten or replace hose.
	Damaged distribution section on head.	Replace head with new one.
	Bent or damaged diffuser pipe.	Straighten or replace diffuser pipe.
	Secondary hose length.	See "Secondary Hose" in Operation Section.
Clutch slipping.	Low power supply.	Ensure good connections at the power supply. Battery voltage must be 12V.
	Metering drive torque load too high.	See Maintenance Section.
	Corroded, rusty, dirty clutch.	Clean and inspect clutch.
	Faulty clutch.	Replace clutch.
Material not being metered out.	Metering clutch not engaged.	Engage switch in tractor cab.
	Metering Clutch slipping.	See *"Clutch Slipping"* below.
	Main drive chain not installed.	Install drive chain properly on Drive Sprocket.
	Drive chain or chains broken.	Install new chain. Ensure connecting link is installed correctly. Curved part of spring clip should face the direction of chain travel.
	Massive air leak in tank, resulting in material being blown up out of the metering cup.	Repair the air leak. See "Air Leaks" in Maintenance Section. See "Tank Lid Adjustment" in Maintenance Section.
	Key sheared on metering wheel.	Change metering wheel and check for cause of metering wheel shearing.

Problem	Cause	Correction
Material not being metered out.	Material caked up in tank.	Remove material and completely clean out the tank.
	Excessively wet material in tank.	Remove wet material and use reasonably dry material.
	Coupler bolt sheared	Replace with Grade 8 bolt.
Plugged seed boots	Backing up with openers near or in the ground.	Lift machine all the way up before backing up.
	Turning very sharp with openers near or in the ground.	Lift machine all the way up when making sharp turns.
	Lowering machine without any forward motion.	Always have forward motion when lowering machine.
	Worn openers or sweeps.	Replace openers.
	Severely bent or damaged boots.	Straighten or replace as required.
	Excessively wet conditions.	Change openers, operate when drier.
	Opener Adjustment.	See *"Opener Adjustment"* in Operation Section.
Material not being accurately metered out of the metering body.	Air delivery hoses loose, cracked or pulled off.	Tighten the hoses, replace cracked hoses or install hoses pulled off their respective locations.
	Metering Clutch slipping.	See *"Clutch Slipping"* below.
	Inlet screen to fan blocked off.	Clean off material that is blocking the fan screen.
	Metering wheel slider plate adjusted incorrectly.	Adjust sliders so they are all the same for the product being metered. See Operation Section for correct clearances.
	Material caked up above one or more of the metering cups.	Clean out caked up material.
	Excessively damp material in tank.	Use reasonably dry, fresh material only.
	Foreign obstruction in tank above metering wheels.	Remove obstruction, and always fill tanks through the screen.

Problem	Cause	Correction
Material not being accurately metered out of the metering body.	Caked up metering wheels on some or all of the metering cups.	Clean out the metering cups and wheels.
	Damaged metering wheels.	Replace broken metering wheels.
	Metering wheels mismatched to secondary outlet.	Install correct wheels to head. 1 3/4” wide wheel for 7 outlet head. 2” wide wheel for 8 outlet head. 2 1/4” wide wheel for 9 outlet head. 2 1/2” wide wheel for 10 outlet head. Be sure appropriate spacers are also used.
	Incorrect spacing sprocket.	Install correct sprocket on back of transmission. See Maintenance Section.
	Crank rotated wrong way when taking sample.	Crank must be rotated counter clockwise.
	Double Shooting hoses not routed correctly.	See Set-Up Section.
	Air Leak in System.	Adjust lids and doors as necessary. Replace damaged seals. See Maintenance Section.
2-3 Meter Cart		
Castor Axles have excessive movement.	Drag plate adjustment.	Adjust pressure on drag plate.
Not tracking straight.	Tire Pressure uneven.	Inflate tires to correct pressure.
	Axle alignment.	Contact Technical Support for correct location of shims.

Problem	Cause	Correction
Monitor		
Monitor lights up but does not seem to work.	Faulty monitor	Replace monitor.
	Completely disconnected harness.	Connect harness.
No fan display.	Incorrect gap between sensor and target.	Gap should be 0.030” (0.76 mm).
	Faulty sensor.	Replace sensor.
	Broken or shorted wire.	Replace or repair harness.
No ground speed display	Sensor to magnet gap too large.	Gap should be 0.030” (0.76 mm).
	Faulty sensor.	Replace sensor.
	Broken or shorted wire.	Replace or repair harness.
No meter speed display.	Sensor to magnet gap too large.	Gap should be 0.030” (0.76 mm).
	Faulty sensor.	Replace sensor.
	Broken or shorted wire.	Replace or repair harness.
No display, no back light.	Switched off	Switch unit on.
	Poor power connections at the battery.	Ensure good connections.
No display, no back light.	Battery below 8 volts.	Check battery voltage.
	Temperature below -10C or above +40C.	Operate between -10C and +40C.
Bin indicates always empty.	Broken wire.	Repair wire.
	Faulty sensor.	Replace sensor.
	Wires not hooked to sensor.	Hook up correctly.
	Program Setting at 0.	Change Program Setting to 20.

Problem	Cause	Correction
Bin indicates always full.	Blocked light beam on photoelectric sensor.	Remove object blocking the beam.
	Wire shorted to ground	Repair or replace wire.
	Faulty sensor	Replace sensor.
Blown fuse.	Power hooked up backwards.	Hook up correctly. **RED** to positive terminal.

Engine

Engine stops or lacks power.	Dirt in fuel line.	Replace fuel filters.
	Dirty air filter element.	Clean filters as outlined in Section 7.
	No fuel or improper fuel.	Use regular or preferably unleaded gasoline.
	Faulty spark plugs.	Replace.
	High temperature.	Clean air screen and cooling fins. See Maintenance Section.
	Low oil pressure.	Incorrect oil level.
Engine will not start or is hard to start.	Dirt in fuel lines.	Replace Fuel filters.
	Dirty air filter elements.	Clean filter as outlined in Maintenance Section
	No fuel or improper fuel.	Use regular or preferably unleaded gasoline.
	Faulty spark plugs.	Replace.
Engine knocks or pings, skips, backfires, misfires or overheats.	Dirt in fuel filter.	Replace fuel filter.
	Dirty air filter elements.	Clean filter as outlined in Maintenance Section
	Faulty spark plugs.	Replace.
	Incorrect oil level.	Add oil.
	Dirty airscreen and/or cooling fins.	Clean as outlined in Maintenance Section.
High fuel consumption.	Dirty air filter elements	Clean filter as outlined in Maintenance Section

Notes

Section 10: Options Assembly

Section Contents

Hitch Stand Kit (Tow Behind) 9-3
Second Clutch 9-4
Acre Tally 9-4
Mounted Harrow Kit 9-5
Mud Scraper 9-5
7130 & 7180 Tow Behind 9-5
Fertilizer Banding Kit 9-6
Banding Kit (using rear transmission) 9-6
Banding Kit (using front transmission) 9-7
Rear Tow Hitch (Tow Behind) 9-8
Standard Hitch 9-8
Rear Tow Hitch (Tow Behind) 9-9
Extended Hitch 9-9
Rear Tow Hitch (Tow Behind) 9-10
Hitch Extention (Tow Between) 9-11
Three Point Hitch 9-12
Three Point Hitch - continued 9-14
Standard Hydraulics 9-14
Xpress Tow Between Hydraulic Drive 9-16
Auger Spout Extension Kit 9-18
Pin Blockage System 9-19
Option ‘A’ - Full System 9-19
Option ‘B’ - Partial System 9-20
Option ‘B’ - One Sensor per Head - Secondary Hoses 9-21
Option ‘B’ - Two Sensors per Head - Secondary Hoses 9-22
Option ‘B’ - Three Sensors per Head - Secondary Hoses 9-23
Option ‘B’ - Four Sensors per Head - Secondary Hoses 9-24
Installation Procedure 9-25
Wiring Procedure 9-26

Section Contents - continued

Optical Blockage System 9-29
Option ‘A’ - Full System 9-29
Option ‘B’ - Partial System 9-29
Option ‘B’ - One Sensor per Head - Secondary Hoses 9-30
Option ‘B’ - Two Sensor per Head - Secondary Hoses 9-31
Option ‘B’ - Three Sensor per Head - Secondary Hoses 9-32
Option ‘B’ - Four Sensor per Head - Secondary Hoses 9-33
Installation Procedure 9-34

Hitch Stand Kit (Tow Behind)

- Attach the mounting plates to the hitch pole using three - 3/8” x 4” bolts, lockwashers and nuts.

Note: Locate hitch stands in a position which will clear any attachments on the Seeding Tool. (i.e. Mounted Harrows, Packers, etc.)

- Mount the outer tube between mounting plates with a 1/2” x 4 1/2” bolt, lockwasher and nut.
- Slide inner tube into outer tube retaining with the tightener.
- Retain stand with a 5/8” pin and hair pin.

Attached/Detached Position

Transport Position

Second Clutch

- Remove the metering shaft coupler from the rear metering shaft.
- Mount coupler to the clutch using 1/4” x 3/4” bolts.
- Install the clutch and coupler to the transmission output shaft with a 1/4” x 1 1/2” spiral pin on either side of the clutch.

Note: Install extra flatwashers as required to eliminate excess clearance between clutch components.

- Install the short metering shaft coupler.
- Install the 3/8” x 4” bolt into the hole in the rear transmission plate.
- Run the cable down the left hand Air Seeder hitch pole.
- Run the extension cable along the left hand hitch pole of the Seeding Tool.
- Connect cable to the auxiliary clutch switch quick coupler.

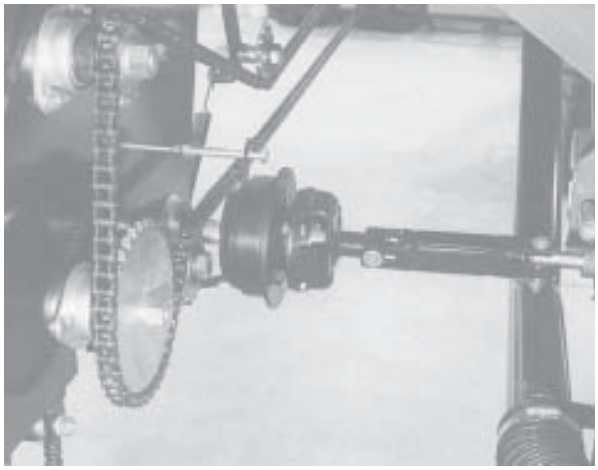

Second Clutch

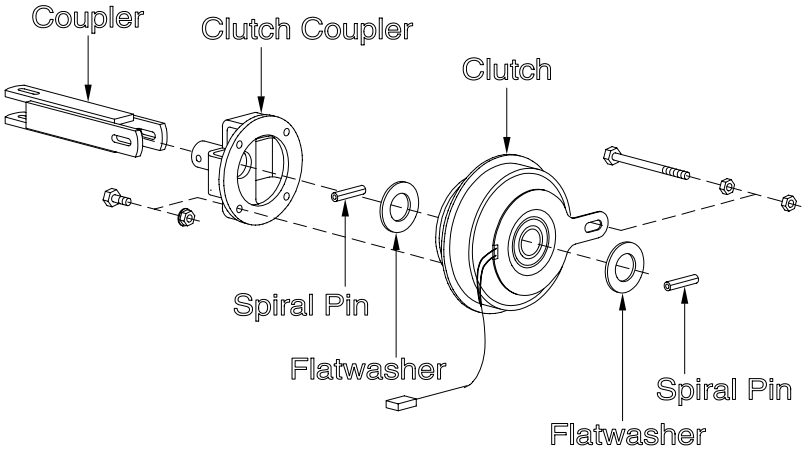

Acre Tally

- Install the tamper proof acre tally to the crank handle shaft as shown.

Acre Tally

Mounted Harrow Kit

- Mount the harrow bracket as shown with two 1/2" U-bolts, lockwashers and nuts.
- Attach the harrow arm to the bracket with four 1/2" x 1 3/4" bolts, lockwashers and nuts.
- Mount harrow to the harrow arm.
- Repeat above procedure for the other harrow.

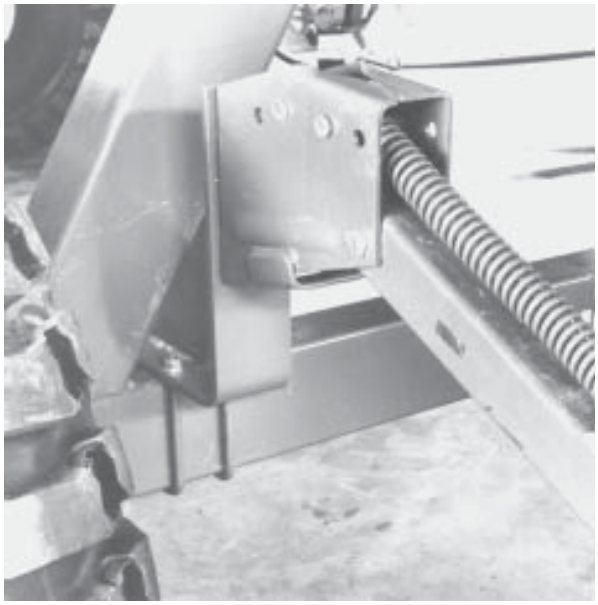

Mud Scraper

7130 & 7180 Tow Behind

- Slide the mud scraper into place.
- Attach mud scraper with 5/8" x 1 1/2" bolts, lockwashers and nuts.
- Secure all the bolts.

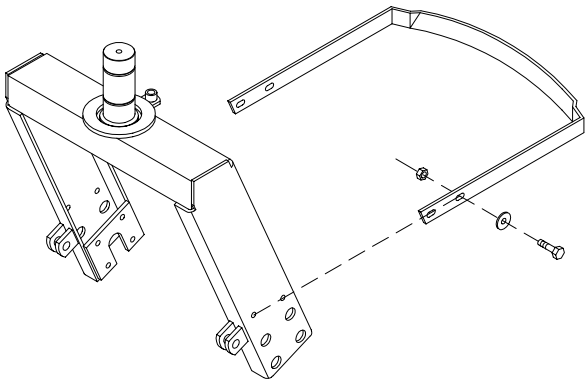

Important

DO NOT EXCEED 20 M.P.H.
The front castor tire will contact the mud scraper if towing speeds exceed 20 M.P.H. causing severe damage to the tire and mud scraper.

Fertilizer Banding Kit

Banding Kit (using rear transmission)

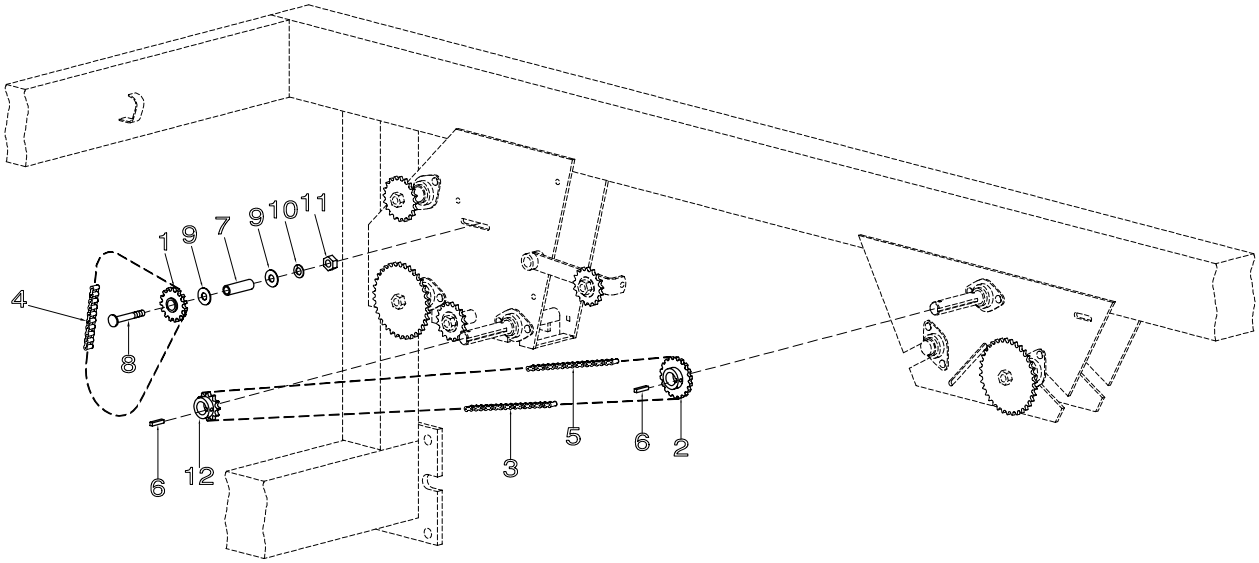

Item	Part No.	Description	Qty
1	D-5234	Nylon Idler - 40B15	1
2	N19237	Sprocket - 40B18	1
3	N27633	Chain - #40 x 47 Links w/Connector & Offset Link 7240 / 7300 ONLY	1
4	N19774	Chain - #40 x 72 Links w/Connector	1
5	N27631	Chain - #40 x 223 Links w/Connector & Offset Link	1
6	S10730	Key - 1/4 x 1/4 x 1 1/4 Lg	2
7	N19460	Bushing - 2 1/2 Lg	1
8	N19283	Carriage Bolt - 3/8 x 3 1/2 Lg	1
9	N19706	Flatwasher - 3/8	2
10	W-523	Lockwasher- 3/8	1
11	W-514	Hex Nut - 3/8	1
12	D17946	Sprocket - 40B12	1
	N27849	Fertilizer Banding Kit (Includes Items from Options 1 & 2 pg. 2-7 & 2-8) (Order Through Wholegoods)	
		See Section 12 for rate settings.	

Fertilizer Banding Kit - continued

Banding Kit (using front transmission)

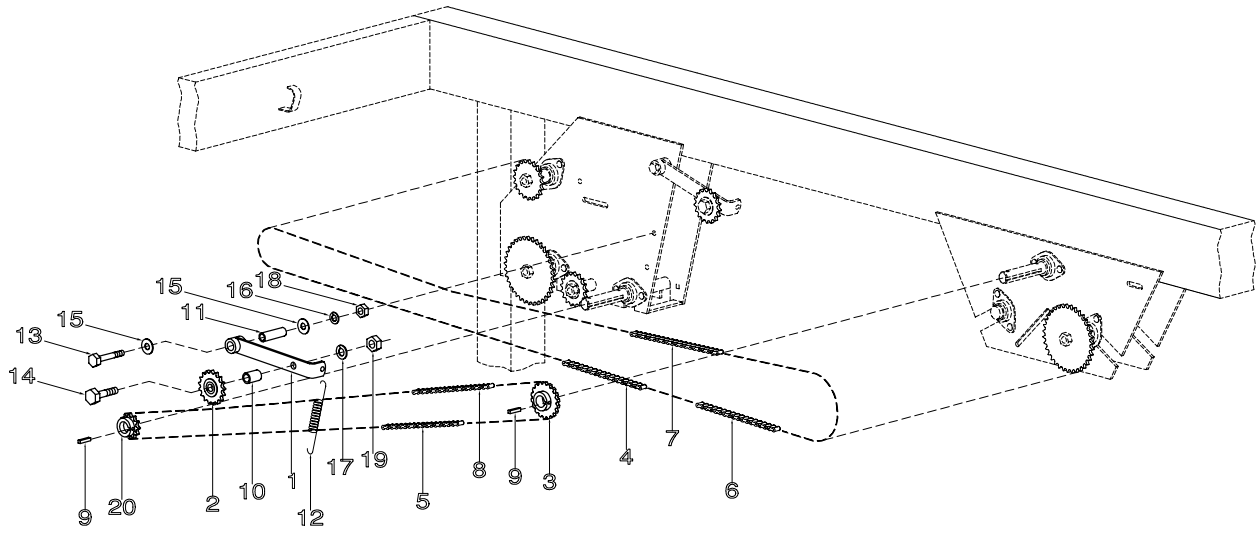

Item	Part No.	Description	Qty
1	N19261	Idler Arm	1
2	D17808	Sprocket - 40A17	1
3	N19237	Sprocket - 40B18	1
4	N27632	Chain - #40 x 40 Links w/Connector 7240 / 7300 ONLY	1
5	N27633	Chain - #40 x 47 Links w/Connector & Offset Link 7240 / 7300 ONLY	1
6	N19774	Chain - #40 x 72 Links w/Connector	1
7	N21024	Chain - #40 x 217 Links w/Connector & Offset Link	1
8	N27631	Chain - #40 x 223 Links w/Connector & Offset Link	1
9	S10730	Key - 1/4 x 1/4 x 1 1/4 Lg	2
10	N19577	Bushing - 7/8 Lg	1
11	N19460	Bushing - 2 1/2 Lg	1
12	W-1663	Spring - 23/32 OD x 7 9/16 Lg	1
13	D-5249	Hex Bolt - 3/8 x 3 1/4 Lg	1
14	W-501	Hex Bolt - 5/8 x 2 1/2 Lg	1
15	N19706	Flatwasher - 3/8	2
16	W-523	Lockwasher - 3/8	1
17	W-526	Lockwasher - 5/8	1
18	W-514	Hex Nut - 3/8	1
19	W-517	Hex Nut - 3/8	1
20	D17946	Sprocket - 40B12	1
	N27849	Fertilizer Banding Kit (Includes Items from Options 1 & 2 pg. 2-7 & 2-8) (Order Through Wholegoods)	
		See Section 12 for rate settings.	

Rear Tow Hitch (Tow Behind)

Standard Hitch

- Attach the upper brackets to the Air Cart frame with a 5/8” x 4” x 5 9/16” U-bolt, lockwashers and nuts. (Approximately 26” above lower frame member)
- Attach the lower brackets to the Air Cart frame with a 5/8” x 6” x 5 1/2” U-bolt, lockwashers and nuts.
- Attach the hitch tubes to the brackets using 3/4” x 2 1/4” bolts, lockwashers and nuts.
- Install the hitch clevis between the tubes using 3/4” x 2 1/4” bolts, lockwashers and nuts.
- Level hitch clevis and hitch tubes.
- Tighten all bolts securely.

Note: Leave all bolts loose for initial assembly.

Rear Tow Hitch (Tow Behind)

Extended Hitch

- Attach the upper brackets to the Air Cart frame with a 5/8” x 4” x 5 9/16” U-bolt, lockwashers and nuts. (Approximately 26” above lower frame member)
- Attach the lower brackets to the Air Cart frame with a 5/8” x 6” x 5 1/2” U-bolt, lockwashers and nuts.
- Attach the hitch tubes to the brackets using 3/4” x 2 1/4” bolts, lockwashers and nuts.
- Install the hitch tongue between the lower hitch tubes using 3/4” x 2 1/4” bolts, lockwashers and nuts.
- Install the hammer strap to hitch tongue between the upper hitch tubes using a 3/4” x 6 1/2” bolt, bushing - 1 1/4” OD x 3 1/16” lg, lockwasher and nut.
- Secure hammer strap above hitch tongue with a 3/4” x 5 bolt, lockwasher and nut.

Note: Hammer strap can be flipped back to accommodate different hitches.

- Tighten all bolts securely.

Note: Leave all bolts loose for initial assembly.

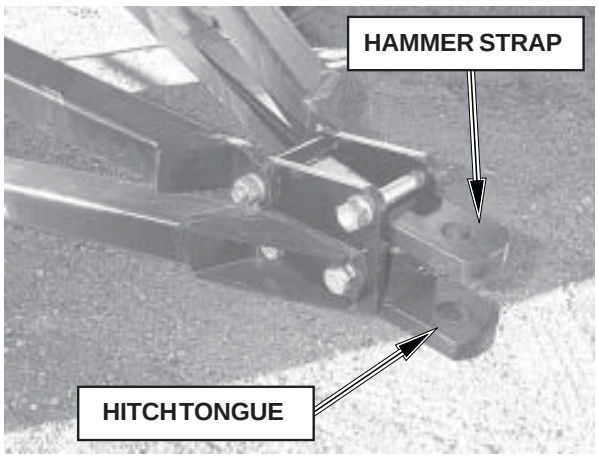

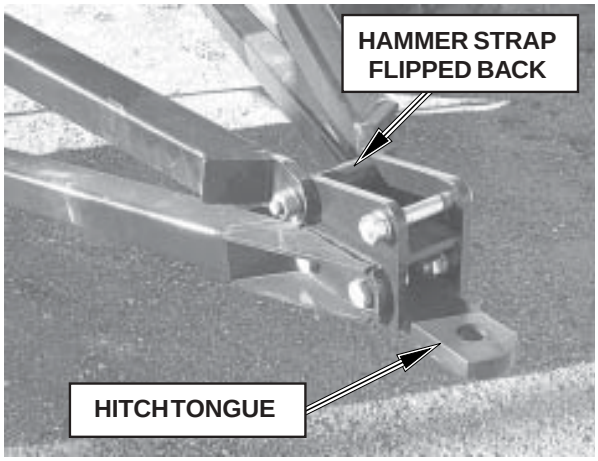

Rear Tow Hitch (Tow Behind)

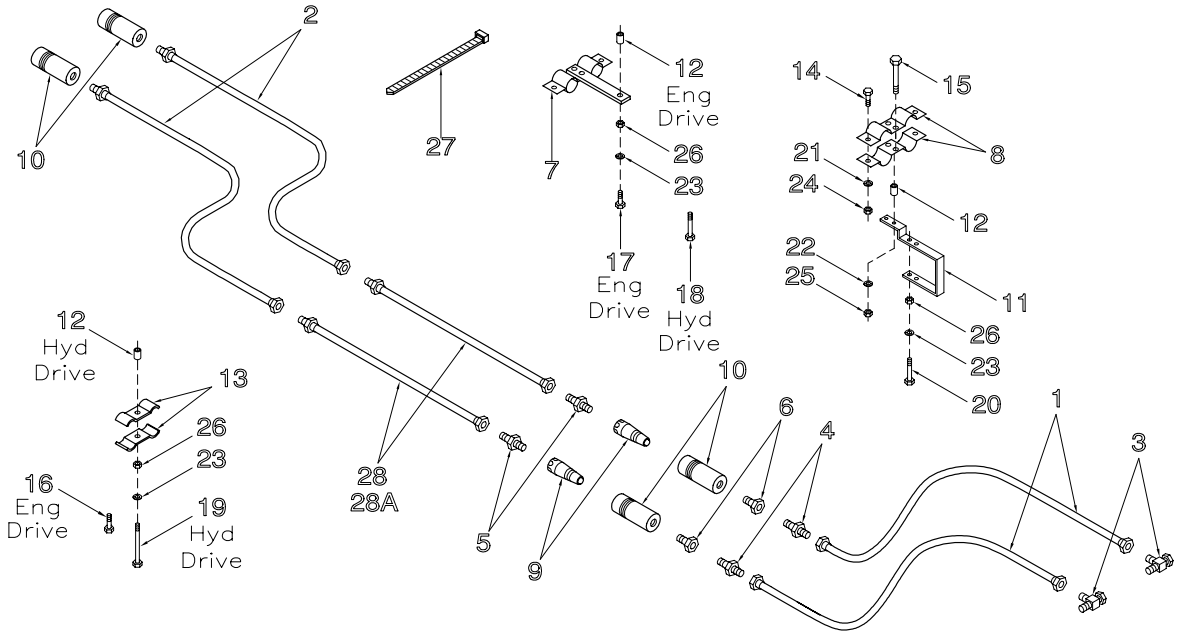

Item	Part No.	Description	Qty
1	H18267	Hyd Hose - 1/4 x 96 Lg w/9/16-18 FJIC	2
2	N15041	Hyd Hose - 1/2 x 293 Lg w/7/8-14 FJIC x 1/2 MNPT	2
3	C-4403	Tee - (2) 9/16-18 MJIC x (1) 9/16-18 FJIC	2
4	C-4405	Connector - 9/16-18 MJIC x 3/8 MNPT	2
5	C-4399	Connector - 7/8-14 MJIC x 1/2 MNPT	2
6	C-719	Reducer - 1/2 MNPT x 3/8 FNPT	2
7	S-1379	Pioneer Coupler Assembly	1
8	N16608	Pioneer Clamp	2
9	C-817	Male Pioneer Tip - 1/2 FNPT	2
10	C-818	Pioneer Coupler - 1/2 FNPT	4
11	N21691	Mounting Bracket	1
12	N16257	Spacer	3
13	D-4808	Oil Line Clamp	2
14	W-469	Hex Bolt - 1/4 x 3/4	2
15	W-473	Hex Bolt - 5/16 x 1 1/2	2
16	W-187	Hex Bolt - 3/8 x 1 1/4	1
17	W-619	Hex Bolt - 3/8 x 1 3/4	1
18	D-5249	Hex Bolt - 3/8 x 3 1/4	1
19	S-1299	Hex Bolt - 3/8 x 4 1/2	1
20	C-3918	Hex Bolt - 3/8 x 5	1
21	W-521	Lockwasher - 1/4	2
22	W-522	Lockwasher - 5/16	2
23	W-523	Lockwasher - 3/8	3
24	W-512	Hex Nut - 1/4	2
25	W-513	Hex Nut - 5/16	2
26	W-514	Hex Nut - 3/8	3
27	D-4838	Tie Strap	6
28	C-4385	Hyd Hose - 1/2 x 24 Lg w/7/8-14 MJIC x 7/8-14 FJIC 7130 /7180	2
28A	C15310	Hyd Hose - 1/2 x 72 Lg w/7/8-14 MJIC x 7/8-14 FJIC 7240 / 7252 / 7300	2
	H27842	Kit - Hydraulic Extension - 7130 / 7180 (Includes All Items Except #28A)	
	H25645	Kit - Hydraulic Extension - 7240 / 7252 / 7300 (Includes All Items Except #28) (ORDER THROUGH WHOLEGOODS)	

Hitch Extention (Tow Between)

- Attach extended hitch to Air Cart hitch with a 1 1/2”x 6 1/2” UL pin and #19 Hair Pin.
- Secure extended hitch to Air Cart frame with 5/8” x 6” bolts, lockwashers, nuts and mounting plates.

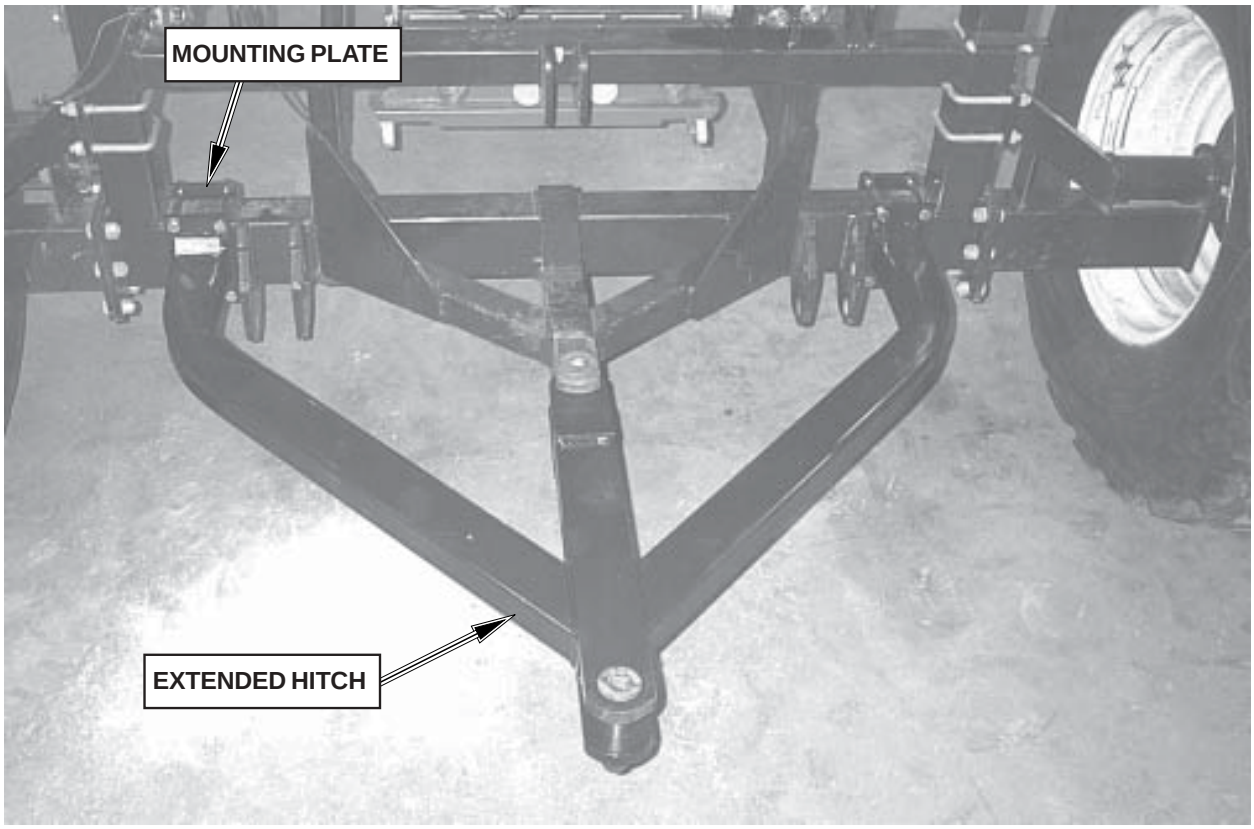

Three Point Hitch

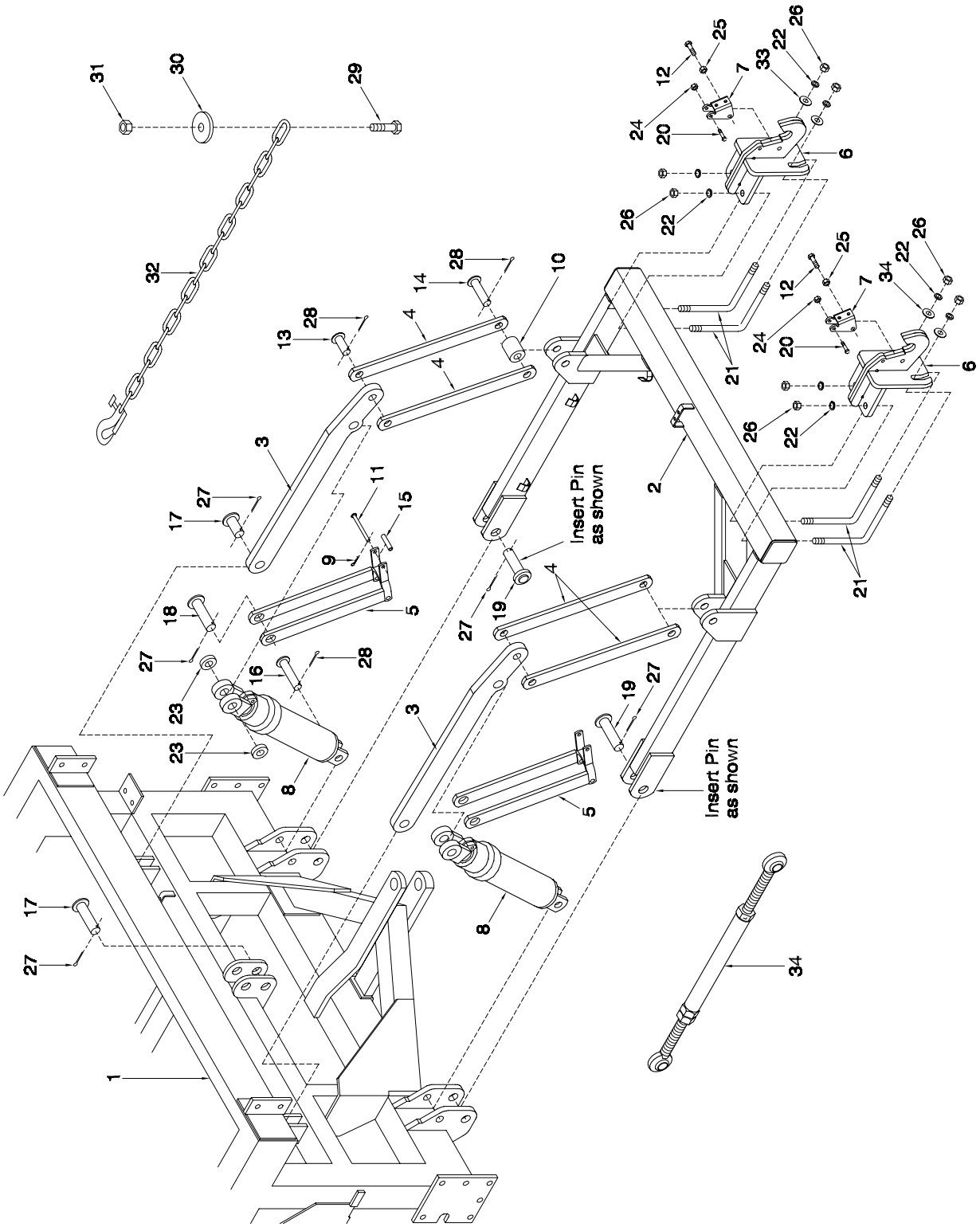

Three Point Hitch - continued

Item	Part No.	Description	Qty
1	N28370	Frame - 7180 Tow Between/Three Point Hitch	1
	N28375	Frame - 7240 Tow Between/Three Point Hitch	1
2	N28960	Three Point Hitch Frame	1
3	N28954	Lever Arm	2
4	N28962	Lift Arm	4
5	N34550	Transport Lock	2
6	N34550	Lower Link	2
7	N28966	Rocker Plate	2
8	C26300	Cylinder - 4 x 12 Lg	2
9	D17315	Hairpin -#3 - 0.094 x 1 21/32 Lg	2
10	N34361	Bushing	2
11	N28953	Pin - 3/8 x 4 1/4 UL	2
12	W-489	Hex Bolt - 1/2 x 2 1/4 Lg	2
13	W-558	Pin - 1 x 2 1/4 UL	2
14	W-1429	Pin - 1 x 3 3/8 UL	2
15	N31313	Sleeve - Transport Lock Pin	2
16	F-3645	Pin - 1 x 5 1/4 UL	2
17	N28997	Pin - 1 1/4 x 2 1/4 UL	2
18	N28994	Pin - 1 1/4 x 4 1/4 UL	2
19	N32735	Pin - 1 1/4 x 5 1/4 UL	2
20	W-479	Hex Bolt - 3/8 x 2 1/4 Lg	2
21	N34554	L-Bolt - 3/4 x 4 x 4 LL	4
22	W-527	Lockwasher - 3/4	8
23	N13962	Washer - 2 1/2 OD x 1.281 ID x 1/4	4
24	M-3388	Locknut - 3/8 Unitorque	2
25	F-3405	Lock Nut - 1/2	2
26	W-518	Hex Nut - 3/4	8
27	D-5239	Cotter Pin - 1/4 x 2 1/4 Lg	6
28	W-535	Cotter Pin - 1/4 x 1 1/2 Lg	6
29	N28971	Turnbuckle	1
30	C12609	Hex Bolt - 1 x 4 1/2 Lg	1
31	N19605	Washer	1
32	T-5276	Lock Nut	1
33	C18761	Chain - Safety - 3/8 P-7 AG - 30,000 lb	1
34	W-541	Washer - 2” OD x 0.813” ID x 10GA	2

Note: Turnbuckle is not supplied with Xpress three point hitch assembly.

Three Point Hitch - continued

Standard Hydraulics

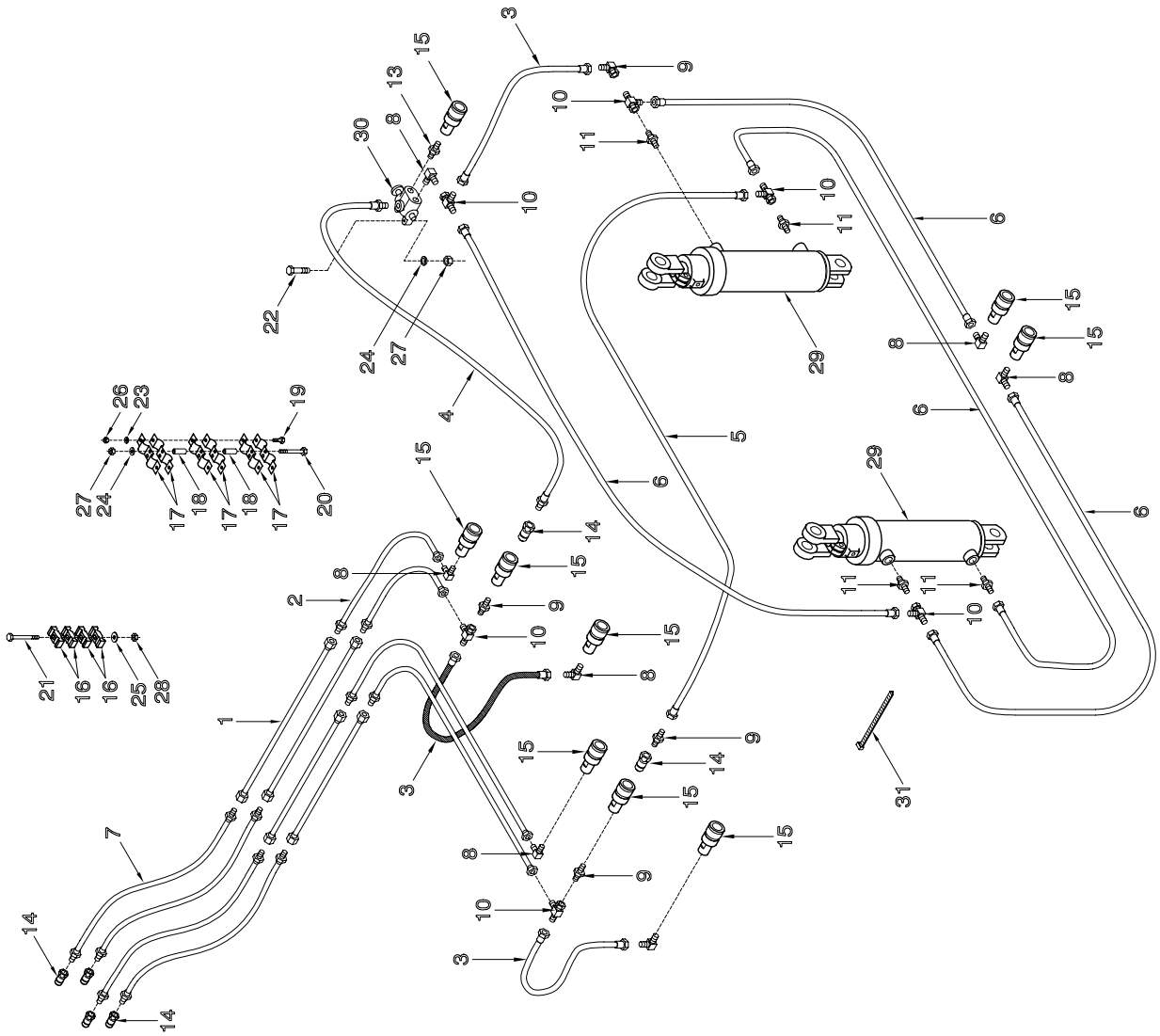

Three Point Hitch - continued

Standard Hydraulics

Item	Part No.	Description	Qty
1	C-4367	Oil Line - 5/8 x 80 Lg	4
	C-4369	Oil Line - 5/8 x 96 Lg	4
2	C-4385	Hyd Hose - 1/2 x 24 Lg w/7/8-14 MJIC x 7/8-14 FJIC	4
3	C-4468	Hyd Hose - 1/2 x 24 Lg w/7/8-14 FJIC x 7/8-14 FJIC	3
4	C-1482	Hyd Hose - 1/2 x 32 Lg w/1/2 MNPT	1
5	C-4404	Hyd Hose - 1/2 x 36 Lg w/7/8-14 FJIC x 7/8-14 FJIC	1
6	C18779	Hyd Hose - 1/2 x 72 Lg w/7/8-14 FJIC x 7/8-14 FJIC	4
7	N19548	Hyd Hose - 1/2 x 132 Lg w/7/8-14 MJIC x 1/2 MNPT	4
8	C-4400	90 Elbow - 7/8-14 MJIC x 1/2 MNPT	7
9	K-5806	90 Swivel Elbow - 7/8 MJIC x 7/8 FJIC	1
10	H18746	Swivel Tee - 2 x 7/8-14 MJIC x 7/8-14 FJIC	6
11	C14840	Male Connector - 1/2 Morb x 5/8 MJIC	4
12	C-4399	Male Connector - 7/8-14 MJIC & 1/2 MNPT	3
13	K21212	NPT Male Union	1
14	C-817	Male Pioneer Tip - 1/2 FNPT	6
15	C-818	Pioneer Coupler - 1/2 FNPT	9
16	C-4698	Nylon Oil Line Clamp	8
17	N16608	Coupler Clamp - Female Pioneer	6
18	N19458	Spacer - 2"	4
19	W-469	Hex Bolt - 1/4 x 3/4 Lg	6
20	N31314	Hex Bolt - 5/16 x 5 1/2 Lg	2
21	C-1550	Hex Bolt - 3/8 x 4 Lg	2
22	W-474	Hex Bolt - 5/16 x 1 7/8 Lg	2
23	W-521	Lockwasher - 1/4	6
24	W-522	Lockwasher - 5/16	4
25	W-538	Flatwasher - 3/8	2
26	W-512	Hex Nut - 1/4	6
27	W-513	Hex Nut - 5/16	4
28	M-3388	Locknut - 3/8 Unitorque	2
29	C26300	Cylinder - 4 x 12 Lg	2
30	S-4730	Selector Valve - 2 Way (Seal Kit - N31601)	1
31	D-4838	Nylon Tie Strap - 14 1/2 Lg	8

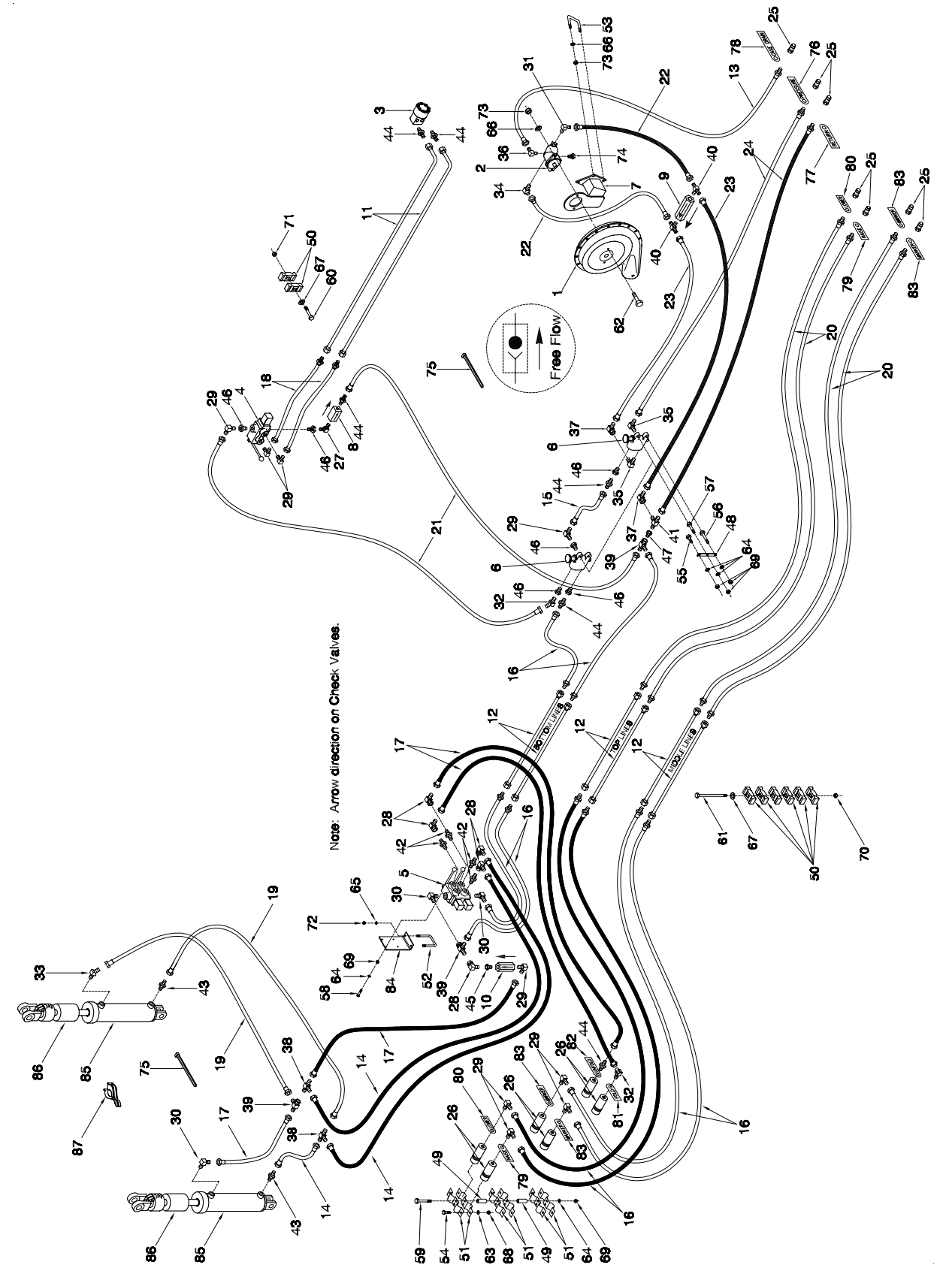
Free Flow
Note: Arrow direction on Check Valves.
TOP LINE
MIDDLE LINE

Fan & Auger Drives - Xpress Tow Between Hydraulic Drive

Item	Part No.	Description	Qty
1	N16263	Fan (See pg 7-2)	1
2	N29372	Hydraulic Motor - Rexroth - 12cc	1
	N25508	Seal Kit for Rexroth Motors - 12cc	
	N25507	Seal Only for Rexroth Motors 12cc	
3	N15982	Orbit Motor	1
	N16731	Seal Kit for N15982	
	N25319	Shaft for N15982	1
4	N15024	Control Valve	1
	N31605	Seal Kit for N15024	
	N24595	Handle for N15024	1
5	N34048	Control Valve - Dbl Spool	1
	N34087	Seal Kit for N34048	
	N34051	Handle for N34048	1
6	N19340	Selector Valve - 3/4 FNPT	2
	N31603	Seal Kit for N19340	
	C36358	Knob for N19340	2
7	N31032	Fan Mount Bracket 7180	1
	N31033	Fan Mount Bracket 7240	1
8	N15023	Check Valve - 1/2 FNPT	1
9	N16399	Check Valve - 0 PSI - 1 1/16-12 ORB	1
10	H-5545	Check Valve - 1/2 FNPT	1
11	F-4560	Oil Line - 5/8 x 99 Lg w/90 Bend	2
12	C-4367	Oil Line - 5/8 x 80 Lg (7180)	6
	C-4369	Oil Line - 5/8 x 96 Lg (7240)	6
13	N16181	Hyd Hose - 3/8 x 156 Lg w/9/16-18 FJIC x 1/2 MNPT	1
14	N34366	Hyd Hose - 1/2 x 12 Lg w/7/8-14 FJIC	3
15	C-4383	Hyd Hose - 1/2 x 20 Lg w/7/8-14 FJIC	1
16	C-4385	Hyd Hose - 1/2 x 24 Lg w/7/8-14 MJIC x 7/8-14 FJIC	8
17	C-4468	Hyd Hose - 1/2 x 24 Lg w/7/8-14 FJIC x 7/8-14 FJIC	4
18	C-4387	Hyd Hose - 1/2 x 36 Lg w/7/8-14 MJIC x 7/8-14 FJIC (7180)	2
	C-4389	Hyd Hose - 1/2 x 60 Lg w/7/8-14 MJIC x 7/8-14 FJIC (7240)	2
19	C18779	Hyd Hose - 1/2 x 72 Lg w/7/8-14 FJIC x 7/8-14 FJIC	2
20	N19548	Hyd Hose - 1/2 x 132 Lg w/7/8-14 MJIC x 1/2 MNPT	4
21	N19365	Hyd Hose - 1/2 x 140 Lg w/7/8-14 MJIC x 7/8-14 FJIC (7180)	2
	N21721	Hyd Hose - 1/2 x 180 Lg w/7/8-14 MJIC x 7/8-14 FJIC (7240)	2
22	N25644	Hyd Hose - 3/4 x 35 Lg w/1 1/16-12 FJIC	2
23	N25644	Hyd Hose - 3/4 x 35 Lg w/1 1/16-12 FJIC	2
24	N16454	Hyd Hose - 3/4 x 130 w/1 1/16-12 FJIC x 1/2 MNPT	2
25	C-817	Male Pioneer Tip - 1/2 FNPT	7
26	C-818	Pioneer Coupler - 1/2 FNPT	6
27	N15033	90 Male Elbow - 1/2 MNPT	1
28	K-5806	90 Elbow - 7/8-14 FJIC x 7/8-14 MJIC	5
29	C-4400	90 Male Elbow - 7/8-14 MJIC x 1/2 MNPT	9
30	C24585	90 Male Elbow - 7/8-14 MJIC x 3/4-16 ORB	3
31	N16359	90 Male Elbow - 1 1/16-12 MJIC x 1 1/16-12 ORB	1
32	C-4402	45 Male Elbow - 1/2 MNPT x 7/8-14 MJIC	2
33	C26333	45 Male Elbow - 3/4-16 MORB x 7/8-14 MJIC	1
34	N31096	45 Male Elbow - 1 1/16-12 MJIC x 1 1/16-12 ORB	1
35	N19341	90 Male Elbow - 1 1/16-12 MJIC x 3/4 MNPT	2
36	N16143	90 Male Elbow - 9/16-18 MJIC x 9/16-18 ORB	1
37	N21189	90 Male Elbow - 1 1/16-12 MJIC x 1 1/16-12 FJIC	2
38	C-4994	Male Tee - (3) 7/8-14 MJIC	2
39	H18746	Swivel Tee - (2) 7/8-14 MJIC x 7/8-14 FJIC	3
40	N16388	Male Tee - (2) 1 1/16-12 JIC x (1) 1 1/16-12 ORB	2
41	N19549	Male Tee - (3) 1 1/16-12 JIC	1
42	N34047	Connector - 7/8-14 MJIC x 9/16-18 MORB	4
43	C14840	Connector - 7/8-14 MJIC x 3/4-16 MORB	2
44	C-4399	Connector - 7/8-14 MJIC x 1/2 MNPT	5
45	N40509	Connector - 7/8-14 FJIC x 1/2 MNPT	1
46	N15032	Reducer - 3/4 MNPT x 1/2 FNPT	6
47	N19337	Reducer - 7/8-14 MJIC x 1 1/16-12 FJIC	1
48	N19713	Strap	2
49	N19458	Spacer - 2"	4
50	C-4698	Nylon Oil Line Clamp	16
51	N16608	Coupler Clamp - Female Pioneer	6
52	N15098	U-Bolt - 3/8 x 4 x 5	1
53	H21351	U-Bolt - 1/2 x 6 1/16 x 5 1/16 (7180)	2
	N31034	U-Bolt - 1/2 x 8 1/16 x 5 1/16 (7240)	2
54	W-469	Hex Bolt - 1/4 x 3/4 Lg	6
55	F-1767	Hex Bolt - 5/16 x 3/4 Lg	2
56	C-3035	Hex Bolt - 5/16 x 1 3/4 Lg	2
57	S-1303	Hex Bolt - 5/16 x 2 Lg	2
58	S-1302	Hex Bolt - 5/16 x 2 1/2 Lg	3
59	N31314	Hex Bolt - 5/16 x 5 1/2 Lg	2
60	W-479	Hex Bolt - 3/8 x 2 1/4 Lg	2
61	C-3664	Hex Bolt - 3/8 x 5 Lg	2
62	S-1189	Hex Bolt - 1/2 x 1 3/4 Lg	2
63	W-521	Lockwasher - 1/4	8
64	W-522	Lockwasher - 5/16	13
65	W-523	Lockwasher - 3/8	2
66	W-525	Lockwasher - 1/2	6
67	W-538	Flatwasher - 3/8	4
68	W-512	Hex Nut - 1/4	8
69	W-513	Hex Nut - 5/16	13
70	M-3388	Locknut - 3/8 Unitorque	2
71	D-5279	Serrated Locknut - 3/8	2
72	W-514	Hex Nut - 3/8	2
73	W-516	Hex Nut - 1/2	6
74	N16621	Plug - 9/16-18 UNF ORB	1
75	D-4838	Nylon Tie Strap (black) - 14 1/2 Lg	12
76	N29962	Tag - Hose ID - Air Tank - Fan/Auger - PRESSURE	1
77	N29963	Tag - Hose ID - Air Tank - Fan/Auger - RETURN	1
78	N29964	Tag - Hose ID -Air Tank- Fan/Auger - CASE DRAIN	1
79	S29958	Tag - Hose ID - Depth Control - RAISE	2
80	S29959	Tag - Hose ID - Depth Control - LOWER	2
81	S29960	Tag - Hose ID - Wing Lift - FOLD	1
82	S29961	Tag - Hose ID - Wing Lift - UNFOLD	1
83	N34364	Tag - Hose ID - Wheel Marker	4
84	N34052	Mounting Plate - Control Valve	1
85	C26300	Cylinder - 4 x 12 Lg2	
86	N32069	Spacer - Stroke Control 1.375 ID (Aluminum)	2
87	S25999	Spacer - Cylinder Stroke (Aluminum) Not included with cylin	2
	N19031	Decal - Auger/Fan (Not Shown)	1
	N34026	Decal - Auger/Aux Hyd (Not Shown)	1
	N34288	Decal - Fold/Unfold (Not Shown)	1

Auger Spout Extension Kit

- Remove existing spout from the auger.
- Drill three 1/4” diameter holes 2” from edge of spout and approximately 6 3/8” apart. See fig. 1
- Slide extension onto the spout and install three 1/4” x 3/4” bolts with 1/4” locknuts through the hole in the extension. See fig. 2 & 3

Note: Flatwashers may be required to shim the bolt heads for desired fit.

- Attach the tarp strap to the spout with a 1/4” x 1 1/4” bolt, flatwasher and locknut. See fig. 4
- Install spout assembly onto the auger.

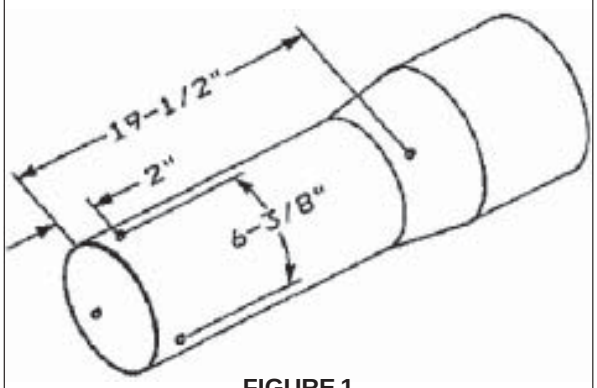

FIGURE 1

FIGURE 2

FIGURE 3

FIGURE 4

Pin Blockage System

There are two options for mounting Blockage Modules and Pin Sensors.

Option 'A' - Full System

- **All** Secondary Hoses have a Pin Sensor.
- One Module Kit #N27066 mounted on each Divider Head on Seeding Tool. (10 Modules Maximum)
- Main lead wire #N27623 (25 ft).
- Extension wire #N16474 (15 ft.) for each additional module **as req'd.**
- Pin Sensor Kits #N30659 (5 ft.) as req'd.

Blockage Module attached to Divider Head

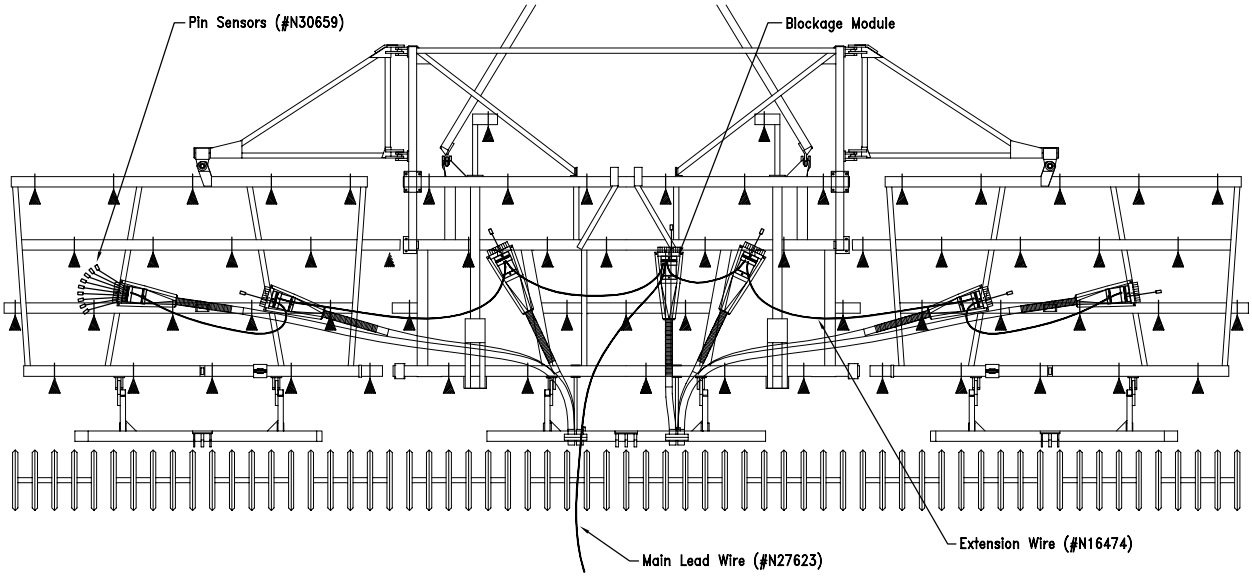

Pin Blockage System - continued

Option 'B' - Partial System

- **Select** Secondary Hoses have a Pin Sensor.
- One Module Kit #N27066 mounted for each Divider Head **- as req'd (See Charts).**
- Main lead wire #N27623 (25 ft).
- Extension wire #N16474 (15 ft.) for each additional module **- as req'd.**
- Pin Sensor Kits **- as req'd (See Charts).**

Blockage Module attached to Divider Head

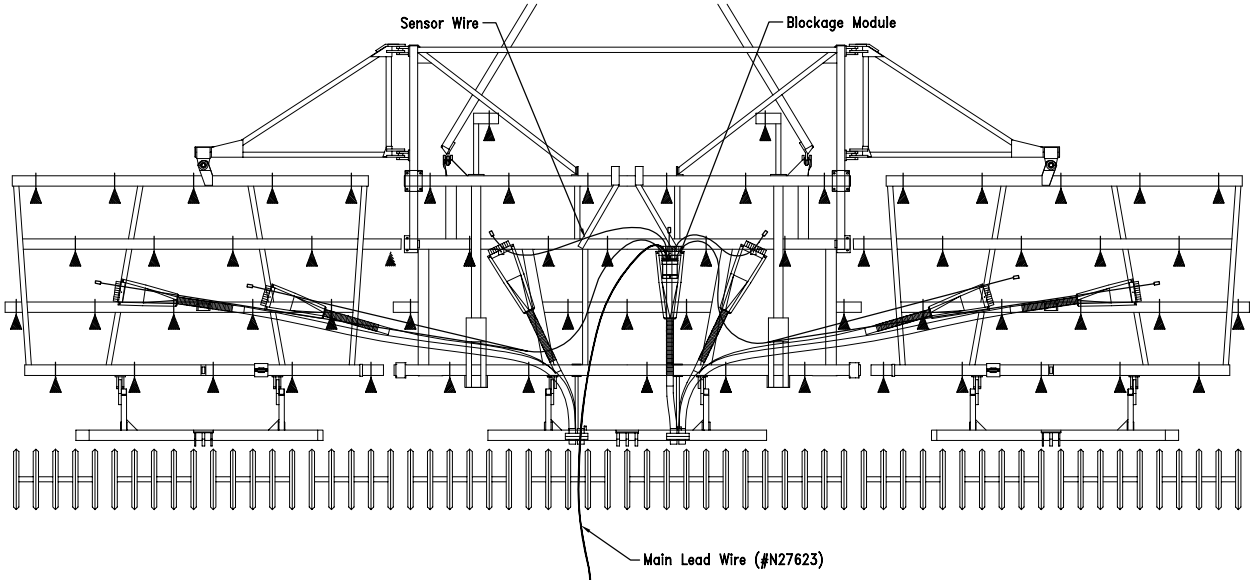

Pin Blockage System - continued

Option 'B' - One Sensor per Head - Secondary Hoses

One Sensor Per Head - Secondary Hoses						
Machine	Pin Sensor Kits Required					Modules Req'd
	5 foot N30659	10 foot N30660	15 foot N30661	20 foot N30662	30 foot N30663	
Maxim II Air Drill 3 frame models						
- 3 heads	1	0	0	2	0	1
- 4 heads	1	1	1	1	0	1
- 5 heads	1	2	1	1	0	1
- 6 heads	1	3	1	1	0	1
- 7 heads	1	2	1	3	0	1
Maxim II Air Drill 5 frame models						
- 6 heads	1	1	1	1	2	1
- 7 heads	2	1	0	2	2	1
- 8 heads (49 ft)	2	2	1	1	2	1
- 8 heads (55 & 60ft)	1	1	2	2	2	1
Concept 2000 3 frame models						
- 3 heads	1	0	0	2	0	1
- 4 heads	1	1	1	1	0	1
- 5 heads (29 ft)	1	0	0	4	0	1
- 5 heads (32 & 38 ft)	3	0	0	2	0	1
- 6 heads	1	1	0	3	1	1
Concept 2000 5 frame models						
- 5 heads	1	0	0	2	2	1
- 6 heads	1	1	1	1	2	1
- 7 heads	2	1	0	2	2	1
- 8 heads	0	2	2	2	2	1

Pin Blockage System - continued

Option 'B' - Two Sensors per Head - Secondary Hoses

Two Sensors Per Head - Secondary Hoses						
Machine	Pin Sensor Kits Required					Modules Req'd
	5 foot N30659	10 foot N30660	15 foot N30661	20 foot N30662	30 foot N30663	
Maxim II Air Drill 3 frame models						
- 3 heads	2	0	0	4	0	1
- 4 heads	2	2	2	2	0	1
- 5 heads	2	4	2	2	0	1
- 6 heads	2	6	2	2	0	1
- 7 heads	2	4	8	0	0	2
Maxim II Air Drill 5 frame models						
- 6 heads	2	2	2	2	4	1
- 7 heads	6	0	4	0	4	2
- 8 heads (49 ft)	8	0	4	0	4	2
- 8 heads (55 & 60ft)	4	0	8	0	4	2
Concept 2000 3 frame models						
- 3 heads	2	0	0	4	0	1
- 4 heads	2	2	2	2	0	1
- 5 heads (29 ft)	2	0	0	8	0	1
- 5 heads (32 & 38 ft)	6	0	0	4	0	1
- 6 heads	2	2	0	6	2	1
Concept 2000 5 frame models						
- 5 heads	2	0	0	4	4	1
- 6 heads	2	2	2	2	4	1
- 7 heads	6	0	0	4	4	2
- 8 heads	4	0	4	4	4	2

Pin Blockage System - continued

Option 'B' - Three Sensors per Head - Secondary Hoses

Three Sensors Per Head - Secondary Hoses						
Machine	Pin Sensor Kits Required					Modules Req'd
	5 foot N30659	10 foot N30660	15 foot N30661	20 foot N30662	30 foot N30663	
Maxim II Air Drill 3 frame models						
- 3 heads	3	0	0	6	0	1
- 4 heads	3	3	3	3	0	1
- 5 heads	6	3	6	0	0	2
- 6 heads	6	6	6	0	0	2
- 7 heads	6	3	12	0	0	2
Maxim II Air Drill 5 frame models						
- 6 heads	6	0	6	0	6	2
- 7 heads	9	0	6	0	6	2
- 8 heads (49 ft)	12	0	6	0	6	2
- 8 heads (55 & 60ft)	6	0	12	0	6	2
Concept 2000 3 frame models						
- 3 heads	3	0	0	6	0	1
- 4 heads	3	3	3	3	0	1
- 5 heads (29 ft)	9	0	3	3	0	2
- 5 heads (32 & 38 ft)	9	0	6	0	0	2
- 6 heads	6	0	0	12	0	2
Concept 2000 5 frame models						
- 5 heads	6	0	3	6	0	2
- 6 heads	6	0	6	0	6	2
- 7 heads	9	0	0	6	6	2
- 8 heads	6	0	6	6	6	2

Pin Blockage System - continued

Option 'B' - Four Sensors per Head - Secondary Hoses

Four Sensors Per Head - Secondary Hoses						
Machine	Pin Sensor Kits Required					Modules Req'd
	5 foot N30659	10 foot N30660	15 foot N30661	20 foot N30662	30 foot N30663	
Maxim Air II Drill 3 frame models						
- 3 heads	4	0	0	8	0	1
- 4 heads	8	0	8	0	0	2
- 5 heads	8	4	8	0	0	2
- 6 heads	16	0	8	0	0	2
- 7 heads	12	16	0	0	0	3
Maxim Air II Drill 5 frame models						
- 6 heads	8	0	8	0	8	2
- 7 heads	16	4	8	0	0	3
- 8 heads (49 ft)	16	8	8	0	0	3
- 8 heads (55 & 60ft)	20	4	8	0	0	3
Concept 2000 3 frame models						
- 3 heads	4	0	0	8	0	1
- 4 heads	8	0	8	0	0	2
- 5 heads (29 ft)	12	0	4	4	0	2
- 5 heads (32 & 38 ft)	12	0	8	0	0	2
- 6 heads	8	0	0	16	0	2
Concept 2000 5 frame models						
- 5 heads	8	0	4	8	0	2
- 6 heads	8	0	8	0	8	2
- 7 heads	20	0	8	0	0	3
- 8 heads	20	0	4	8	0	3

Pin Blockage System - continued

Installation Procedure

1. Module should be mounted vertically as shown or inverted under a Divider Head with 'Drip Loops'.
2. Module should be mounted on the Seeding Tool only. (Mounted to Divider Head)
3. The module must be grounded to Seeding Tool frame. Attach ground wire provided (or 10 GA wire as req'd) to the back mounting plate of module and to Seeding Tool frame for a good ground.

Note: A good ground is essential. Remove paint from any ground contacts.

4. Sensors should be mounted 2 ft away from the divider head to the top side of the secondary hose. Sensors should never be mounted on inside curve of a hose.
5. The pin sensor wire and the module lead wire should always have a 'Drip Loop' to ensure moisture is directed away from the module and pin sensors.
6. Splice secondary hose, connecting bubble into hose with hose clamps.

Note: The sensors should be numbered and should be placed in an orderly fashion in the seed tubes, then connected sequentially to the connector panel (this will make it easier to identify blocked runs).

7. Secure pin sensor to bubble with a tie strap.
8. Disconnect module from main wiring harness at Weather Pak connector when unhooking Air Cart from Seeding Tool.

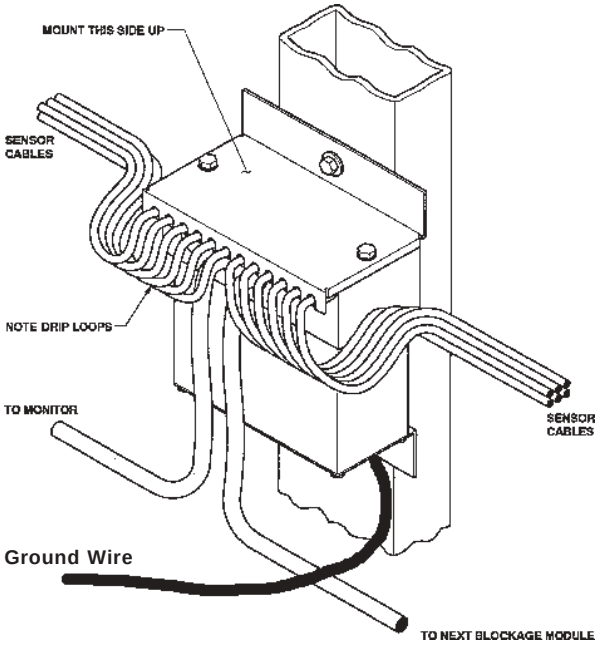

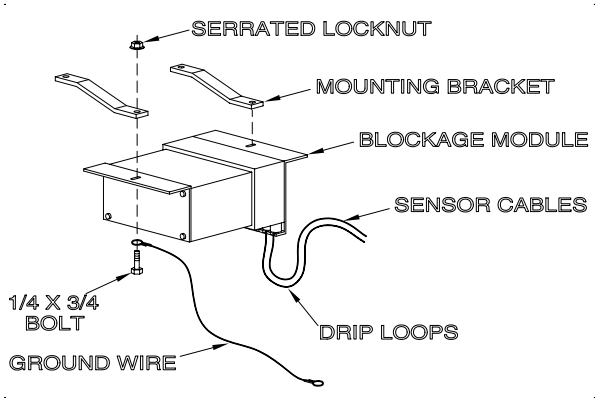

Pin Blockage System - continued

Wiring Procedure

- Remove blockage module housing.
- Feed the cables through the holes in the housing and then attach the push-on connectors on the connector panel of the module as illustrated in figure 3.
- The cable seal and grommet should then be snugly pushed against the housing.
- Set switch **S1 SENSOR**, located on the front of the connector panel, to the number of sensors that are connected to that module.

S1 SENSOR	
Switch Position	**Number of Sensors**
0	Not Used
1 - 9	1 - 9
A	10
B	11
C - F	12

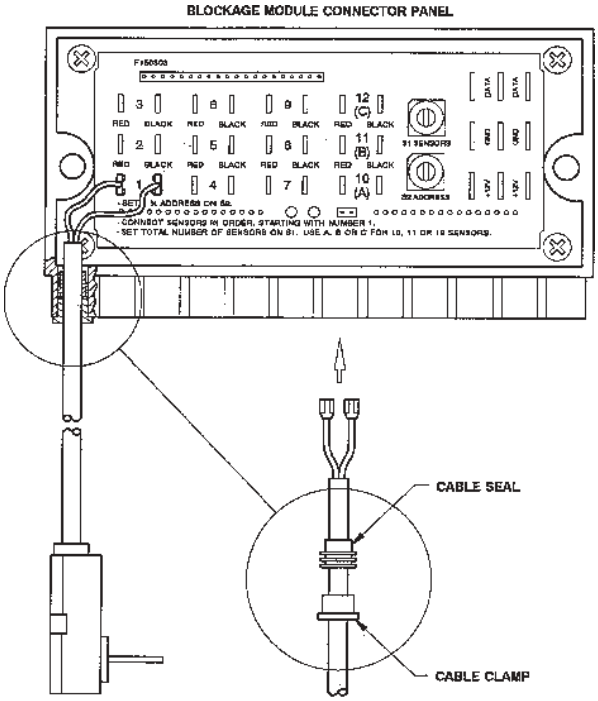

FIGURE 3: FLOW SENSOR ELECTRICAL CONNECTION

Pin Blockage System - continued

Wiring Procedure - Continued

- Connect the first module on the system to the Air Cart wiring harness using the cable with a connector on it. **White or Red wire is +12VDC, Green or Brown is Data, and Black is Ground.** See figure 4.
- Connect module 1 to module 2 and module 2 to module 3 etc. See figure 5.
- Set switch **S2 ADDRESS**, located on the front of the connector panel. In a system where there are 3 blockage modules, the addresses must be 1, 2, and 3. The modules should be numbered in such a way that it is easy for the operator to identify them by the address displayed on the monitor.
- After all the sensors have been connected and electrical connections have been made, the covers should be replaced on the housings.

S2 ADDRESS	
Switch Position	**Number of Modules**
1 - 9	1 - 9
A - F	10 - 15
0	16

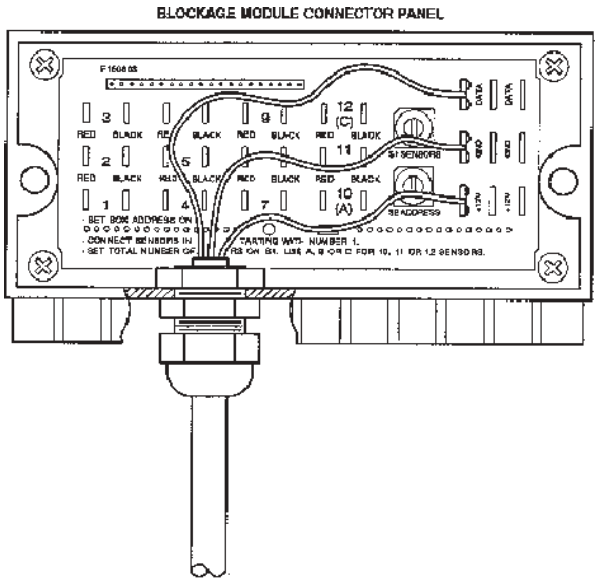

FIGURE 4: COMMUNICATION HARNESS ELECTRICAL CONNECTION

Pin Blockage System - continued

Wiring Procedure - Continued

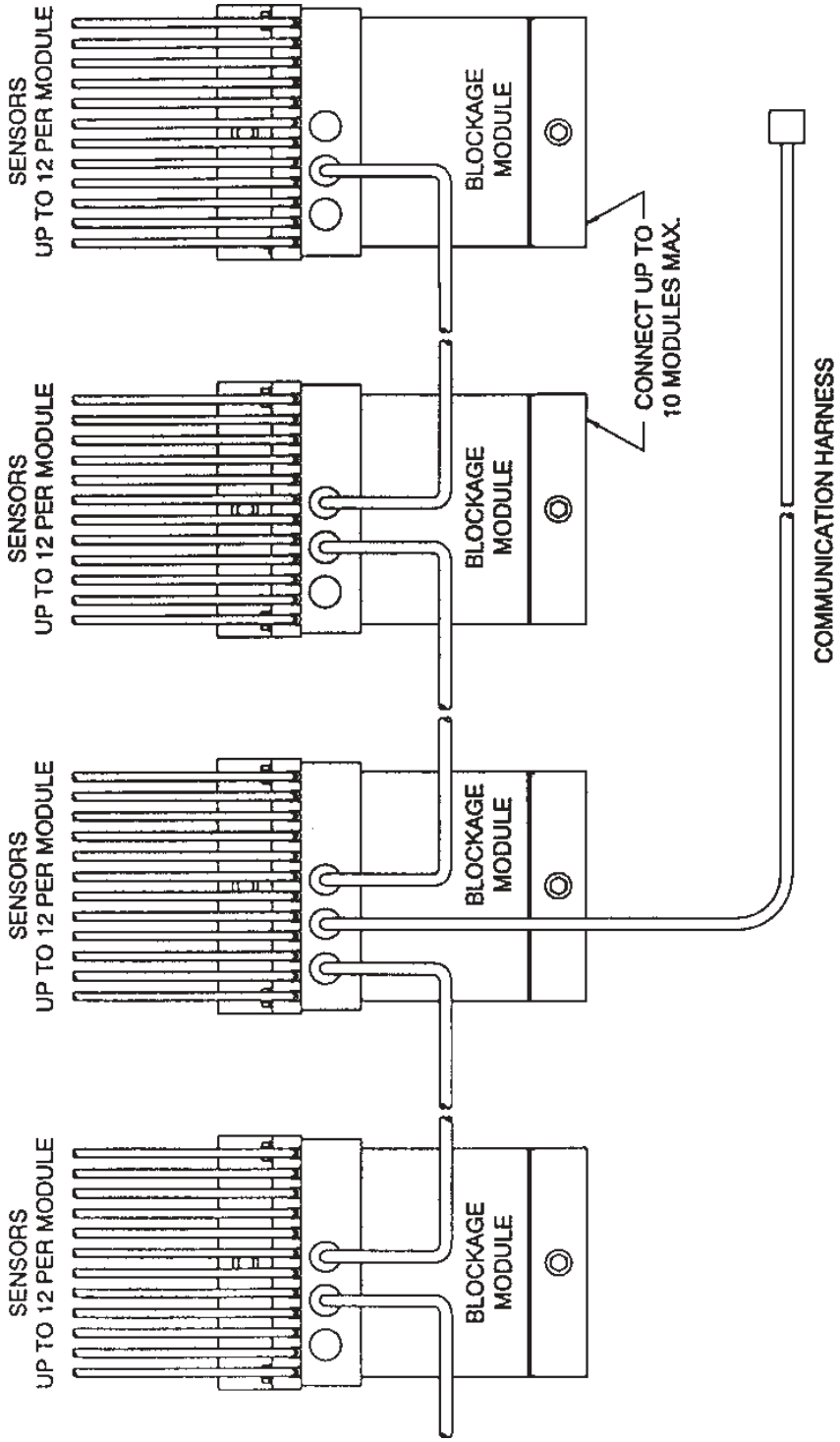

FIGURE 5: BLOCKAGE MODULE SYSTEM CONFIGURATION

Optical Blockage System

There are two options for mounting Blockage Modules and Optical Sensors.

Option 'A' - Full System

- **All** Secondary Hoses have a Optical Sensor.
- One Blockage Module #N37011 mounted for each Divider Head on Seeding Tool. (12 Modules Maximum)
- Main lead wire #N34795 (30 ft).
- 'Y' wire #N34791 for each additional module **as req'd.**
- Extension wire for each additional module **as req'd.** Extension wire lengths available are N34792 (5 ft), N34793 (10 ft), N34794 (20 ft), N34795 (30 ft).
- Optical Sensor Kits #N38652 as req'd.
- Optical Sensor extension cables as req'd. Optical extension cable lengths available are N37014 (5 ft), N37016 (10 ft), N37018 (20 ft), N37020 (30 ft).

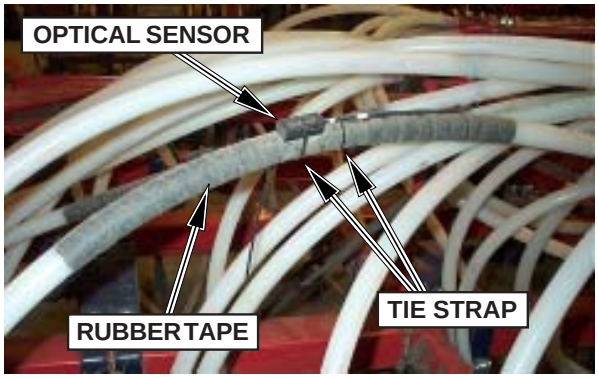

Optical Sensor Installation

Option 'B' - Partial System

- **Select** Secondary Hoses have a Optical Sensor.

  One Blockage Module #N37011 mounted for each set of 16 optical sensors. (12 Modules Maximum)
- Main lead wire #N34795 (30 ft).
- 'Y' cable #N34791 for each additional module **as req'd.**
- Extension wire for each additional module **as req'd.** Extension wire lengths available are N34792 (5 ft), N34793 (10 ft), N34794 (20 ft), N34795 (30 ft).
- Optical Sensor Kits #N38652 **- as req'd (See Charts).**
- Optical Sensor extension cables as req'd. Optical extension cable lengths available are N37014 (5 ft), N37016 (10 ft), N37018 (20 ft), N37020 (30 ft).

Optical Blockage System - continued

Option 'B' - One Sensor per Head - Secondary Hoses

One Optical Sensor Per Head - Secondary Hoses					
Machine	Sensor Extension Cables Required				Modules Req'd N37011
	5 foot N37014	10 foot N37016	20 foot N37018	30 foot N37020	
Maxim II Air Drill 3 frame models					
- 3 heads	0	1	0	2	1
- 4 heads	0	0	2	2	1
- 5 heads	0	1	2	2	1
- 6 heads	0	0	4	2	1
- 7 heads	0	1	2	4	1
- 8 heads	0	2	2	4	1
Maxim II Air Drill 5 frame models					
- 6 heads	0	0	2	6	1
- 7 heads	0	0	3	6	1
- 8 heads (49 ft)	0	0	4	6	1
- 8 heads (55 & 60ft)	0	0	4	6	1
- 9 heads (55 & 60ft)	0	0	5	6	1
Concept 2000 3 frame models					
- 3 heads	0	1	2	0	1
- 4 heads	0	2	2	0	1
- 5 heads (29 ft)	0	1	2	2	1
- 5 heads (32 & 38 ft)	0	1	2	2	1
- 6 heads	0	2	2	2	1
- 7 heads	0	2	3	2	1
Concept 2000 5 frame models					
- 5 heads	0	1	1	3	1
- 6 heads	0	2	0	4	1
- 7 heads	2	1	2	4	1
- 8 heads	0	2	2	4	1
- 9 heads	0	2	3	4	1

Optical Blockage System - continued

Option 'B' - Two Sensor per Head - Secondary Hoses

Two Optical Sensor Per Head - Secondary Hoses					
Machine	Sensor Extension Cables Required				Modules Req'd N37011
	5 foot N37014	10 foot N37016	20 foot N37018	30 foot N37020	
Maxim II Air Drill 3 frame models					
- 3 heads	0	2	0	4	1
- 4 heads	0	0	4	4	1
- 5 heads	0	2	4	4	1
- 6 heads	0	0	8	4	1
- 7 heads	0	2	4	8	1
- 8 heads	0	4	4	8	1
Maxim II Air Drill 5 frame models					
- 6 heads	0	0	4	12	1
- 7 heads	0	0	6	12	1
- 8 heads (49 ft)	0	0	8	12	1
- 8 heads (55 & 60ft)	0	0	8	12	1
- 9 heads (55 & 60ft)	0	0	10	12	2
Concept 2000 3 frame models					
- 3 heads	0	2	4	0	1
- 4 heads	0	4	4	0	1
- 5 heads (29 ft)	0	2	4	4	1
- 5 heads (32 & 38 ft)	0	2	4	4	1
- 6 heads	0	4	4	4	1
- 7 heads	0	4	6	4	1
Concept 2000 5 frame models					
- 5 heads	0	2	2	6	1
- 6 heads	0	4	0	8	1
- 7 heads	4	2	4	8	1
- 8 heads	0	4	4	8	1
- 9 heads	0	4	6	8	2

Optical Blockage System - continued

Option 'B' - Three Sensor per Head - Secondary Hoses

Three Optical Sensor Per Head - Secondary Hoses					
Machine	Sensor Extension Cables Required				Modules Req'd N37011
	5 foot N37014	10 foot N37016	20 foot N37018	30 foot N37020	
Maxim II Air Drill 3 frame models					
- 3 heads	0	3	0	6	1
- 4 heads	0	0	6	6	1
- 5 heads	0	6	6	6	1
- 6 heads	0	0	12	6	2
- 7 heads	0	3	6	12	2
- 8 heads	0	6	6	12	2
Maxim II Air Drill 5 frame models					
- 6 heads	0	0	6	18	2
- 7 heads	0	0	9	18	2
- 8 heads (49 ft)	0	0	12	18	2
- 8 heads (55 & 60ft)	0	0	12	18	2
- 9 heads (55 & 60ft)	0	0	15	18	2
Concept 2000 3 frame models					
- 3 heads	0	3	6	0	1
- 4 heads	0	6	6	0	1
- 5 heads (29 ft)	0	3	6	6	1
- 5 heads (32 & 38 ft)	0	3	6	6	1
- 6 heads	0	6	6	6	2
- 7 heads	0	6	9	6	2
Concept 2000 5 frame models					
- 5 heads	0	3	3	9	1
- 6 heads	0	6	0	12	2
- 7 heads	6	3	6	12	2
- 8 heads	0	6	6	12	2
- 9 heads	0	6	9	12	2

Optical Blockage System - continued

Option 'B' - Four Sensor per Head - Secondary Hoses

Four Optical Sensor Per Head - Secondary Hoses					
Machine	Sensor Extension Cables Required				Modules Req'd N37011
	5 foot N37014	10 foot N37016	20 foot N37018	30 foot N37020	
Maxim II Air Drill 3 frame models					
- 3 heads	0	4	0	8	1
- 4 heads	0	0	8	8	1
- 5 heads	0	4	8	8	2
- 6 heads	0	0	16	8	2
- 7 heads	0	4	8	16	2
- 8 heads	0	8	8	16	2
Maxim II Air Drill 5 frame models					
- 6 heads	0	0	8	24	2
- 7 heads	0	0	12	24	2
- 8 heads (49 ft)	0	0	16	24	2
- 8 heads (55 & 60ft)	0	0	16	24	2
- 9 heads (55 & 60ft)	0	0	20	24	3
Concept 2000 3 frame models					
- 3 heads	0	4	8	0	1
- 4 heads	0	8	8	0	1
- 5 heads (29 ft)	0	4	8	8	2
- 5 heads (32 & 38 ft)	0	4	8	8	2
- 6 heads	0	8	8	8	2
- 7 heads	0	8	12	8	2
Concept 2000 5 frame models					
- 5 heads	0	4	4	12	2
- 6 heads	0	8	0	16	2
- 7 heads	8	4	8	16	2
- 8 heads	0	8	8	16	2
- 9 heads	0	8	12	16	3

Optical Blockage System - continued

Installation Procedure

1. Module should be mounted horizontally as shown.
2. Module should be mounted on the Seeding Tool only.
3. The module must be grounded to Seeding Tool frame. Attach ground wire provided (or 10 GA wire as req'd) to the mounting plate of module and to Seeding Tool frame for a good ground.

Note: A good ground is essential. Remove paint from any ground contacts.

4. On a straight section of the secondary hose, wrap rubber tape for a length of 18 inches.
5. Drill a 9/16-inch diameter hole through one side of secondary hose at mid point of taped section.
6. Ensure hole is clean of debris.

Note: The sensors should be numbered and should be placed in an orderly fashion in the seed tubes, then connected sequentially to the blockage module (this will make it easier to identify blocked runs).

7. Secure the Optical Sensor and wire lead to hose with two tie straps.
8. Disconnect Blockage System wire harness from Air Cart wire harness when unhooking Air Cart from Seeding Tool.

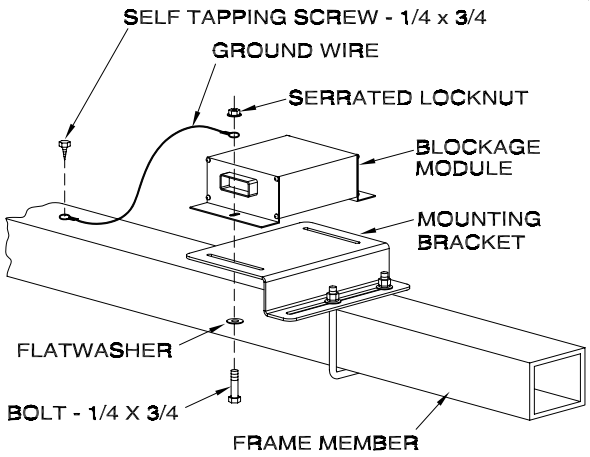

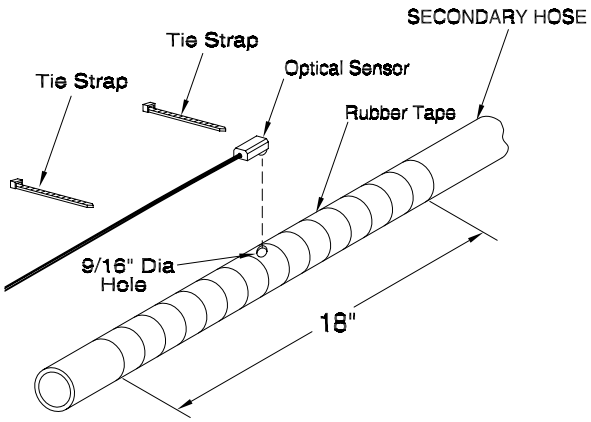

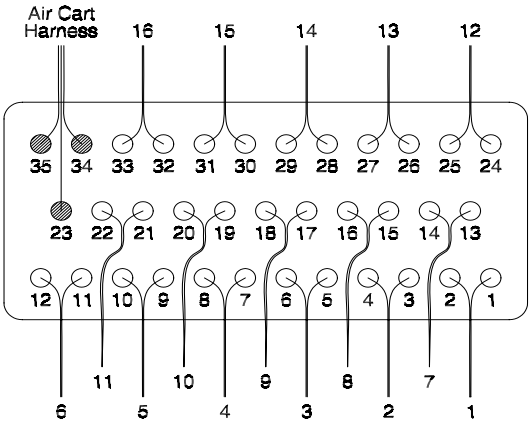

Sensor Arrangement

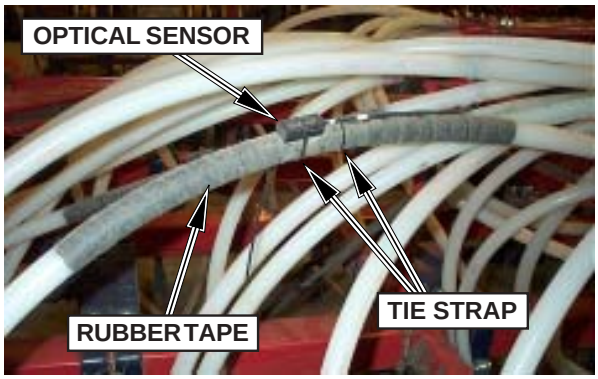

Optical Sensor Installation

Optical Blockage System - continued

Single Module

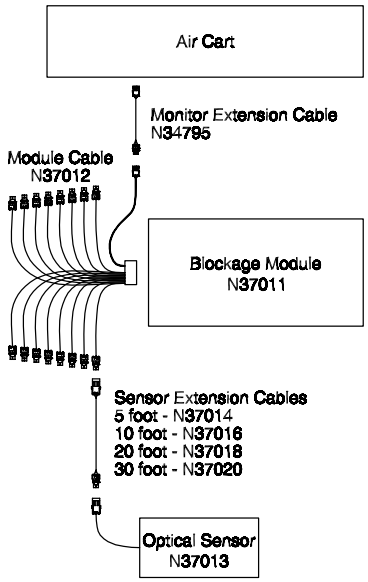

Two Modules

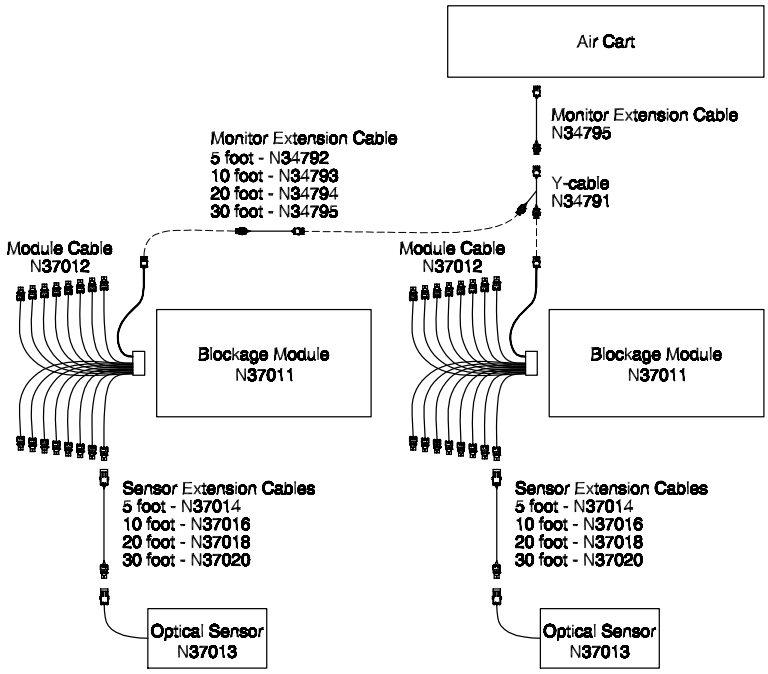

Multiple Modules

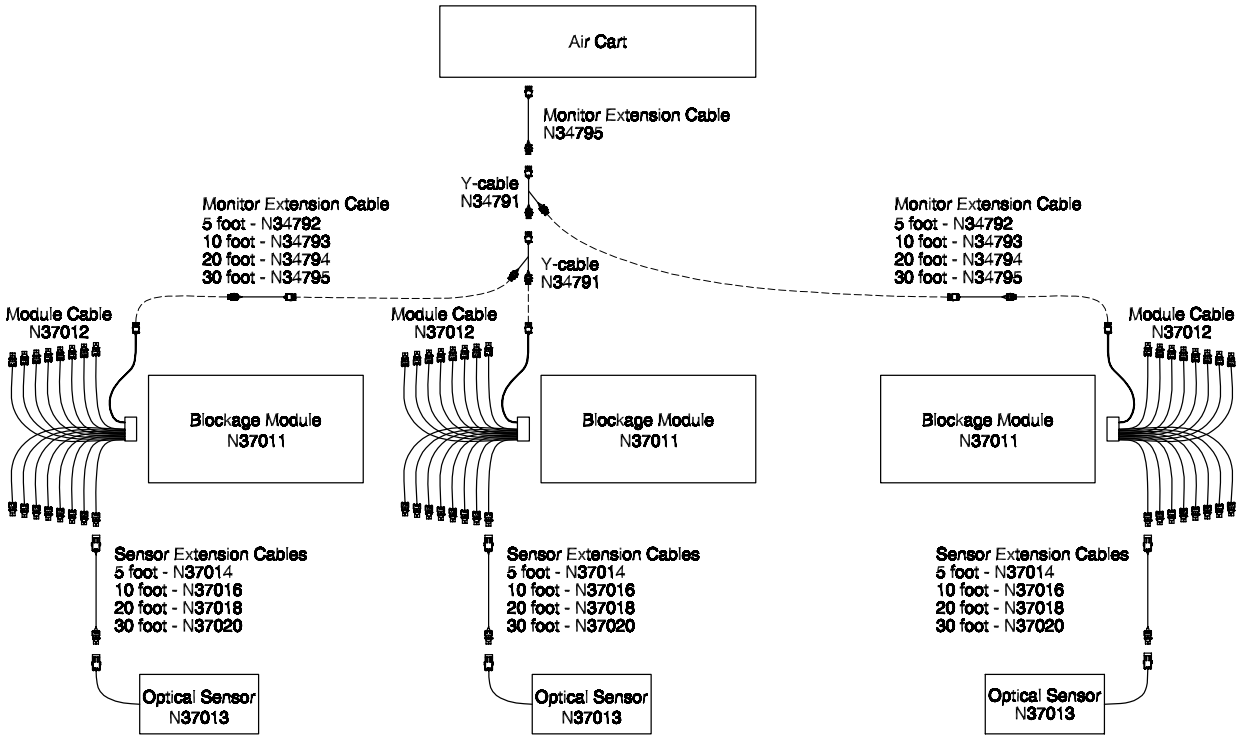

Notes

Section 11: Metric

Section Contents

Metric Rate Calibration Chart 11-2
Model 7130 & 7180 11-2
Model 7180, 7240, 7252 & 7300 11-3
Rate Charts 11-4
Seed Rate Chart: (Front Transmission) 11-4
Slow Speed Seed Rate Chart: (Front Transmission) 11-5
Fertilizer Rate Chart: (Rear Transmission) 11-6
Fertilizer Rate Chart: (Located on Front Tank of 7252 Only) 11-7

Metric Rate Calibration Chart

Calibration Chart based on 1/10 of a Hectare.

W = Machine Spread Width (metres)

F = Optional Mechanical Hectare Tally Factor = 56/R

R = Crank Rotation (turns)
for 1/10 Hectare = 397/W for 7130 with 16.5 x 16.1 All Weather Tires.
for 1/10 Hectare = 350/W for 7130 & 7180 with 21.5 x 16.1 All Weather Tires.
for 1/10 Hectare = 347/W for 7180 with 21.5 x 16.1 Sure Grip Tires.

D = Distance required for 1/10 Hectare (metres) = 1000/W

Model 7130 & 7180

7000 Series Air Seeder
METRIC RATE CALIBRATION CHART

WIDTH [W]		AIRSEEDER MODEL						DISTANCE [D]	WIDTH [W]		AIRSEEDER MODEL						DISTANCE [D]
		7130		7180							7130		7180				
		Tire 16.5 x 16.1		Tire 21.5 x 16.1		Sure Grip Tire 21.5 x 16.1					Tire 16.5 x 16.1		Tire 21.5 x 16.1		Sure Grip Tire 21.5 x 16.1		
(ft)	(m)	[R]	[F]	[R]	[F]	[R]	[F]	(m)	(ft)	(m)	[R]	[F]	[R]	[F]	[R]	[F]	(m)
21	6.40	62.03	0.90	54.68	1.02	54.22	1.03	156.25	51	15.54	25.55	2.19	22.52	2.49	22.33	2.51	64.35
22	6.71	59.16	0.95	52.15	1.07	51.72	1.08	149.03	52	15.85	25.05	2.24	22.08	2.54	21.89	2.56	63.09
23	7.01	56.63	0.99	49.92	1.12	49.50	1.13	142.65	53	16.15	24.58	2.28	21.67	2.58	21.49	2.61	61.92
24	7.32	54.23	1.03	47.81	1.17	47.41	1.18	136.61	54	16.46	24.12	2.32	21.26	2.63	21.08	2.66	60.75
25	7.62	52.10	1.07	45.93	1.22	45.54	1.23	131.23	55	16.76	23.69	2.36	20.88	2.68	20.71	2.70	59.67
26	7.92	50.12	1.12	44.19	1.27	43.82	1.28	126.26	56	17.07	23.26	2.41	20.50	2.73	20.33	2.75	58.58
27	8.23	48.24	1.16	42.52	1.32	42.17	1.33	121.51	57	17.37	22.85	2.45	20.15	2.78	19.98	2.80	57.57
28	8.53	46.54	1.20	41.03	1.36	40.68	1.38	117.23	58	17.68	22.45	2.49	19.79	2.83	19.63	2.85	56.56
29	8.84	44.91	1.25	39.59	1.41	39.26	1.43	113.12	59	17.98	22.08	2.54	19.46	2.88	19.30	2.90	55.62
30	9.14	43.43	1.29	38.29	1.46	37.97	1.47	109.41	60	18.29	21.70	2.58	19.13	2.93	18.97	2.95	54.67
31	9.45	42.01	1.33	37.03	1.51	36.72	1.53	105.82	61	18.59	21.35	2.62	18.82	2.98	18.67	3.00	53.79
32	9.75	40.72	1.38	35.89	1.56	35.59	1.57	102.56	62	18.90	21.00	2.67	18.52	3.02	18.36	3.05	52.91
33	10.06	39.46	1.42	34.79	1.61	34.50	1.62	99.40	63	19.20	20.68	2.71	18.23	3.07	18.07	3.10	52.08
34	10.36	38.32	1.46	33.78	1.66	33.50	1.67	96.53	64	19.51	20.35	2.75	17.94	3.12	17.79	3.15	51.26
35	10.67	37.20	1.51	32.80	1.71	32.52	1.72	93.72	65	19.81	20.04	2.79	17.67	3.17	17.52	3.20	50.48
36	10.97	36.19	1.55	31.90	1.76	31.63	1.77	91.16	66	20.12	19.73	2.84	17.39	3.22	17.25	3.25	49.70
37	11.28	35.19	1.59	31.02	1.81	30.76	1.82	88.65	67	20.42	19.44	2.88	17.14	3.27	16.99	3.30	48.97
38	11.58	34.28	1.63	30.22	1.85	29.97	1.87	86.36	68	20.73	19.15	2.92	16.88	3.32	16.74	3.35	48.24
39	11.89	33.39	1.68	29.43	1.90	29.19	1.92	84.10	69	21.03	18.88	2.97	16.64	3.37	16.50	3.39	47.55
40	12.19	32.57	1.72	28.71	1.95	28.47	1.97	82.03	70	21.34	18.60	3.01	16.40	3.41	16.26	3.44	46.86
41	12.50	31.76	1.76	28.00	2.00	27.76	2.02	80.00	71	21.64	18.34	3.05	16.17	3.46	16.04	3.49	46.21
42	12.80	31.01	1.81	27.34	2.05	27.11	2.07	78.13	72	21.95	18.09	3.10	15.94	3.51	15.81	3.54	45.56
43	13.11	30.28	1.85	26.69	2.10	26.47	2.12	76.28	73	22.25	17.84	3.14	15.73	3.56	15.60	3.59	44.94
44	13.41	29.60	1.89	26.10	2.15	25.88	2.16	74.57	74	22.56	17.60	3.18	15.51	3.61	15.38	3.64	44.33
45	13.72	28.93	1.94	25.51	2.20	25.29	2.21	72.89	75	22.86	17.37	3.22	15.31	3.66	15.18	3.69	43.74
46	14.02	28.31	1.98	24.96	2.24	24.75	2.26	71.33	76	23.16	17.14	3.27	15.11	3.71	14.98	3.74	43.18
47	14.33	27.70	2.02	24.42	2.29	24.22	2.31	69.78	77	23.47	16.91	3.31	14.91	3.76	14.79	3.79	42.61
48	14.63	27.13	2.06	23.92	2.34	23.72	2.36	68.35	78	23.77	16.70	3.35	14.72	3.80	14.60	3.84	42.07
49	14.94	26.57	2.11	23.42	2.39	23.23	2.41	66.93	79	24.08	16.49	3.40	14.53	3.85	14.41	3.89	41.53
50	15.24	26.05	2.15	22.96	2.44	22.77	2.46	65.62	80	24.38	16.28	3.44	14.35	3.90	14.23	3.94	41.02

Metric Rate Calibration Chart

Calibration Chart based on 1/10 of a Hectare.

W = Machine Spread Width (metres)

F = Optional Mechanical Hectare Tally Factor = 56/R

R = Crank Rotation (turns)
for 1/10 Hectare = 277.9/W for 7180 with 18.4 x 26 All Weather Tires.
for 1/10 Hectare = 262.4/W for 7240, 7252 & 7300 with 23.1 x 26 All Weather Tires.
for 1/10 Hectare = 238.6/W for 7240, 7252 & 7300 with 23.1 x 26 Rice Tires.

D = Distance required for 1/10 Hectare (metres) = 1000/W

Model 7180, 7240, 7252 & 7300

7000 Series Air Seeder
METRIC RATE CALIBRATION CHART

WIDTH [W]		AIRSEEDER MODEL						DISTANCE [D]	WIDTH [W]		AIRSEEDER MODEL						DISTANCE [D]
		7180		7240/7252/7300							7180		7240/7252/7300				
		Tire 18.4 x 26		Tire 23.1 x 26		Rice Tire 23.1 x 26					Tire 18.4 x 26		Tire 23.1 x 26		Rice Tire 23.1 x 26		
(ft)	(m)	[R]	[F]	[R]	[F]	[R]	[F]	(m)	(ft)	(m)	[R]	[F]	[R]	[F]	[R]	[F]	(m)
21	6.40	43.42	1.29	41.00	1.37	37.28	1.50	156.25	51	15.54	17.88	3.13	16.89	3.32	15.35	3.65	64.35
22	6.71	41.41	1.35	39.11	1.43	35.56	1.57	149.03	52	15.85	17.53	3.19	16.56	3.38	15.05	3.72	63.09
23	7.01	39.64	1.41	37.44	1.50	34.03	1.65	142.65	53	16.15	17.20	3.26	16.25	3.45	14.77	3.79	61.92
24	7.32	37.96	1.48	35.85	1.56	32.59	1.72	136.61	54	16.46	16.88	3.32	15.94	3.51	14.49	3.86	60.75
25	7.62	36.46	1.54	34.44	1.63	31.31	1.79	131.23	55	16.76	16.58	3.38	15.66	3.58	14.23	3.94	59.67
26	7.92	35.08	1.60	33.13	1.69	30.12	1.86	126.26	56	17.07	16.28	3.44	15.37	3.64	13.98	4.01	58.58
27	8.23	33.76	1.66	31.89	1.76	28.99	1.93	121.51	57	17.37	16.00	3.50	15.11	3.71	13.73	4.08	57.57
28	8.53	32.57	1.72	30.76	1.82	27.97	2.00	117.23	58	17.68	15.72	3.56	14.84	3.77	13.49	4.15	56.56
29	8.84	31.43	1.78	29.69	1.89	26.99	2.07	113.12	59	17.98	15.45	3.62	14.60	3.84	13.27	4.22	55.62
30	9.14	30.40	1.84	28.71	1.95	26.10	2.15	109.41	60	18.29	15.19	3.69	14.35	3.90	13.04	4.29	54.67
31	9.45	29.40	1.90	27.77	2.02	25.25	2.22	105.82	61	18.59	14.95	3.75	14.12	3.97	12.83	4.36	53.79
32	9.75	28.50	1.96	26.92	2.08	24.47	2.29	102.56	62	18.90	14.70	3.81	13.88	4.03	12.62	4.44	52.91
33	10.06	27.62	2.03	26.09	2.15	23.72	2.36	99.40	63	19.20	14.47	3.87	13.67	4.10	12.43	4.51	52.08
34	10.36	26.82	2.09	25.33	2.21	23.03	2.43	96.53	64	19.51	14.24	3.93	13.45	4.16	12.23	4.58	51.26
35	10.67	26.04	2.15	24.59	2.28	22.36	2.50	93.72	65	19.81	14.03	3.99	13.25	4.23	12.04	4.65	50.48
36	10.97	25.33	2.21	23.92	2.34	21.75	2.57	91.16	66	20.12	13.81	4.06	13.04	4.29	11.86	4.72	49.70
37	11.28	24.63	2.27	23.26	2.41	21.15	2.65	88.65	67	20.42	13.61	4.11	12.85	4.36	11.68	4.79	48.97
38	11.58	23.99	2.33	22.66	2.47	20.60	2.72	86.36	68	20.73	13.40	4.18	12.66	4.42	11.51	4.87	48.24
39	11.89	23.37	2.40	22.07	2.54	20.07	2.79	84.10	69	21.03	13.21	4.24	12.48	4.49	11.34	4.94	47.55
40	12.19	22.79	2.46	21.53	2.60	19.57	2.86	82.03	70	21.34	13.02	4.30	12.30	4.55	11.18	5.01	46.86
41	12.50	22.23	2.52	20.99	2.67	19.09	2.93	80.00	71	21.64	12.84	4.36	12.13	4.62	11.02	5.08	46.21
42	12.80	21.71	2.58	20.50	2.73	18.64	3.00	78.13	72	21.95	12.66	4.42	11.96	4.68	10.87	5.15	45.56
43	13.11	21.19	2.64	20.02	2.80	18.20	3.08	76.28	73	22.25	12.49	4.48	11.79	4.75	10.72	5.22	44.94
44	13.41	20.72	2.70	19.57	2.86	17.79	3.15	74.57	74	22.56	12.32	4.55	11.63	4.82	10.58	5.29	44.33
45	13.72	20.25	2.77	19.13	2.93	17.39	3.22	72.89	75	22.86	12.15	4.61	11.48	4.88	10.44	5.36	43.74
46	14.02	19.82	2.83	18.72	2.99	17.02	3.29	71.33	76	23.16	12.00	4.67	11.33	4.94	10.30	5.44	43.18
47	14.33	19.39	2.89	18.31	3.06	16.65	3.36	69.78	77	23.47	11.84	4.73	11.18	5.01	10.17	5.51	42.61
48	14.63	18.99	2.95	17.94	3.12	16.31	3.43	68.35	78	23.77	11.69	4.79	11.04	5.07	10.04	5.58	42.07
49	14.94	18.60	3.01	17.57	3.19	15.97	3.51	66.93	79	24.08	11.54	4.85	10.90	5.14	9.91	5.65	41.53
50	15.24	18.23	3.07	17.22	3.25	15.65	3.58	65.62	80	24.38	11.40	4.91	10.76	5.20	9.79	5.72	41.02

Rate Charts

Seed Rate Chart: (Front Transmission)

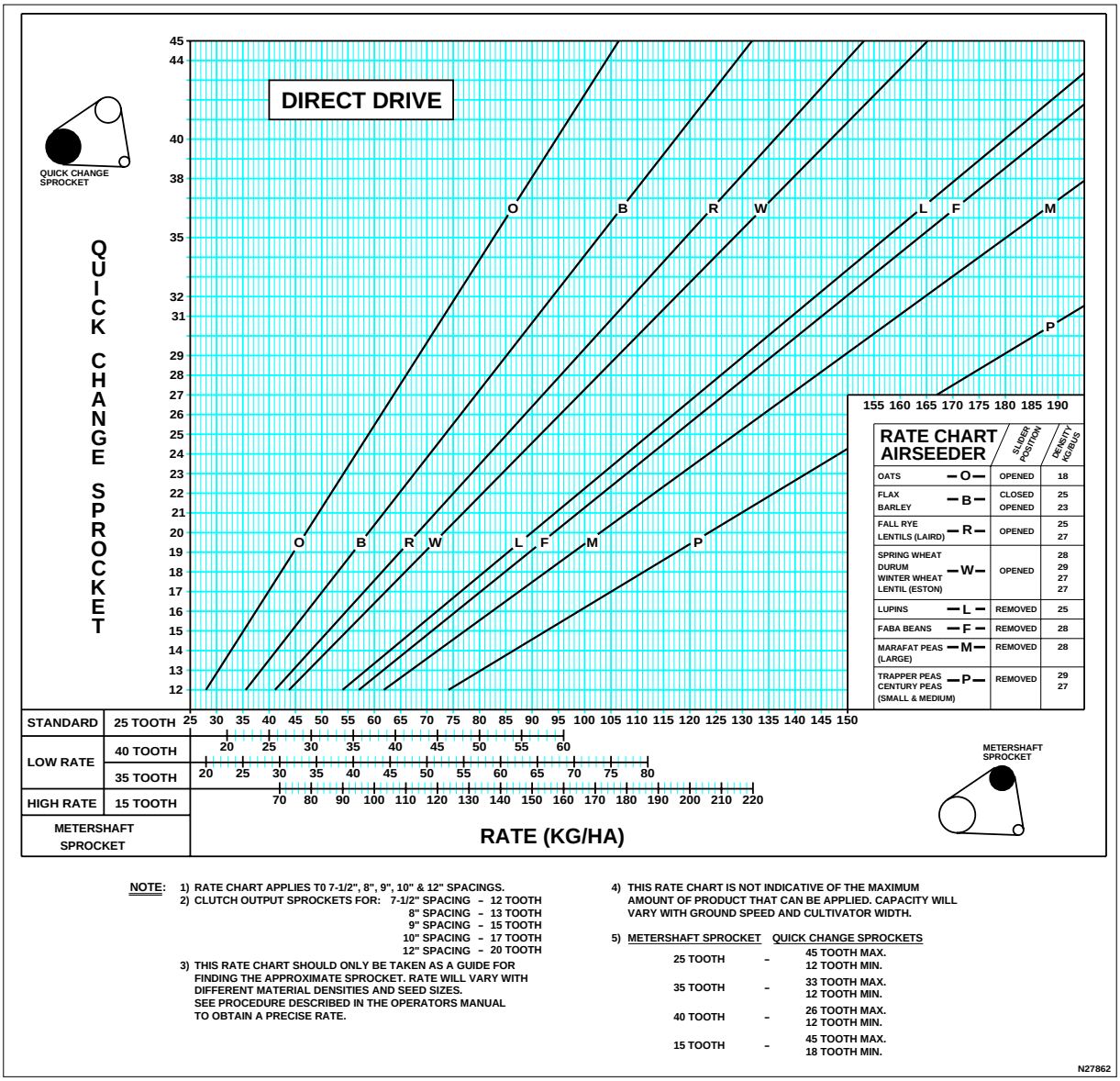

NOTE:
1) RATE CHART APPLIES T0 7-1/2", 8", 9", 10" & 12" SPACINGS.
2) CLUTCH OUTPUT SPROCKETS FOR:
7-1/2" SPACING – 12 TOOTH
8" SPACING – 13 TOOTH
9" SPACING – 15 TOOTH
10" SPACING – 17 TOOTH
12" SPACING – 20 TOOTH
3) THIS RATE CHART SHOULD ONLY BE TAKEN AS A GUIDE FOR FINDING THE APPROXIMATE SPROCKET. RATE WILL VARY WITH DIFFERENT MATERIAL DENSITIES AND SEED SIZES. SEE PROCEDURE DESCRIBED IN THE OPERATORS MANUAL TO OBTAIN A PRECISE RATE.
4) THIS RATE CHART IS NOT INDICATIVE OF THE MAXIMUM AMOUNT OF PRODUCT THAT CAN BE APPLIED. CAPACITY WILL VARY WITH GROUND SPEED AND CULTIVATOR WIDTH.
5)

METERSHAFT SPROCKET		QUICK CHANGE SPROCKETS
25 TOOTH	–	45 TOOTH MAX. 12 TOOTH MIN.
35 TOOTH	–	33 TOOTH MAX. 12 TOOTH MIN.
40 TOOTH	–	26 TOOTH MAX. 12 TOOTH MIN.
15 TOOTH	–	45 TOOTH MAX. 18 TOOTH MIN.

Rate Charts

Slow Speed Seed Rate Chart: (Front Transmission)

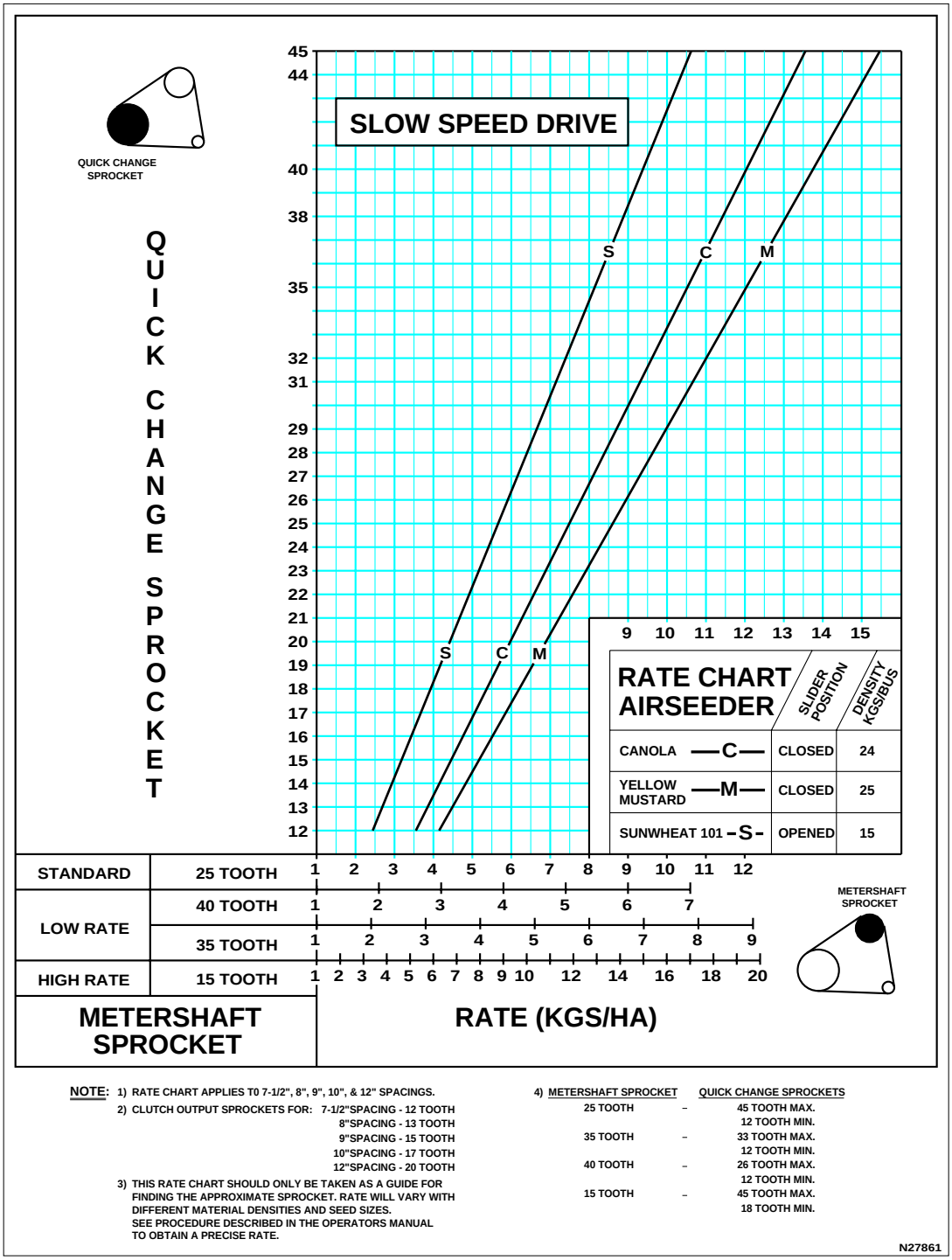

NOTE:
1) RATE CHART APPLIES T0 7-1/2", 8", 9", 10", & 12" SPACINGS.
2) CLUTCH OUTPUT SPROCKETS FOR: 7-1/2"SPACING - 12 TOOTH
8"SPACING - 13 TOOTH
9"SPACING - 15 TOOTH
10"SPACING - 17 TOOTH
12"SPACING - 20 TOOTH
3) THIS RATE CHART SHOULD ONLY BE TAKEN AS A GUIDE FOR FINDING THE APPROXIMATE SPROCKET. RATE WILL VARY WITH DIFFERENT MATERIAL DENSITIES AND SEED SIZES. SEE PROCEDURE DESCRIBED IN THE OPERATORS MANUAL TO OBTAIN A PRECISE RATE.
4)

METERSHAFT SPROCKET		QUICK CHANGE SPROCKETS
25 TOOTH	–	45 TOOTH MAX. 12 TOOTH MIN.
35 TOOTH	–	33 TOOTH MAX. 12 TOOTH MIN.
40 TOOTH	–	26 TOOTH MAX. 12 TOOTH MIN.
15 TOOTH	–	45 TOOTH MAX. 18 TOOTH MIN.

N27861

Rate Charts - continued

Fertilizer Rate Chart: (Rear Transmission)

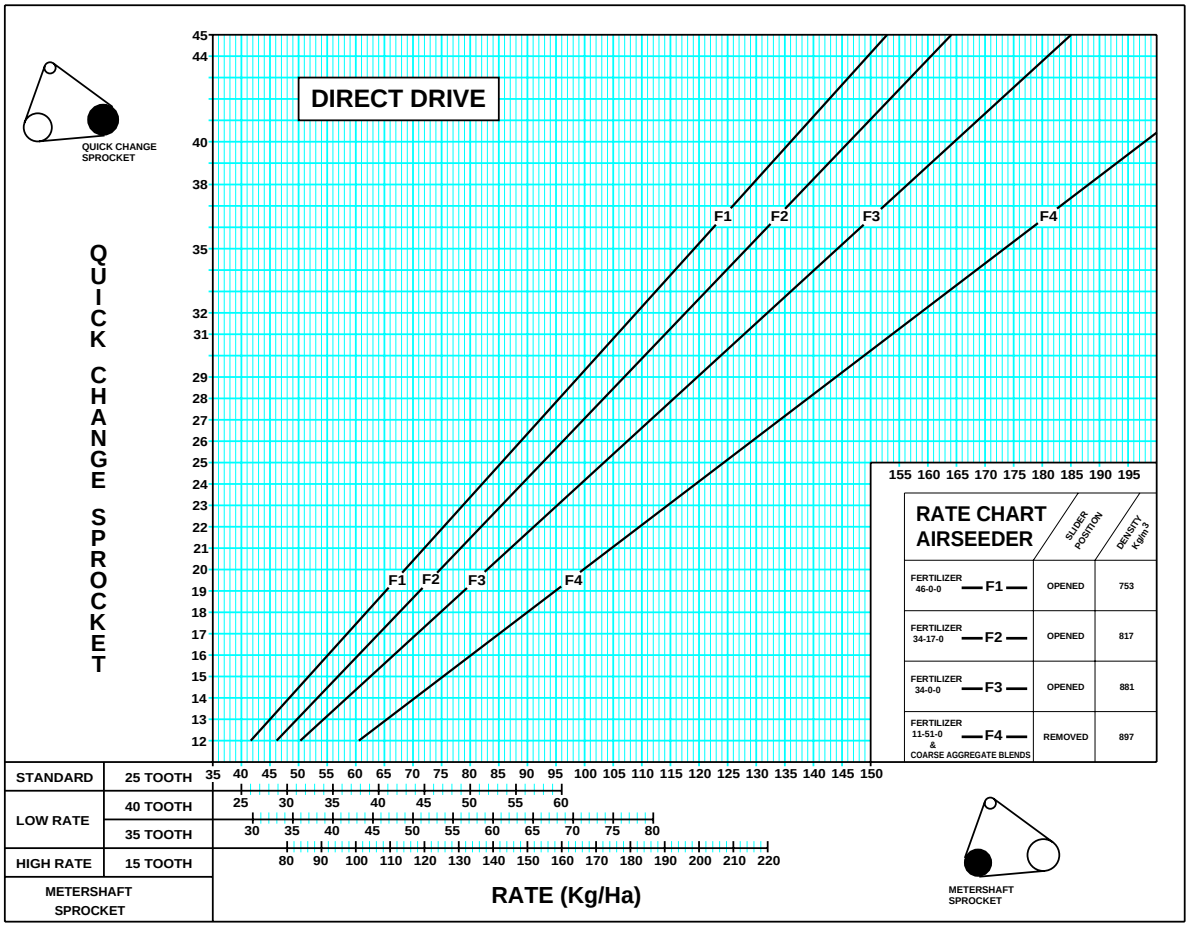

NOTE:

1) RATE CHART APPLIES T0 7-1/2", 8", 9", 10" & 12" SPACINGS.
2) CLUTCH OUTPUT SPROCKETS FOR: 7-1/2" SPACING – 12 TOOTH
   8" SPACING – 13 TOOTH
   9" SPACING – 15 TOOTH
   10" SPACING – 17 TOOTH
   12" SPACING – 20 TOOTH
3) THIS RATE CHART SHOULD ONLY BE TAKEN AS A GUIDE FOR FINDING THE APPROXIMATE SPROCKET. RATE WILL VARY WITH DIFFERENT MATERIAL DENSITIES AND SEED SIZES. SEE PROCEDURE DESCRIBED IN THE OPERATORS MANUAL TO OBTAIN A PRECISE RATE.
4) THIS RATE CHART IS NOT INDICATIVE OF THE MAXIMUM AMOUNT OF PRODUCT THAT CAN BE APPLIED. CAPACITY WILL VARY WITH GROUND SPEED AND CULTIVATOR WIDTH.
5)

METERSHAFT SPROCKET		QUICK CHANGE SPROCKETS
25 TOOTH	–	45 TOOTH MAX. 12 TOOTH MIN.
35 TOOTH	–	33 TOOTH MAX. 12 TOOTH MIN.
40 TOOTH	–	26 TOOTH MAX. 12 TOOTH MIN.
15 TOOTH	–	45 TOOTH MAX. 18 TOOTH MIN.

N27863

Rate Charts - continued

Fertilizer Rate Chart: (Located on Front Tank of 7252 Only)

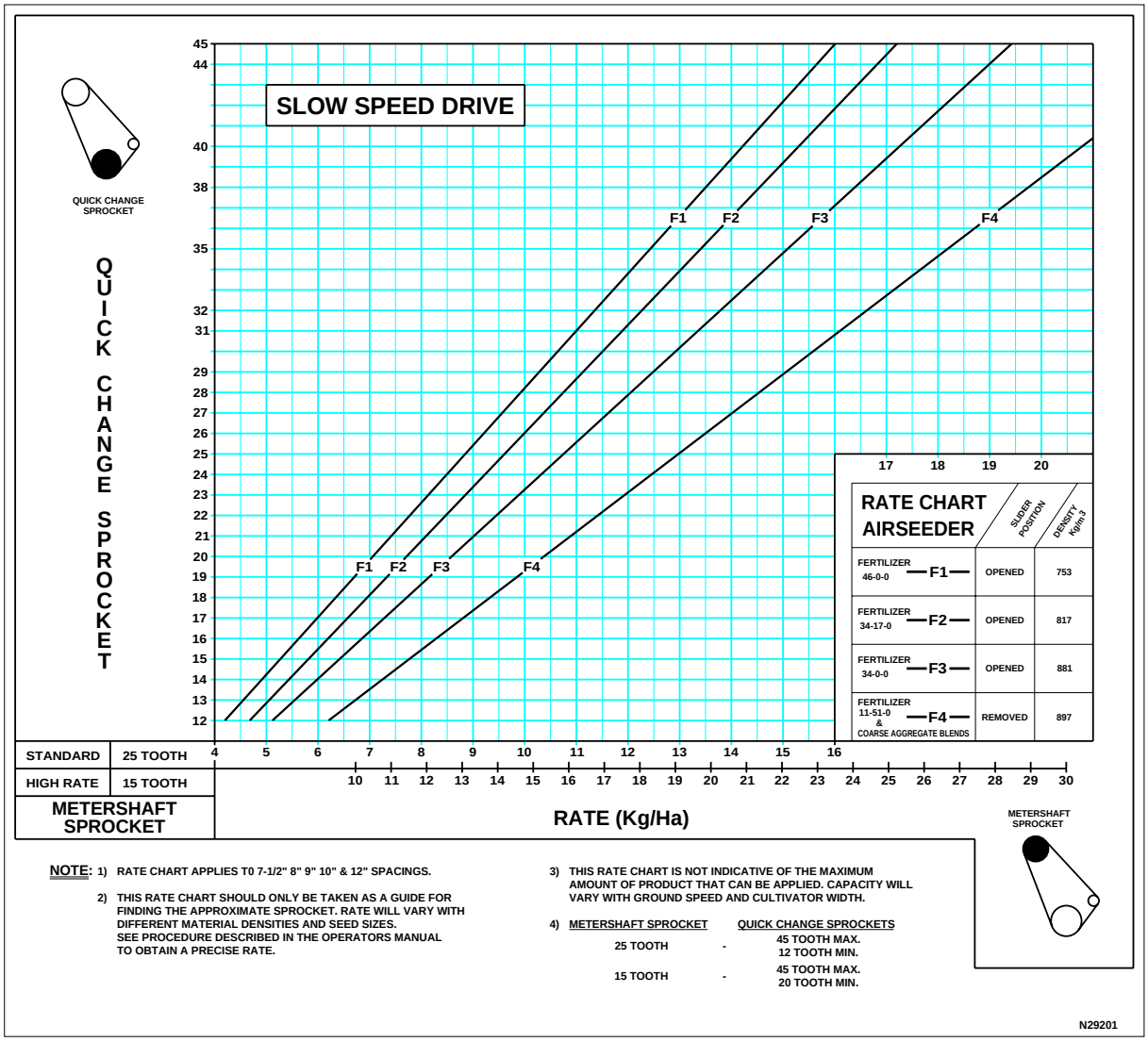

NOTE: 1) RATE CHART APPLIES T0 7-1/2" 8" 9" 10" & 12" SPACINGS.

2) THIS RATE CHART SHOULD ONLY BE TAKEN AS A GUIDE FOR FINDING THE APPROXIMATE SPROCKET. RATE WILL VARY WITH DIFFERENT MATERIAL DENSITIES AND SEED SIZES. SEE PROCEDURE DESCRIBED IN THE OPERATORS MANUAL TO OBTAIN A PRECISE RATE.

3) THIS RATE CHART IS NOT INDICATIVE OF THE MAXIMUM AMOUNT OF PRODUCT THAT CAN BE APPLIED. CAPACITY WILL VARY WITH GROUND SPEED AND CULTIVATOR WIDTH.

4)

METERSHAFT SPROCKET		QUICK CHANGE SPROCKETS
25 TOOTH	-	45 TOOTH MAX. 12 TOOTH MIN.
15 TOOTH	-	45 TOOTH MAX. 20 TOOTH MIN.

Notes

Section 12:
Fertilizer Banding Kit

Section Contents

Fertilizer Banding Kit 12-2
Using Rear Transmission 12-2
Using Front Transmission 12-2
Metric Rate Charts 12-3
Slow Speed: (Front Transmission) Small Seeds 12-3
Slow Speed: (Front Transmission) Regular Seeds 12-4
Slow Speed: (Front Transmission) Fertilizer 12-5
Imperial Rate Charts 12-6
Slow Speed: (Front Transmission) Small Seeds 12-6
Slow Speed: (Front Transmission) Regular Seeds 12-7
Slow Speed: (Front Transmission) Fertilizer 12-8

Fertilizer Banding Kit

The fertilizer banding kit joins the two transmissions together, so only the front or rear transmission needs to be set for different rates.

The product is then metered at a 40:60 split in the rate. The **front tank meters 40%** of the desired rate and the **rear tank meters 60%** of the desired rate.

To determine the rate sprocket and calibration of Air Cart use the following procedure:

Using Rear Transmission

The amount collected from the rear tank is ***60%*** the ***total*** amount being metered into the air stream.

- Multiply the desired rate **(DR)** by 60% to determine the rate being metered from the rear tank **(RR)**. **DR x .6 = RR**
- Use the rear tank rate **(RR)** to determine the rate change sprocket to use. See *Rate Charts* Section
- Remove the chain joining the two transmissions before taking rate calibration samples from **rear tank *only***. See *Rate Calibration* Section.

This will prevent material from being deposited into the front collector body that is not being checked and avoid a possible plugging of the hoses.

- The sample taken from the tank should be 60% of the desired rate as determined above **(RR)**.

Using Front Transmission

The amount collected from the front tank is ***40%*** the ***total*** amount being metered into the air stream.

- Multiply the desired rate **(DR)** by 40% to determine the rate being metered from the front tank **(RF)**. **DR x .4 = RF**
- Use the front tank rate **(RF)** to determine the rate change sprocket to use. See *Rate Charts* Section
- Remove the chain joining the two transmissions before taking rate calibration samples from **front tank *only.*** See *Rate Calibration* Section.

This will prevent material from being deposited into the rear collector body that is not being checked and avoid a possible plugging of the hoses.

- The sample taken from the tank should be 40% of the desired rate as determined above **(RF)**.

Important

Remove the meter drive chain from the transmission not in use. Severe damage to drive components will result otherwise.

Note: Supplied in section "*Fertilizer Banding Kit*" (at rear of book) are rate charts which are based on the 60/40 split for easy rate sprocket selection.

Rear Transmission

Example:

For a **desired rate (DR)** of 100 lbs. per acre:

Determine **Rear Tank Rate (RR)**

DR x .6 = RR

100 lbs/acre x .6 = 60 lbs/acre

100 kg/ha x .6 = 60 kg/ha

Determine sprocket size required to apply 60 lbs/acre from Rate Chart on Air Cart.

Front Transmission

Example:

For a **desired rate (DR)** of 100 lbs. per acre:

Determine **Front Tank Rate (RF)**

DR x .4 = RF

100 lbs/acre x .4 = 40 lbs/acre

100 kg/ha x .4 = 40 kg/ha

Determine sprocket size required to apply 40 lbs/acre from Rate Chart on Air Cart.

Metric Rate Charts

Slow Speed: (Front Transmission) Small Seeds

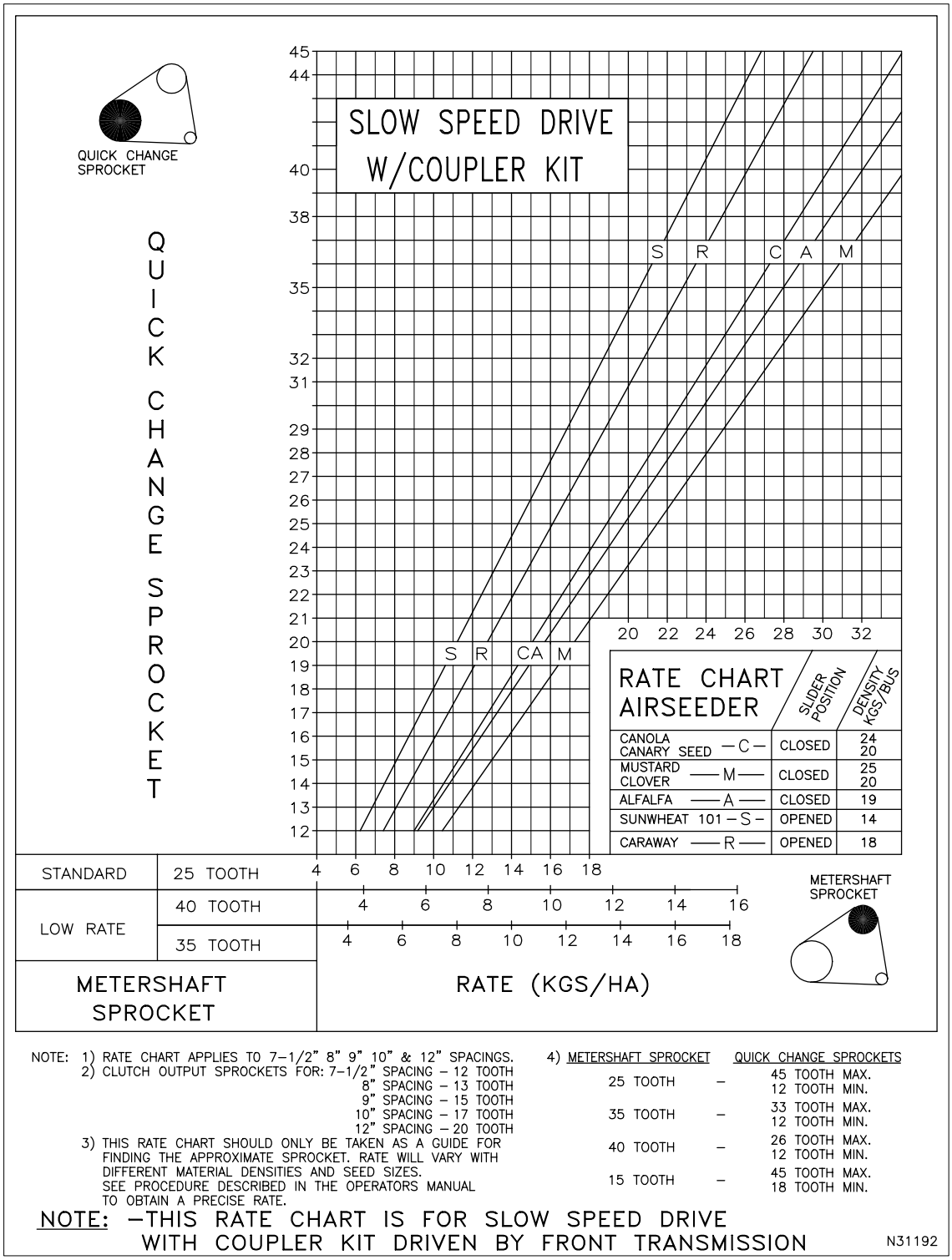

NOTE: 1) RATE CHART APPLIES TO 7–1/2" 8" 9" 10" & 12" SPACINGS.
2) CLUTCH OUTPUT SPROCKETS FOR: 7–1/2" SPACING – 12 TOOTH
8" SPACING – 13 TOOTH
9" SPACING – 15 TOOTH
10" SPACING – 17 TOOTH
12" SPACING – 20 TOOTH
3) THIS RATE CHART SHOULD ONLY BE TAKEN AS A GUIDE FOR FINDING THE APPROXIMATE SPROCKET. RATE WILL VARY WITH DIFFERENT MATERIAL DENSITIES AND SEED SIZES. SEE PROCEDURE DESCRIBED IN THE OPERATORS MANUAL TO OBTAIN A PRECISE RATE.

4)

METERSHAFT SPROCKET		QUICK CHANGE SPROCKETS
25 TOOTH	–	45 TOOTH MAX. 12 TOOTH MIN.
35 TOOTH	–	33 TOOTH MAX. 12 TOOTH MIN.
40 TOOTH	–	26 TOOTH MAX. 12 TOOTH MIN.
15 TOOTH	–	45 TOOTH MAX. 18 TOOTH MIN.

NOTE: –THIS RATE CHART IS FOR SLOW SPEED DRIVE WITH COUPLER KIT DRIVEN BY FRONT TRANSMISSION

N31192

Metric Rate Charts - continued

Slow Speed: (Front Transmission) Regular Seeds

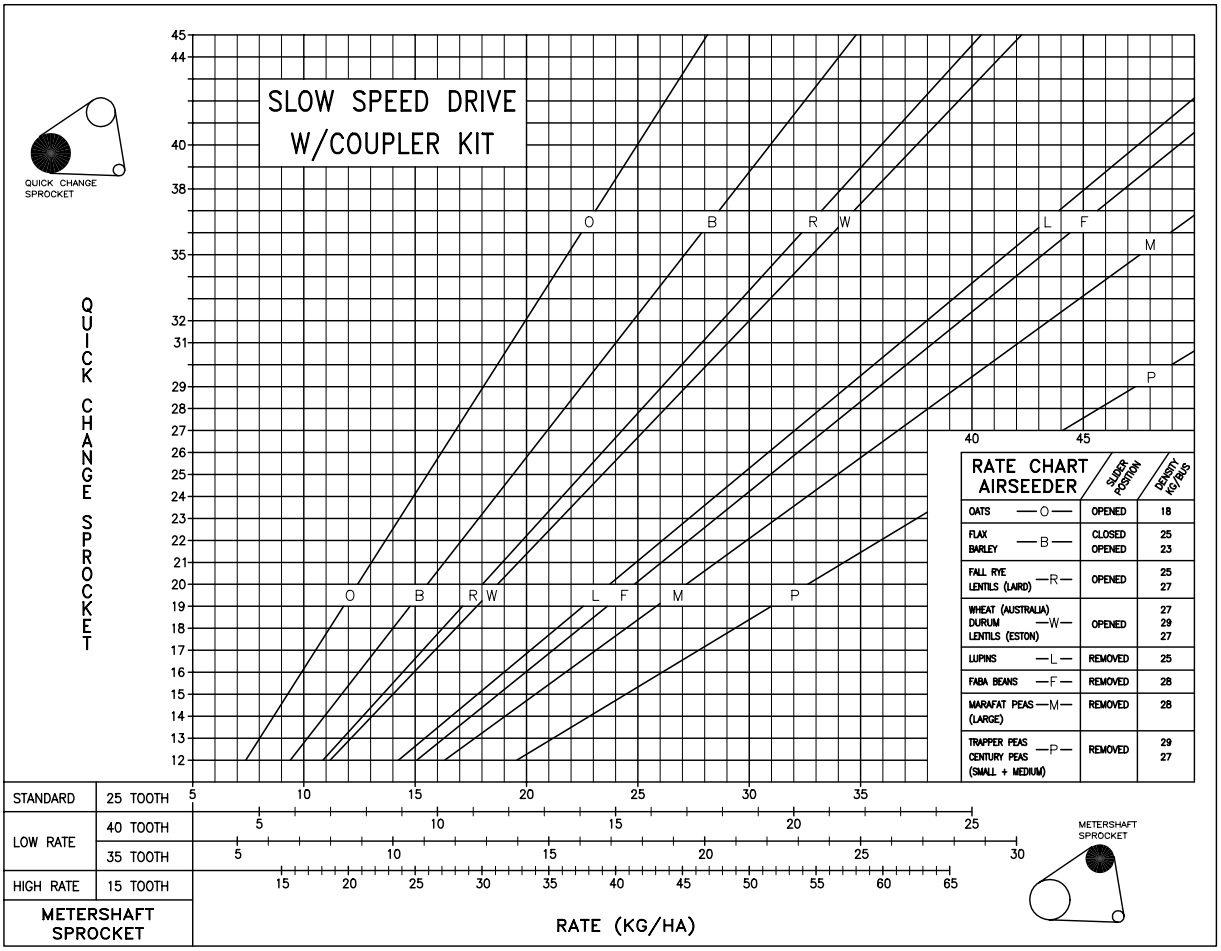

RATE CHART AIRSEEDER		SLIDER POSITION	DENSITY Kg/BUS
OATS	—O—	OPENED	18
FLAX BARLEY	—B—	CLOSED OPENED	25 23
FALL RYE LENTILS (LAIRD)	—R—	OPENED	25 27
WHEAT (AUSTRALIA) DURUM LENTILS (ESTON)	—W—	OPENED	27 29 27
LUPINS	—L—	REMOVED	25
FABA BEANS	—F—	REMOVED	28
MARAFAT PEAS (LARGE)	—M—	REMOVED	28
TRAPPER PEAS CENTURY PEAS (SMALL + MEDIUM)	—P—	REMOVED	29 27

NOTE: 1) RATE CHART APPLIES TO 7–1/2" 8" 9" 10" & 12" SPACINGS.
2) CLUTCH OUTPUT SPROCKETS FOR: 7–1/2" SPACING – 12 TOOTH
8" SPACING – 13 TOOTH
9" SPACING – 15 TOOTH
10" SPACING – 17 TOOTH
12" SPACING – 20 TOOTH
3) THIS RATE CHART SHOULD ONLY BE TAKEN AS A GUIDE FOR FINDING THE APPROXIMATE SPROCKET. RATE WILL VARY WITH DIFFERENT MATERIAL DENSITIES AND SEED SIZES. SEE PROCEDURE DESCRIBED IN THE OPERATORS MANUAL TO OBTAIN A PRECISE RATE.
4) THIS RATE CHART IS NOT INDICATIVE OF THE MAXIMUM AMOUNT OF PRODUCT THAT CAN BE APPLIED. CAPACITY WILL VARY WITH GROUND SPEED AND CULTIVATOR WIDTH.
5)

METERSHAFT SPROCKET		QUICK CHANGE SPROCKETS
25 TOOTH	–	45 TOOTH MAX. 12 TOOTH MIN.
35 TOOTH	–	33 TOOTH MAX. 12 TOOTH MIN.
40 TOOTH	–	26 TOOTH MAX. 12 TOOTH MIN.
15 TOOTH	–	45 TOOTH MAX. 18 TOOTH MIN.

NOTE: –THIS RATE CHART IS FOR SLOW SPEED DRIVE WITH COUPLER KIT DRIVEN BY FRONT TRANSMISSION

N31198

Metric Rate Charts - continued

Slow Speed: (Front Transmission) Fertilizer

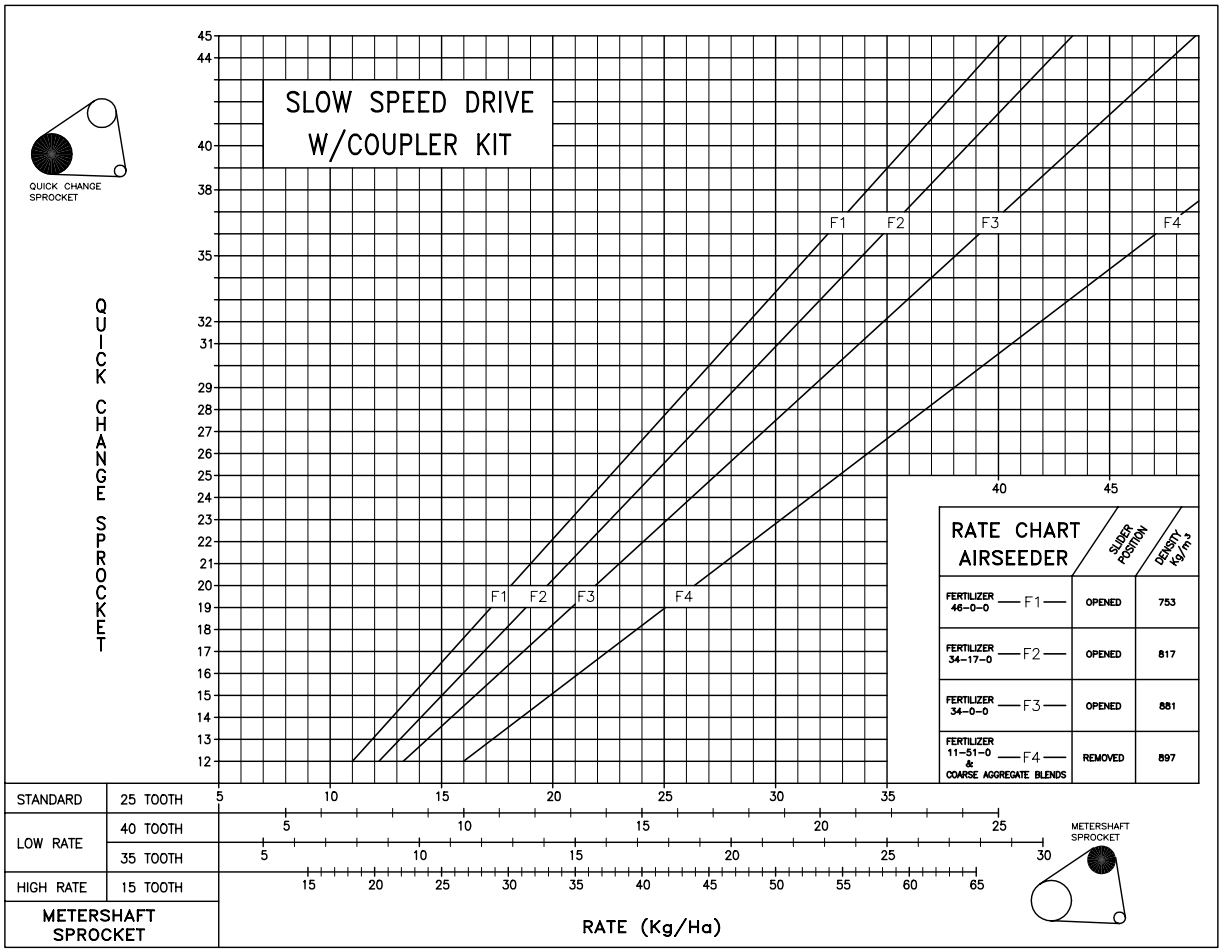

NOTE: 1) RATE CHART APPLIES TO 7–1/2" 8" 9" 10" & 12" SPACINGS.
2) CLUTCH OUTPUT SPROCKETS FOR: 7–1/2" SPACING – 12 TOOTH
8" SPACING – 13 TOOTH
9" SPACING – 15 TOOTH
10" SPACING – 17 TOOTH
12" SPACING – 20 TOOTH
3) THIS RATE CHART SHOULD ONLY BE TAKEN AS A GUIDE FOR FINDING THE APPROXIMATE SPROCKET. RATE WILL VARY WITH DIFFERENT MATERIAL DENSITIES AND SEED SIZES. SEE PROCEDURE DESCRIBED IN THE OPERATORS MANUAL TO OBTAIN A PRECISE RATE.
4) THIS RATE CHART IS NOT INDICATIVE OF THE MAXIMUM AMOUNT OF PRODUCT THAT CAN BE APPLIED. CAPACITY WILL VARY WITH GROUND SPEED AND CULTIVATOR WIDTH.
5)

METERSHAFT SPROCKET		QUICK CHANGE SPROCKETS
25 TOOTH	–	45 TOOTH MAX. 12 TOOTH MIN.
35 TOOTH	–	33 TOOTH MAX. 12 TOOTH MIN.
40 TOOTH	–	26 TOOTH MAX. 12 TOOTH MIN.
15 TOOTH	–	45 TOOTH MAX. 18 TOOTH MIN.

NOTE: –THIS RATE CHART IS FOR SLOW SPEED DRIVE WITH COUPLER KIT DRIVEN BY FRONT TRANSMISSION

N31200

Imperial Rate Charts

Slow Speed: (Front Transmission) Small Seeds

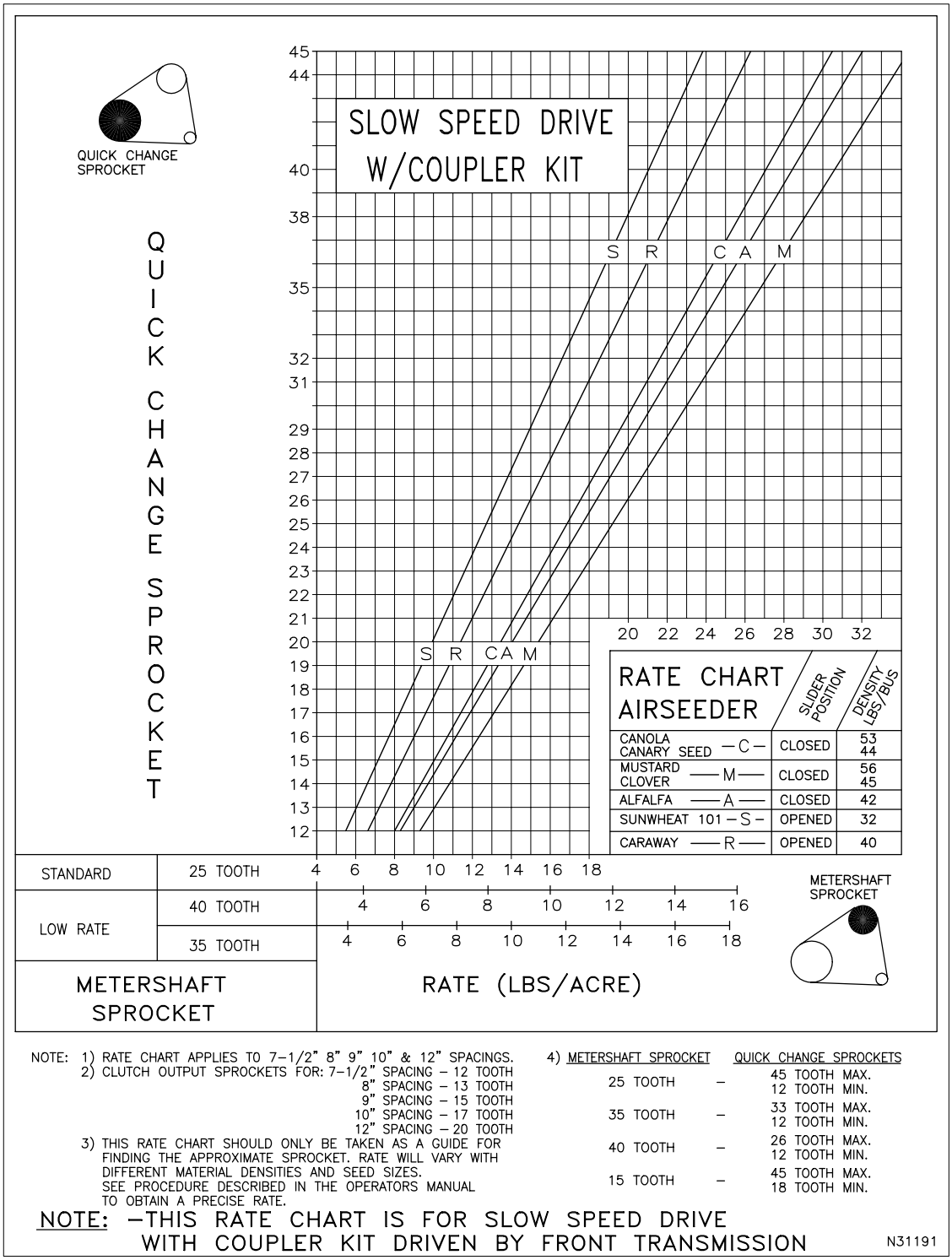

NOTE: 1) RATE CHART APPLIES TO 7–1/2" 8" 9" 10" & 12" SPACINGS.
2) CLUTCH OUTPUT SPROCKETS FOR: 7–1/2" SPACING – 12 TOOTH
8" SPACING – 13 TOOTH
9" SPACING – 15 TOOTH
10" SPACING – 17 TOOTH
12" SPACING – 20 TOOTH
3) THIS RATE CHART SHOULD ONLY BE TAKEN AS A GUIDE FOR FINDING THE APPROXIMATE SPROCKET. RATE WILL VARY WITH DIFFERENT MATERIAL DENSITIES AND SEED SIZES. SEE PROCEDURE DESCRIBED IN THE OPERATORS MANUAL TO OBTAIN A PRECISE RATE.

4)

METERSHAFT SPROCKET		QUICK CHANGE SPROCKETS
25 TOOTH	–	45 TOOTH MAX. 12 TOOTH MIN.
35 TOOTH	–	33 TOOTH MAX. 12 TOOTH MIN.
40 TOOTH	–	26 TOOTH MAX. 12 TOOTH MIN.
15 TOOTH	–	45 TOOTH MAX. 18 TOOTH MIN.

NOTE: –THIS RATE CHART IS FOR SLOW SPEED DRIVE WITH COUPLER KIT DRIVEN BY FRONT TRANSMISSION

N31191

Imperial Rate Charts - continued

Slow Speed: (Front Transmission) Regular Seeds

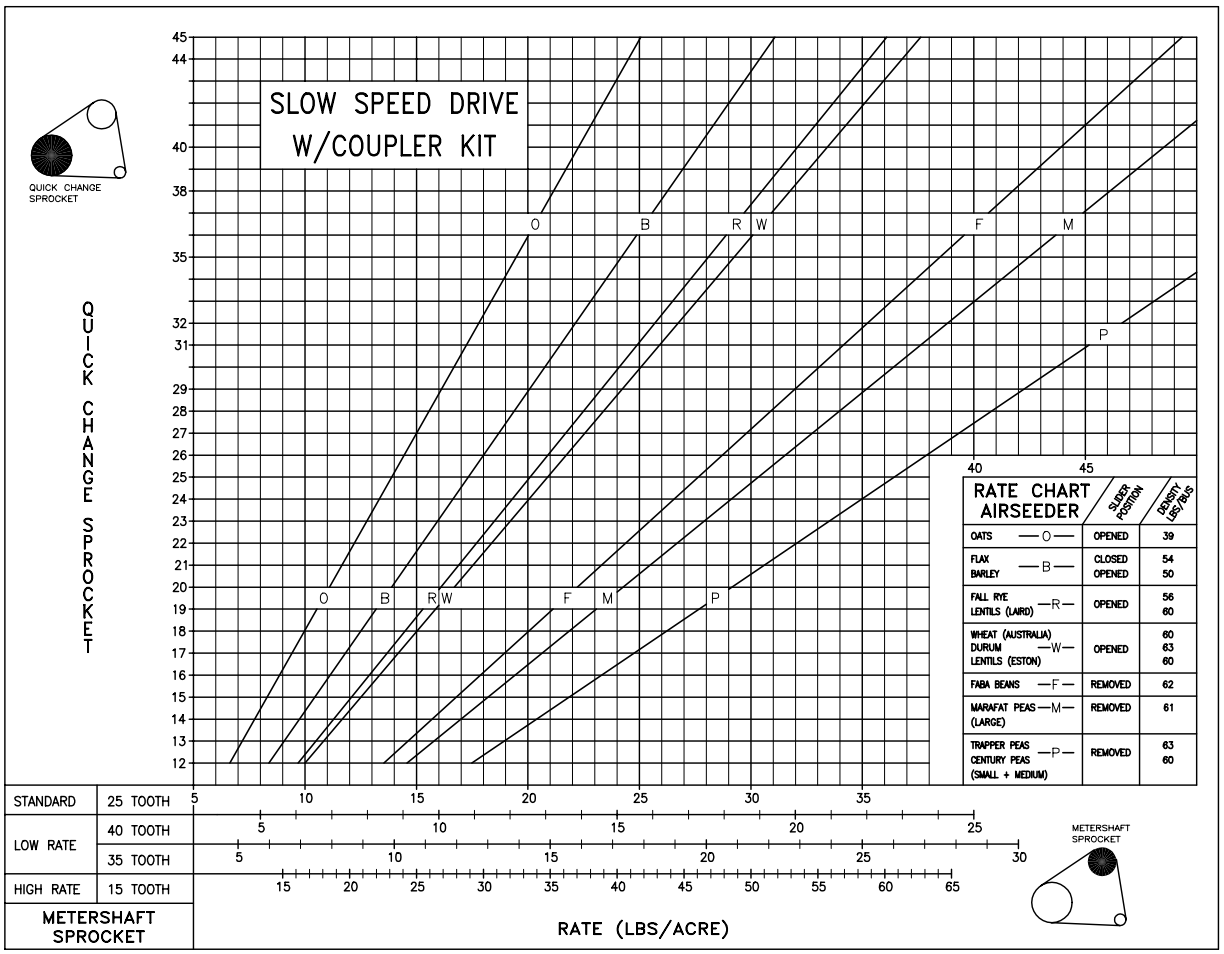

NOTE: 1) RATE CHART APPLIES TO 7–1/2" 8" 9" 10" & 12" SPACINGS.
2) CLUTCH OUTPUT SPROCKETS FOR: 7–1/2" SPACING – 12 TOOTH
8" SPACING – 13 TOOTH
9" SPACING – 15 TOOTH
10" SPACING – 17 TOOTH
12" SPACING – 20 TOOTH
3) THIS RATE CHART SHOULD ONLY BE TAKEN AS A GUIDE FOR FINDING THE APPROXIMATE SPROCKET. RATE WILL VARY WITH DIFFERENT MATERIAL DENSITIES AND SEED SIZES. SEE PROCEDURE DESCRIBED IN THE OPERATORS MANUAL TO OBTAIN A PRECISE RATE.

4) THIS RATE CHART IS NOT INDICATIVE OF THE MAXIMUM AMOUNT OF PRODUCT THAT CAN BE APPLIED. CAPACITY WILL VARY WITH GROUND SPEED AND CULTIVATOR WIDTH.

5)

METERSHAFT SPROCKET		QUICK CHANGE SPROCKETS
25 TOOTH	–	45 TOOTH MAX. 12 TOOTH MIN.
35 TOOTH	–	33 TOOTH MAX. 12 TOOTH MIN.
40 TOOTH	–	26 TOOTH MAX. 12 TOOTH MIN.
15 TOOTH	–	45 TOOTH MAX. 18 TOOTH MIN.

NOTE: –THIS RATE CHART IS FOR SLOW SPEED DRIVE WITH COUPLER KIT DRIVEN BY FRONT TRANSMISSION

N31197

Imperial Rate Charts - Continued

Slow Speed: (Front Transmission) Fertilizer

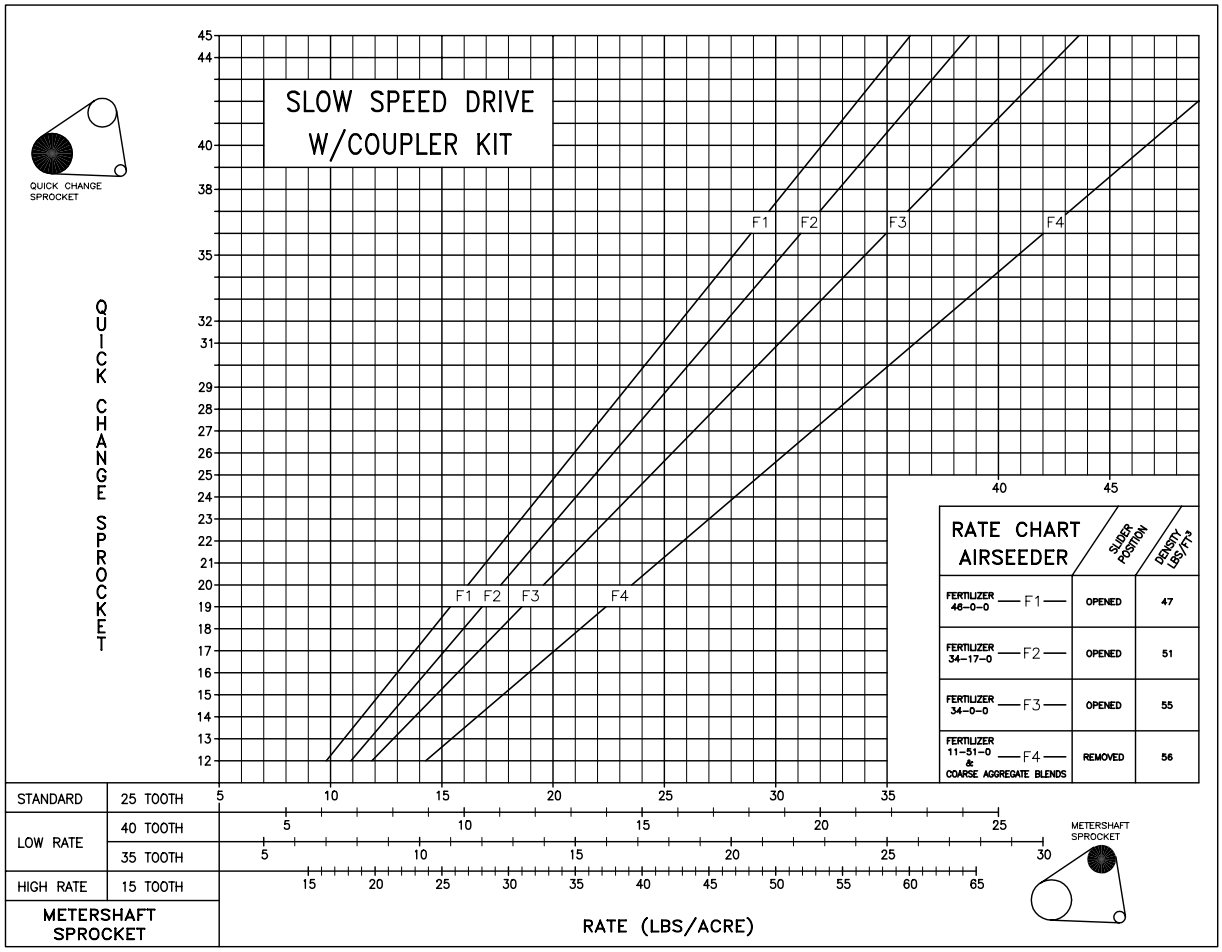

NOTE: 1) RATE CHART APPLIES TO 7–1/2" 8" 9" 10" & 12" SPACINGS.
2) CLUTCH OUTPUT SPROCKETS FOR: 7–1/2" SPACING – 12 TOOTH
8" SPACING – 13 TOOTH
9" SPACING – 15 TOOTH
10" SPACING – 17 TOOTH
12" SPACING – 20 TOOTH
3) THIS RATE CHART SHOULD ONLY BE TAKEN AS A GUIDE FOR FINDING THE APPROXIMATE SPROCKET. RATE WILL VARY WITH DIFFERENT MATERIAL DENSITIES AND SEED SIZES. SEE PROCEDURE DESCRIBED IN THE OPERATORS MANUAL TO OBTAIN A PRECISE RATE.
4) THIS RATE CHART IS NOT INDICATIVE OF THE MAXIMUM AMOUNT OF PRODUCT THAT CAN BE APPLIED. CAPACITY WILL VARY WITH GROUND SPEED AND CULTIVATOR WIDTH.
5)

METERSHAFT SPROCKET		QUICK CHANGE SPROCKETS
25 TOOTH	–	45 TOOTH MAX. 12 TOOTH MIN.
35 TOOTH	–	33 TOOTH MAX. 12 TOOTH MIN.
40 TOOTH	–	26 TOOTH MAX. 12 TOOTH MIN.
15 TOOTH	–	45 TOOTH MAX. 18 TOOTH MIN.

NOTE: –THIS RATE CHART IS FOR SLOW SPEED DRIVE WITH COUPLER KIT DRIVEN BY FRONT TRANSMISSION

N31199

MORRIS

Advanced Air Seeding and Tillage Systems

Corporate Head Office:	2131 Airport Drive Saskatoon, Saskatchewan S7L 7E1 Canada Phone: 306-933-8585 Fax: 306-933-8626
USA Head Office:	4400 Burdick Expressway East Minot, North Dakota 58701 USA. Phone: 701-852-4171 Fax: 701-838-9444
Manufacturing and Research & Development:	P.O. Box 5008, 85 York Road Yorkton, Saskatchewan S3N 3P2 Canada Phone: 306-783-8585 Fax: 306-782-5250
Manufacturing:	284 - 6th Ave. N.W. Minnedosa, Manitoba R0J 1E0 Canada Phone: 204-867-2713 Fax: 204-867-2678

It is the policy of Morris Industries Ltd. to improve its products whenever it is possible to do so. Morris reserves the right to make changes or add improvements at any time without incurring any obligation to make such changes on machines sold previously.

Printed in Canada

September 2004