MERIDIAN

BULK SEED TENDER

OPERATOR'S MANUAL

PATENT PROTECTED
This product is covered by one or more U.S., Canadian, Foreign patents and/or pending patent applications. For details, see:
meridianmfg.com/patents

SEED EXPRESS

FOR OWNERS AND OPERATORS OF THE 275 DX / 375 DX

Unverferth Exhibit 2007
Par-Kan v. Unverferth
IPR2024-01427

PRODUCT WARRANTY
REGISTRATION FORM

MERIDIAN
MANUFACTURING GROUP

WARRANTY REGISTRATION

This form must be filled out by the dealer and signed by both the dealer and the customer at the time of delivery. Please mail or fax the completed form for validation of the equipment registration.

Customer's Name_____

Address _____

City, State, Postal Code_____, _____, _____

Phone Number (_____) _____- _____

PRODUCT INFORMATION

Tender Model #_____ **Serial Number #**_____

DEALER INSPECTION REPORT

____Tender frame secured to trailer
____Check fuel level and gas shut-off
____Check crankcase oil level
____Start Honda eEngine
____Brake and lighting harness connection
____Remote throttle control functions
____Conveyor platform pivots correctly
____Lubricate unit where necessary
____Check air pressure in tires
____Electric brakes in working condition
____All guards/shields installed correctly
____All safety signs installed and intact
____Reflectors and lights clean and working
____Review safety and operating instructions
____Inspect customer's hitch for 2-5/16" ball/gooseneck hitch
____Verify receipt of all options ordered

I have thoroughly instructed the buyer on the above-described equipment, including review of the Operator's Manual content, equipment care, adjustments, operational use, safety procedures, and applicable warranty policy.

Dealer/Company Name_____

City, State, Postal Code _____, _____, _____

Dealer's Signature_____**Date** ____/____/_____

The above equipment and Operator's Manual have been received by me, and I have been thoroughly instructed as to care, adjustments, safe operation, and applicable warranty policy.

Owner's Signature_____ **Date** ____/____/_____

2902 Expansion Blvd. Storm Lake, Iowa 50588 Phone: 800-437-2334 Fax: 712-732-1028 Email: iowa_warranty@meridianmfg.com

Cut Here to Remove Page

2902 Expansion Blvd.
Storm Lake, IA 50588
Phone: 712-732-1780
Fax: 712-732-1028

CERTIFICATE OF ORIGIN

LICENSING INFORMATION

Date: ____/___/_____

DEALER:

_____Business
_____Contact
_____Address
_____City, State, Zip

SOLD TO:

_____Business
_____Contact
_____Address
_____City, State, Zip

TENDER MODEL # _____

TENDER WEIGHT _____

TENDER SERIAL # _____

TRAILER MODEL # _____

TRAILER SERIAL #* _____

TRAILER WEIGHT _____

(*Only one serial number is issued for a complete tender package which will include the trailer. The trailer in these complete packages does not receive a separate serial number.)

Tender 110 BST Wagon	80110	1,004#
Tender 110 BST-T (trailer included)	80111	1,830#
Tender 220 BST Wagon	80220	1,866#
Tender 220 BST-T (trailer included)	80221	3,495#
Tender 240RT6 Wagon	80242	2,545#
Tender 240RT6-BWT (trailer included)	80247	4,475#
Tender 240RT6-T (trailer included)	80244	4,174#
Tender 240RT8 Wagon	80245	2,604#
Tender 240RT8-BWT (trailer included)	80241	4,534#
Tender 240RT8-T (trailer included)	80246	4,232#
Tender 240SE-T (trailer included)	80243	4,491#
Tender 375RT6 Wagon	80375	3,094#
Tender 375RT6-T (trailer included)	80378	5,636#
Tender 375RT6-BWT (trailer included)	80374	5,942#
Tender 375RT8 Wagon	80376	3,106#
Tender 375RT8-BWT (trailer included)	80377	5,913#
Tender 375RT8-T (trailer included)	80379	5,607#
Tender T2SE-T (trailer included)	80201	2,002#
Tender T2-T (trailer included)	80200	1,555#

Tender T4SE Wagon	80401	2,803#
Tender T4SE-BWT (trailer included)	80403	4,833#
Tender T4SE-T (trailer included)	80402	4,431#
T6000ST Trailer	80311	826#
T14000ST Trailer	80307	1,628#
T21000ST Trailer	80308	2,501#
Tender 275BH-6DX (trailer included)	80203	4,807#
Tender 275GN-6DX (trailer included)	80204	5,399#
Tender 275-6DX	80202	4,188#
Tender 275BH-8DX (trailer included)	80206	4,924#
Tender 275GN-8DX (trailer included)	80207	5,517#
Tender 275-8DX	80205	4,305#
Tender 375BH-6DX (trailer included)	80332	5,029#
Tender 375GN-6DX (trailer included)	80333	5,623#
Tender 375-6DX	80331	4,343#
Tender 375BH-8DX (trailer included)	80335	5,146#
Tender 375GN-8DX (trailer included)	80336	5,739#
Tender 375-8DX	80334	4,460#

Cut Here to Remove Page

IMPORTANT INFORMATION

SERIAL NUMBER LOCATION

Report the serial number of your Meridian 275 DX or 375 DX Seed Express and engine when ordering parts or requesting service or other information.

The serial number plates are located where indicated. Please mark the number in the space provided for easy reference.

Seed Tender

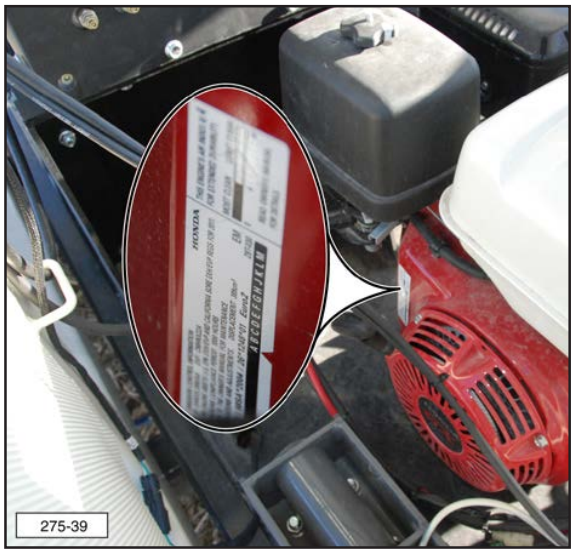

Engine

Model Number: _____

Serial Number: _____

Engine Serial Number: _____

PATENT INFORMATION

Meridian continuously enhances its product offering through product improvements and new product innovations. Marketplace feedback, technological innovation, new materials and manufacturing methods, and a philosophy of continuous improvement constantly challenge the company to develop new and better ways of addressing market needs. Meridian is committed to innovation and reinvestment and as a result, the company maintains a portfolio of patents and intellectual property. For more information on our patents please see our website: www.meridianmfg.com/patents

CONTENTS

1. INTRODUCTION . . . 11
1.1 Congratulations . . . 11
1.2 Operator Orientation . . . 11
1.3 Owner/Operator . . . 11

2. SAFETY . . . 12
2.2 Equipment Safety Guidelines . . . 14
2.3 Safety Training . . . 14
2.4 Safety Signs . . . 15
2.4.1 How to Install Safety Signs . . . 15
2.5 Preparation . . . 15
2.6 Operating Safety . . . 15
2.7 Maintenance Safety . . . 16
2.8 Lock-Out or Tag-Out Safety . . . 16
2.9 Storage Safety . . . 17
2.10 Transport Safety . . . 17
2.11 Refuelling Safety . . . 17
2.12 Battery Safety . . . 17
2.13 Sign-Off Form . . . 18

3. SAFETY SIGN LOCATIONS . . . 19

4. SPECIFICATIONS . . . 22
4.1 Overall Seed Tender Specifications . . . 22
4.2 Bolt Specifications . . . 23
4.2.1 Bolt Torque Values . . . 23
4.2.2 Grade Markings Chart . . . 23

5. MACHINE COMPONENTS AND CONTROLS . . . 24
5.1 Component Nomenclature and Location . . . 24
5.2 Engine and Controls . . . 25
5.3 Control System Functions . . . 26
5.3.1 Control Functions . . . 26
5.3.2 Setting the Weight to Dispense . . . 27
5.3.3 Setting Active Slide Gate . . . 27
5.3.4 Auto Reset Function . . . 27
5.3.5 Control System Compliance Information . . . 27
5.4 Wireless Remote Transmitter . . . 28
5.4.1 Functions of Keypad Buttons . . . 28
5.4.2 Display Panel . . . 29
5.4.3 Display Messages . . . 30

6. PRE-OPERATING INSTRUCTIONS . . . 31
6.1 Machine Break-In Period . . . 31
6.1.1 Before Starting . . . 31
6.1.2 Inspections for 1/2, 5, and 10 Hours . . . 31
6.2 Pre-Operation Checklist . . . 32

7. OPERATION . . . 33
7.1 Connecting the Trailer . . . 33
7.1.1 Bumper Hitch . . . 33
7.1.2 Gooseneck Hitch . . . 34
7.2 Opening and Closing Roll-Up Tarp . . . 36
7.3 Operation . . . 37
7.3.1 Loading (Filling the Seed Tender) . . . 37
7.3.2 Unloading (Filling the Planter) . . . 40

8. STORAGE . . . 42
8.1 General Information . . . 42
8.2 Placing in Storage . . . 42
8.3 Removing from Storage . . . 42

9. MAINTENANCE . . . 43
9.1 Greasing . . . 43
9.2 Grease Fitting Locations . . . 43

10. SERVICE PROCEDURES . . . 44
10.1 Remote Control Unit . . . 44
10.1.1 Battery Replacement Tips . . . 44
10.1.2 Battery Replacement . . . 44
10.1.3 Remote Control Transmitter and Receiver Synchronization . . . 44
10.2 Hydraulic System . . . 45
10.2.1 Hydraulic Oil Change . . . 45
10.2.2 Hydraulic Pressure Relief Valves . . . 45
10.2.3 Hydraulic Motor Coupling . . . 46
10.3 Engine . . . 46
10.3.1 Approved Fuel . . . 46
10.3.2 Engine Oil . . . 46
10.3.3 Change Engine Oil . . . 46
10.3.4 Clean Air Cleaner . . . 47
10.4 Load Cells . . . 47
10.4.1 Wiring Connections to Scale Box . . . 47
10.5 Belt Delivery Tube . . . 48
10.5.1 Unplugging . . . 48
10.5.2 Belt Tension Adjustment . . . 48
10.5.3 Belt Tracking Adjustment . . . 49
10.5.4 Belt Replacement . . . 49
10.6 Trailer Break-Away System . . . 50
10.6.1 Testing the Battery . . . 50
10.6.2 Changing Battery . . . 50
10.7 Wheel Bolt Torque Requirements . . . 51
10.8 Trailer Hitch Bolts . . . 51
10.9 Service Record Chart . . . 51
10.9 Service Record Chart (Continued) . . . 52
10.10 Service Checks . . . 53
10.10.1 Daily (8 Hours) . . . 53
10.10.2 Weekly (50 Hours) . . . 53
10.10.3 Annually (400 Hours) . . . 53
10.11 Axle Maintenance . . . 54
10.11.1 First 200 Miles . . . 54
10.11.2 3,000 Miles or 3 Months . . . 54
10.11.3 6,000 Miles or 6 Months . . . 54
10.11.4 12,000 Miles or 12 Months . . . 54
10.12 Tires . . . 54

11. OEM LITERATURE . . . 55
11.1 Honda® Engine . . . 55
11.2 Retractable Compartment Tarp . . . 55
11.3 Axle . . . 55

12. TROUBLESHOOTING . . . 56
12.1 Troubleshooting Chart . . . 56
12.2 Control Panel Indicator LEDs . . . 56
12.2.1 Error Code Outputs . . . 56
12.2.2 Error Codes . . . 57
12.2.3 Control System Wiring Locations . . . 57

13. WARRANTY 58
13.1 Warranty Statement. 58

14. PARTS 59
14.1 275 DX / 375 DX 2012 Seed Express 80371 60
14.1 Ladder Detail 62
14.2 Lights, Decals, and Tarp Detail 63
14.3 Turret Detail. 64
14.4 Power System Detail 65
14.5 Slide Gate Detail 66
14.6 Sample Slide Gate Detail 67
14.7 Gooseneck Detail 68
14.8 Bumper Hitch Detail 69
14.9 Axle Detail 70
14.10 Conveyor (6”) 80626 72
14.10.1 Pan Detail 74
14.10.2 Tube Detail 75
14.10.3 Discharge Detail 76
14.11 Conveyor (8”) 80627. 78
14.11.1 Pan Detail 80
14.11.2 Tube Detail 81
14.11.3 Discharge Detail. 82

1. INTRODUCTION

1.1 CONGRATULATIONS

Congratulations on your choice of a Meridian Manufacturing Group 275 DX or 375 DX Seed Express Bulk Seed Tender to complement your seed delivery system in your farming operation. This equipment has been designed and manufactured to meet the exacting standards for such equipment in the agricultural industry and will keep your seed delivery system at optimum efficiency.

The Bulk Seed Tender system is designed to handle any kind of bulk seed, quickly transport it, and then transfer it into planters and drills, as required. This unit is designed to not only off-load bulk seed into the planting equipment, but it can also load itself from a bulk seed storage container or truck.

Safe, efficient, and trouble-free operation of your Bulk Seed Tender requires that you and anyone else who will be operating or maintaining the machine, read and understand the Safety, Operation, Maintenance, and Troubleshooting information contained within this Operator's Manual.

This manual covers both the 275 DX or 375 DX models manufactured by Meridian Manufacturing Group, Inc. The differences are explained where appropriate. Use the Table of Contents and Index as a guide to locate required information.

1.2 OPERATOR ORIENTATION

The directions left, right, front and rear, as mentioned throughout this manual, are as seen from the truck drivers' seat and facing in the direction of travel.

1.3 OWNER/OPERATOR

It is the responsibility of the owner or operator to read this manual and to train all other operators before they start working with the machine. Follow all safety instructions exactly. Safety is everyone's business. By following recommended procedures, a safe working environment is provided for the operator, bystanders, and the area around the work site. Untrained operators are not qualified and must not operate the machine.

In addition to the design and configuration of equipment, hazard control and accident prevention are dependent upon the awareness, concern, prudence, and proper training of personnel involved in the operation, transport, maintenance, and storage of equipment. It is the responsibility of the owner or operator to read this manual and to train all operators before they start working with the machine. Follow all safety instructions as laid out in this manual.

Keep this manual handy for easy reference and to pass on to new operators or owners. Call your Meridian Manufacturing Group, Inc. dealer if you need assistance, information, or additional copies of the manuals.

The information, specifications, and illustrations in this manual are those in effect at the time of printing. We reserve the right to change specifications or design at any time without notice.

SAFETY ALERT SYMBOL

This Safety Alert symbol means
ATTENTION! BECOME ALERT!
YOUR SAFETY IS INVOLVED!

The Safety Alert symbol identifies important safety messages on the Meridian Bulk Seed Tender Models and in the manual. When you see this symbol, be alert to the possibility of personal injury or death. Follow the instructions in the safety message.

WHY IS SAFETY IMPORTANT TO YOU?

3 Big Reasons

• Accidents Disable and Kill •

• Accidents Cost •

• Accidents Can Be Avoided •

SIGNAL WORDS:

Note the use of the signal words **DANGER, WARNING,** and **CAUTION** with the safety messages. The appropriate signal word for each message has been selected using the following guidelines:

CAUTION - Indicates a potentially hazardous situation that, if not avoided, may result in minor or moderate injury. It may also be used to alert against unsafe practices.

WARNING - Indicates a potentially hazardous situation that, if not avoided, could result in death or serious injury, and includes hazards that are exposed when guards are removed. It may also be used to alert against unsafe practices.

DANGER - Indicates an imminently hazardous situation that, if not avoided, will result in death or serious injury. This signal word is to be limited to the most extreme situations typically for machine components which, for functional purposes, cannot be guarded.

If you have any questions not answered in this manual, require additional copies of the manual, or the manual is damaged, please contact your dealer or Meridian Manufacturing Group, 2902 Expansion Blvd., Storm Lake, Iowa, 50588, toll free 1-800-437-2334, phone (712) 732-1780, or fax (712) 732-1028.

YOU are responsible for the **SAFE** operation and maintenance of your Meridian Manufacturing Group bulk seed tender Model 275 DX or 375 DX Seed Express delivery system. **YOU** must ensure that you and anyone else who is going to operate, maintain, or work around the Bulk Seed Tender be familiar with the operating and maintenance procedures and related **SAFETY** information contained in this manual. This manual will take you step-by-step through your working day and alert you to all good safety practices that should be adhered to while operating the Bulk Seed Tender system.

Remember, **YOU** are the key to safety. Good safety practices not only protect you but also the people around you. Make these practices a working part of your safety program. Be certain that **EVERYONE** operating this equipment is familiar with the recommended operating and maintenance procedures and follow all the safety precautions. Most accidents can be prevented. Do not risk injury or death by ignoring good safety practices.

- Bulk Seed Tender system owners must give operating instructions to operators or employees before allowing them to operate the machine, and then annually thereafter per OSHA (Occupational Safety and Health Administration) regulation 1928.57.
- The most important safety feature on this equipment is a **SAFE** operator. It is the operator's responsibility to read and follow **ALL** Safety and Operating instructions in the manual. Most accidents can be avoided.
- A person who has not read and understood all operating and safety instructions is not qualified to operate the machine. An untrained operator exposes himself and bystanders to possible serious injury or death. Always be and stay alert to any possible unsafe operating or maintenance procedures or conditions.
- Do not modify the equipment in any way. Unauthorized modification may impair the function and/or safety of the components and systems and could affect the life of the equipment, possibly invalidating the warranty coverage.
- Think SAFETY! Work SAFELY!

2.1 General Safety

1. Read and understand the Operator's Manual and all safety signs before operating, maintaining, adjusting, filling, unloading, or unplugging the Bulk Seed Tender system.
2. Have a first aid kit available for use should the need arise and know how to use it.
3. Have a fire extinguisher available for use should the need arise and know how to use it.
4. Do not allow riders.
5. When working around or operating this equipment, wear appropriate personal protective equipment. This list includes but is not limited to:

   - A hard hat
   - Protective shoes with slip resistant soles
   - Protective goggles, glasses, or face shield
   - Heavy gloves and protective clothing
   - Respirator
6. Do not allow long hair, loose fitting clothing, or jewelry around equipment.
7. Install and secure all guards before starting.
8. Stop engine, remove ignition key, and wait for all moving parts to stop before servicing, repairing, adjusting, loading, filling, or unplugging.
9. Establish a lock-out or tag-out policy for the work site. Be sure all personnel are trained in and follow all procedures. Lock-out or tag-out all power sources before working around loading/ unloading equipment.
10. Clear the area of people, especially small children, before starting.
11. Review safety related items annually with all personnel who will be operating, using, or maintaining the bulk seed tender system.

2.2 EQUIPMENT SAFETY GUIDELINES

1. Safety of the operator and bystanders is one of the main concerns in designing and developing a machine. However, every year many accidents occur which could have been avoided by a few seconds of thought and a more careful approach to handling equipment. You, the operator, can avoid many accidents by observing the following precautions in this section. To avoid personal injury or death, study the following precautions and insist those working with you, or for you, follow them.

2. In order to provide a better view, certain photographs or illustrations in this manual may show an assembly with a safety shield removed. However, equipment should never be operated in this condition. Keep all shields in place. If shield removal becomes necessary for repairs, replace the shield prior to use.

3. Never use alcoholic beverages or sedative drugs while operating this equipment. Consult your doctor about operating this machine while taking prescription medications.

4. Under no circumstances should young children be allowed to work with this equipment. Do not allow persons to operate or assemble this unit until they have read this manual and have developed a thorough understanding of the safety precautions and how it works. Review the safety instructions with all users annually.

5. This equipment is dangerous to children and persons unfamiliar with its operation. The operator should be a responsible, properly trained, and physically able person familiar with farm machinery and trained in this equipment's operations. If the elderly are assisting with farm work, their physical limitations need to be recognized and accommodated.

6. Never exceed the limits of a piece of machinery. If its ability to do a job, or to do so safely, is in question - **DON'T TRY IT.**

7. Do not modify the equipment in any way. Unauthorized modification may result in serious injury or death and may impair the function and life of the equipment.

8. In addition to the design and configuration of this implement, including Safety Signs and Safety Equipment, hazard control and accident prevention are dependent upon the awareness, concern, prudence, and proper training of personnel involved in the operation, transport, maintenance, and storage of the machine. Refer to Safety Messages and operation instruction in each of the appropriate sections of the auxiliary equipment and machine Manuals. Note all Safety Signs affixed to the auxiliary equipment.

2.3 SAFETY TRAINING

1. Safety is a primary concern in the design and manufacture of our products. Unfortunately, our efforts to provide safe equipment can be wiped out by a single careless act of an operator or bystander.

2. In addition to the design and configuration of equipment, hazard control and accident prevention are dependent upon the awareness, concern, prudence, and proper training of personnel involved in the operation, transport, maintenance, and storage of this equipment.

3. The best safety feature is an informed, careful operator. It is the operator's responsibility to read and comply with ALL Safety and Operating instructions in the manual. Accidents can be avoided.

4. Working with unfamiliar equipment can lead to injuries. Read this manual, as well as the manual for your auxiliary equipment, before assembling or operating to acquaint yourself with the machines. If this machine is used by any person other than yourself, it is your responsibility to make certain that the operator reads and understands the operator's manuals and is instructed in safe and proper use.

5. Know your controls and how to immediately stop augers, conveyors, and any other auxiliary equipment in an emergency. Read this manual and the one provided with all auxiliary equipment.

6. Train all new personnel and review instructions frequently with employees. Be certain only a properly trained and physically able person will operate the machinery. A person who has not read and understood all operating and safety instructions is not qualified to operate the machine. An untrained operator exposes himself and bystanders to possible serious injury or death.

2.4 SAFETY SIGNS

1. Keep safety signs clean and legible at all times. Replace any safety sign or instruction sign that is missing or not legible. Refer to the Safety Sign Location section for additional information.

2. Replacement parts that displayed a safety sign should also display the current sign.

3. Replacement safety signs (labels) are available from your authorized Dealer Parts Department or the factory at no cost.

2.4.1 How to Install Safety Signs

- Be sure that the installation area is clean and dry.
- Be sure temperature is above 50°F (10°C).
- Determine exact position before you remove the backing paper.
- Remove the smallest portion of the split backing paper.
- Align the sign over the specified area and carefully press the small portion with the exposed sticky backing in place.
- Slowly peel back the remaining paper and carefully smooth the remaining portion of the sign in place.
- Small air pockets can be pierced with a pin and smoothed out using a piece of sign backing paper.

2.5 PREPARATION

1. Never operate the seed delivery system and auxiliary equipment until you have read and completely understand this manual, the auxiliary equipment Operator's Manual, and each of the Safety Messages found on the safety signs on the delivery system and auxiliary equipment.

2. **PROLONGED EXPOSURE TO LOUD NOISE MAY CAUSE PERMANENT HEARING LOSS!** Motors or equipment can be noisy enough to cause permanent or partial hearing loss. We recommend that you wear hearing protection on a full-time basis if the noise in the operator's position exceeds 80db. NOTE: Hearing loss from loud noise (tractors, chain saws, radios, and other such sources close to the ear) is cumulative over a lifetime with uncertain natural recovery.

3. Clear working area of debris, trash, or hidden obstacles that might be hooked or snagged, causing injury, damage, or tripping.

4. Operate only in daylight or good artificial light.

5. Be sure machine is properly attached to the trailer, adjusted, and in good operating condition.

6. Ensure that all guards, shielding, and safety signs are properly installed and in good condition.

7. Before starting, give the machine a "once over" for any loose bolts, worn parts, cracks, leaks, frayed belts, and make necessary repairs. Always follow maintenance instructions.

2.6 OPERATING SAFETY

1. Make sure that anyone who will be operating the bulk seed delivery system or working on or around the unit reads and understands all the operating, maintenance, and safety information in the operator's manual.

2. Keep all bystanders, especially children, away from the machine when loading or unloading, or when authorized personnel are carrying out maintenance work.

3. Establish a lock-out or tag-out policy for the work site. Be sure all personnel are trained in and follow all procedures. Lock-out or tag-out all power sources before servicing the unit or working around loading/ unloading equipment.

4. Stop engine, remove ignition key, and wait for all moving parts to stop before servicing, repairing, adjusting, loading, filling, or unplugging.

5. Keep working area clean and free of debris to prevent slipping or tripping.

6. Do not allow riders on the trailer or frame when transporting.

7. Keep hands, feet, hair, and clothing away from rotating parts.

8. Do not place hands, fingers, or arms between moving parts.

9. Stay away from overhead power lines. Electrocution can occur without direct contact.

10. Install and secure all guards before starting.

11. Use care when climbing on frame or ladder to prevent slipping or falling.

12. Fasten frame securely to trailer before transporting.

13. Always empty compartment 2 first to prevent an unbalanced load. An unbalanced load can cause the tender to upend.

14. Review safety related items annually with all personnel who will be operating, using, or maintaining the seed delivery system.

2.7 MAINTENANCE SAFETY

1. Good maintenance is your responsibility. Poor maintenance is an invitation for trouble.

2. Follow good shop practices.

3. Ensure proper ventilation. Never operate the engine in a closed building. The exhaust fumes may cause asphyxiation.

4. Before working on this machine, shut off the engine and remove the ignition keys.

5. Never work under equipment unless it is securely blocked.

6. Always use personal protection devices, such as eye, hand, and hearing protectors, when performing any service or maintenance.

7. Where replacement parts are necessary for periodic maintenance and servicing, genuine factory replacement parts must be used to restore your equipment to the original specifications. The manufacturer will not be responsible for injuries or damages caused by use of unapproved parts and/or accessories.

8. A fire extinguisher and first aid kit should be readily accessible while performing maintenance on this equipment.

9. Periodically tighten all bolts, nuts, and screws and ensure all cotter pins are properly installed to ensure unit is in safe condition.

10. When completing a maintenance or service function, make sure all safety shields and devices are installed before placing unit in service.

11. Turn OFF all electrical power and tag or lockout the power source before performing any electrical test or before connecting or disconnecting valve coils or other electrical loads.

12. Never operate or test any function of the equipment when people are in an area of a potential crush hazard.

2.8 LOCK-OUT OR TAG-OUT SAFETY

1. Establish a formal Lock-Out or Tag-Out program for your operation.

2. Train all operators and service personnel before allowing them to work around the seed delivery system.

3. Provide tags on the machine and a sign-up sheet to record tag-out details.

2.9 STORAGE SAFETY

1. Store the unit in an area away from human activity.
2. Do not permit children to play on or around the stored machine.
3. Store the unit in a dry, level area. Support the frame with planks, if required.

2.10 TRANSPORT SAFETY

1. Comply with local, state, and federal laws governing safety and conveyance of farm machinery on public roads.
2. Ensure all lights, reflectors, and other lighting requirements are installed and in good working condition.
3. Ensure that the trailer is equipped with brakes that are in good working order. Be familiar with their operation.
4. Do not exceed a safe travel speed. Slow down for rough terrain and when cornering.
5. Fasten frame securely to trailer before transporting.
6. Be sure the trailer is securely hitched to the towing vehicle and a retainer is used through the hitch jaws. Always attach a safety chain between the hitch and the towing vehicle.
7. Stay away from overhead power lines. Electrocution can occur without direct contact.
8. Plan your route to avoid heavy traffic.
9. Install auger spout transport lock before transporting.
10. Do not drink and drive.
11. Be a safe and courteous driver. Yield to oncoming traffic in all situations, including narrow bridges, intersections, etc. Watch for traffic when operating near or crossing roadways.
12. Never allow riders on the tender or the trailer.

2.11 REFUELLING SAFETY

1. Handle fuel with care. It is highly flammable.
2. Allow engine to cool for five minutes before refuelling. Clean up spilled fuel before restarting engine.
3. Do not refuel the machine while smoking or when near open flame or sparks.
4. Fill fuel tank outdoors.
5. Prevent fires by keeping machine clean of accumulated trash, straw, grease, and debris.

2.12 BATTERY SAFETY

1. Keep all sparks and flames away from batteries, as gas given off by electrolyte is explosive.
2. Avoid contact with battery electrolyte: wash off any spilled electrolyte immediately.
3. Wear safety glasses when working near batteries.
4. Do not tip batteries more than 45 degrees, to avoid electrolyte loss.
5. To avoid injury from spark or short circuit, disconnect battery ground cable before servicing any part of electrical system.

2.13 SIGN-OFF FORM

Meridian Manufacturing Group follows the general Safety Standards specified by the American Society of Agricultural Engineers (ASAE) and Occupational Safety and Health Administration (OSHA). Anyone who will be operating and/or maintaining the Meridian Manufacturing Group Bulk Seed Tender Model 275 DX or 375 DX seed delivery system must read and clearly understand ALL Safety, Operating, and Maintenance information presented in this manual.

Do not allow anyone to operate this equipment until such information has been reviewed. Annually review this information before the season start-up.

Make these periodic reviews of SAFETY and OPERATION a standard practice for all of your equipment. We feel an untrained operator is unqualified to operate this machine.

A sign-off sheet is provided for your record keeping to show that all personnel who will be working with the equipment have read and understand the information in the Operator's Manual and have been instructed in the operation of the equipment.

SIGN-OFF FORM		
Date	**Employee's Signature**	**Employer's Signature**

3. SAFETY SIGN LOCATIONS

The types of safety signs and locations on the equipment are shown in the following pages. Good SAFETY AWARENESS requires that you familiarize yourself with the various safety signs, the type of warning and the area, or a particular function related to that area.

REMEMBER - If safety signs have been damaged, removed, become illegible, or parts replaced without signs, new signs must be applied. New safety signs are available from your authorized dealer free of charge.

CAUTION

Read and understand the Operator's Manual before using.

- Review safety instructions annually.
- Stop engine, remove ignition key, and wait for all moving parts to stop before servicing, repairing, adjusting, loading, filling, or unplugging.
- Keep working area clean and free of debris to prevent slipping or tripping.
- Do not allow riders on the trailer or frame when transporting.
- Only enter seed compartment when it is empty.
- Keep hands, feet, hair, and clothing away from moving parts.
- Do not place hands, arms, or body between seed box and frame or lid to prevent pinching or crushing. Components can move unexpectedly.
- Do not place hands, fingers, or arms between unloading auger tube segments when placing in unloading configuration.
- Stay away from overhead power lines. Electrocution can occur without direct contact.
- Install and secure all guards before starting.
- Use care when climbing on frame or ladder to prevent slipping or falling.
- Do not smoke when refuelling or working around machine.
- Fasten frame securely to trailer before transporting.
- Always empty compartment 2 first to prevent an unbalanced load. An unbalanced load can cause hitch to upend.

19934

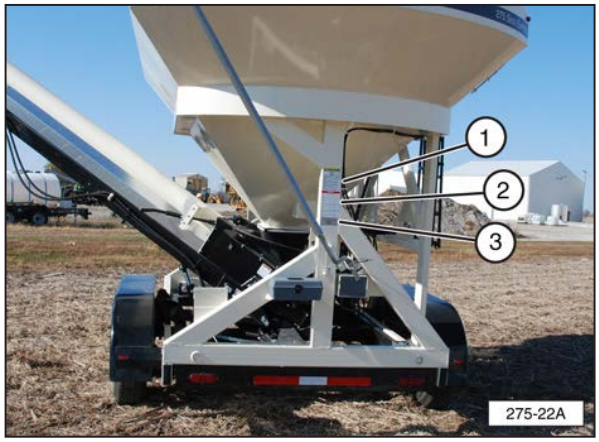

1. CAUTION — Read and Understand (#19934)

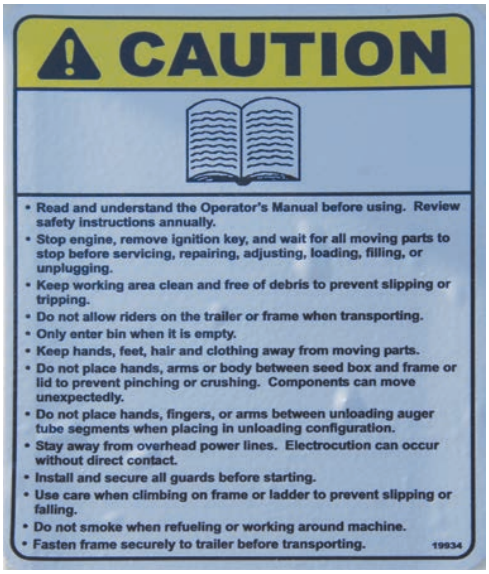

2. NOTICE — Product Warranty (#19944)

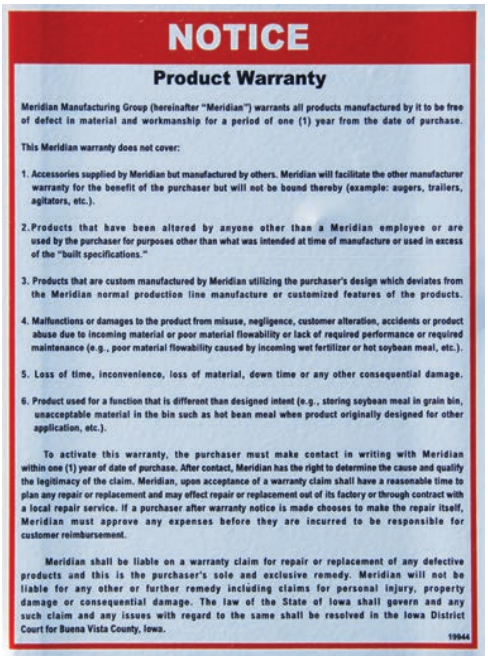

NOTICE

Product Warranty

Meridian Manufacturing Group (hereinafter "Meridian") warrants all products manufactured by it to be free of defect in material and workmanship for a period of one (1) year from the date of purchase.

This Meridian warranty does not cover:

1. Accessories supplied by Meridian but manufactured by others. Meridian will facilitate the other manufacturer warranty for the benefit of the purchaser but will not be bound thereby (example: augers, trailers, agitators, etc.).
2. Products that have been altered by anyone other than a Meridian employee or are used by the purchaser for purposes other than what was intended at time of manufacture or used in excess of the "built specifications."
3. Products that are custom manufactured by Meridian utilizing the purchaser's design which deviates from the Meridian normal production line manufacture or customized features of the products.
4. Malfunctions or damages to the product from misuse, negligence, customer alteration, accidents or product abuse due to incoming material or poor material flowability or lack of required performance or required maintenance (e.g., poor material flowability caused by incoming wet fertilizer or hot soybean meal, etc.).
5. Loss of time, inconvenience, loss of material, down time or any other consequential damage.
6. Product used for a function that is different than designed intent (e.g., storing soybean meal in grain bin, unacceptable material in the bin such as hot bean meal when product originally designed for other application, etc.).

To activate this warranty, the purchaser must make contact in writing with Meridian within one (1) year of date of purchase. After contact, Meridian has the right to determine the cause and qualify the legitimacy of the claim. Meridian, upon acceptance of a warranty claim shall have a reasonable time to plan any repair or replacement and may effect repair or replacement out of its factory or through contract with a local repair service. If a purchaser after warranty notice is made chooses to make the repair itself, Meridian must approve any expenses before they are incurred to be responsible for customer reimbursement.

Meridian shall be liable on a warranty claim for repair or replacement of any defective products and this is the purchaser's sole and exclusive remedy. Meridian will not be liable for any other or further remedy including claims for personal injury, property damage or consequential damage. The law of the State of Iowa shall govern and any such claim and any issues with regard to the same shall be resolved in the Iowa District Court for Buena Vista County, Iowa.

19944

3. Product Serial Number Decal

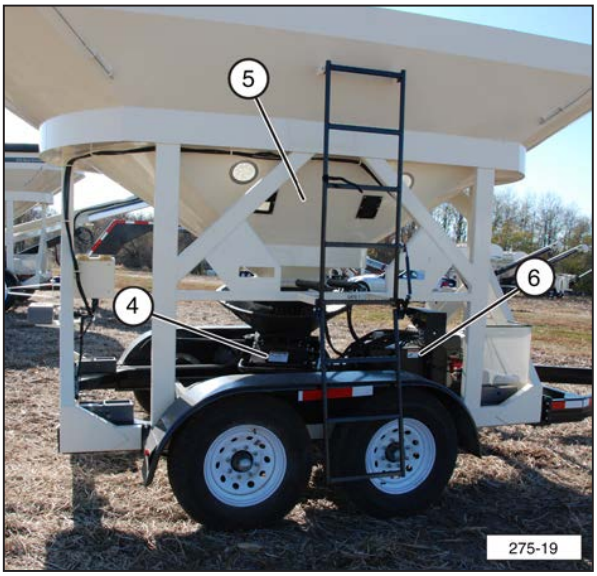

4. WARNING — Rotating Parts (#19936)

5. WARNING — Fall Hazard (#19939)

6. WARNING — Hot Surface (#20088)

7. WARNING — Pinch Point (#19935)

8. DANGER — Pinch Point (#20087)

4. SPECIFICATIONS

4.1 OVERALL SEED TENDER SPECIFICATIONS

			275 Seed Express	375 Seed Express
A	Overall Length	with Bumper Hitch	24' - 6"	24' - 6"
		with Gooseneck Hitch	24' - 6"	24' - 6"
B	Overall Width		8' - 6"	8' - 6"
C	Overall Height		10' - 3"	11' - 2"
D	Main Body Length		15'	15'
E	Main Body Width		8'	8'
F	Main Body Height		9' - 8"	9' - 8"
G	Base Length		10' - 5"	10' - 5"
H	Base Width		5' - 4 1/2"	5' - 4 1/2"
I	Base Mount Width		4' - 10"	4' - 10"
J	Conveyor Height in Transport		7' - 8"	7' - 8"
K	Conveyor Height at Maximum Unload		12' - 2"	12' - 2"
L	Conveyor Height at Minimum Unload		7' - 8"	7' - 8"
M	Conveyor Reach at Maximum Unload		14' - 5"	14' - 5"
N	Conveyor Reach at Minimum Unload		16' - 7"	16' - 7"

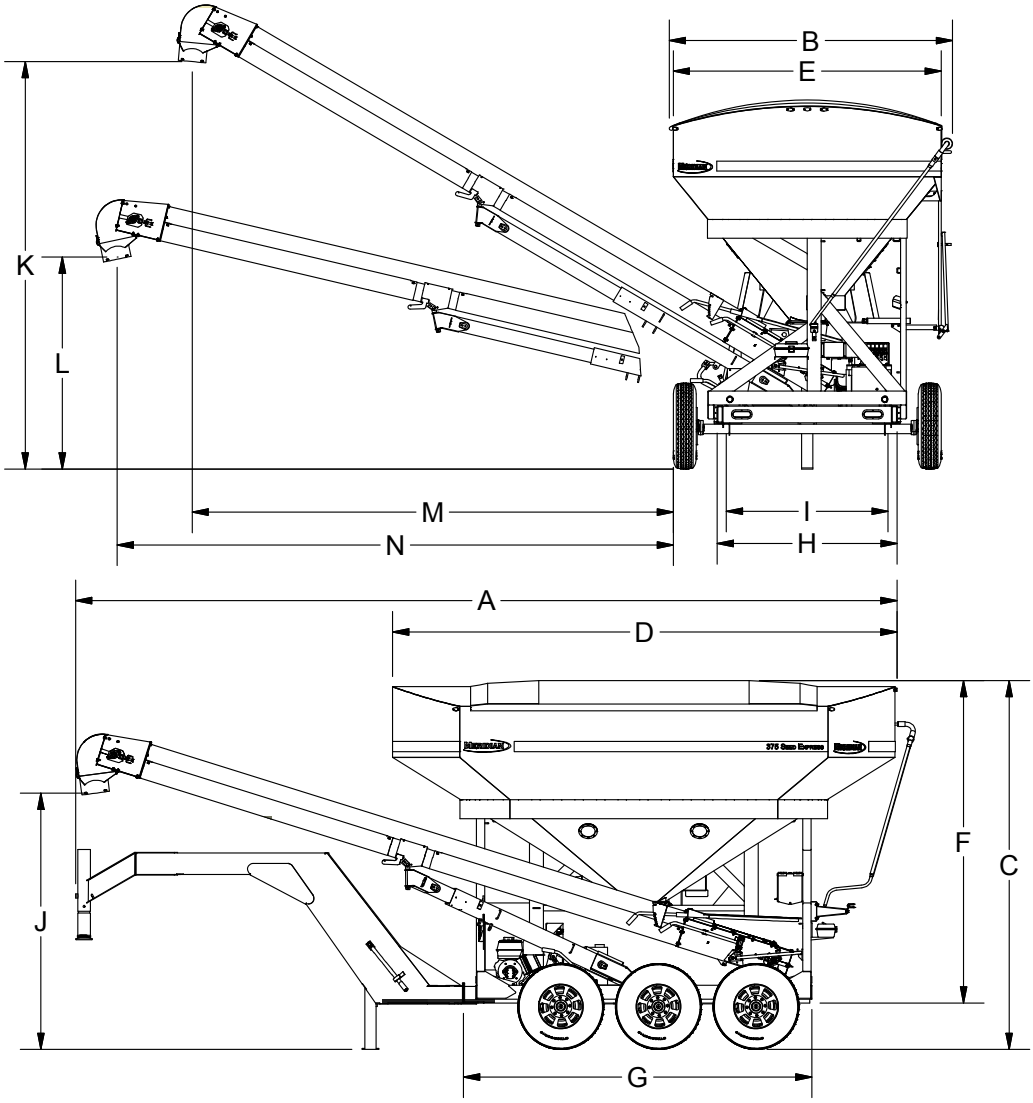

4.2 BOLT SPECIFICATIONS

⚠ WARNING

The torque value for bolts and capscrews are identified by their head markings. Replacing higher "Grade" bolts (Grade 8) with lower Grade bolts (Grade 5) will lead to equipment failure and can result in injury or death. Always use replacement bolts with the same Grade markings as the removed bolt.

4.2.1 Bolt Torque Values

Torque figures indicated above are valid for non-greased or non-oiled threads and heads unless otherwise specified. Therefore, do not grease or oil bolts or capscrews unless otherwise instructed in this manual. When using locking elements, increase torque values by 5%.

Bolt Diameter "A"	SAE Grade 2 N·m	(lb-ft)	SAE Grade 5 N·m	(lb-ft)	SAE Grade 8 N·m	(lb-ft)
1/4"	8	(6)	12	(9)	17	(12)
5/16"	13	(10)	25	(19)	36	(27)
3/8"	27	(20)	45	(33)	63	(45)
7/16"	41	(30)	72	(53)	100	(75)
1/2"	61	(45)	110	(80)	155	(115)
9/16"	95	(70)	155	(115)	220	(165)
5/8"	128	(95)	215	(160)	305	(220)
3/4"	225	(165)	390	(290)	540	(400)
7/8"	230	(170)	570	(420)	880	(650)
1"	345	(225)	850	(630)	1320	(970)

4.2.2 Grade Markings Chart

No Markings	**Grade 2** Low or medium carbon steel
3 Radial Lines	**Grade 5** Medium Carbon Steel, Quenched and Tempered
6 Radial Lines	**Grade 8** Medium Carbon Alloy Steel, Quenched and Tempered

5. MACHINE COMPONENTS AND CONTROLS

5.1 COMPONENT NOMENCLATURE AND LOCATION

The Meridian 275 DX or 375 DX Seed Express models are designed as bulk seed transfer units to transfer large amounts of seed into a planter or drill.

Large bulk seed containers are loaded into the seed tender compartments (1 & 2) using two methods. The seed can be dumped into one of two compartments from a seed box or other means. The seed tender can also load itself using its conveyor (23). The center-mounted conveyor (9) then transfers the seed from the compartments into planters or drills. Slide gates (24) on the compartments control the flow of seed into the conveyor.

A gasoline engine (12) mounted on the frame powers a hydraulic pump, which operates the hydraulic motor for the conveyor and the control cylinders (raise, lower, and rotate the conveyor; open and close the slide gates).

The conveyor is mounted on a pivoting platform (22) that rotates 135°. An optional spout on the end of the conveyor allows for convenient distribution.

(1) Compartment 1. (2) Compartment 2. (3) Roll Tarp and Open/Close Bar. (4) Seed Tender Frame. (5) Load Cell Electronic Unit. (6) Tool Box. (7) Control Panel and Wireless Remote Control (not shown). (8) Trailer. (9) Seed Pan and Pan Cover. (10) Conveyor in Planter Loading Position. (11) Delivery Spout.

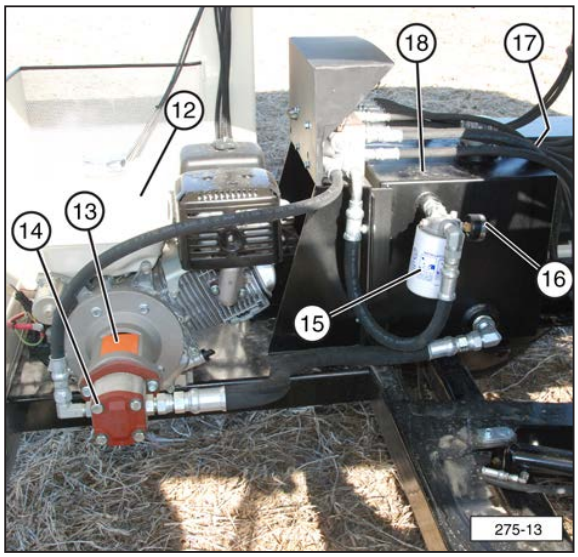

(12) Gasoline Engine to Power Hydraulic Pump. (13) Coupling (Engine to Pump). (14) Hydraulic Pump. (15) Hydraulic Oil Filter. (16) Dirty Filter Indicator. (17) Hydraulic Tank Oil Level Site Gauge. (18) Hydraulic Tank.

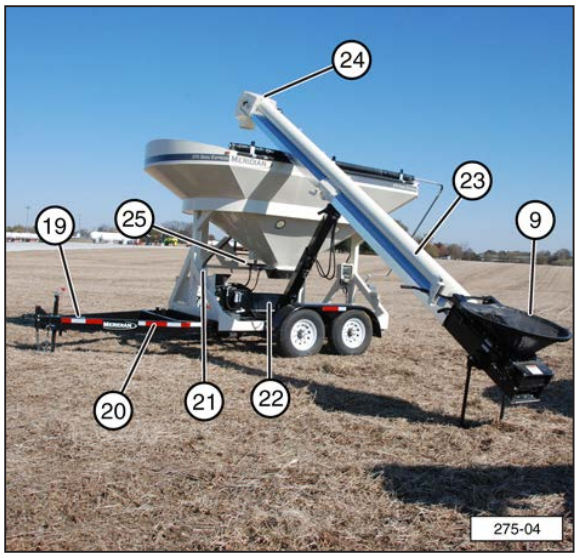

(9) Seed Pan. (19) Break-Away Trailer Brake System. (20) Trailer (Standard or Gooseneck). (21) Transport Lock (Field and Road). (22) Pivot Platform. (23) Conveyor in Self-loading Position. (24) Bin Slide Gates and Cylinders.

5.2 ENGINE AND CONTROLS

A Honda® engine is used with the unit. Always read the engine Operator's Manual supplied with the seed tender for the detailed operating procedures.

1. **Electrical System Key Switch (located in Control Box 7)**
   This key switch controls the power to the electrical system. Turn the key clockwise to turn the electrical system ON. The key must be in the ON position for the engine to start. Turn the key counterclockwise to stop the engine and turn OFF the electrical system.

2. **Engine Start Button (located in Control Box 7)**
   Press and hold this button until the engine starts. Also set the choke lever on the engine when starting the engine. Turn the key switch counterclockwise to turn OFF the engine.

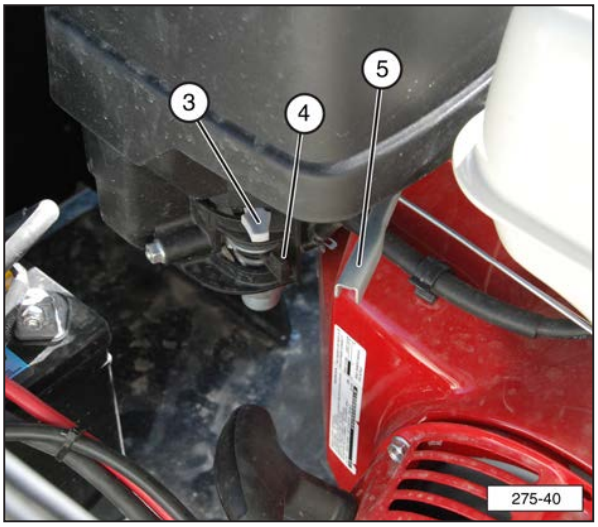

3. **Fuel Shut-Off Valve**
   Each engine is equipped with a valve between the fuel tank and the carburetor. Slide the fuel valve toward the block to turn ON and away for OFF. Turn the fuel OFF when not in use or before transporting.

4. **Throttle Lever**
   This lever controls the engine RPM. Move the lever laterally to increase or decrease the RPM. Always run at maximum throttle while operating.

5. **Choke Lever**
   The choke lever controls the fuel/air mixture to the engine. Close the choke when starting if the engine is cold. Open the choke as the engine warms. Always open the choke fully during operation.

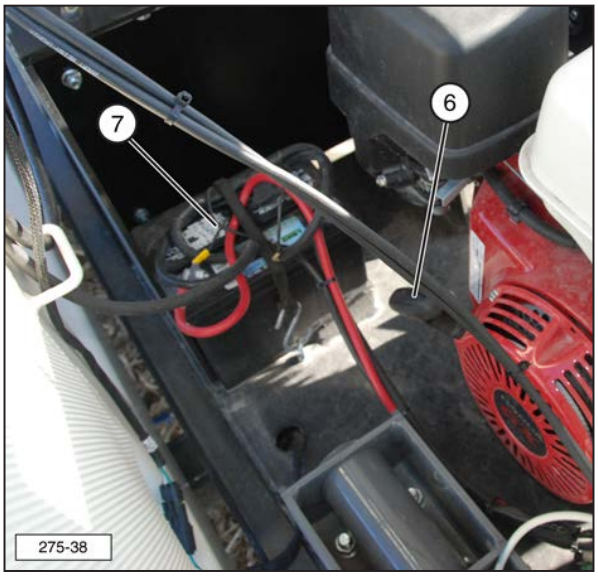

6. **Starting Rope**
   This retracting rope and T-bar is an optional method used to turn the engine over for starting. Grasp the T-bar firmly and pull the rope sharply to start the engine. Key on master control must be ON to pull-start.

7. **Battery (12 Volt)**
   A 12 Volt battery supplies the power to start the gasoline engine. When the engine is operating a trickle charge is sent to the battery to keep it fully charged.

5.3 CONTROL SYSTEM FUNCTIONS

The MEGA REMOTE system is a state-of-the-art microprocessor based Radio Frequency (RF) control system. It provides the operator the ability to operate the seed tender from the control panel or from the wireless handheld remote transmitter.

5.3.1 Control Functions

The controls on this panel are intended to be used only as a backup resource. All of the functions of the seed tender can more easily be controlled using the handheld remote transmitter.

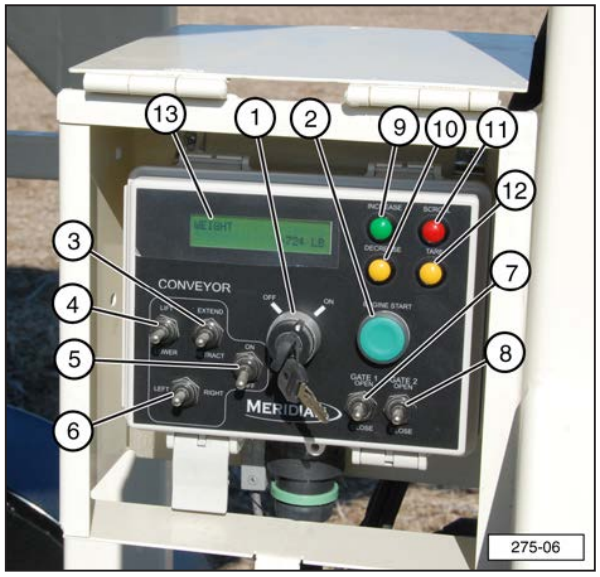

On/Off Key Switch (1)
This key switch controls the power to the electrical system. Turn the key clockwise to turn the electrical system ON. The key must be in the ON position for the engine to start or the handheld remote transmitter to function. Turn the key counterclockwise to turn OFF the electrical system.

Starting the Engine (2)
Press and hold this button until the engine starts. Also set the choke lever on the engine when starting the engine. Turn the key counterclockwise to turn OFF the engine.

Conveyor Lift and Lower (3)
This toggle switch raises and lowers the conveyor. Press the toggle switch UP to raise the conveyor. Press the toggle switch DOWN to lower the conveyor.

Conveyor Extend and Retract (4)
This toggle switch extends and retracts the conveyor. Press the toggle switch UP to extend the conveyor. Press the toggle switch DOWN to retract the conveyor.

Conveyor Start and Stop (5)
This toggle switch starts and stops the conveyor belt. Press the toggle switch UP to start the conveyor. Press the toggle switch DOWN to stop the conveyor.

Conveyor Swing Left and Swing Right (6)
This toggle switch positions the conveyor to the right or left. Press the toggle switch to the LEFT to position the conveyor towards the front of the unit. Press the toggle switch to the RIGHT to position the conveyor towards the rear of the unit.

Slide Gate 1 (7)
This toggle switch opens and closes the slide gate at the bottom of the compartment 1. Press the toggle switch UP to open the slide gate, and press the toggle switch DOWN to close the slide gate. The opening can be varied to provide the desired flow rate of seed onto the conveyor belt.

Slide Gate 2 (8)
This toggle switch opens and closes the slide gate at the bottom of compartment 2. Press the toggle switch UP to open the slide gate, and press the toggle switch DOWN to close the slide gate. The opening can be varied to provide the desired flow rate of seed onto the conveyor belt.

Increase (9)
Increases the weight when setting the Weight to Dispense function.

From the Main Display screen, to lighten the LCD display contrast press the Increase button.

Press and hold both the Increase and Decrease buttons simultaneously for ten seconds to enable or disable the display screen.

Decrease (10)
Decreases the weight when setting the Weight to Dispense function.

From the Main Display screen, to darken the LCD display contrast press the Increase button.

Press and hold both the Increase and Decrease buttons simultaneously for ten seconds to enable or disable the display screen.

Scroll (11)
Press the scroll button to scroll between the various display pages.
— Main Display screen (shows weight)

— Weight To Dispense screen (shows amount of seed that will be delivered to planter)

— Active Slide Gate screen

— Auto Reset screen

Tare (12)
To “Tare” or zero the scale when the receiver display is on the main display page showing the weight, press and hold the tare push button on either the remote transmitter or the receiver for three seconds. The display will then show the weight as zero.

LCD Display (13)
Turning key switch (1) to the ON position will turn the LCD backlight ON. It will stay on until the key is turned to the OFF position.

5.3.2 Setting the Weight to Dispense

1. Select the Weight To Dispense screen using scroll button (11).
2. Press and hold Tare button (12) for five seconds.
3. The first character of the weight will start blinking.
4. Use the Increase (9) or Decrease (10) buttons to select the appropriate number.
5. Use the Scroll button to move to the next digit. Use the Increase (9) or Decrease (10) buttons to select the appropriate number. Repeat this until the desired weight has been entered.
6. Finally, holding the Tare button for another five seconds to save the new weight.

NOTE: The weight of the seed is calculated when it is inside the compartments and as it flows through the slide gates. Any seed in the seed pan or the conveyor has already been weighed and does not affect the total weight.

5.3.3 Setting Active Slide Gate

1. Select the Active Slide Gate screen using scroll button (11).
2. Use the Increase/Decrease buttons to set the slide gate to either #1 or #2.
3. When the Auto Reset button is pressed on the remote transmitter, the slide gate selected will open automatically.

5.3.4 Auto Reset Function

1. Using the Weight To Dispense screen, select the desired weight of the seed to be delivered to the planter.
2. Using the Active Slide Gate screen, select either the compartment 1 (Slide Gate 1) or the compartment 2 (Slide Gate 2).
3. Press the Auto Reset button on the remote transmitter. The unit monitors the weight of seed being dispensed. As the weight approaches the desired Weight To Dispense, the slide gate will begin to close. If the weight stops changing too soon, the unit will open the slide gate slowly in order to get the desired amount.

5.3.5 Control System Compliance Information

This equipment has been tested and found to comply with the limits for a Class B digital device, pursuant to part 15 of the FCC Rules. These limits are designed to provide reasonable protection against harmful interference. This equipment generates radio frequency energy and if not installed and used in accordance with the instructions, may cause harmful interference to radio communications. However, there is no guarantee that interference will not occur in a particular installation. If this equipment does cause harmful interference to the reception of other electronics, which can be determined by turning the equipment off and on, DO NOT operate this equipment around those devices.

This equipment has been certified to comply with the limits for a Class B computing device, pursuant to FCC Rules. In order to maintain compliance with FCC regulations, shielded cables must be used with this equipment. Operation with non-approved equipment or unshielded cables is likely to result in interference to electronic device reception. The user is cautioned that changes and modifications made to the equipment without the approval of the manufacturer could void the user’s authority to operate this equipment.

5.4 WIRELESS REMOTE TRANSMITTER

Each radio remote transmitter is designed to operate with a unique radio ID code and RF channel sequence. Each receiver is programmed to respond only to the remote transmitter with the correct ID code/RF channel sequence for which it is set. This feature allows multiple systems to work in close proximity to one another without interference.

If the remote transmitter goes out of range for more than two seconds, all latched outputs will turn off as a safety feature.

In the event that a remote transmitter becomes damaged and a new one is needed, the receiver can be reprogrammed to respond to the new remote transmitter. Refer to the 10.1.2 Remote Control Transmitter and Receiver Synchronization section in the Maintenance section of this manual.

All of the normal functions of the seed tender can be controlled by the remote transmitter.

5.4.1 Functions of Keypad Buttons

Use the buttons on the keypad to operate the desired functions of the seed tender.

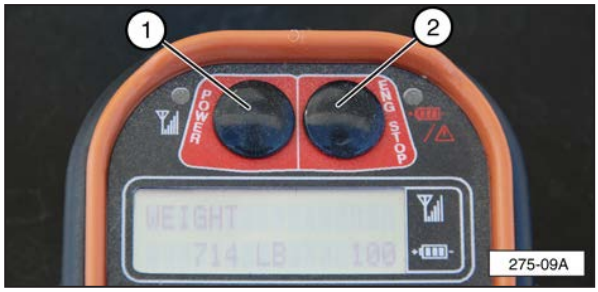

POWER (1)
Press Power button (1) to turn remote transmitter ON. Press and hold the button to turn it OFF.

To save battery life, the remote transmitter will automatically turn off when it is idle (no functions are used) for a period greater than 15 minutes. Press the POWER button to turn the unit ON.

NOTE: The remote transmitter will NOT automatically shut off as long as the receiver has power applied to it.

ENG STOP (2)
Press Engine Stop button to turn OFF engine.

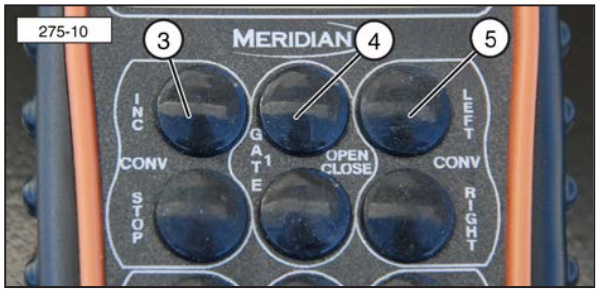

CONV (3)
The Conveyor button starts and stops the conveyor belt. Press the INC button to start the conveyor. Press STOP button to stop conveyor.

GATE 1 (4)
The Slide Gate 1 buttons open and close the slide gate at the bottom of compartment 1. Press the OPEN button to open the slide gate, and press the CLOSE button to close the slide gate. The opening can be varied to provide the desired flow rate of seed onto the conveyor belt.

CONV (5)
This Conveyor button positions the conveyor to the right or left. Press the LEFT button to position the conveyor towards the front of the unit. Press the RIGHT button to position the conveyor towards the rear of the unit.

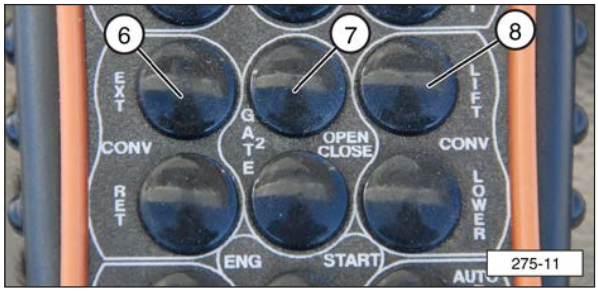

CONV (6)
This Conveyor button extends and retracts the conveyor. Press the EXT button to extend the conveyor. Press the RET button to retract the conveyor.

GATE 2 (7)
The Slide Gate 2 buttons open and close the slide gate at the bottom of compartment 2. Press the OPEN button to open the slide gate, and press the CLOSE button to close the slide gate. The opening can be varied to provide the desired flow rate of seed onto the conveyor belt.

CONV (8)
This Conveyor button raises and lowers the conveyor. Press the LIFT button to raise the conveyor. Press the LOWER button to lower the conveyor.

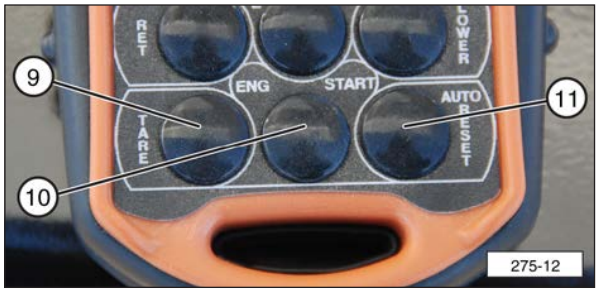

TARE (9)
The tare button will reset the scale to zero in order to measure only the content being added to one compartment without measuring the weight of the seed tender itself. This allows an exact measurement of the seed to be placed in the compartment.

ENG START (10)
Press the engine start button to start the engine. If the engine has not been started recently set the choke to ON.

AUTO RESET (11)
Press the AUTO RESET button on the remote transmitter to dispense the preselected Weight To Dispense seed out the selected slide gate. The slide gate must be preselected from the Active Slide Gate screen.

5.4.2 Display Panel

(1) Weight Displayed in Pounds. (2) Signal Strength. (3) Percentage of Battery Life.

5.4.3 Display Messages

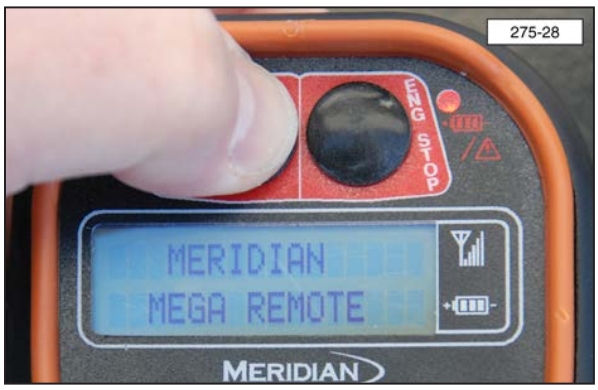

Pressing the POWER button turns the remote transmitter ON and displays the message "Meridian Mega Remote".

If the "NO LINK" message appears, the remote transmitter is not communicating with the control panel on the seed tender. Make sure the ON/OFF key switch is in the ON position.

The remote transmitter will display the WEIGHT of the seed in the seed compartments in pounds. It also displays the battery life of the two AA batteries in a percentage of remaining life.

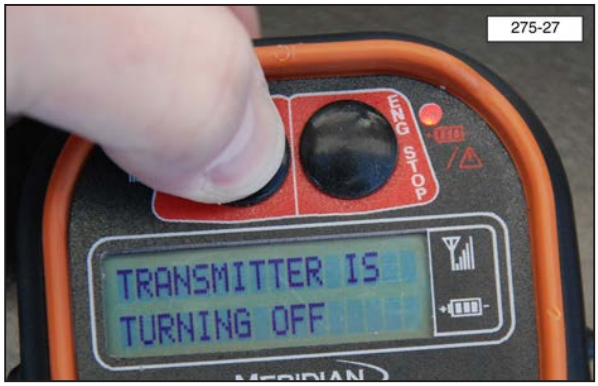

When the POWER button is pressed and held, the message "Transmitter is turning OFF" will be displayed.

6. PRE-OPERATING INSTRUCTIONS

6.1 MACHINE BREAK-IN PERIOD

A special break-in procedure has been developed to ensure the integrity of the seed tender when first put into service. Follow the Before Starting instructions and then follow the Inspections for 1/2, 5, and 10 Hours instructions at the appropriate interval.

After completing these instructions, follow the normal service schedule in the Maintenance section and engine manual.

6.1.1 Before Starting

1. Read and follow the instructions in the Honda® engine and the Meridian Operator's Manuals.
2. Review and follow Set-Up Instructions and the Pre-operation Checklist before starting machine.
3. Initially check wheel bolt torque and then again at 10, 25, and 50 miles. Refer to the Wheel Bolt Torque Requirements section in this manual for tightening instructions.
4. If needed, adjust the height of the hitch assembly. Refer to the appropriate hitch section in this manual for either the standard trailer hitch or the gooseneck hitch.

5. Start the engine and check the controls. Be sure that they function properly.

6.1.2 Inspections for 1/2, 5, and 10 Hours

Recheck machine fluid levels. Refill as required.

Recheck the tension and alignment of the delivery belt.

Recheck hardware and fasteners; frame to trailer tie-downs, all fasteners, and wheel bolts. Tighten to their specified torque.

At 10 hours, change the engine oil with the specified oil.

6.2 PRE-OPERATION CHECKLIST

Efficient and safe operation of the Meridian Bulk Seed Tender system requires that each operator reads and follows the operating procedures and all related safety precautions outlined in this section.

A pre-operational checklist is provided for the operator. It is important for both personal safety and maintaining the efficient operation of the delivery system that this checklist be followed.

Before operating the delivery system and each time thereafter, the following areas should be checked:

1. Lubricate the machine, as outlined and shown in the Grease/Lubrication Location Diagram in the Maintenance section of this manual. Follow the prescribed schedule.
2. Check the engine fluid levels, fuel, and crankcase oil. Add as required.

IMPORTANT

The engine warranty is void if the engine is run without oil.

3. Check hardware and fasteners; seed tender frame to trailer tie-downs, hitch bolts, trailer hitch to trailer bolts, and all other fasteners. Tighten to their specified torque.
4. Make sure the wheel bolt lug nuts are tight.
5. Check the tires and ensure that they are inflated to their specified pressure.
6. Remove all entangled material.
7. Visually inspect the conveyor and frame for damage.
8. Test the Break-Away brake unit and the trailer brakes.
   - Make sure the trailer brakes are operating properly.
   - Make sure the trip wire to the break-away switch is connected to the tow vehicle.
   - Make sure the pin is correctly installed in the break-away switch.
   - Press the Test button. The indicator should illuminate green. If the red light illuminates, the battery charge is low. Refer to the Break-Away System in the Maintenance section for instructions on charging the battery.
9. Check the fluid level in the hydraulic tank. Add fluid as needed.
10. Start the engine and check the filter status indicator. Replace the filter if indicated.
11. Check the tension of the delivery belt. Follow the instructions in the manual to correct the tension and/or alignment.
12. When the machine is operating, check the alignment of the delivery belt. Follow the instructions in the manual to correct the tension and/or alignment.

7. OPERATION

OPERATING SAFETY

- Make sure that anyone operating the seed delivery system or working on or around the unit reads and understands all the operating, maintenance, and safety information in the Operator's Manual.
- Keep all bystanders, especially children, away from the machine when loading or unloading is being done, or when authorized personnel are carrying out maintenance work.
- Establish a lock-out tag-out policy for the worksite. Be sure all personnel are trained in and follow all procedures. Lock-out tag-out all power sources before servicing the unit or working around loading/unloading equipment.
- Stop engine, remove ignition key, and wait for all moving parts to stop before servicing, repairing, adjusting, loading, filling, or unplugging.
- Keep working area clean and free of debris to prevent slipping or tripping.
- Do not allow riders on the trailer or frame when transporting.
- Keep hands, feet, hair, and clothing away from moving parts.
- Do not place hands, arms, or body between the seed box and frame or lid to prevent pinching or crushing. Components can move unexpectedly.
- Stay away from overhead power lines. Electrocution can occur without direct contact.
- Install and secure all guards before starting.
- Use care when climbing on frame or ladder to prevent slipping or falling.
- Do not smoke when refueling or working around machine.
- Fasten frame securely to trailer before transporting.
- Review safety related items annually with all personnel who will be operating, using, or maintaining the seed delivery system.

7.1 CONNECTING THE TRAILER

WARNING

To prevent serious injury or death from upending hazard, do not stand over hitch when unhooking the trailer from the tow vehicle. Load or fill compartment 1 first to keep weight on the hitch. Unload or empty compartment 2 first to keep weight on the hitch.

7.1.1 Bumper Hitch

1. Complete the Pre-operation Checklist.

CAUTION

Ensure that all bystanders, especially small children, are clear of the working area. Ensure there is enough room and clearance to safely back up to the machine.

2. Use the trailer jack to lift the hitch above the height of the receiver on the tow vehicle (standard hitch assembly shown).

3. Slowly back the tow vehicle until the hitch and ball are aligned.

4. Lower the hitch onto the ball.

5. Raise the jack and place it in its stowed position.

6. Release the latch to lock the hitch around the ball and install the retainer clip to secure the connection.

7. Attach the safety chain securely to the truck frame to prevent unexpected separation. Cross the chains when attaching.

8. Connect the wiring harness for the lights and brakes.

9. Connect the break-away system cable to the tow vehicle.

10. Route all the cables in a manner that will prevent snagging. Be sure to provide slack for turning.

7.1.2 Gooseneck Hitch

1. Adjust the trailer jack to set the trailer in a level position.

⚠ WARNING

Crush Hazard. The adjustable height tube in Step 2 is very heavy and can cause severe injury if it falls free. Once the lock bolt is loosened and the hitch pin is removed, the tube is free to fall to the ground if not properly supported.

2. Loosen lock bolt (1) on the adjustable height tube. Remove the keeper pin (2) and remove the tube lock pin (3).

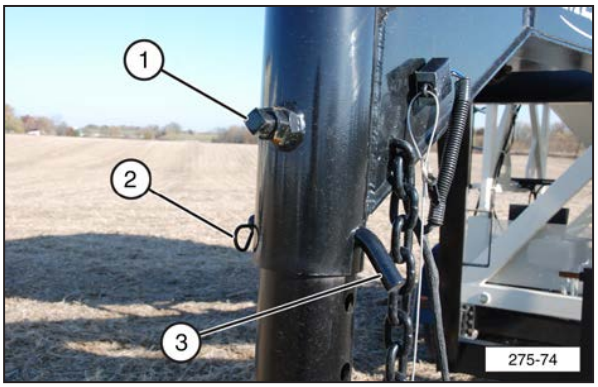

3. Adjust the tube height for the tow vehicle which would keep the trailer in a level position.

4. Reinstall the pin and keeper. Tighten the tube lock bolt.

5. Raise the gooseneck ball hitch to go over the lowered tailgate of the tow vehicle and to clear the height of the gooseneck ball.

6. Open the clamp latch on the gooseneck coupler.

7. Position the trailer's coupler directly over the ball in the bed of the tow vehicle.

8. Lower the gooseneck trailer into position and latch the clamp.

9. Attach the safety chains.

10. Connect the trailer light wiring to your vehicle's connector and check all of your lights, including your brake lights.

11. Completely raise the trailer jack to the storage/ transport position.

7.2 OPENING AND CLOSING ROLL-UP TARP

1. Remove the retaining pin from the crank holder. Using both hands, carefully remove the crank from the holder.

2. Extend the crank handle assembly to a comfortable operating position.

3. Roll the tarp to the fully opened position.

4. Place the crank back in the holder and reinsert the pin.

7.3 OPERATION

7.3.1 Loading (Filling the Seed Tender)

This Operation section provides a step-by-step procedure for first loading seed into the seed tender using the conveyor at the farm and then unloading it in the field.

1. Before loading seed, make sure the two slide gates are in the closed position.

2. Open the roll-up tarp.
3. The seed compartments can be loaded from a storage box, storage bag, or other means directly into the seed tender. If these loading methods are not available, continue with this procedure.
4. Remove the lock pin from the road transport or field transport location. Store the pin in a safe location.

5. Remove the protective cover from the seed pan.

6. Remove the two retainer lock pins and store them in a safe location.

7. Turn key switch (1) to the ON position.

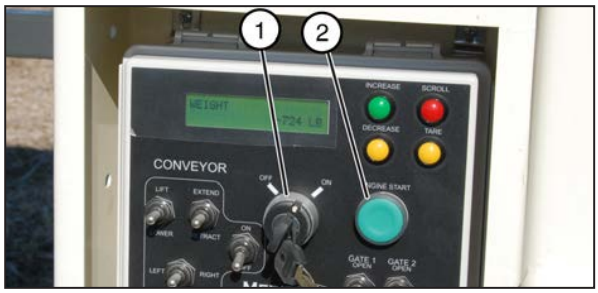

8. Move fuel valve lever (4) to the ON position (toward the front of the machine).

9. To start a cold engine, move choke lever (3) to the CLOSED position (toward the back of the machine).

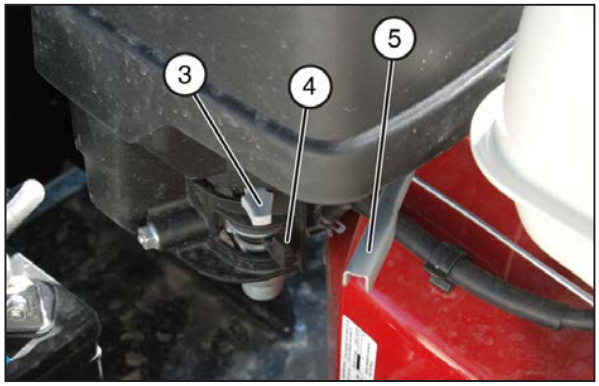

10. Start the engine and move throttle lever (5) to run the engine at full speed.

11. Slightly raise the conveyor out the storage cradle. Also, extend the conveyor to release the lock mechanism.

NOTE: This lock prevents the conveyor from rotating independent of the swing arm. If the lock is not released, the conveyor cannot be placed in a loading position.

12. Use the seed pan handle to raise the conveyor out of the storage position.

13. Use the Conveyor Right button on the remote transmitter to swing the conveyor into a loading position, as shown.

14. If desired, release the stand lock pin and rotate the it downward. Engage the lock pin when the stand is fully extended.

15. Pull the outside of the seed pan handle and position the seed pan, as desired. Lock the handle into place at the desired height.

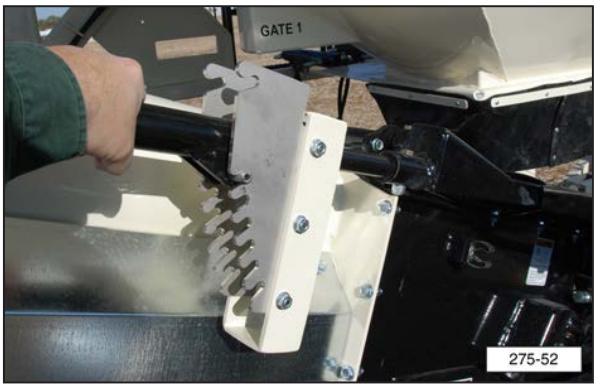

⚠ CAUTION

To prevent personal injury, do not use the conveyor if the guard has been removed.

⚠ CAUTION

Always load compartment 1 first to maintain a positive tongue weight. Negative tongue weight can cause the hitch to rapidly swing upward if not securely fastened to the tow vehicle, which can result in personal injury.

16. Start the conveyor. Refer to section 5.3 for setting automatic seed delivery functions.
17. Allow seed to flow into the conveyor and fill the seed tender.
18. When the seed tender is filled, stop the conveyor.
19. Reposition the conveyor into the transport position and reinstall all lock pins.
20. Move the seed tender to the location of the planting equipment following all safe towing practices.

NOTE: Two sample slide gates, one in each compartment, are used to retrieve samples of the seed from the compartment.

7.3.2 Unloading (Filling the Planter)

⚠ CAUTION

Always unload compartment 2 first to maintain a positive tongue weight. Negative tongue weight can cause the hitch to rapidly swing upward if not securely fastened to the tow vehicle, which can result in personal injury.

1. Before unloading, shut off engine on the tow vehicle, set the parking brake, and remove the ignition key.
2. Remove the lock pin from the road transport or field transport location. Store the pin in a safe location.

3. Remove the protective cover from the seed pan.
4. Remove the retainer lock pin from the stand and store it in a safe location.

5. Turn the key switch to the ON position.
6. Move the fuel valve lever to the ON position (toward the front of the machine).
7. To start a cold engine, move the choke lever to the CLOSED position (toward the back of the machine).
8. Start the engine and move the throttle lever to run the engine at full speed.
9. Slightly raise the conveyor out of the storage cradle.
10. Extend and rotate the conveyor to place the seed pan under the seed compartment slide gates.

11. Position the seed pan to prevent spillage of seed. Make sure the handle is locked into the desired position before opening the seed compartment slide gates.

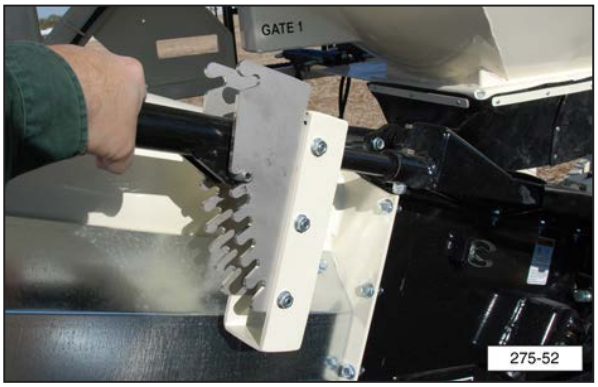

12. Manually start the conveyor or use the Auto Reset feature on the remote transmitter to automatically dispense a preselected amount of seed. Refer to section 5.3.4 Auto Reset Function for instructions.

13. If operating manually, open the slide gate with the wireless remote transmitter or the seed tender control panel for the desired seed flow.

14. If necessary, when the planter is filled, close the slide gate and then stop the conveyor belt.

15. Return the conveyor to the transport position and install the retaining clips and lock pins.

    If the seed tender is being moved within a field location, place the conveyor in the Field Transport position and install the lock pin. If the seed tender will be travelling on the road, place it in the Road Transport position and install the lock pin.

16. If necessary, close the roll-up tarp and secure the handle in the storage position.

8. STORAGE

8.1 GENERAL INFORMATION

After planting or when the machine will not be used for a period of time, completely inspect all major systems of the seed tender. Replace or repair any worn or damaged components to prevent unnecessary downtime at the beginning of the next season.

IMPORTANT

To prevent component damage, store the seed tender in a dry, level area. If the seed tender is not attached to a trailer, support the frame with planks to raise the unit off the ground.

8.2 PLACING IN STORAGE

⚠ CAUTION

Store the unit in an area away from human activity. To prevent the possibility of serious injury, do not permit children to play on or around the stored machine.

1. Remove all seed from the seed tender.
2. Place the gasoline engine fuel valve in the OFF position.
3. Thoroughly wash the machine with a pressure washer or water hose to remove all dirt, mud, or debris.
4. Inspect rotating parts for entangled material. Remove all entangled materials.
5. Check the condition of the conveyor belt. Replace or adjust, as required.
6. Check the condition of the hydraulic pump to engine shaft connectors and spider. Replace or adjust, as required.
7. Touch up paint nicks and scratches to prevent rusting.
8. Remove the ignition key and store in a secure place.
9. Remove the battery and store it in a cool, dry area on wooden blocks or a wooden pallet. Charge it monthly to maintain an adequate charge.
10. It is best to store the machine inside and if that is not possible, cover with a waterproof tarp and tie down securely.

8.3 REMOVING FROM STORAGE

When removing the machine from storage, follow this procedure:

1. Remove the tarp, if covered.
2. Install and connect the battery.
3. Review and follow the Pre-Operation Checklist.
4. Review and follow the Service Checks in the Maintenance section.

IMPORTANT

If the machine has been stored for more than twelve months, warm the engine by running it for two to three minutes and drain the oil. Change the oil while the oil is warm to remove any condensation. Refer to the Engine Oil Change in the Maintenance section.

9. MAINTENANCE

MAINTENANCE SAFETY

- Good maintenance is your responsibility.
- Follow good shop practices.
  - Keep service area clean and dry.
  - Be sure electrical outlets and tools are properly grounded.
  - Use adequate light.
- Make sure there is plenty of ventilation. Never operate the engine in a closed building. Exhaust fumes may cause asphyxiation.
- Before working on this machine, shut OFF the engine, and remove the ignition keys.
- Never work under equipment unless it is securely blocked.
- Always use personal protection devices, such as eye, hand, and hearing protectors when performing any service or maintenance.
- Where replacement parts are necessary for periodic maintenance and servicing, genuine factory replacement parts must be used to restore your equipment to the original specifications. The manufacturer will not be responsible for injuries or damages caused by use of unapproved parts and/or accessories.
- A fire extinguisher and first aid kit should be readily accessible while performing maintenance on this equipment.
- Periodically tighten all bolts, nuts, and screws and check that all cotter pins are properly installed to ensure the unit is in a safe operating condition.
- When completing a maintenance or service function, make sure all safety shields and devices are installed before placing unit in service.

9.1 GREASING

Use the Service Checks information in the Maintenance section to keep a record of all scheduled maintenance.

1. Use an SAE multi-purpose high temperature grease or a multi-purpose lithium base grease.
2. Use only a handheld grease gun for all greasing. An air-powered greasing system can damage the seals on bearings and lead to early failures.
3. Wipe grease fitting with a clean cloth before greasing to avoid injecting dirt and grit.
4. Replace and repair broken fittings immediately.
5. If fittings will not take grease, remove and clean thoroughly. Also, clean lubricant passageway. Replace fitting if necessary.

9.2 GREASE FITTING LOCATIONS

Both the rotate and lift cylinders are equipped with grease zerks on each end; four grease zerks total.

Each axle is equipped with a grease zerk under the center dust cap; four or six total depending on the model.

10. SERVICE PROCEDURES

10.1 REMOTE CONTROL UNIT

The remote transmitter unit is powered by two AA batteries. The display window on the remote transmitter indicates the remaining battery life. When batteries are new, the display indicates 100% power. As the remote transmitter is used, the power decreases. When red indicator light (2) turns ON, the batteries should be replaced immediately, or discontinue the use of the remote transmitter.

10.1.1 Battery Replacement Tips

- Check the batteries at least every six months (for low Voltage, leakage, etc.).
- Always use the correct size and type of battery. Replace old batteries with new 1.5 Volt AA, alkaline batteries.
- Always replace both batteries at the same time.
- Do not mix types, brands, or ages of replacement batteries.
- Do not install the batteries backwards. Make sure you insert the batteries with the + (plus) and – (minus) terminals aligned correctly.
- Remove the batteries from the controller if not expected to be in use for several months.
- Do not attempt to recharge a battery unless it is specifically marked “rechargeable.”
- Dispose of old batteries properly.

10.1.2 Battery Replacement

1. Remove the two Phillips head screws from the cover on the back of the unit.
2. Replace the batteries, making sure they are correctly positioned.

10.1.3 Remote Control Transmitter and Receiver Synchronization

To reprogram the ID code to the receiver, use the following procedure.

NOTE: Do not interrupt this procedure before it has completed or the system may not operate correctly.

1. Turn the remote transmitter and receiver OFF.
2. Press and hold the POWER button on the handheld remote transmitter for more than ten seconds. The LCD display will indicate when to apply power to the receiver.
3. When directed, apply power to the receiver. Green LED stays on constantly when reprogramming is in progress.
4. When the process is completed, the green LED will blink on and off. Test the remote transmitter to make sure it functions properly.

10.2 HYDRAULIC SYSTEM

10.2.1 Hydraulic Oil Change

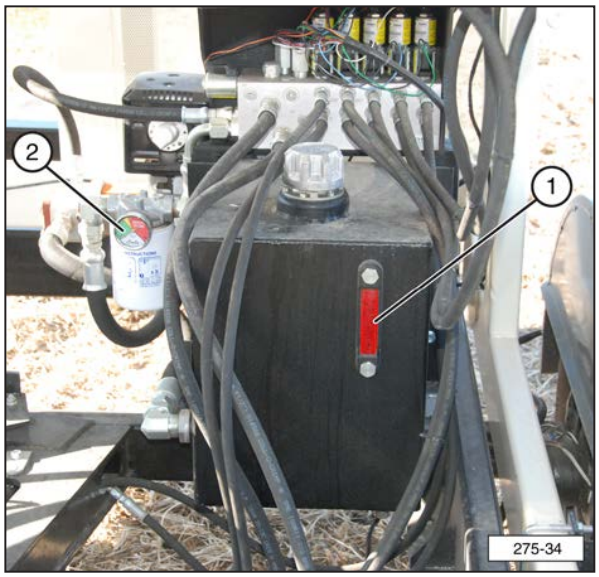

An oil and filter change is recommended annually or every 400 hours of operation using an AW HVI Hydraulic ISO 32 oil.

IMPORTANT

Never run the hydraulic pump unless the hydraulic oil tank is full (indicated in sight level gauge).

1. Place a large waste oil container under the inlet hose. The hydraulic tank holds approximately ten gallons of oil.
2. Drain the hydraulic tank by removing the inlet hose from the pump. Allow the tank to drain completely.
3. Remove and replace the oil filter. Apply a thin coat of oil to the rubber seal of the new oil filter. Hand-tighten only.
4. Reconnect the inlet hose to the pump.
5. Fill the tank to the fill line at the top of the gauge with approximately ten gallons of AW HVI Hydraulic ISO 32 oil. Replace the cap.
6. Start the engine and cycle all the cylinders several times.
7. Recheck the oil level in the tank and add as needed.

10.2.2 Hydraulic Pressure Relief Valves

IMPORTANT

There are two pressure relief valves (1 and 2) which have been factory preset for the most efficient operation of the seed tender. **DO NOT** adjust these relief valves. If the unit is not operating properly, refer to the Troubleshooting section, call an authorized dealer, or call the factory.

10.2.3 Hydraulic Motor Coupling

Changing the pump coupling does not require the hydraulic tank to be drained. If the pump must be disconnected, drain the hydraulic tank and be prepared to catch any oil that remains in the two hydraulic hoses.

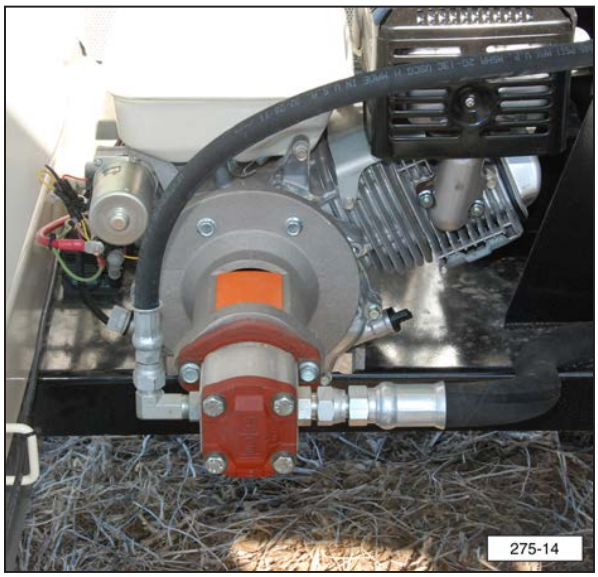

1. Remove the orange protective cover from the adapter assembly.
2. Remove the two pump mounting bolts.
3. Pull the pump away from the adapter to separate the coupling halves.

4. Loosen the setscrews in each coupling half and remove the old couplings.
5. Install new couplings on the engine shaft and the pump shaft. When completely assembled, the shaft length in each coupling half should be the same. Tighten the pump end setscrews to 78 to 87 lb-in. Do not tighten the engine shaft coupling at this time.
6. Place the urethane spider in the pump coupling. Align and install the pump and pump coupling.
7. Tighten the pump bolts to a “Grade 5” bolt toque for that size of bolt. Refer to the 4.2 Bolt Specifications section.
8. Slide the engine coupling against the other coupling half and tighten the setscrew.
9. Replace the orange protective cover.

NOTE: If the adapter plate was removed, tighten the four retaining bolts to “Grade 5” bolt torque for that size of bolt.

10.3 ENGINE

For any questions concerning the Honda® engine not provided in this manual, refer to the OEM manual that was provided with the seed tender.

To contact Honda®, refer to the OEM Literature section in this manual.

10.3.1 Approved Fuel

Use a regular unleaded automotive gasoline for all operating conditions. The fuel tank capacity is 1.0 liter (2.1 US pints).

10.3.2 Engine Oil

Use a typical SAE 10W-30 or 10W-40 multi-viscosity motor oil for normal operating conditions. Consult your engine manual for the recommended oil in cold temperatures. The crankcase capacity is 1.1 liters (1.16 US qt.).

10.3.3 Change Engine Oil

1. Review the Operator’s Manual for the engine.
2. Allow the engine to cool before changing oil. Draining works best when oil is warm.

⚠ CAUTION

Burn Hazard. Hot engine oil can burn skin.

3. Be sure the engine key switch is in the OFF position and the fuel valve is turned OFF.

4. Place a pan under the drain plug.
5. Remove the drain plug and allow oil to drain for ten minutes.
6. Reinstall the engine drain plug and tighten.
7. Dispose of the oil in an approved container. Follow industrial disposal regulations.
8. Fill the engine with SAE 10W-30 oil for general usage. If the engine is operated in more extreme conditions, refer to the OEM manual for oil recommendations.
9. Run the engine for one minute and recheck the oil level. Add oil as needed.

10.3.4 Clean Air Cleaner

Check the air cleaner daily before each usage. Clean it every three months or 50 hours of operation (clean it more frequently when used in dusty conditions).

10.4 LOAD CELLS

Four load cells are used with the weighing system. There is no maintenance required for these load cells. If the seed tender does not seem to be functioning correctly, refer to the Troubleshooting section, call an authorized dealer, or call the factory.

10.4.1 Wiring Connections to Scale Box

All four load cells are connected to the scale box. If the system is not working correctly, make sure the wiring connections are securely attached to the back of the scale box. If the problem continues, contact Meridian.

10.5 BELT DELIVERY TUBE

10.5.1 Unplugging

If the conveyor becomes plugged, follow this procedure:

1. Position the conveyor with easy access to both ends.
2. Stop the engine and remove the ignition key. Place a lock-out tag on the control box to prevent accidental starting of the conveyor.
3. Open the lower access door at the bottom of the conveyor and/or open the delivery spout cover.

4. Remove obstruction.
5. Close and secure the lower access door and delivery spout cover.

10.5.2 Belt Tension Adjustment

1. Loosen the locknut on each side of the belt tension mechanism.
2. Tighten the two adjusting bolts equally to 23 lb-ft. While holding the adjusting bolt in place, retighten both locking nuts.
3. Start the conveyor and make sure the belt is tracking in the center of the drive drum. If the belt is not tracking properly, use the Belt Tracking Adjustment procedure to correct the problem.

IMPORTANT

The drive drum at the bottom of the conveyor must be square (drive shaft must be equal distance from end of unit) for the belt to track properly.

10.5.3 Belt Tracking Adjustment

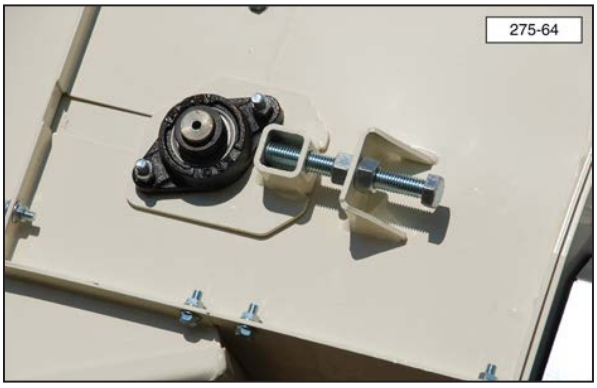

1. Loosen the locknuts on the adjusting bolt.
2. Tighten or loosen the bolt to correct the tracking problem.
3. Place both locking nuts on either side of the lock plate and tighten the locking nuts together.
4. Start the conveyor and make sure the belt is tracking in the center of the drive drum. Readjust if needed.

10.5.4 Belt Replacement

If the belt is unbroken, use the old belt to thread the new belt into the delivery tube.

1. Remove the two wing nuts and remove the cover plate.

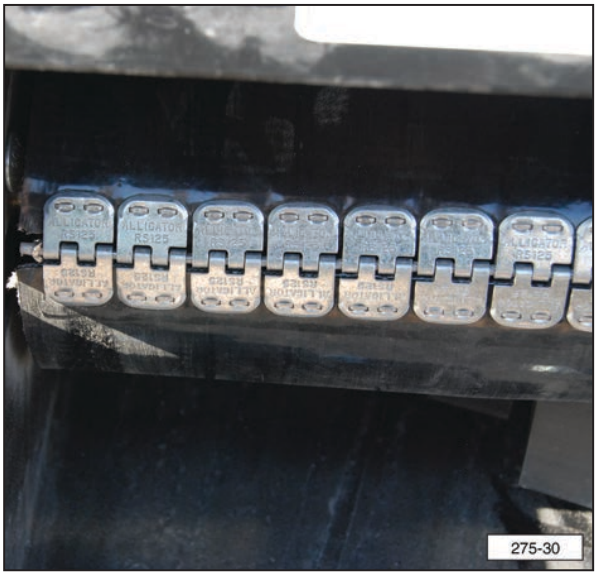

2. Loosen the lower drive drum adjusting bolts to their loosest position.
3. Disconnect the two ends of the conveyor belt.
4. Attach the replacement belt to the end of the old conveyor belt.
5. Slowly pull the old belt out of the delivery tube and thread the new one into position.
6. Disconnect the old belt and connect the ends of the new belt together.
7. Readjust the belt tension.
8. Start the conveyor to make sure the belt is tracking properly.
9. Recheck the tension and alignment of the belt frequently during the first ten hours of operation and adjust as needed.

NOTE: Then, resume regular maintenance. Typically a belt will seat itself during the first ten hours of operation and then require less or no adjustment.

10.6 TRAILER BREAK-AWAY SYSTEM

10.6.1 Testing the Battery

1. Disconnect the trailer plug from the tow vehicle; otherwise, you are testing the tow vehicle's battery.

2. Press the green TEST button on the control box located inside the frame of the trailer. The green indicator light should illuminate if the battery is fully charged. If the yellow or red indicator lights illuminate, the unit's battery should be charged before towing the trailer.

IMPORTANT

If the battery is weak or dead (red indicator, even after charging), as indicated by the indicator light, the battery must be replaced.

3. Plug the trailer into the tow vehicle. The yellow "Charging" light should be ON.

4. Test the system by pulling the pin out of the break-away switch. The battery will activate the brakes. (**Note**: Do not use this kit as a parking brake). The battery should be charged and tested prior to each trailer outing.

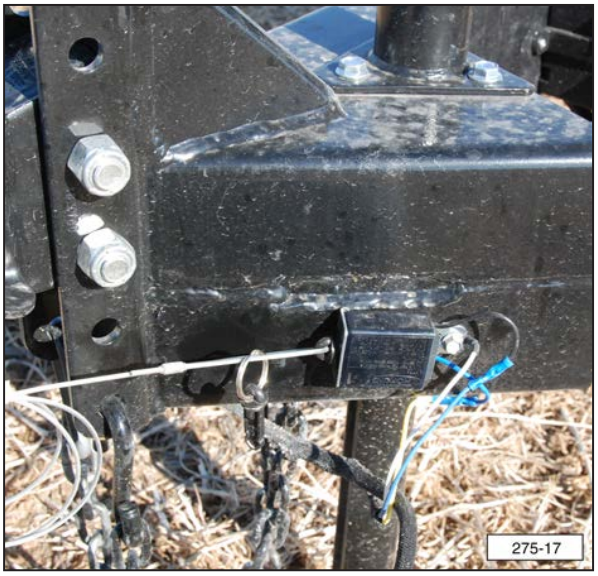

10.6.2 Changing Battery

The battery in the break-away system is rechargeable, but not replaceable. If the battery will not hold a charge, replace the unit.

10.7 WHEEL BOLT TORQUE REQUIREMENTS

1. Initially check the wheel bolt torque at 10, 25, and 50 miles and after each wheel removal. Refer to the Wheel Bolt Torque Requirements section in this manual for tightening instructions.

NOTE: Torque wrenches are the best method to ensure the proper amount of torque is being applied to a wheel nut.

⚠ CAUTION

To prevent injury due to possible dangerous separation of wheels from the axle, the wheel nuts must be maintained at the proper torque levels. Properly maintained wheel nuts prevent loose wheels and broken studs.

2. Tighten the wheel nuts in three stages.
   — First stage: 20 to 25 foot pounds.
   — Second stage: 50 to 60 foot pounds.
   — Third stage: 90 to 120 foot pounds.

3. Tighten the wheel nuts in a clockwise, cross-axle alternating pattern.

10.8 TRAILER HITCH BOLTS

The front hitch section of the seed tender is bolted to the trailer frame. This design allows the same trailer to use either a standard hitch assembly or a gooseneck trailer hitch. These hitch assemblies are interchangeable, if needed.

Check the torque on the trailer hitch bolts at least once per year. Tighten the bolts to 115 lb-ft.

10.9 SERVICE RECORD CHART

The chart on the following page should be copied and filled out as maintenance is performed on the machine. Refer to the Lubrication, Maintenance, and Service sections for additional instructions.

10.9 SERVICE RECORD CHART (CONTINUED)

Date														
Serviced by														
8 hours or daily														
Check Engine Fluid Levels														
Check Hydraulic Tank Oil Level														
Test Break-Away Brake System														
Inspect Tires														
Check Remote Control Battery Life														
Check Oil Filter Indicator														
Check Conveyor Belt Tension and Alignment														
50 Hours or Weekly														
Clean Engine Air Intake Filter														
Check Tire Pressure														
Check Conveyor Belt Tension and Alignment														
Clean remote transmitter regularly with a damp cloth and mild detergent.														
200 Hours or SEMI/ANNUAL														
Adjust Brakes														
Inspect Brake Magnets														
400 hours or annually														
Change Engine Oil														
Check Wheel Bolt Torque														
Check Frame and Trailer Hold-Downs														
Check Hydraulic Motor Coupling														
Check Conveyor Tube Slide Plates														
Check Turntable Nylon Slide Blocks														
Check Load Cells														
Inspect Brake Lining Wear, Brake Cylinder, and Brake Wiring														
Grease Wheel Bearings and Check Hub for Wear														
Inspect Axle Grease Seal														
Inspect Springs for Wear														
Inspect transmitter electrical wiring for wear points or other damage. Repair as required.														
Inspect all electrical wiring connections for looseness or corrosion. Tighten and/or seal as necessary.														
Thoroughly Clean Machine														

10.10 SERVICE CHECKS

10.10.1 Daily (8 Hours)

WARNING

Gasoline is a highly combustible fuel. Improper use, handling, or storage of gasoline can be dangerous. Never touch or fill a hot engine. DO NOT fill the engine's fuel tank near an open flame while smoking or while engine is running. DO NOT fill tank in an enclosed area with poor ventilation. Wipe up spills immediately.

1. Check engine oil level and fill as needed.
2. Check engine fuel level and fill as needed.
3. Check hydraulic fluid level (1) and fill as needed.

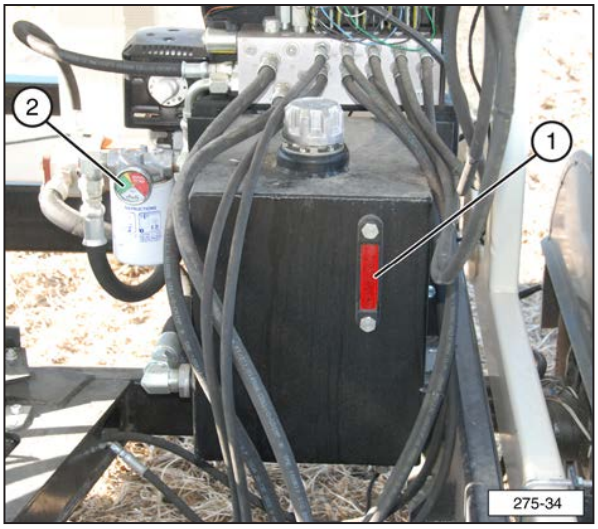

4. Check the filter life indicator. Change the filter if the indicator needle is in the yellow or red area.

5. Test trailer break-away system. Refer to section 10.5 in this manual.
6. Initially check wheel bolt torque at 10, 25, and 50 miles. Refer to 10.6 Wheel Bolt Torque Requirements section in this manual for tightening instructions.
7. Check remote transmitter battery life and change them, if needed. Refer to section 10.1 in this manual for additional information.
8. Check delivery belt for proper tracking. Refer to section 10.5.2 on adjusting the belt in this manual.

10.10.2 Weekly (50 Hours)

1. Change engine oil.
2. Clean or change engine air filter.

3. Check the tension on the delivery belt. Adjust tension if needed. Refer to section 10.5.2 in this manual for instructions.
4. Check tire pressure. Inflate the tires to the recommended pressure stated on the tire.

10.10.3 Annually (400 Hours)

1. Check wheel bolt torque. Refer to 10.6 Wheel Bolt Torque Requirements section in this manual for tightening instructions.
2. Check frame and trailer hold-down bolts.
3. Check hydraulic motor to engine shaft coupling and spider. Refer to the Changing Hydraulic Motor Coupling section for instructions.
4. Check the nylon slide plates between the conveyor sections.
5. Check turntable nylon slide blocks.
6. Thoroughly clean the seed tender.
7. Check the tires for wear, and replace if needed.

10.11 AXLE MAINTENANCE

10.11.1 First 200 Miles

1. Adjust brakes. Refer to OEM manual for procedure.

10.11.2 3,000 Miles or 3 Months

1. Adjust brakes. Refer to OEM manual for procedure.
2. Check torque on wheel nuts. Refer to the section in this manual.
3. Inspection tires for wear. Refer to OEM manual for procedure.

10.11.3 6,000 Miles or 6 Months

1. Inspect brake magnets for wear. Refer to OEM manual for procedure.
2. Inspect suspension parts for wear. Refer to OEM manual for procedure.

10.11.4 12,000 Miles or 12 Months

1. Inspect brake lining wear, check brake cylinder for leaks, and inspect brake wiring for damage. Refer to OEM manual for procedure.
2. Grease the wheel bearings and check the hub for wear. Refer to OEM manual for procedure.
3. Inspect grease seal for leakage. Refer to OEM manual for procedure.
4. Inspect springs for any wear or loss of arch. Refer to OEM manual for procedure.

10.12 TIRES

Check the tires for normal and/or abnormal tire wear. Replace tires that are damaged or worn beyond normal tread life. Refer to the axle OEM manual for a Tire Wear Diagnostic Chart.

Replace the tires with Meridian part number 18131
or an equivalent tire:
3T235/80R16
TR643
Load Range E
For Trailer Service Only

11. OEM LITERATURE

11.1 HONDA® ENGINE

For any questions concerning the Honda® engine, refer to the OEM manual that was provided with the seed tender.

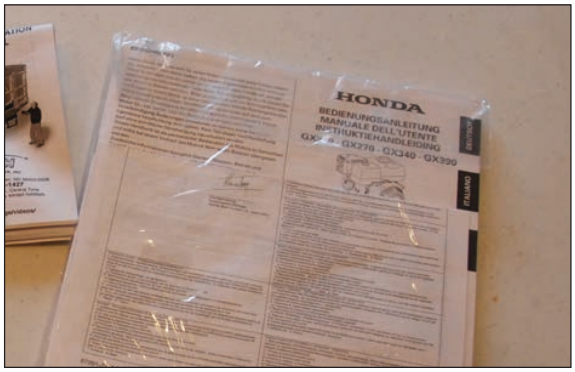

Additional information can be obtained from:

United States Power Equipment Division
Customer Relations Office
4900 Marconi Drive
Alpharetta, GA 30005-8847
(770) 497-6400

Honda® Canada, Inc.
715 Milner Avenue
Toronto, ON M1B 2K8
(888) 946-6329

11.2 RETRACTABLE COMPARTMENT TARP

For any questions concerning the Agri-Cover, refer to the OEM manual that was provided with the seed tender.

Three decals are also provided showing the correct operation and maintenance for the tarp. Attaching these decals is the responsibility of the purchaser.

Additional information can be obtained from:
ACI Agri-Cover
PO Box 508
Jamestown, ND 58402

Phone: (866) 414-5422
Fax: (701) 251-1512
customerrelations@agricover.com

11.3 AXLE

For any questions concerning the Axis Products axle, refer to the OEM manual that was provided with the seed tender. An Owner's Manual and parts listing is provided with the seed tender.

Additional information can be obtained from:
Axis Products, Inc.
3403 Reedy Drive
Elkhart, IN 46514
Phone: (574) 266-8282

12. TROUBLESHOOTING

12.1 TROUBLESHOOTING CHART

PROBLEM	CAUSE	SOLUTION
Engine will not start.	No fuel.	Fill the fuel tank.
	Low engine oil.	Fill the crankcase with oil.
	Cold engine.	Open choke.
	Ignition key switch off.	Turn ignition key switch on.
	Battery dead.	Recharge or replace battery.
	Engine problem.	Refer to engine manual.
Conveyor belt will not start.	No power.	Start engine and increase speed above 1400 RPM.
	Drive motor coupling.	Repair or replace coupling.
	Belt tension.	Increase belt tension.
	No hydraulic oil.	Check oil level.
Electrical or hydraulic functions are not working properly.	Transmitter power is OFF.	Turn Power ON.
	Receiver power is OFF.	Turn Power ON.
	Battery cable or battery.	Check battery cable and make sure battery is fully charged.
	Error in the control system.	Check LED Error Code light.
	Improper ground.	Check for proper grounding electrical circuit.
	Hydraulic valve or motor.	Ensure hydraulic pump is working properly and hydraulic tank is filled with oil.
	Intermittent function.	Check receiver antenna for damage and proper connection. Loose connector at the valve coil.

12.2 CONTROL PANEL INDICATOR LEDS

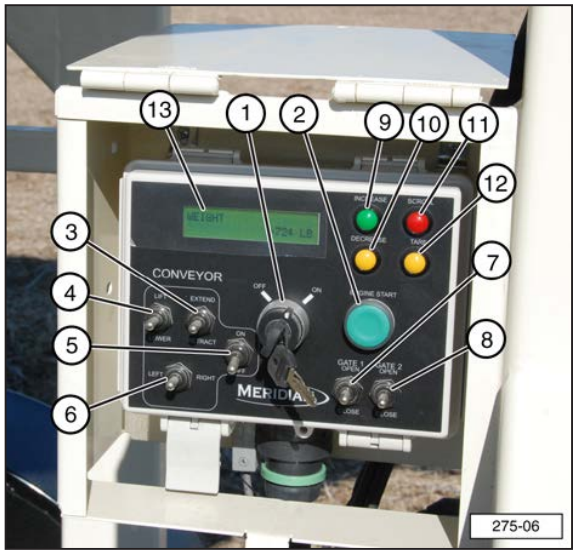

12.2.1 Error Code Outputs

The receiver module can identify problems with the system in the form of an error code. Check red indicator light (11) on the receiver to diagnose system problems.

Each of the outputs from the receiver module is designed with built-in short circuit and overload protection. The outputs can also detect a no-load or broken wire condition.

These error conditions are indicated by the red LED indicator on the receiver module or the HISTOGRAM page on the optional Palm Pilot™. Refer to the Error Code Chart for explanation of the error codes. Green LED indicator light (9) will blink on the receiver during normal communication.

The ON/OFF outputs will indicate an error under no load or broken wire status if NOT activated, and will detect a short if activated.

12.2.2 Error Codes

Error Code	Cause	Solution
1	RF Communication	Transmitter is OFF. Transmitter went into sleep mode. Interference in RF communication link.
2	Wrong ID	Transmitter and receiver are not synchronized.
3	Scale Serial Link Error	RS-232 communication cable between scale unit and receiver is damaged, disconnected, or the scale unit is OFF.
4	Low Battery	System voltage is below 10.5 Volts.
5	Conveyor Speed Fault	Check for short or open circuit.
6	Engine Start Fault	Check for short or open circuit.
7	Engine Stop Fault	Check for short or open circuit.
8	Conveyor Lift Fault	Check for short or open circuit.
9	Conveyor Lower Fault	Check for short or open circuit.
10	Conveyor Extend Fault	Check for short or open circuit.
11	Conveyor Retract Fault	Check for short or open circuit.
12	Conveyor Left Fault	Check for short or open circuit.
13	Conveyor Right Fault	Check for short or open circuit.
14	Slide Gate 1 Open Fault	Check for short or open circuit.
15	Slide Gate 1 Close Fault	Check for short or open circuit.
16	Slide Gate 2 Open Fault	Check for short or open circuit.
17	Slide Gate 2 Close Fault	Check for short or open circuit.

NOTE: Error codes are invalid during manual operation.

12.2.3 Control System Wiring Locations

Pin	Description
A	Conveyor Speed CR Proportional Output – Orange/Black
B	Engine Start Output - Green
C	Engine Stop Output - White
D	Conveyor Lift Output - Red
E	Conveyor Lower Output - Blue
F	Conveyor Extend Output – White/Black
G	Conveyor Retract Output - Orange
H	Power - White
J, K	NC
L	Conveyor Left Output - White
M	Conveyor Right Output - Green
N	Ground - Black
O	Slide Gate One Open Output – Red/Black
P	Slide Gate One Close Output – Blue/Black
Q	Slide Gate Two Open Output – Green/Black
R	Slide Gate Two Close Output- Black/White
S, T	NC
U	Scale Power Output
V, W, X	NC

13. WARRANTY

13.1 WARRANTY STATEMENT

Limited Materials and Workmanship Warranty
For Bulk Seed Tenders

Meridian Manufacturing Group (hereinafter referred to as the Manufacturer) hereby warrants the Bulk Seed Tender(s) sold by it to be free from any defect in material or workmanship under normal use and service for a period of one (1) year from the date of shipment. The Manufacturer's obligation under this warranty shall be limited to the repair or replacement only, FOB the original point of shipment, of any defective parts or portions of the seed tender or accessories manufactured by Meridian. Any warranty claim must be reported to the Manufacturer within one (1) year from the date of shipment.

THIS WARRANTY IS SUBJECT TO THE FOLLOWING LIMITATIONS, PROVISIONS AND CONDITIONS:

1. This warranty does not apply:
   a) To any product sold by the Manufacturer where it is used in areas exposed to corrosive or aggressive conditions including salt water, acids, alkaloid, ash, cement dust, animal waste or other corrosive chemicals from either inside or outside the bin.
   b) For failures or defects arising out of damage during shipment or during storage on site.
   c) To materials replaced or repaired under this warranty except to the extent of the remainder of the applicable warranty.
   d) To damage resulting from misuse, negligence, accident or improper site preparation by others.
   e) If the product has been altered or modified by others.
   f) If in the case of coating failures the failure is the result of damage, lack of proper maintenance or failure to remove road salt or other contaminants that may have come in contact with the bin surface.
   g) To loss of time, inconvenience, loss of material, down time or any other consequential damage.
   h) For a function that is different than original designed intent.

2. The obligation of the Manufacturer under this warranty shall not arise unless the Manufacturer is notified and this warranty is presented together with a written statement specifying the claim or defect within thirty (30) days after the failure is first detected or made known to the owner and within one (1) year from the shipment date. The Manufacturer in its sole discretion shall determine if the claim is valid and whether correction of the defect or failure shall be made by repair or replacement of the materials.

3. The coating warranty is based on the manufacturer's performance specification for Polyester Powder finishes and does not include repair of minor blemishes or rusting that is normally part of the general maintenance of the seed tender. This warranty does not cover excessive wear on interior coatings. See attachment for full Performance Specification details on Polyester Powder Finishes.

4. The obligation of the Manufacturer hereunder extends only to the original owner and to the Meridian dealer to whom the materials may have been initially sold. This warranty shall not be subject to any assignment or transfer without the written consent of the Manufacturer.

5. The customer shall acknowledge that it has made its own independent decision to approve the use of the supplied materials and also the specific fabrication and construction procedures utilized to complete the seed tender, and has satisfied itself as to the suitability of these products for this particular application.

6. The foregoing sets forth the only warranties applicable to said materials and said warranties are given expressly and in lieu of all other warranties, expressed or implied, statutory or otherwise, of merchantability or fitness for a particular purpose and all warranties which exceed or differ from said warranties herein are disclaimed by the Manufacturer.

7. The owners sole and exclusive remedy against the Manufacturer shall be limited to the applicable warranty set forth herein and the endorsements, if any, issued together with this document and no other remedy (including but not limited to the recovery of assembly or disassembly costs, shipping costs, direct, incidental, special, indirect or consequential damages for lost profits, lost sales, injury to person or property or any other loss, whether arising from breach of contract, breach of warranty, tort, including negligence, strict liability or otherwise) shall be available to the owner or Meridian Dealer or any other person or entitles whether by direct action or for contribution or indemnity or otherwise.

8. The financial obligation of the Manufacturer under this warranty shall be limited to the repair or replacement of the product as originally supplied and in no event shall exceed the original cost of the product supplied.

9. The Manufacturer shall not have any obligation under any warranty herein until all accounts for materials, installation and erection of the said product thereof and for labor and other work performed by the Manufacturer or its dealers have been paid in full by the owner.

Warranty Claim Procedure

1. Registering product with Meridian Manufacturing.
2. Contact the dealer unit was purchased from upon discovery of any defects.
3. A completed warranty claim form submitted by dealer to Meridian warranty representative for review and course of action.
4. Warranty repair work will only be performed by Meridian, the dealer or an approved representative. No warranty work completed prior to approval. Failure to follow procedure may affect any or all reimbursement.
5. Claims will be adjudicated at the sole discretion of the manufacturer and in accordance with the terms and conditions of the applicable limited warranty.
6. A complete list of warranty procedures can be procured from the Warranty Department or found in your owner's manual.

Effective July 1, 2009

14. PARTS

The following pages contain a list of serviceable parts for both the 275 DX or 375 DX Seed Express units.

Parts are available from your authorized Dealer Parts Department.

14.1 275 DX / 375 DX 2012 SEED EXPRESS 80371

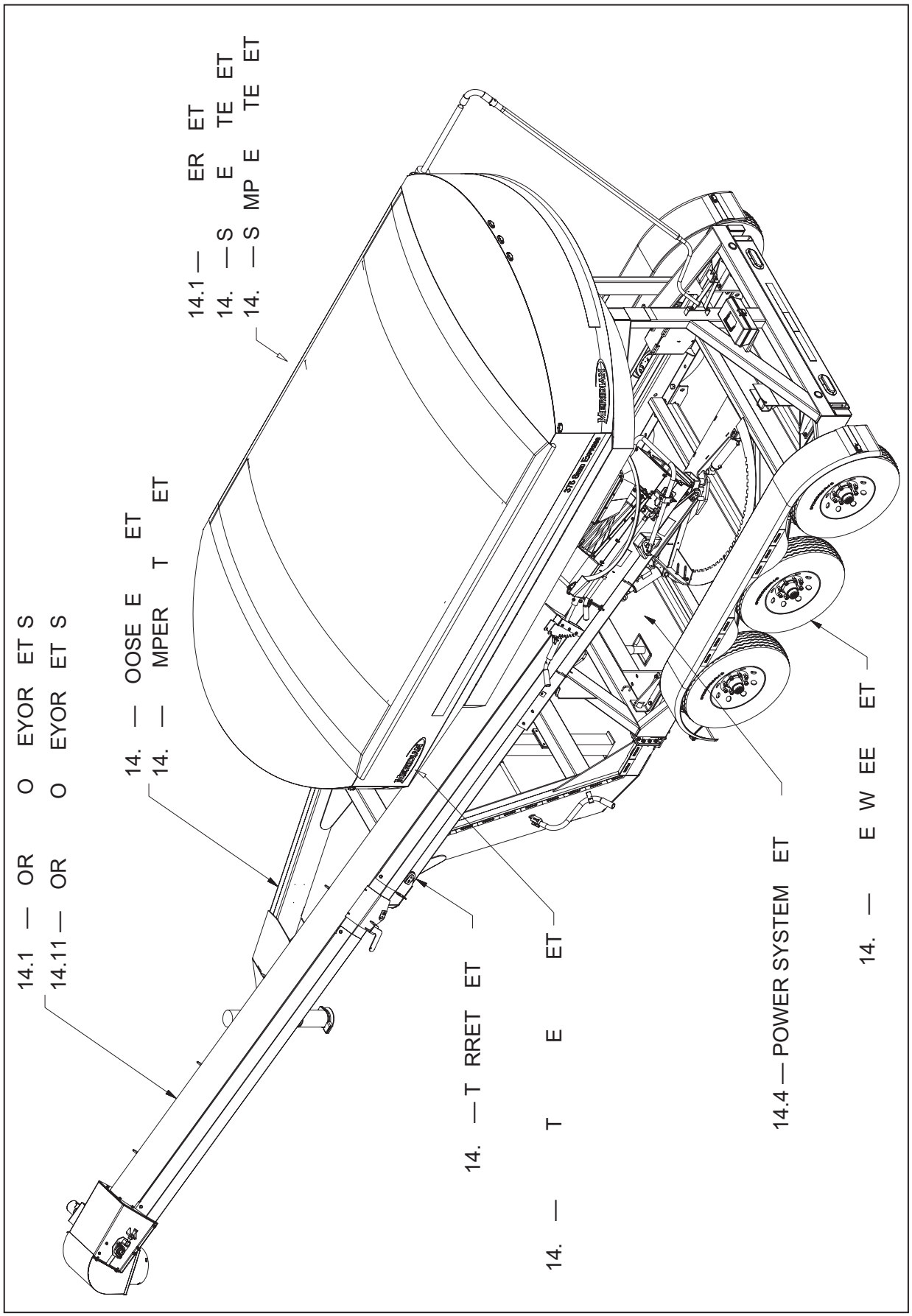

1	2	36150-00	Gate, Sample
2	12	19129	Rivet, 3/16” x 1/2"
3	1	25899	Ladder Assembly
4	4	47008	View Glass, Stainless Steel Ring As.
5	4	19619	Plug, Tube, 5" x 2"
6	9	19577	Bolt, Hex, Flanged, 3/8-16 x 3/4” long
7	24	19564	Nut, Hex, Flanged, 3/8-16
8	1	25746	Slide, Guide Bottom
9	1	25747	Guide Top
10	2	25745	Slide, Gate
11	1	26095	Kit, Agri Cover Tarp
12	2	19318	Nut, Hex, Flanged, 5/16-18
13	6	19568	Bolt, Hex, Flanged, 5/16-18 x 3/4”
14	1	19541	Bolt, Hex, 3/8-16 x 3/4” Stainless Steel
15	7	19347	Locknut, Nylon, 3/8-16
16	2	18151	Light, Amber Clearance
17	5	18229	Light, Red Clearance
18	1	18188	Light, Work (Optional)
19	1	25700	Weldment, Undercarriage
20	4	25318	Pin Assembly, Undercarriage
21	1	26115	Cover, Manifold, Plastic
22	2	19335	Bolt, Carriage, 3/8-16 x 1-1/2"
23	1	25712	Arm, Extension
24	3	25694	Pin, Hammerstrap, 1 x 6-1/4”
25	2	25696	Pin, Hammerstrap, 1 x 3-3/4”
26	2	25695	Pin, Hammerstrap, 1 x 2-3/4”
27	1	25763	Weldment, Crossbow
28	1	19774	Pin, Clevis, 1" x 5-45/64"
29	1	19777	Pin, Clevis w/ Cotter, 3/4” x 3-49/64”
30	2	18117	Light, Tail
31	1	21286-00	Battery, SP-30
32	2	23642-00	Pad Assembly, Wear
33	2	25319	Spacer, Rotate Cylinder
34	1	19771	Box, Tool

35	2	25276	Retainer, Gate Skirt
36	2	25279	Retainer, Gate Skirt (Side)
37	1	25662	Skirt, Gate
38	2	14045	Grommet, 1/2"
39	1	19247	Coupling with Setscrew, Engine
40	1	19248	Coupling with Setscrew, Pump
41	1	19289	Housing, Bell
42	1	19290	Coupler, Spider, Black
43	1	19178	Tank, Hydraulic with Filter 2012
44	1	19295	Pump, Hydraulic
45	1	19150	Cylinder, Lift
46	1	21270	Engine, Honda® GX340
47	2	20089	Decal, Gradient
48	2	20090	Decal, Gradient
49	3	19174	Decal, 275 Seed Express
50	4	20082	Decal, Meridian
51	2	19175	Decal, 375 Seed Express
52	1	19711	Decal, Road Transport
53	1	19712	Decal, Field Transport
54	1	19118	Pin, Zinc Square Snapper, 3/8" x 2-1/4"
55	1	19944	Decal, Warranty Notice**
56	1	19934	Decal, Caution Read Manual**
57	1	20088	Decal, Warning Hot Surface**
58	2	20087	Decal, Pinch Point Hand**
59	1	19195	Pin, Hitch w/Hairclip Pin, 3/4" x 6-1/4"
60	1	19594	Pin, Hairpin Cotter
61	2	19300	Bolt, Hex, 1/4-20 x 1/2” Steel, Mild
62	4	19334	Bolt, Carriage, 3/8-16 x 1”
63	1	26120	Trim, Edge (27-5/16”)
64	1	26119	Trim, Edge (10-5/8”)
65	1	19984	Decal, Serial Number**
66	1	14046	Harness, Wire with Switch Task Light (Optional)
67	1	19164	Kit, Fitting, Deluxe (NS)
68	1	19156	Transmitter, 375 - 275 Deluxe

69	1	19157	Control Box, Deluxe
70	1	19158	Harness, Wire, Deluxe (NS)
71	1	19165	Manifold, Valve
72	1	19166	Kit, Hose/Fitting (NS)
73	2	19149	Cylinder, Gate
74	2	19151	Cylinder, Rotate
75	16	19595	Nut, Hex, Flanged, 1/2-13
76	16	18943	Bolt, Hex, Flanged, 1/2-13 x 1-1/4” long
77	4	19699	Screw, Self Drilling, 8-32 x 1/2"
78	10	19779	Screw, Self Drilling, Zinc, 8-18 x 3/4"
79	7	19126	Nut, Hex, Flanged, 1/4-20 UNC
80	2	25912	Pad, Extend Arm Rest
81	4	19114	Capscrew, Socket Flat Contersink
82	4	19697	Load Cell
83	10	19569	Bolt, Hex, Flanged, 3/8-16 UNC x 1”
84	6	19348	Washer, Flat, 3/8
85	4	20173	Mount Assembly, Load Cell
86	2	18577	Capscrew, Socket Head
87	4	19325	Bolt, Hex, 3/8-16 UNC x 1”
88	4	19618	Bolt, Hex, 3/8-16 UNC x 1-34” Steel, Mild
L1	1	25673	Top Ladder Assembly
L2	1	25674	Swing Ladder Assembly
L3	8	19063	1" Tube Plug
L4	2	19325	Bolt, Hex, 3/8-16 x 1
L5	2	19347	3/8-16 Nylon Locknut
L6	1	19064	120 lb. Gas Spring Assist Shock
L7	1	19138	Self Gripping Velcro Cable
L8	2	19318	Nut, Hex, Flanged, 5/16-18
L9	2	19067	Rubber Pad
*			(NS) Not Shown
**			Refer to Section 3 for decal locations

14.1 LADDER DETAIL

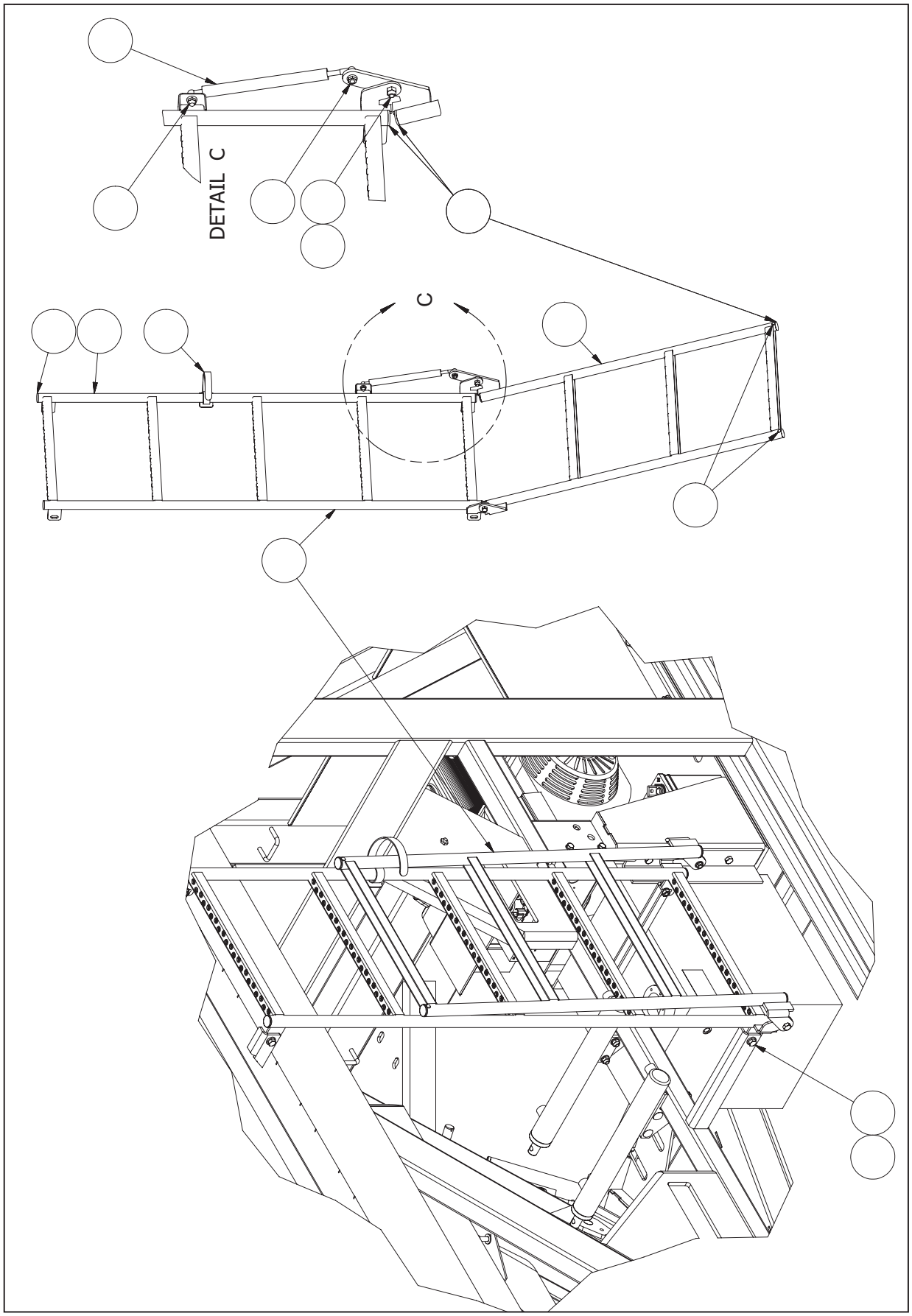

14.2 LIGHTS, DECALS, AND TARP DETAIL

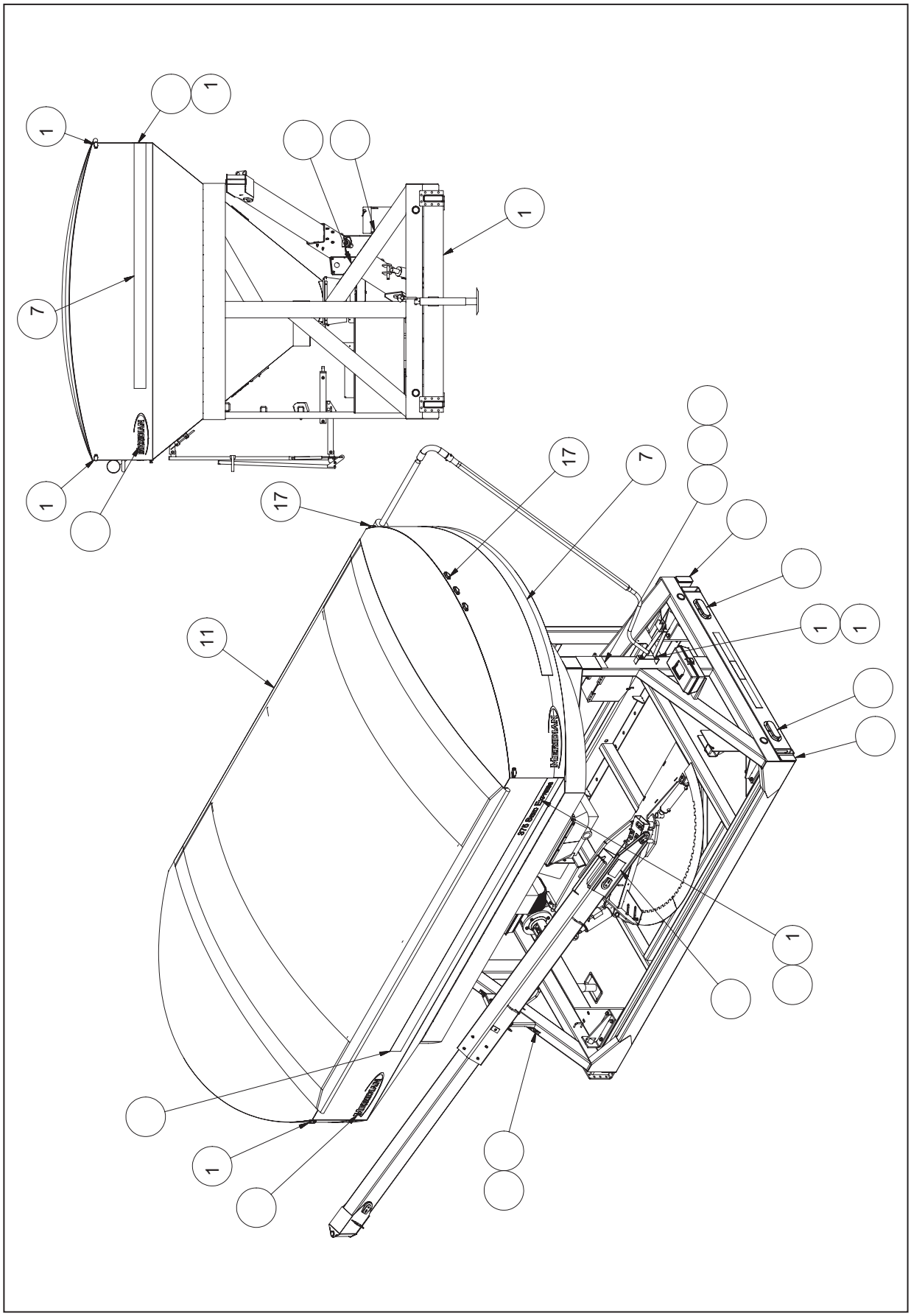

14.3 TURRET DETAIL

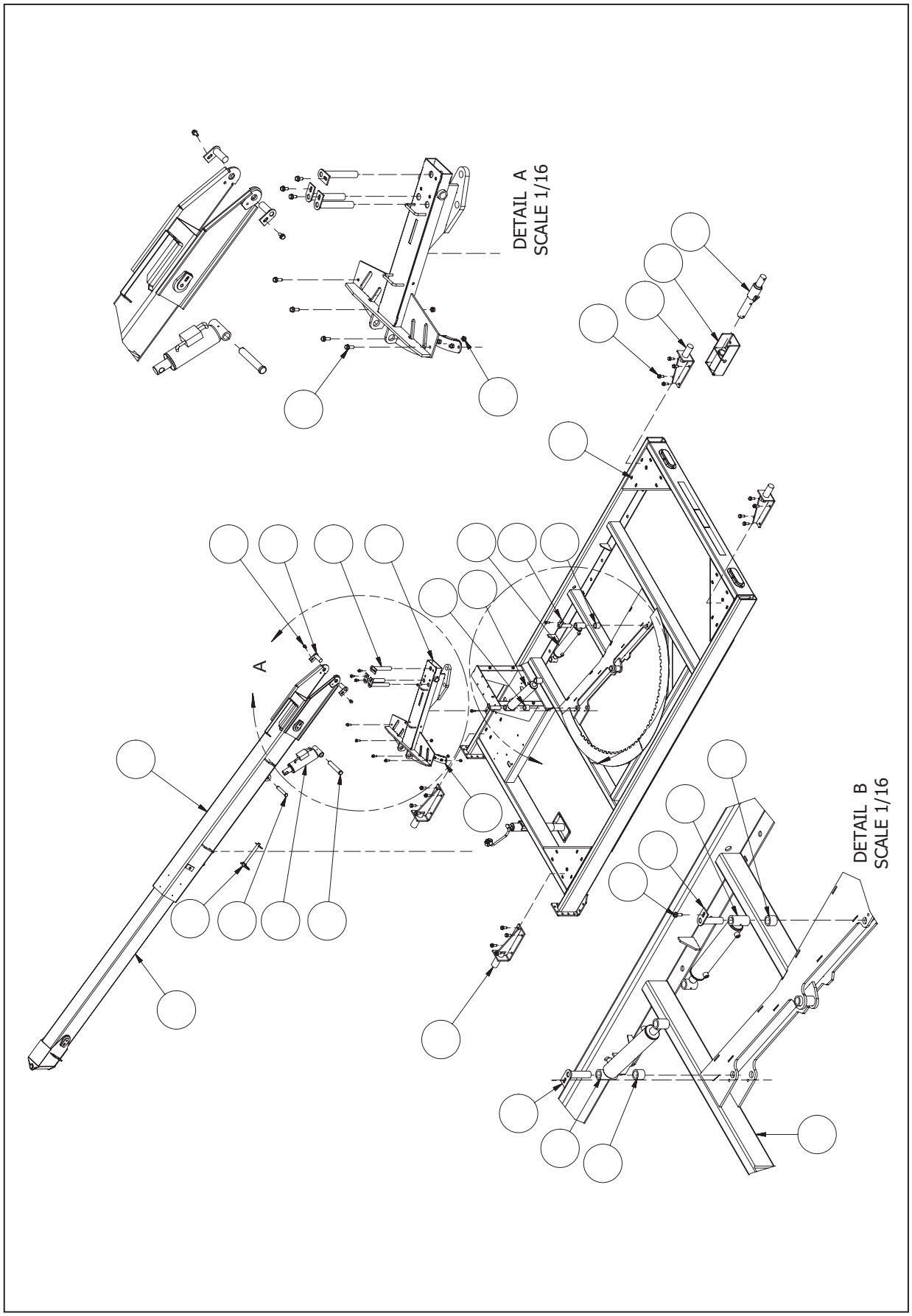

14.4 POWER SYSTEM DETAIL

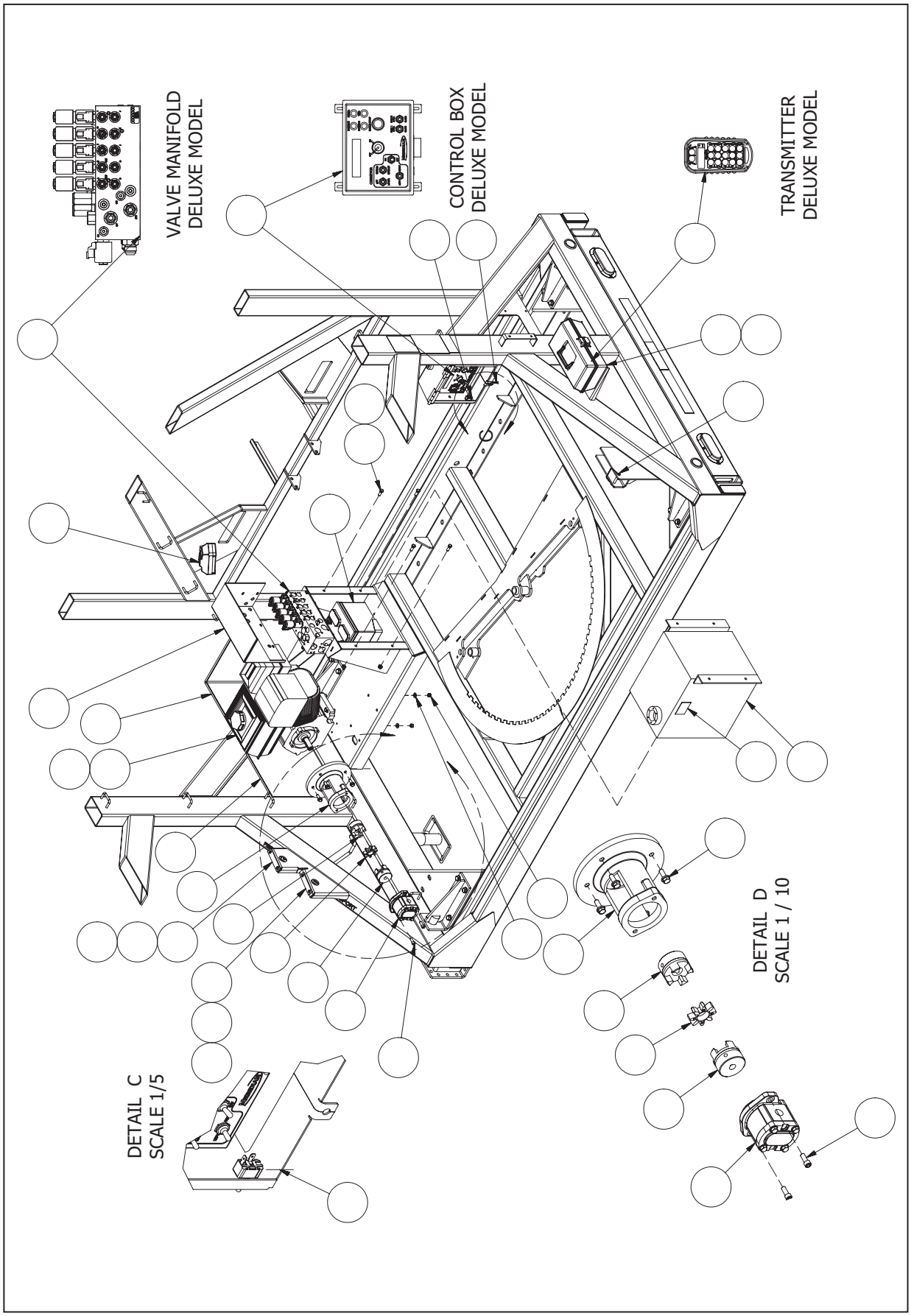

14.5 SLIDE GATE DETAIL

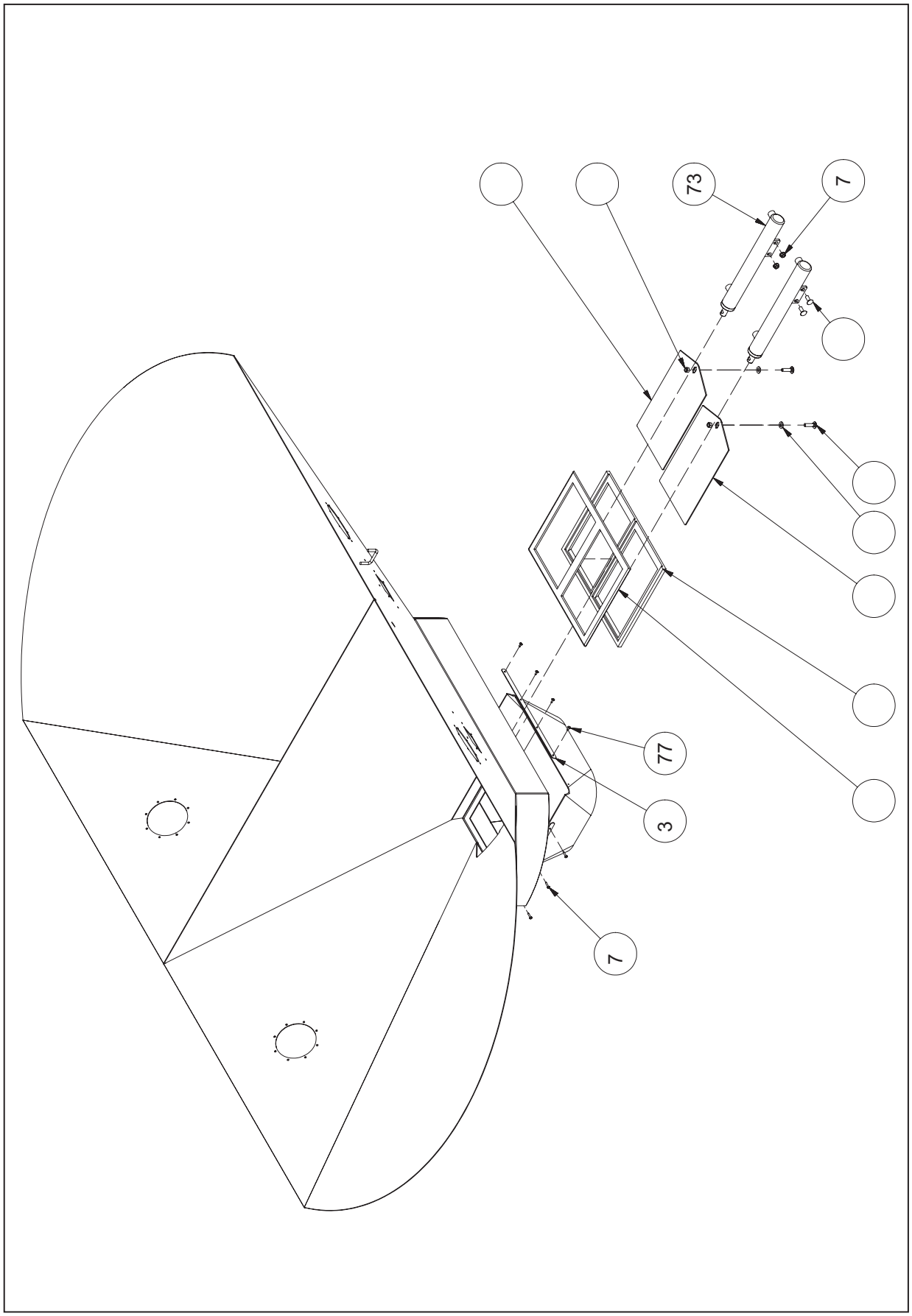

14.6 SAMPLE SLIDE GATE DETAIL

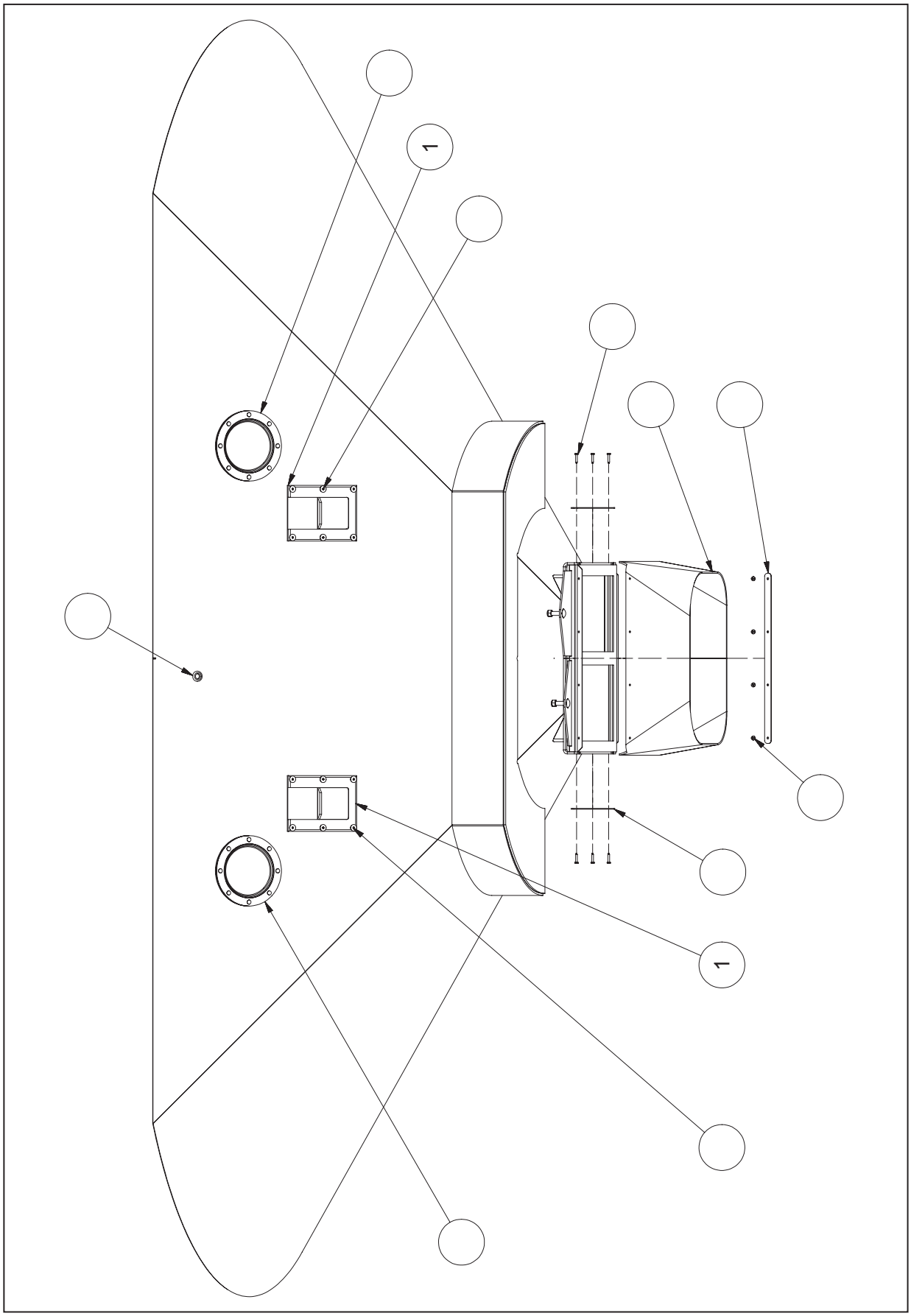

14.7 GOOSENECK DETAIL

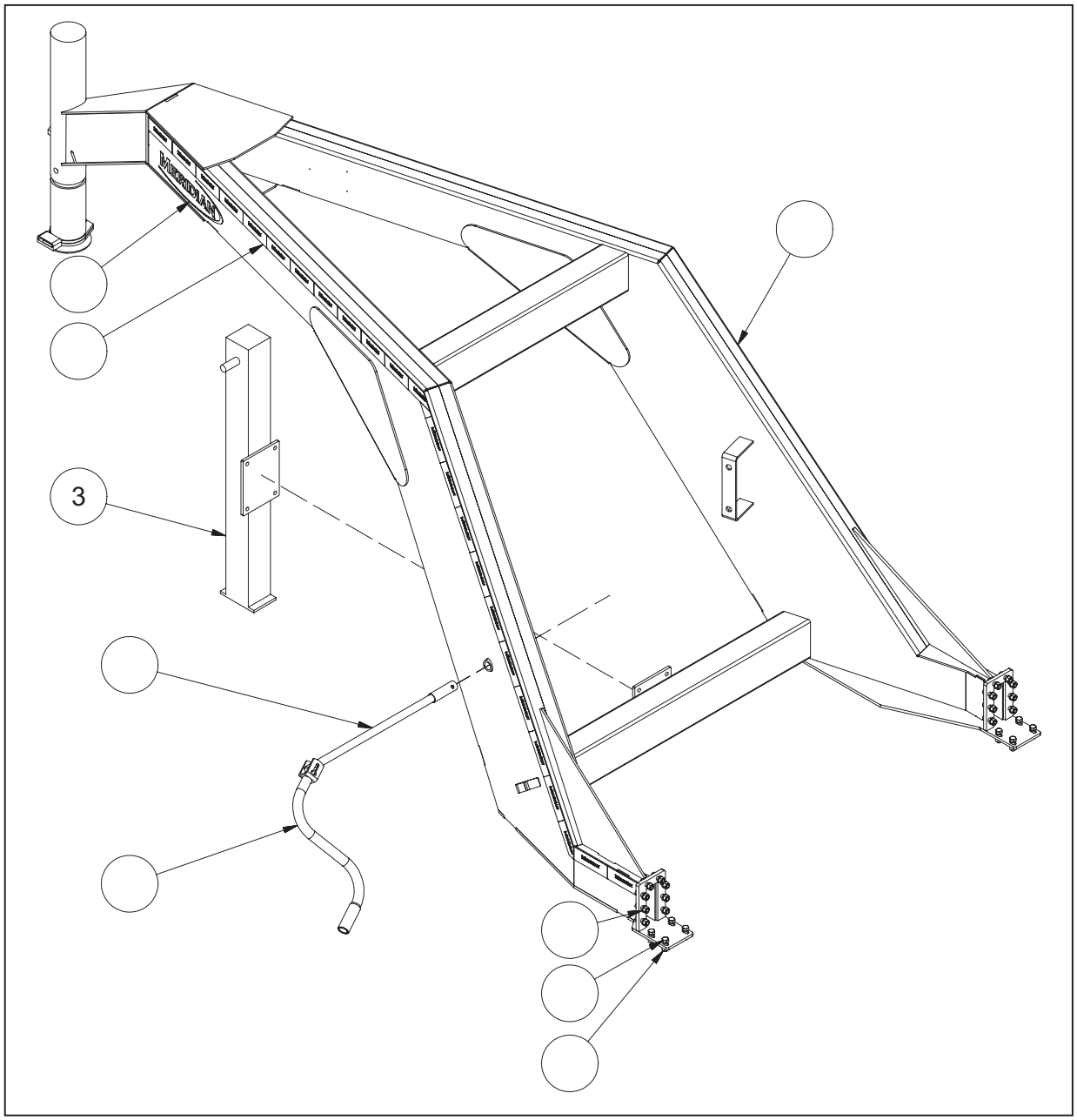

1	1	25261	Gooseneck Hitch
2	2	19911	Meridian Trailer White Decal
3	1	25322	Drop Leg Jack Gooseneck
4	1	18197	Crank Handle Gooseneck Jack
5	1	25325	Handle Extension Gooseneck Jack
6	24	19116	Bolt, Hex, 1/2-13 x 1-1/2” long Grade 8
7	24	19373	1/2" Lock Washer
8	24	19115	Nut, Hex 1/2-13, Grade 8
9	1	14043	375/275 GN Tongue Wire Harness (NS)
10	1	19275	Battery Breakaway BA10-150 (NS)
11	34	18096	Tape Reflective Meridian 2 x 6 x 6”
*			(NS) Not Shown

14.8 BUMPER HITCH DETAIL

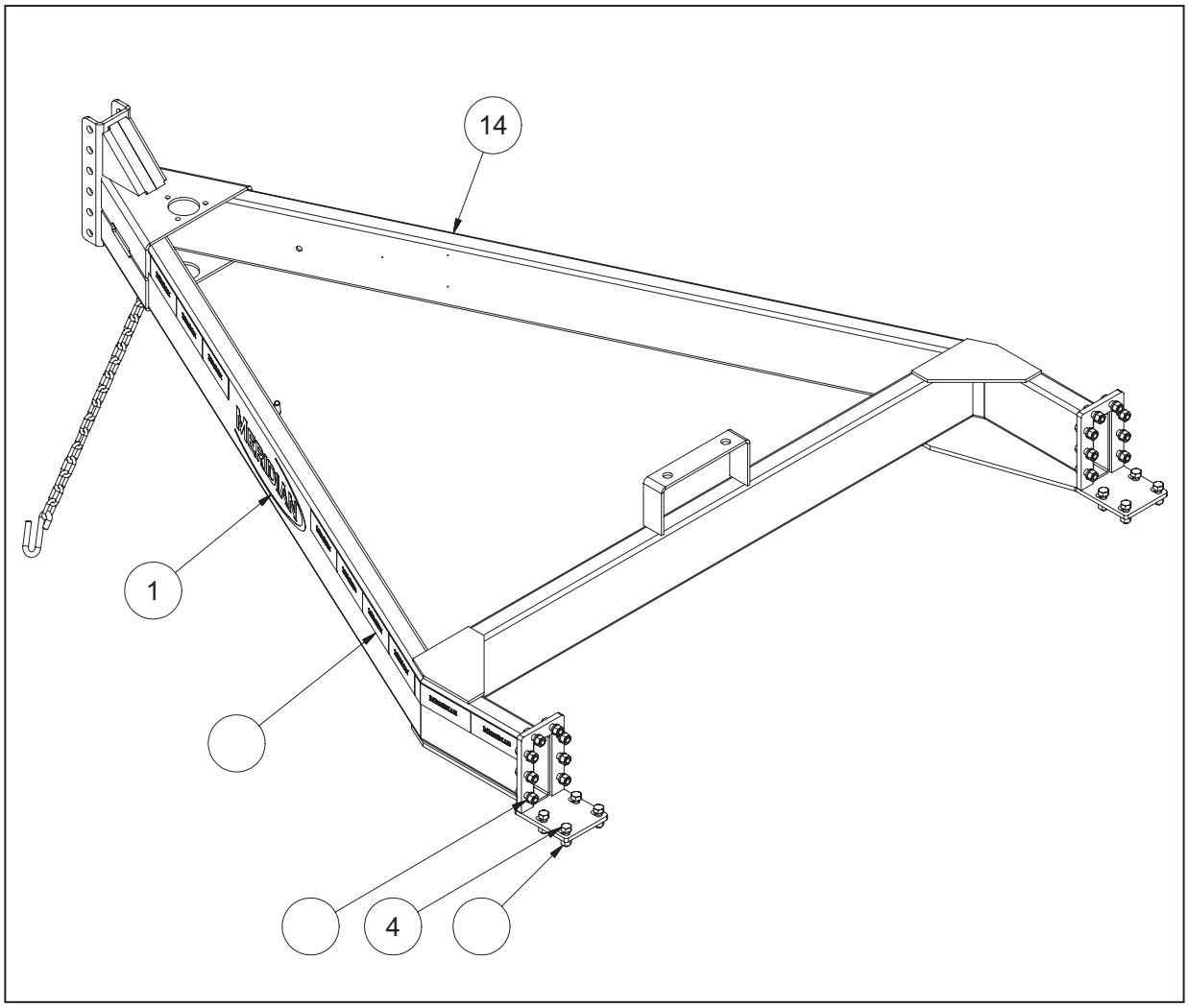

1	2	19911	Meridian Trailer White Decal
4	24	19116	Bolt, Hex, 1/2-13 x 1-1/2” long Grade 8
5	24	19373	1/2" Lock Washer
6	24	19115	Nut, Hex 1/2-13, Grade 8
14	1	25851	Bumper Hitch Weldment
15	1	14047	375/275 BH Tongue Wire Harness (NS)
19	1	18192	Jack Stand A-Frame Mount (NS)
20	1	19298	Coupler, Hitch 2-5/16 Adjustable (NS)
21	1	19275	Battery Breakaway (NS)
22	21	18096	Tape Reflective Meridian 2 x 6 x 6”
*			(NS) Not Shown

14.9 AXLE DETAIL

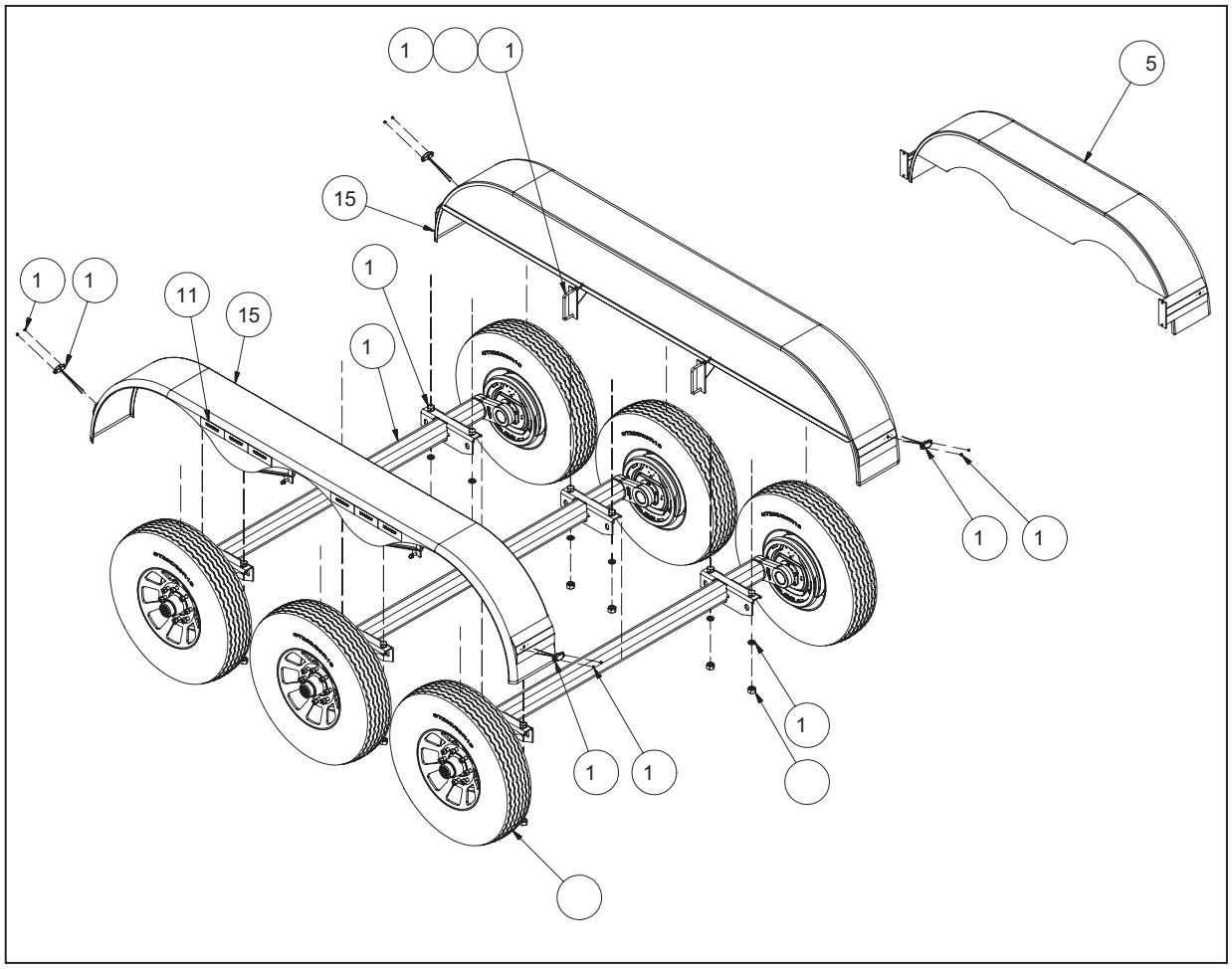

11	34	18096	Tape Reflective Meridian 2 x 6 x 6”
12	12	19388	Bolt, Hex, 3/4-10 x 2” long
13	12	19396	Helical Spring Lock Washers
14	3	18678	Axle 7000 lbs
15	2	25447	Fender Bolt-on Triple Axle
16	2	18151	Amber Clearance Light
17	2	18229	Red Clearance Light
18	8	19779	#8-18 x 3/4" Self Drilling Zinc Screw
19	8	19343	Nut, Hex 3/8-16
20	8	19349	3/8" Lock Washer
21	4	19119	U-Bolt 5 x 3 x 3/8”
22	6	18131	ST235/80R16
23	12	19652	Nut, Hex, Heavy 3/4-10
24	1	14048	Wire Harness Fender 2012 (NS)
25	2	26091	Fender Bolt-on Double Axle
*			(NS) Not Shown

Note: Quantities shown are for the triple axle model.

NOTES

14.10 CONVEYOR (6”) 80626

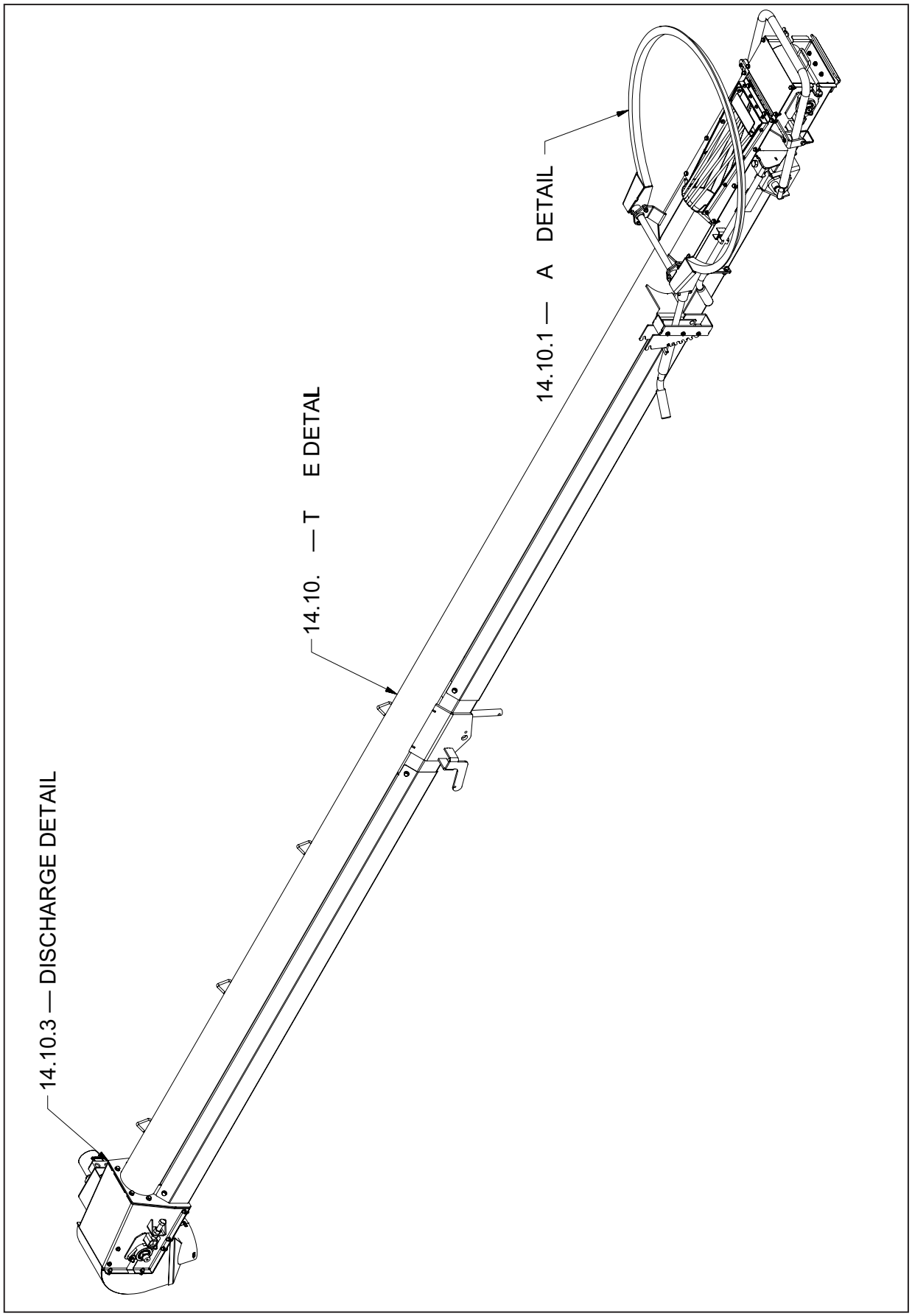

1	1	25874	Weldment, Conveyor Pan
2	1	25881	Weldment, Conveyor Tube
3	1	25892	Plate, Rear Hopper Cap
4	2	25842	Weldment, Roller Slide Plate
5	1	36201-02	Roller, Idler Assembly
6	3	19380	Bolt, Hex, 5/8-11 x 4-1/2"
7	4	19382	Nut, Hex, 5/8-11
8	2	19663	Nut, Square, 5/8-11
9	4	27040-00	Housing, Roller Bearing
10	4	21258-00	Bearing
11	3	21258-00C	Collar, Bearing
12	8	19335	Bolt, Carriage, 3/8-16 x 1-1/2"
13	16	19564	Nut, Hex, Flanged, 3/8-16
14	44	19318	Nut, Hex, Flanged, 5/16-18
15	—	—	For Future Use
16	1	25659	Plate, Retainer (Rear)
17	1	25887	Weldment, Discharge Transition
18	1	25438	Weldment, Discharge Hood
19	1	25443	Weldment, Discharge Hood Transition
20	1	25453	Plate, Bottom Discharge
21	1	26032	Weldment, Hopper Loop
22	1	25891	Plate, Right Cap
23	1	25893	Plate, Left Cap
24	1	25459	Weldment, Stand
25	1	25462	Weldment, Discharge Roller Slide Plate
26	1	25463	Plate, Transition Seal
27	1	26029	Pin, Hopper Loop Pivot
28	2	19404	Bushing, Nylon, 1”
29	1	25290	Lever, Hopper
30	2	25666	Weldment, Lock Plate Stainless
31	1	25277	Collar, Hopper Lever Lock
32	1	25476	Weldment, Swing Handle
33	1	25477	Plate, Skid, Stainless
34	1	25480	Weldment, Scoop

35	2	19133	Bumper, Rubber
36	1	19118	Ring, Snap, Square, Zinc, 3/8 x 2-1/4"
37	5	19126	Nut, Hex, Flanged, 1/4-20
38	1	19095	Holder, Tool
39	1	25657	Seal, Conveyor
40	2	25658	Plate, Retainer (Side)
41	2	25489	Guard, Belt, Galvanized
42	1	25494	Weldment, Hopper Guard
43	2	19093	Bearing, Roller, 7/8”
44	1	25839	Plate, Bearing Spacer
45	1	18188	Light, Work (Optional)
46	2	21257-00	Latch, Over-Center
47	2	25483	Weldment, Scoop Bracket
48	2	25664	Bushing (0.75 OD x 0.507 ID x 0.5")
49	2	19372	Washer, Flat, 1/2”
50	4	19595	Nut, Hex, Flanged, 1/2-13
51	2	19301	Bolt, Hex, 1/4-20 x 1” long
52	24	19568	Bolt, Hex, Flanged, 5/16-18 x 3/4” long
53	1	25497	Weldment, Rocker Pin
54	18	19577	Bolt, Hex, Flanged, 3/8-16 x 3/4” long
55	1	19379	Bolt, Hex, 5/8-11 x 4” long
56	1	19566 ms	Nut, Hex, Flanged, 5/8-11
57	2	19349	Washer, Lock, 3/8"
58	2	19069	Screw, Rnd Hd Phillip, 3/8-16 x 1” long
59	6	19569	Bolt, Hex, Flanged, 3/8-16 x 1” long
60	2	19447	Grip, Handle
61	1	19117	Pin, Slotted Spring
62	10	19315	Bolt, Carriage, 5/16-18 x 3/4” long
63	8	19307	Washer, Flat, 1/4”
64	15	19560	Bolt, Hex, 1/4-20 x 3/4” long
65	12	19128	Locknut, Nylon, 1/4-20
66	2	19346	Nut, Wing, 3/8-16
67	3	19328	Bolt, Hex, 3/8-16 x 2” long
68	3	19347	Locknut, Nylon, 3/8-16

69	1	19284	Pin, Spring, 3/16” x 1-1/8”
70	10	19310	Bolt, Hex, 5/16-18 x 1” Steel, Mild
71	1	36200-01	Roller, Drive Assembly
72	2	25810	Brush, 5-1/4"
73	2	25809	Retainer, Brush
74	4	19548	Rivet, 1/8"
75	1	19769	Motor, Hydraulic, 2.8 In³
76	4	19355	Cap Srew, 1/2-13 x 1-1/2” long
77	1	19129	Rivet, 3/16" x 1/2"
78	2	19249	Coupler, Lovejoy
79	1	19291	Coupling, Red Spider
80	2	20087	Decal, Pinch Point Hand
81	1	25660	Cover, Hopper Canvas (NS)
82	1	25499	Canvas, Hopper (NS)
83	1	21109	Belt, Cleat Cross, 8” x 42’1” (NS)
84	1	19176	Kit, Fitting Conveyor 2012 (NS)
85	1	19177	Kit, Hose Conveyor 2012 (NS)
88	2	18578	Tube, Hydraulic SS Assembly (2012)
89	6	18679	Clamp, Cushioned, 1/2"
90	1	25654	Plate, Brush Holder
91	1	27051-00	Brush
92	1	27009-00	Clamp, Brush Holder
*			(NS) Not Shown

14.10.1 Pan Detail

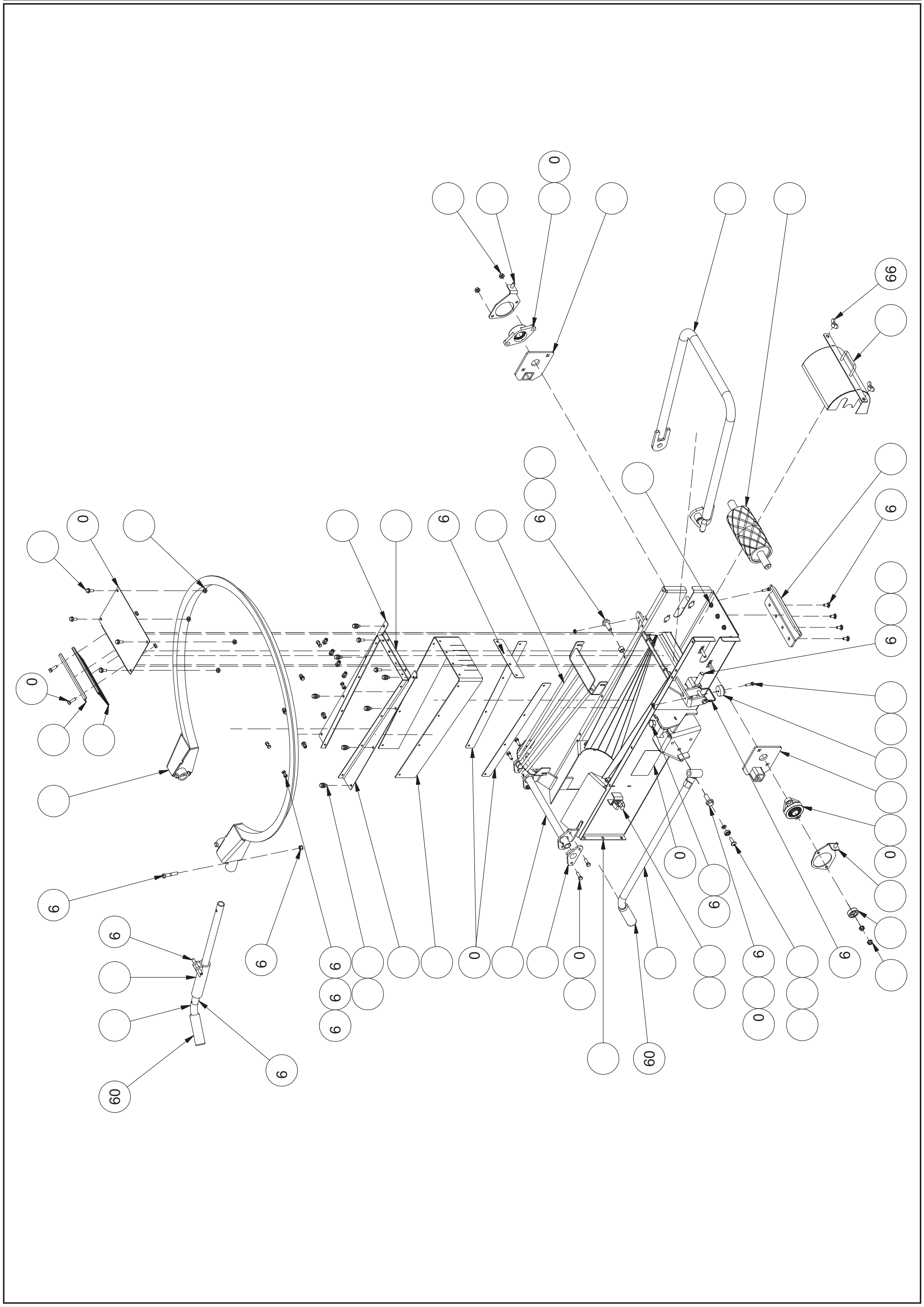

14.10.2 Tube Detail

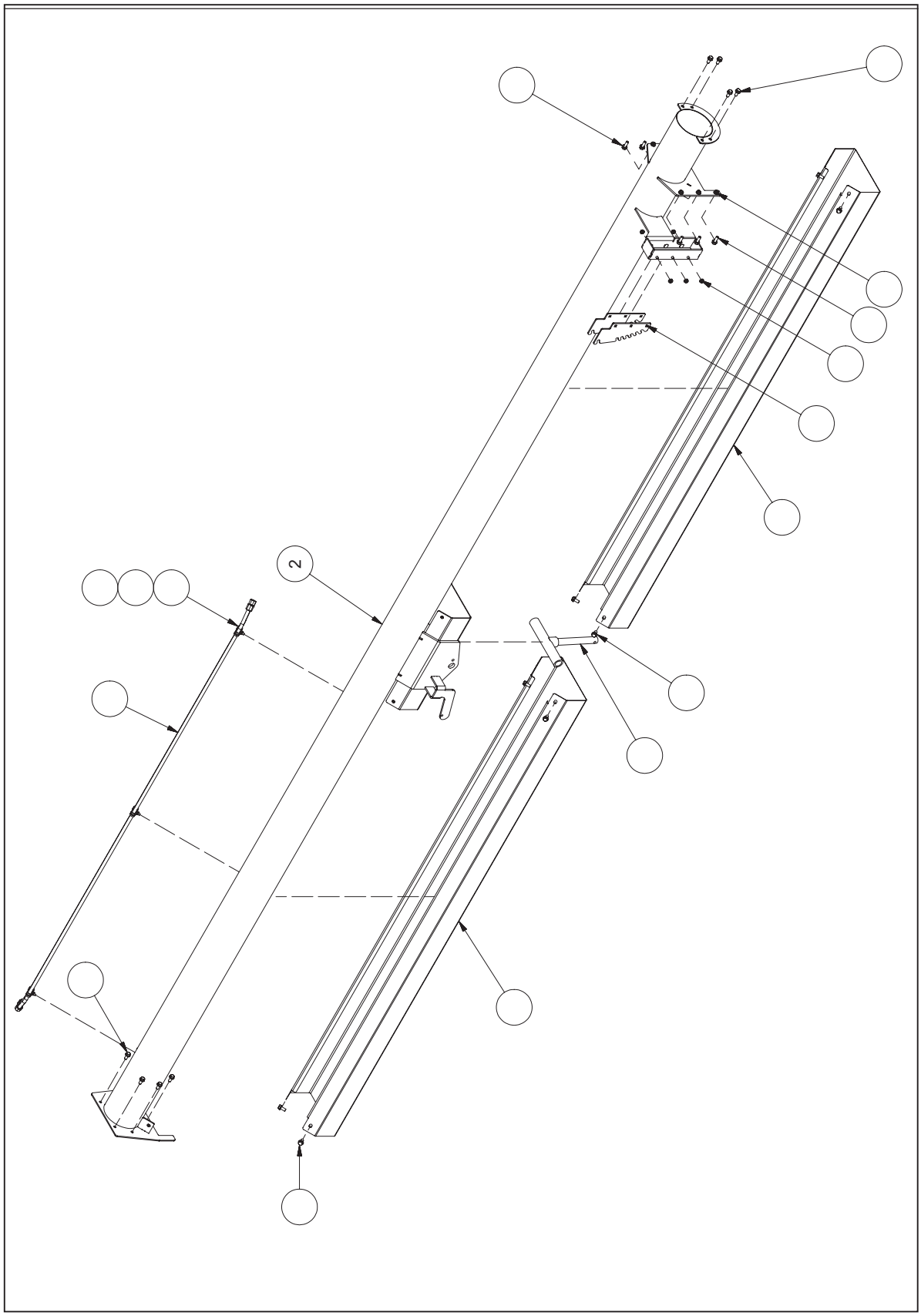

14.10.3 Discharge Detail

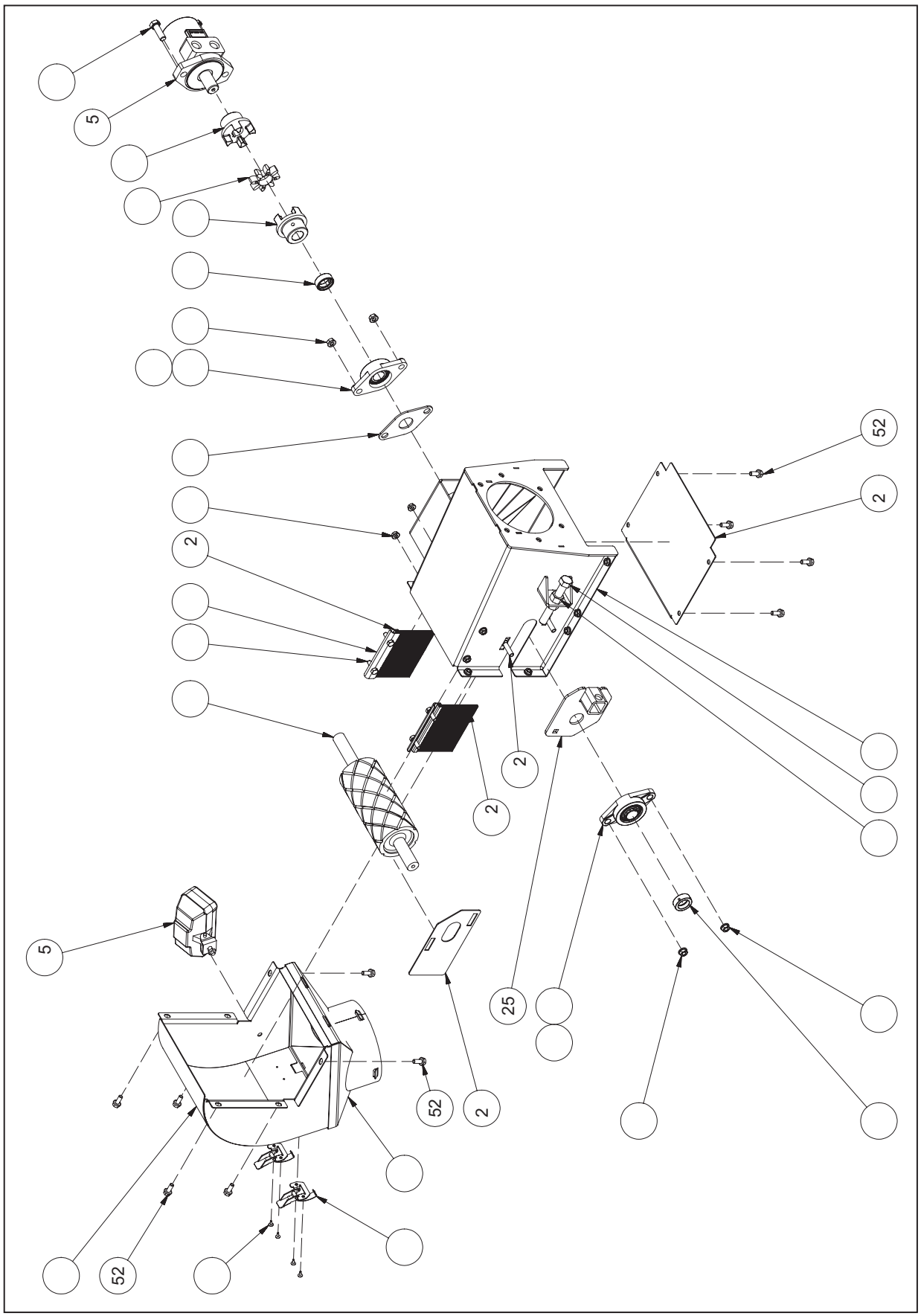

NOTES

14.11 CONVEYOR (8”) 80627

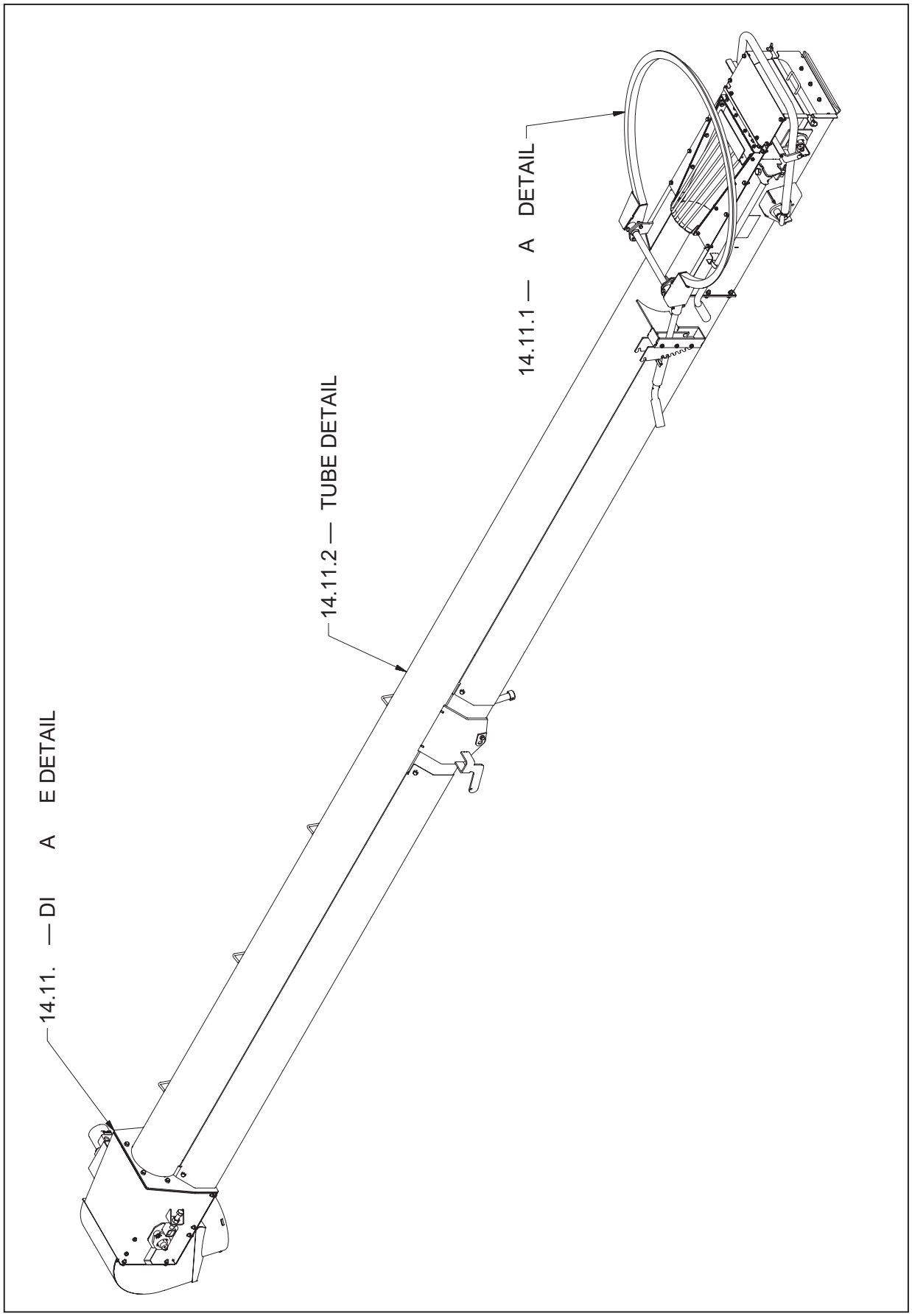

1	1	25788	Weldment, Conveyor Tube
2	1	25781	Weldment, Pan
3	1	25805	Weldment, Discharge Transition
4	1	25829	Weldment, Discharge Hood
5	1	25799	Plate, Discharge Bottom
6	1	25827	Weldment, Discharge Hood Transition
7	2	21257-00	Latch, Over-Center
8	4	19548	Rivet, Ø1/8"
9	4	27040-00	Housing, Roller Bearing
10	4	21258-00	Bearing
11	4	21258-00C	Bearing Collar
12	4	19595	Nut, Hex, Flanged, 1/2-13 UNC
13	1	19533	Drive Roller Assembly
14	18	19564	Nut, Hex, Flanged, 3/8-16 UNC
15	1	19768	Hydraulic Motor, 4.5 In³
16	1	25838	Plate, Transition Seal
17	4	19695	Carriage Bolt, 3/8-16 UNC x 1-1/4"
18	1	25839	Plate, Bearing Spacer
19	2	19355	Cap Screw, 1/2-13 UNC x 1-1/2”
20	2	25810	Brush, 5-1/4"
21	2	25809	Retainer, Brush
22	42	19318	Nut, Hex, Flanged, 5/16-18 UNC
23	1	19554	Roller, Idler Assembly
24	18	19577	Bolt, Hex, Flanged, 3/8-16 UNC x 3/4”
25	24	19568	Bolt, Hex, Flanged, 5/16-18 UNC x 3/4”
26	2	25842	Weldment, Roller Slide Plate
27	4	19335	Bolt, Carriage, 3/8-16 UNC x 1-1/2"
28	2	19663	Nut, Square, 5/8-11 UNC
29	4	19382	Nut, Hex, 5/8-11 UNC
30	3	19380	Bolt, Hex, 5/8-11 UNC x 4-1/2"
31	1	25844	Brush Holder Assembly
32	1	25786	Plate, Right Cap
33	1	25787	Plate, Left Cap
34	8	19569	Bolt, Hex, Flanged, 3/8-16 UNC x 1

35	2	25847	Guard, Belt Galvanized
36	2	19404	Bushing, Nylon 1”
37	1	25672	Plate, Hopper Cap (Rear)
38	1	25240	Seal, Rubber Hopper
39	1	25241	Seal, Hopper Retainer (Rear)
40	2	25242	Seal, Hopper Retainer (Side)
41	1	25245	Weldment, Conveyor Scoop
42	2	25248	Weldment, Scoop Bracket
43	4	25252	Spacer, Stand Hinge (NS)
44	5	19126	Nut, Hex, Flanged, 1/4-20 UNC
45	1	25251	Weldment, Stand
46	1	19095	Holder, Tool
47	2	19093	Bearing, Roller, 7/8" OD
48	2	19346	Wing Nut, 3/8-16 UNC
49	1	25278	Plate, Discharge Roller Slide
50	1	26032	Weldment, Hopper Loop
51	1	26029	Pin, Hopper Loop Pivot
52	10	19315	Bolt, Carriage, 5/16-18 UNC x 3/4”
53	1	25340	Plate, Skid Stainless
54	2	19133	Bumper, Rubber
55	2	19575	Bolt, Hex, Flanged, 1/2-13 UNC x 1-1/2”
56	1	19177	Kit, Hose, Conveyor (NS)
57	1	19176	Fitting, Kit, Conveyor (NS)
58	1	21110	Belt Cleat Cross, 12” x 42'5” (NS)
59	1	25671	Canvas Hopper (NS)
60	1	25273	Weldment, Swing Handle
61	2	25664	Bushing, 0.75 OD x 0.507 ID x 0.5"
62	1	18188	Light, Work (Optional)
63	3	19328	Bolt, Hex, 3/8-16 UNC x 2”
64	3	19347	Locknut, Nylon, 3/8-16 UNC
65	6	19301	Bolt, Hex, 1/4-20 UNC x 1”
66	2	19069	Screw, Rnd Head Phillip, 3/8-16 x 1”
67	2	19447	Grip, Handle
68	2	19249	Coupler, Lovejoy

69	1	19291	Coupling, Red Spider
70	8	19310	Bolt, Hex, 5/16-18 UNC x 1” Steel, Mild
71	1	25290	Lever, Hopper
72	1	25429	Guard, Hopper Weldment
73	1	25277	Weldment, Hopper Lever Lock Collar
74	1	19118	Ring, Snap, Square, Zinc, 3/8" x 2-1/4"
75	2	25666	Plate, Lock, Stainless
76	2	20087	Decal, Pinch Point Hand
77	1	19117	Pin, Slotted Spring
78	1	19379	Bolt, Hex, 5/8-11 UNC x 4” Steel, Mild
79	2	19349	Washer, Lock, 3/8"
80	12	19128	Nut, Hex, Nylon, 1/4-20 UNC
81	11	19560	Bolt, Hex, 1/4-20 UNC x 3/4”
82	12	19307	Washer, Flat, 1/4”
83	1	19566 ms	Nut, Hex, Flanged, 5/8-11 UNC
84	1	19284	Pin, Spring, 3/16" x 1-1/8"
85	1	25735	Pin, Rocker Weldment
86	2	25696	Pin, Hammerstrap, 1” x 3-3/4”
87	1	29869	Collar
88	1	25660	Cover, Hopper Canvas (NS)
89	2	18578	Tube, Hydraulic SS Assembly (2012)
90	6	18679	Clamp, Cushioned, 1/2”
*			(NS) Not Shown

14.11.1 Pan Detail

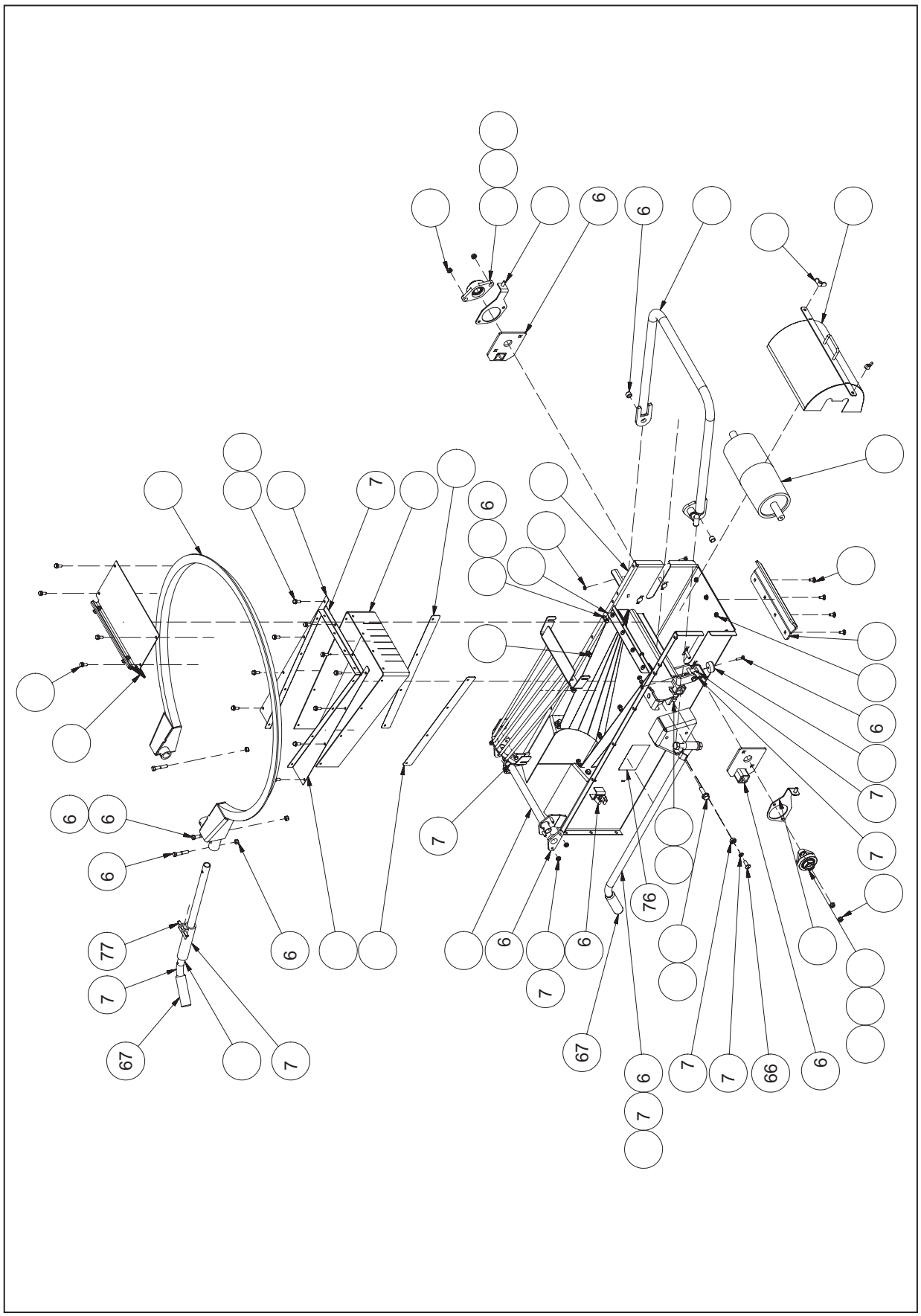

14.11.2 Tube Detail

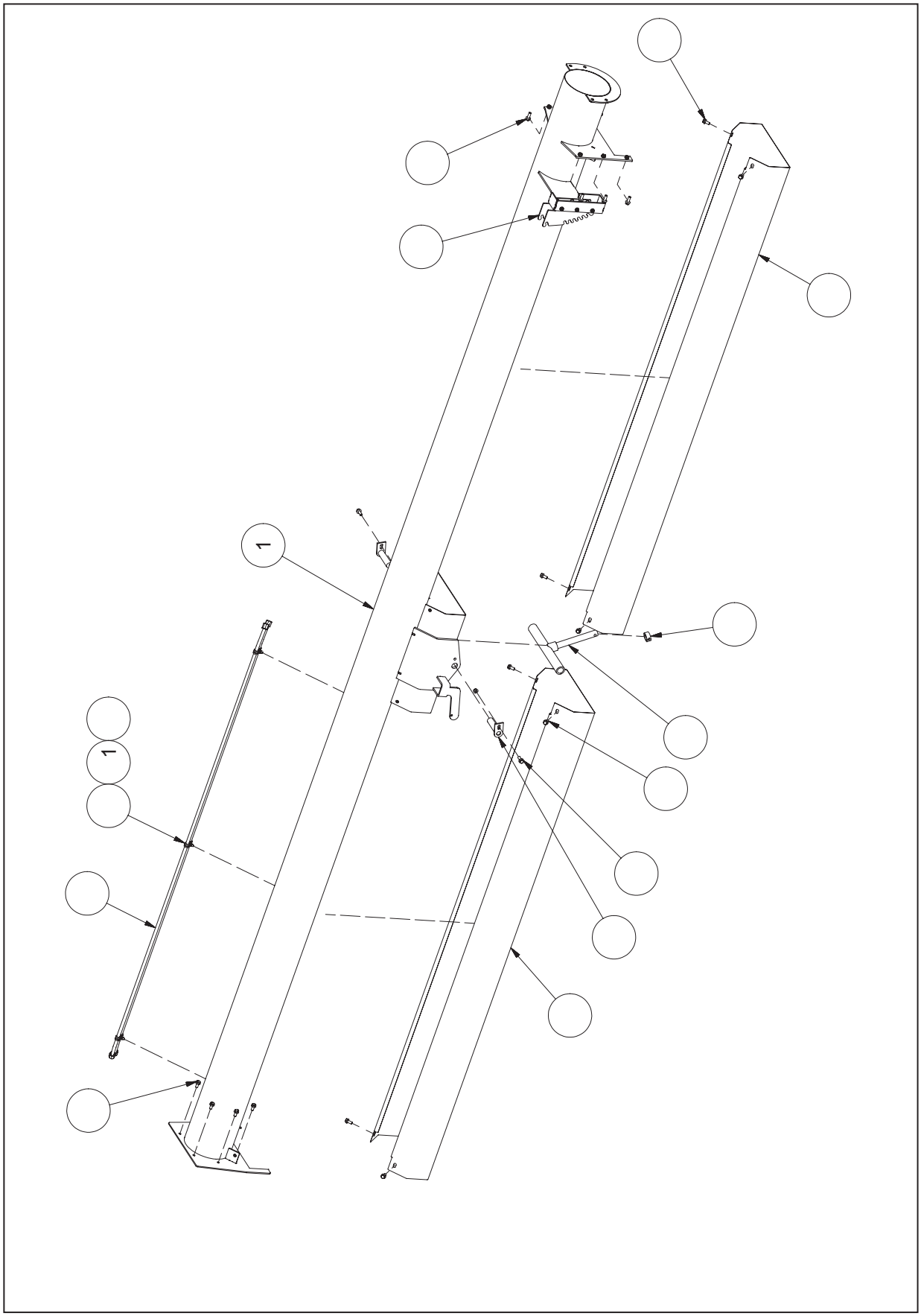

14.11.3 Discharge Detail

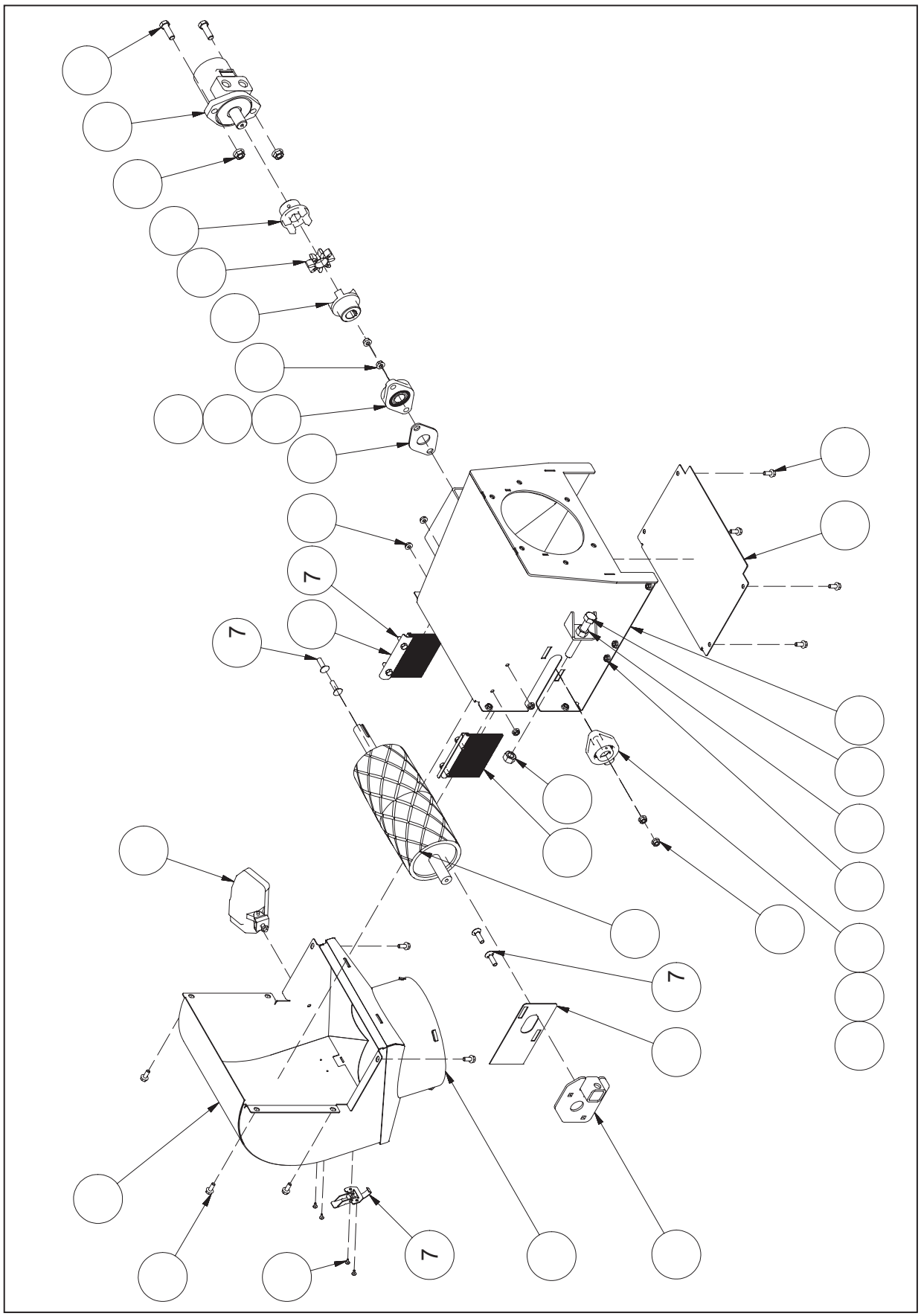

EXPERIENCE THE ADVANTAGES

OF MERIDIAN BUILT STORAGE SOLUTIONS

AGRICULTURAL

INDUSTRIAL

OIL & GAS

Camrose Office
4232 - 38 St.
Camrose, AB T4V 4B2
PH: 780.672.4516
TF: 800.830.2467
FX: 780.672.4759

Lethbridge Office
3125 - 24 Ave. N.
Lethbridge, AB T1H 5G2
PH: 403.320.7070
TF: 800.661.1436
FX: 403.320.7579

Storm Lake Office
2902 Expansion Blvd.
Storm Lake, IA 50588
PH: 712.732.1780
TF: 800.437.2334
FX: 712.732.1028

Winkler Office
Box 760, 275 Hespler Ave.
Winkler, MB R6W 4A8
PH: 204.325.7883
TF: 800.665.7259
FX: 204.325.5556

MERIDIAN MANUFACTURING GROUP
www.meridianmfg.com

© 2012 Meridian Manufacturing Group. Registered Trademarks Used Under License.

Printed In US (01/2012)
Form No. 18990