**IN THE UNITED STATES DISTRICT COURT**
**FOR THE DISTRICT OF NORTH DAKOTA**

| | | |
|---|---|---|
| UNVERFERTH MFG. CO., INC.,<br>601 South Broad Street<br>Kalida, Ohio 45853 | ) | Case No.: |
| Plaintiff, | ) | **COMPLAINT** |
| v. | ) | **JURY TRIAL DEMANDED** |
| NORWOOD SALES INC.,<br>11202 38th Street S<br>Horace, North Dakota 58047-9770 | ) | |
| Defendant. | ) | |

## COMPLAINT FOR PATENT INFRINGEMENT

Plaintiff, Unverferth Manufacturing Company, Inc. ("Unverferth"), by and through the undersigned counsel, files this Complaint for Patent Infringement against Defendant, Norwood Sales Inc. ("Defendant" or "Norwood"), and hereby alleges as follows:

## NATURE OF THE ACTION

1. This is a civil action for patent infringement. Plaintiff's claims are based on the unauthorized, infringing manufacture, use, sale, and/or offer for sale by Defendant of certain of its seed tender products including, for example, Norwood's Seed Shuttle seed tender products.

## THE PARTIES

2. Plaintiff Unverferth is a corporation organized and existing under the laws of the State of Ohio having a place of business at 601 South Broad Street, Kalida, Ohio 45853.

3. Defendant Norwood is a corporation organized and existing under the laws of the State of North Dakota having a place of business at 11202 38th Street S, Horace, North Dakota, 58047.

**Unverferth Exhibit 2010**
***Par-Kan v. Unverferth***
**IPR2024-01427**

## JURISDICTION AND VENUE

4. This is an action for patent infringement arising under the provisions of the Patent Laws of the United States, 35 U.S.C. §§ 271, 281 and 283-285. This Court has subject matter jurisdiction pursuant to 28 U.S.C. §§ 1331 and 1338(a).

5. Defendant has manufactured, used, offered for sale and/or sold, and currently manufactures, uses, offers for sale, and/or sells infringing products, including the Seed Shuttle seed tender products, at Defendant's facilities in Horace, North Dakota and Cooperstown, North Dakota, which are located within this judicial district.

6. Defendant has placed its infringing products into the stream of commerce with the expectation that they will be offered for sale, sold and used in this judicial district. By way of example, and upon information and belief, Defendant's infringing Seed Shuttle seed tender products have been and are currently available at Defendant's facilities at 11202 38th Street S, Horace, North Dakota 58047 and 102 Sunflower Avenue, Cooperstown, North Dakota 58425, which are located within this judicial district.

7. This Court has personal jurisdiction over Defendant.

8. Venue is proper in this Court pursuant to 28 U.S.C. §§ 1391 and 1400(b).

## THE PATENTS-IN-SUIT

9. On July 17, 2012, the United States Patent and Trademark Office ("the USPTO") duly and legally issued U.S. Patent No. 8,221,047 ("the '047 patent"), which is attached hereto as Exhibit A.

10. Plaintiff Unverferth is the owner of all right, title and interest in and to the '047 patent, including the right to sue for and recover all past, present and future damages for infringement of the '047 patent.

11. On March 3, 2015, the USPTO duly and legally issued U.S. Patent No. 8,967,940 ("the '940 patent"), which is attached hereto as Exhibit B.

12. Plaintiff Unverferth is the owner of all right, title and interest in and to the '940 patent, including the right to sue for and recover all past, present and future damages for infringement of the '940 patent.

13. On August 29, 2017, the USPTO duly and legally issued U.S. Patent No. 9,745,123 ("the '123 patent"), which is attached hereto as Exhibit C.

14. Plaintiff Unverferth is the owner of all right, title and interest in and to the '123 patent, including the right to sue for and recover all past, present and future damages for infringement of the '123 patent.

15. Plaintiff Unverferth manufactures, uses, sells, and/or offers for sale seed tender products that practice the '047, '940, and '123 patents.

16. Defendant had knowledge of Plaintiff's seed tender products and the '047, '940, and '123 patents prior to the filing of this Complaint. Defendant had knowledge of the '047, '940, and '123 patents no later than January 31, 2018. On January 31, 2018, counsel for Unverferth sent a letter to Norwood informing Norwood of, *inter alia*, the '047, '940, and '123 patents and provided claim charts evidencing Defendant's infringement of those patents. A copy of the letter is attached hereto as Exhibit D.

17. Upon information and belief, after receipt of Unverferth's letter, Norwood has continued to use, manufacture, sell, and/or offer for sale seed tender products that practice the '047, '940, and '123 patents.

## DEFENDANT'S INFRINGING ACTS

### Infringement of the '047 Patent

18. Defendant has manufactured, used, sold and/or offered for sale, and currently manufactures, uses, sells, and/or offers for sale products in and/or into the United States that infringe at least claim 1 of the '047 patent under United States law. Non-limiting examples of Defendant's products that infringe the '047 patent include Norwood's Seed Shuttle seed tenders, such as Seed Shuttle model numbers SS400 and SS500.

19. Norwood's Seed Shuttle seed tenders are a seed or grain tender including a frame, a main hopper mounted on the frame and having a main hopper discharge.

20. Norwood's Seed Shuttle seed tenders include a base mounted on the frame below the main hopper discharge.

21. Norwood's Seed Shuttle seed tenders include a support arm having first and second ends.

22. Norwood's Seed Shuttle seed tenders include a first coupling connecting the first end of the support arm with the base, the first coupling being rotatable in relation to the base about a first vertical axis of rotation, and the first end of the support arm being rotatable in relation to the first coupling about a first horizontal axis of rotation.

23. Norwood's Seed Shuttle seed tenders include a conveyor having a longitudinal axis and first and second ends, a conveyor hopper at the first end, a conveyor discharge at the second end, and an internal elevator for moving seed or grain from the conveyor hopper to the conveyor discharge.

24. Norwood's Seed Shuttle seed tenders include a second coupling connecting the second end of the support arm with the conveyor at an approximate center of gravity of the

conveyor, the second coupling defining a second vertical axis of rotation that is not parallel to the conveyor longitudinal axis, and the conveyor being rotatable in relation to the second end of the support arm about the second vertical axis of rotation between an unloading position wherein the conveyor hopper is disposed below the main hopper discharge to receive agricultural product from the main hopper and a loading position wherein the conveyor discharge is disposed above the main hopper to dispense agricultural product into the main hopper.

**Infringement of the '940 Patent**

25. Defendant has manufactured, used, sold and/or offered for sale, and currently manufactures, uses, sells, and/or offers for sale products in and/or into the United States that also infringe at least claim 16 of the '940 patent under United States law. Non-limiting examples of Defendant's products that infringe the '940 patent include Norwood's Seed Shuttle seed tenders, such as Seed Shuttle model numbers SS400 and SS500.

26. Norwood's Seed Shuttle seed tenders are a seed or grain tender including a main hopper having a main hopper discharge.

27. Norwood's Seed Shuttle seed tenders include a base positioned below the main hopper.

28. Norwood's Seed Shuttle seed tenders include a support arm having first and second ends.

29. Norwood's Seed Shuttle seed tenders include a first coupling connecting the first end of the support arm with the base, the first coupling being rotatable in relation about a first vertical axis of rotation, and the first end of the support arm being rotatable about a first horizontal axis of rotation.

30. Norwood's Seed Shuttle seed tenders include a conveyor having a longitudinal axis and first and second ends, a conveyor hopper at the first end, and a conveyor discharge at the second end.

31. Norwood's Seed Shuttle seed tenders include a second coupling connecting the second end of the support arm with the conveyor at an approximate center of gravity of the conveyor, the second coupling defining a first conveyor axis of rotation that is not parallel to the conveyor longitudinal axis, and the conveyor being rotatable about the first conveyor axis of rotation between an unloading position wherein the conveyor hopper is disposed below the main hopper discharge to receive agricultural product from the main hopper and a loading position wherein the conveyor discharge is disposed above the main hopper to dispense agricultural product into the main hopper.

**Infringement of the '123 Patent**

32. Defendant has manufactured, used, sold and/or offered for sale, and currently manufactures, uses, sells, and/or offers for sale products in and/or into the United States that infringe at least claim 1 of the '123 patent under United States law. Non-limiting examples of Defendant's products that infringe the '123 patent include Norwood's Seed Shuttle seed tenders, such as Seed Shuttle model numbers SS400 and SS500.

33. Norwood's Seed Shuttle seed tenders are a seed or grain tender including a main hopper having a main hopper discharge.

34. Norwood's Seed Shuttle seed tenders include a support arm having first and second ends.

35. Norwood's Seed Shuttle seed tenders include a first end of the support arm being located below the main hopper and being rotatable in relation about a first axis of rotation.

36. Norwood's Seed Shuttle seed tenders include a first end of the support arm being rotatable about a second axis of rotation that is perpendicular to the first axis of rotation.

37. Norwood's Seed Shuttle seed tenders include a conveyor having a longitudinal axis and first and second ends, a conveyor hopper at the first end, a conveyor discharge at the second end, and an internal elevator for moving seed or grain from the conveyor hopper to the conveyor discharge.

38. Norwood's Seed Shuttle seed tenders include a second end of the support arm that is coupled with the conveyor between the first and second ends of the conveyor.

39. Norwood's Seed Shuttle seed tenders include a conveyor that is rotatable about a third axis of rotation at the second end of the support arm that is not parallel to the conveyor longitudinal axis.

40. Norwood's Seed Shuttle seed tenders include a conveyor that is rotatable in relation to the second end of the support arm about the third axis of rotation between an unloading position wherein the conveyor hopper is disposed below the main hopper discharge to receive agricultural product from the main hopper and a loading position wherein the conveyor discharge is disposed above the main hopper to dispense agricultural product into the main hopper.

41. Norwood's Seed Shuttle seed tenders include a hydraulic piston extending at an acute angle relative to a horizontal plane to connect with a portion of the support arm spaced from the second axis of rotation.

42. Upon information and belief, Defendant reverse-engineered and copied Plaintiff's seed tender products when designing Defendant's Seed Shuttle seed tender products.

**COUNT 1**
**(Direct Infringement of the '047 Patent)**

43. Plaintiff repeats and re-alleges the allegations of Paragraphs 1-42 above, as if set forth herein.

44. Defendant has directly infringed and is directly infringing at least claim 1 of the '047 patent by making, using, offering for sale, and/or selling at least the aforementioned seed tender products, and will continue to do so unless enjoined by this Court.

45. Defendant's direct infringement of the '047 patent has damaged and will continue to damage Plaintiff and will continue to cause Plaintiff substantial and irreparable harm unless enjoined by this Court.

46. Defendant had knowledge of the '047 patent prior to the filing of this Complaint. Upon information and belief, Defendant has willfully infringed, and continues to willfully infringe, the '047 patent.

**COUNT 2**
**(Indirect Infringement of the '047 Patent)**

47. Plaintiff repeats and re-alleges the allegations of Paragraphs 1-46 above, as if set forth herein.

48. Norwood is inducing infringement of at least claim 1 of the '047 patent under 35 U.S.C. § 271(b) by actively encouraging third parties, such as equipment dealers, to offer for sale and sell the aforementioned seed tender products while knowing such offers for sale and sales constitute infringement. Norwood provides marketing and advertising information to equipment dealers to promote the infringing sales and offers for sale. Exemplary marketing and advertising materials are attached hereto as Exhibit E.

49. Norwood is also inducing infringement of at least claim 1 of the '047 patent under 35 U.S.C. § 271(b) by encouraging third parties, such as customers, to use the aforementioned seed tender products while knowing that such uses constitute infringement. Norwood provides product manuals to customers to encourage the infringing use. An exemplary product manual is attached hereto as Exhibit F.

50. After receiving the letter from Unverferth dated January 31, 2018 as set forth in Paragraph 16 above, Norwood has continued to actively encourage third parties, such as customers and equipment dealers, to infringe the '047 patent. The marketing and advertising information attached hereto as Exhibit E and the product manual attached hereto as Exhibit F continues to be made available to equipment dealers and customers after January 31, 2018.

51. Defendant's indirect infringement of the '047 patent has damaged and will continue to damage Plaintiff. Defendant's indirect infringement will also continue to cause Plaintiff substantial and irreparable harm unless enjoined by this Court.

52. Defendant had knowledge of the '047 patent prior to the filing of this Complaint. Upon information and belief, Defendant has willfully infringed, and continues to willfully infringe, the '047 patent.

**COUNT 3**
**(Direct Infringement of the '940 Patent)**

53. Plaintiff repeats and re-alleges the allegations of Paragraphs 1-52 above, as if set forth herein.

54. Defendant has directly infringed and is directly infringing at least claim 16 of the '940 patent by making, using, offering for sale, and/or selling at least the aforementioned seed tender products, and will continue to do so unless enjoined by this Court.

55. Defendant's direct infringement of the '940 patent has damaged and will continue to damage Plaintiff and will continue to cause Plaintiff substantial and irreparable harm unless enjoined by this Court.

56. Defendant had knowledge of the '940 patent prior to the filing of this Complaint. Upon information and belief, Defendant has willfully infringed, and continues to willfully infringe, the '940 patent.

**COUNT 4**
**(Indirect Infringement of the '940 Patent)**

57. Plaintiff repeats and re-alleges the allegations of Paragraphs 1-56 above, as if set forth herein.

58. Norwood is inducing infringement of at least claim 16 of the '940 patent under 35 U.S.C. § 271(b) by actively encouraging third parties, such as equipment dealers, to offer for sale and sell the aforementioned seed tender products while knowing such offers for sale and sales constitute infringement. Norwood provides marketing and advertising information to equipment dealers, and other incentives, to promote the infringing sales and offers for sale. Exemplary marketing and advertising materials are attached hereto as Exhibit E.

59. Norwood is also inducing infringement of at least claim 16 of the '940 patent under 35 U.S.C. § 271(b) by encouraging third parties, such as customers, to use the aforementioned seed tender products while knowing that such uses constitute infringement. Norwood provides product manuals to customers to encourage the infringing use. An exemplary product manual is attached hereto as Exhibit F.

60. After receiving the letter from Unverferth dated January 31, 2018 as set forth in Paragraph 16 above, Norwood has continued to actively encourage third parties, such as customers and equipment dealers, to infringe the '940 patent. The marketing and advertising

information attached hereto as Exhibit E and the product manual attached hereto as Exhibit F continues to be made available to equipment dealers and customers after January 31, 2018.

61. Defendant's indirect infringement of the '940 patent has damaged and will continue to damage Plaintiff. Defendant's indirect infringement will also continue to cause Plaintiff substantial and irreparable harm unless enjoined by this Court.

62. Defendant had knowledge of the '940 patent prior to the filing of this Complaint. Upon information and belief, Defendant has willfully infringed, and continues to willfully infringe, the '940 patent.

**COUNT 5**
**(Direct Infringement of the '123 Patent)**

63. Plaintiff repeats and re-alleges the allegations of Paragraphs 1-62 above, as if set forth herein.

64. Defendant has directly infringed and is directly infringing at least claim 1 of the '123 patent by making, using, offering for sale and/or selling at least the aforementioned seed tender products, and will continue to do so unless enjoined by this Court.

65. Defendant's direct infringement of the '123 patent has damaged and will continue to damage Plaintiff and will continue to cause Plaintiff substantial and irreparable harm unless enjoined by this Court.

66. Defendant had knowledge of the '123 patent prior to the filing of this Complaint. Upon information and belief, Defendant has willfully infringed, and continues to willfully infringe, the '123 patent.

**COUNT 6**
**(Indirect Infringement of the '123 Patent)**

67. Plaintiff repeats and re-alleges the allegations of Paragraphs 1-66 above, as if set forth herein.

68. Norwood is inducing infringement of at least claim 1 of the '123 patent under 35 U.S.C. § 271(b) by actively encouraging third parties, such as equipment dealers, to offer for sale and sell the aforementioned seed tender products while knowing such offers for sale and sales constitute infringement. Norwood provides marketing and advertising information to equipment dealers, and other incentives, to promote the infringing sales and offers for sale. Exemplary marketing and advertising materials are attached hereto as Exhibit E.

69. Norwood is also inducing infringement of at least claim 1 of the '123 patent under 35 U.S.C. § 271(b) by encouraging third parties, such as customers, to use the aforementioned seed tender products while knowing that such uses constitute infringement. Norwood provides product manuals to customers to encourage the infringing use. An exemplary product manual is attached hereto as Exhibit F.

70. After receiving the letter from Unverferth dated January 31, 2018 as set forth in Paragraph 16 above, Norwood has continued to actively encourage third parties, such as equipment dealers, to infringe the '123 patent. The marketing and advertising information attached hereto as Exhibit E and the product manual attached hereto as Exhibit F continues to be made available to equipment dealers and customers after January 31, 2018.

71. Defendant's indirect infringement of the '123 patent has damaged and will continue to damage Plaintiff. Defendant's indirect infringement will also continue to cause Plaintiff substantial and irreparable harm unless enjoined by this Court.

72. Defendant had knowledge of the '123 patent prior to the filing of this Complaint. Upon information and belief, Defendant has willfully infringed, and continues to willfully infringe, the '123 patent.

## PRAYER FOR RELIEF

WHEREFORE, Plaintiff prays that this Court enter judgment that:

A. The '047, '940, and '123 patents are valid and enforceable;

B. The '047, '940, and '123 patents are directly infringed by Defendant;

C. The '047, '940, and '123 patents are indirectly infringed by Defendant;

D. Defendant has willfully infringed the '047, '940, and '123 patents;

E. Defendant be permanently enjoined from manufacturing, using, selling and offering to sell the infringing products in the United States prior to the expiration of the '047, '940, and '123 patents;

F. Plaintiff be awarded damages adequate to compensate it for Defendant's infringement of the '047, '940, and '123 patents including lost profits, but in an amount no less than a reasonable royalty, and that such damages be trebled according to 35 U.S.C. § 284;

G. This case is exceptional within the meaning of 35 U.S.C. § 285, and that all costs and expenses of this action, including reasonable attorneys' fees, be awarded to Plaintiff; and

H. Plaintiff be awarded such further relief as the Court may deem just, necessary, and/or proper.

## JURY DEMAND

Plaintiff demands a trial by jury.

Dated: March 12, 2018

Respectfully submitted,

William P. Harrie, ND ID#04411
Nilles Law Firm
1800 Radisson Tower
201 North Fifth Street
P.O. Box 2626
Fargo, ND 58108-2626
Telephone: (701) 237-5544
E-Mail: wharrie@nilleslaw.com

Joseph A. Hynds
Brett A. Postal
ROTHWELL, FIGG, ERNST
& MANBECK, P.C.
607 14th Street, N.W., Suite 800
Washington, DC 20005
Telephone: (202) 783-6040
Facsimile: (202) 783-6031
jhynds@rfem.com
bpostal@rfem.com

*Attorneys for Plaintiff Unverferth Mfg. Co., Inc.*

# EXHIBIT A

US008221047B2

(12) **United States Patent**
**Petersen et al.**

(10) **Patent No.: US 8,221,047 B2**
(45) **Date of Patent: Jul. 17, 2012**

(54) **SEED CARRIER WITH PIVOTING CONVEYOR**

(75) Inventors: **Brian James Petersen**, Ottawa, OH (US); **David Richard Smith**, Fort Jennings, OH (US)

(73) Assignee: **Unverferth Manufacturing Company, Inc.**, Kalida, OH (US)

( * ) Notice: Subject to any disclaimer, the term of this patent is extended or adjusted under 35 U.S.C. 154(b) by 56 days.

(21) Appl. No.: **12/031,867**

(22) Filed: **Feb. 15, 2008**

(65) **Prior Publication Data**

US 2008/0210145 A1 Sep. 4, 2008

**Related U.S. Application Data**

(60) Provisional application No. 60/901,321, filed on Feb. 15, 2007.

(51) **Int. Cl.**
***B60P 1/00*** (2006.01)

(52) **U.S. Cl.** ..... **414/523**; 198/312

(58) **Field of Classification Search** ..... 414/523; 111/11; 198/312, 315, 316.1, 317, 318
See application file for complete search history.

(56) **References Cited**

U.S. PATENT DOCUMENTS

| | | | | | |
|---|---|---|---|---|---|
| 3,090,515 | A | | 5/1963 | Crowther | |
| 3,493,136 | A | | 2/1970 | Spellman, Jr. | |
| 3,498,483 | A | | 3/1970 | Meharry | |
| 3,968,771 | A | * | 7/1976 | Walgenbach et al. | 118/303 |
| 4,037,745 | A | | 7/1977 | Hengen et al. | |
| 4,411,581 | A | | 10/1983 | Niewold | |
| 4,503,803 | A | * | 3/1985 | Barnes | 118/303 |
| 4,742,938 | A | | 5/1988 | Niewold | |
| 5,520,495 | A | | 5/1996 | Sukup | |
| 5,529,455 | A | * | 6/1996 | Kaster et al. | 414/523 |
| 5,718,556 | A | | 2/1998 | Forsyth | |
| 5,800,116 | A | * | 9/1998 | Smith et al. | 414/523 |
| 5,888,044 | A | * | 3/1999 | Baskerville | 414/523 |
| 6,209,880 | B1 | * | 4/2001 | Turnwald et al. | 277/402 |
| 6,325,588 | B1 | * | 12/2001 | Nolin | 414/526 |
| 6,604,620 | B2 | * | 8/2003 | Dennis | 198/312 |
| 6,767,174 | B2 | * | 7/2004 | Cresswell | 414/523 |
| 7,393,275 | B2 | * | 7/2008 | Voss et al. | 460/114 |
| 7,488,149 | B2 | * | 2/2009 | Waldner | 414/532 |
| 7,500,817 | B2 | * | 3/2009 | Furrer et al. | 414/522 |
| 2003/0057055 | A1 | * | 3/2003 | Haukaas et al. | 198/313 |

OTHER PUBLICATIONS

Model 2300 Air System and the Model 4800 Air Drill, both made and sold by Concord, as illustrated in the Concord brochure, 12 pages.

* cited by examiner

*Primary Examiner* — Joshua Rudawitz
(74) *Attorney, Agent, or Firm* — Rothwell, Figg, Ernst & Manbeck, P.C.

(57) **ABSTRACT**

A seed carrier includes a main hopper coupled with a frame via leg members. The main hopper has a discharge. A base plate is coupled with the frame. A support arm is rotatably coupled with the base plate at a first end. A belt driven conveyor having a conveyor hopper at a first end and a discharge at a second end is rotatably coupled with a second end of said support arm at an approximate center of gravity thereof. A latch mechanism is provided for detachably coupling the first end of the conveyor with the first end of the support arm such that the conveyor hopper is position below the main hopper discharge. When the conveyor is uncoupled from the first end of the support arm, the conveyor can rotate to a loading position wherein the discharge thereof can be positioned over the main hopper.

**34 Claims, 11 Drawing Sheets**

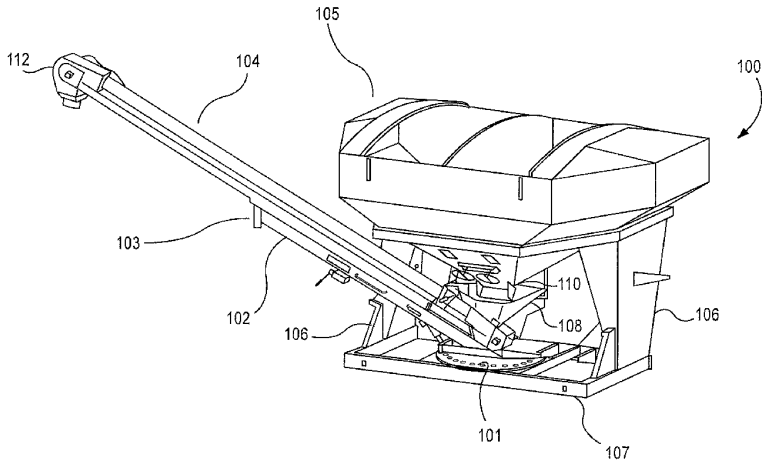

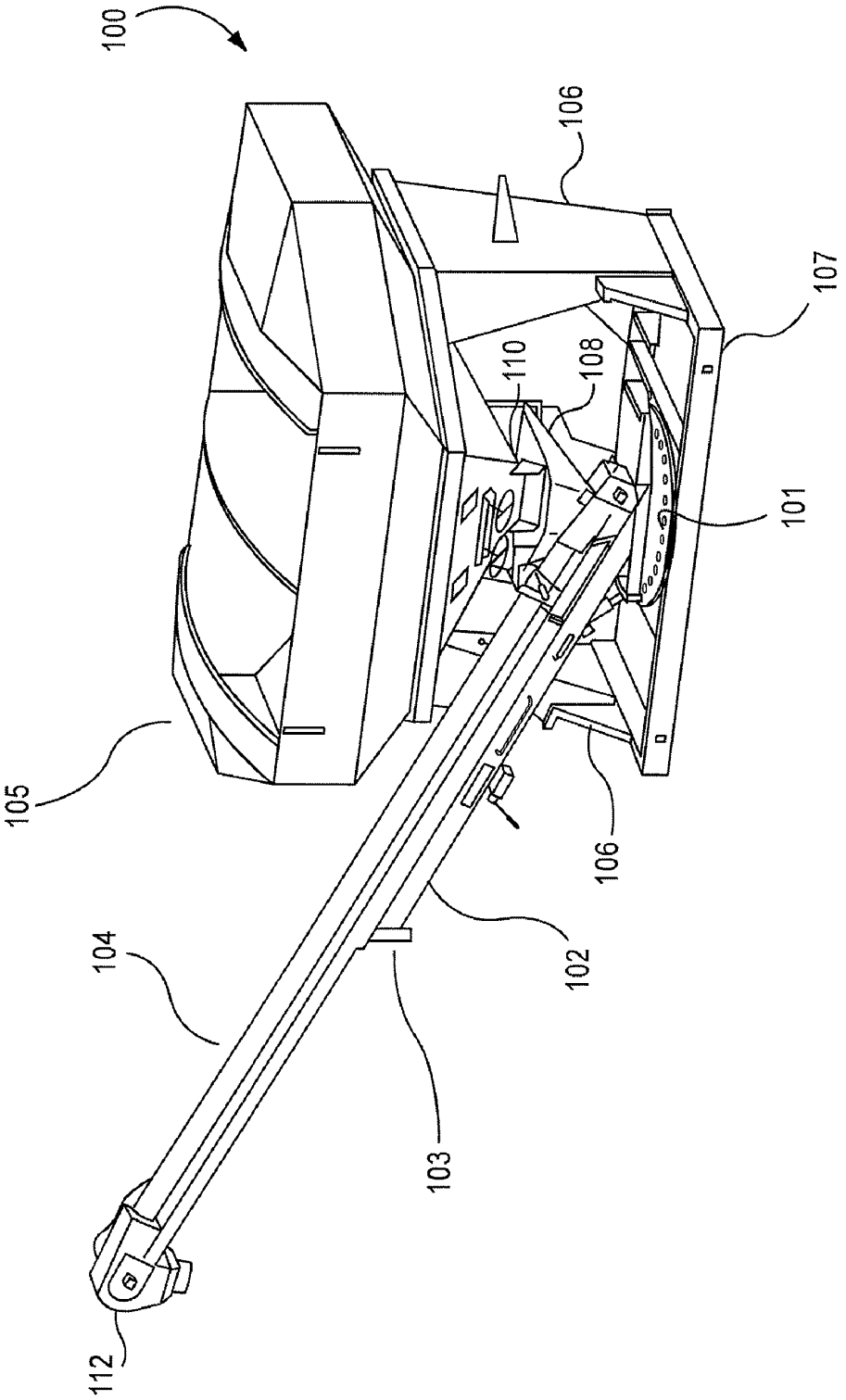


FIG. 1

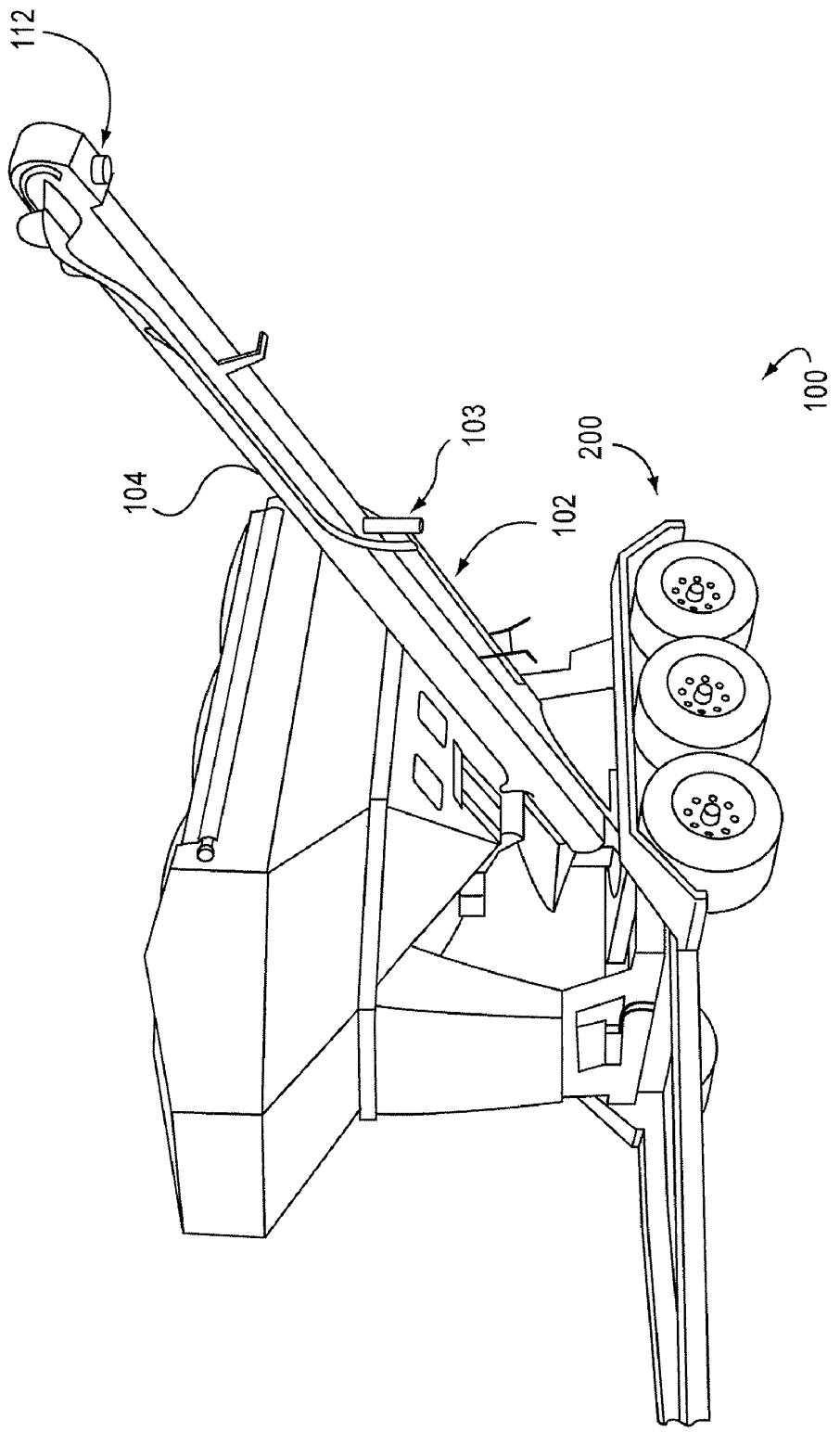


FIG.2

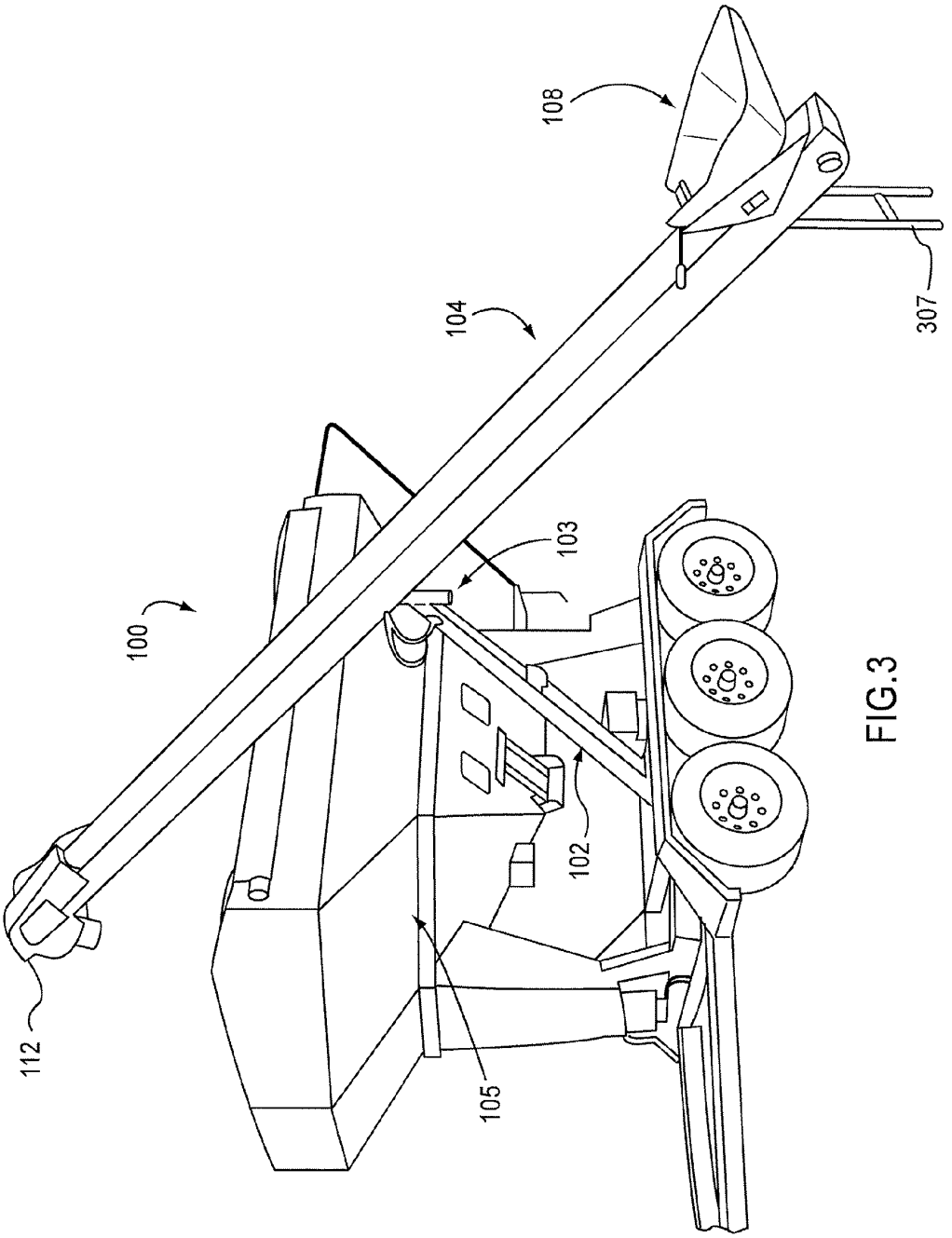


FIG.3

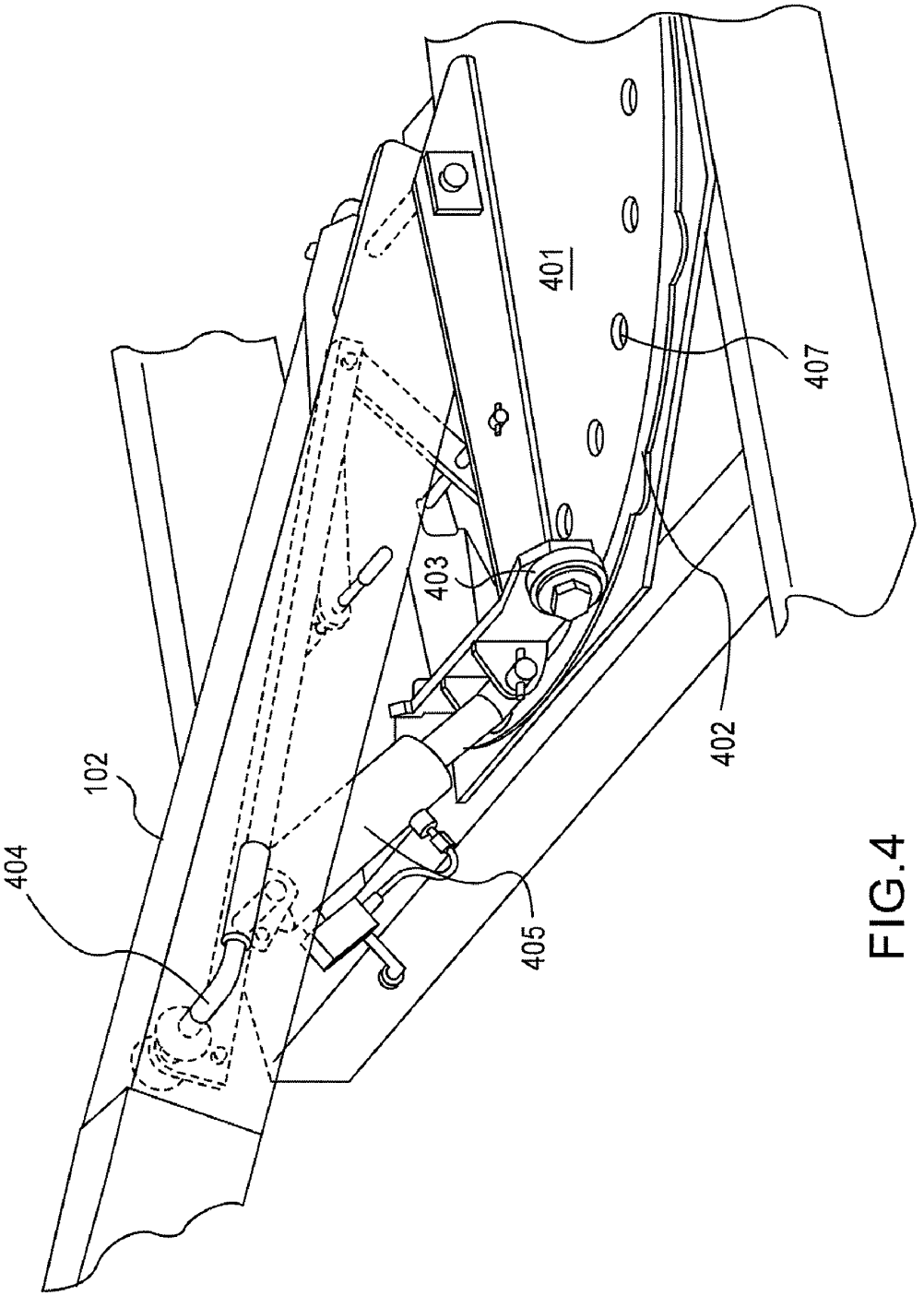


FIG.4

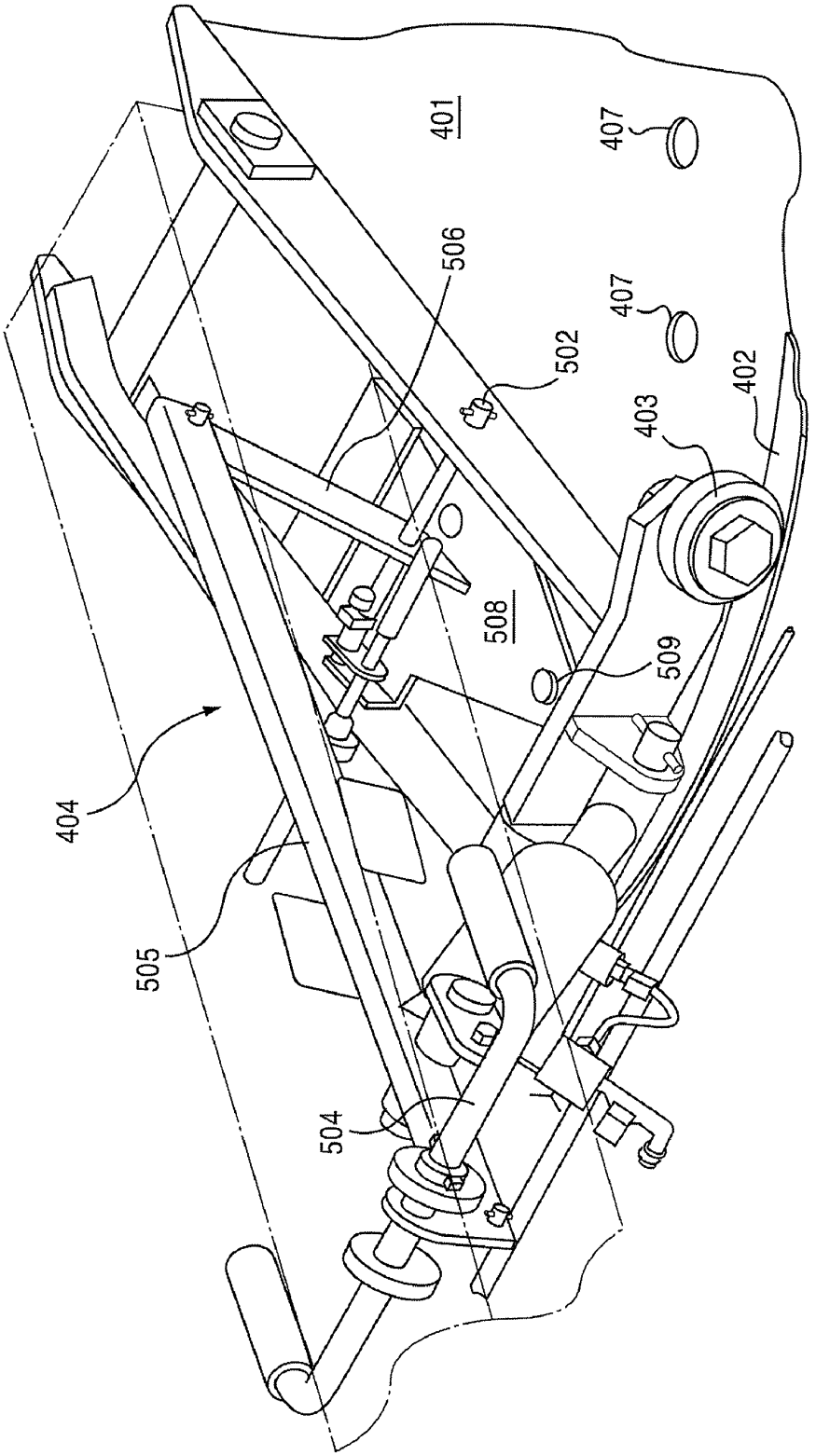


FIG.5

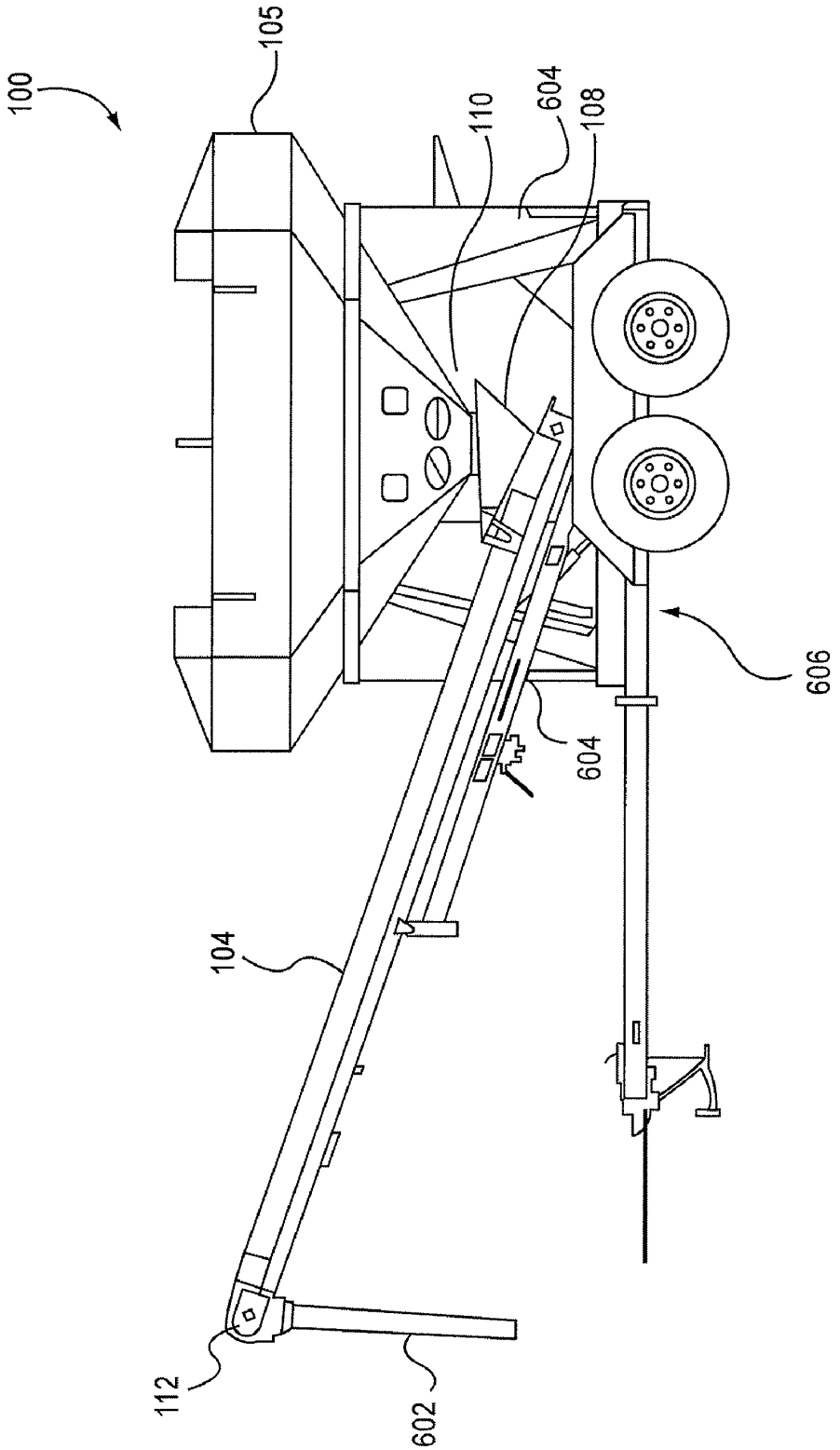


FIG.6

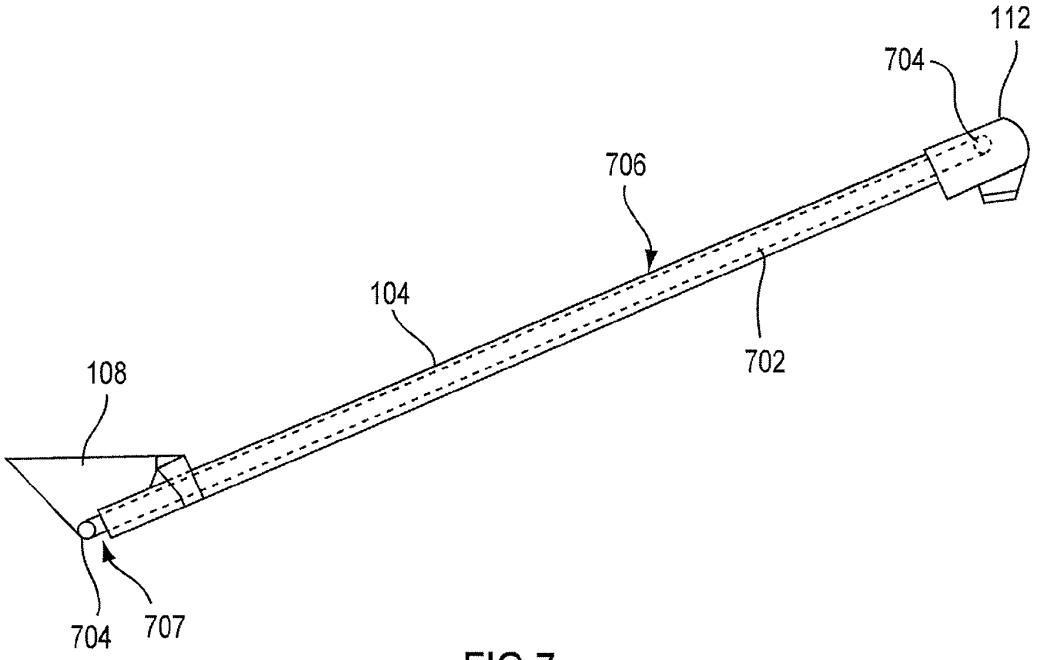


FIG.7

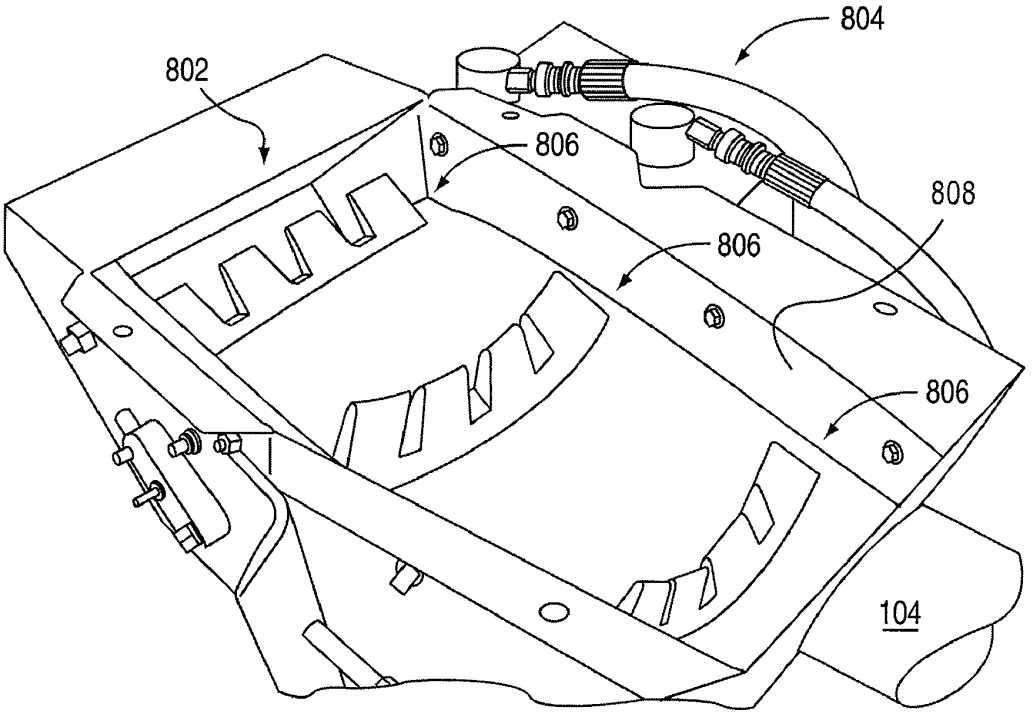


FIG.8

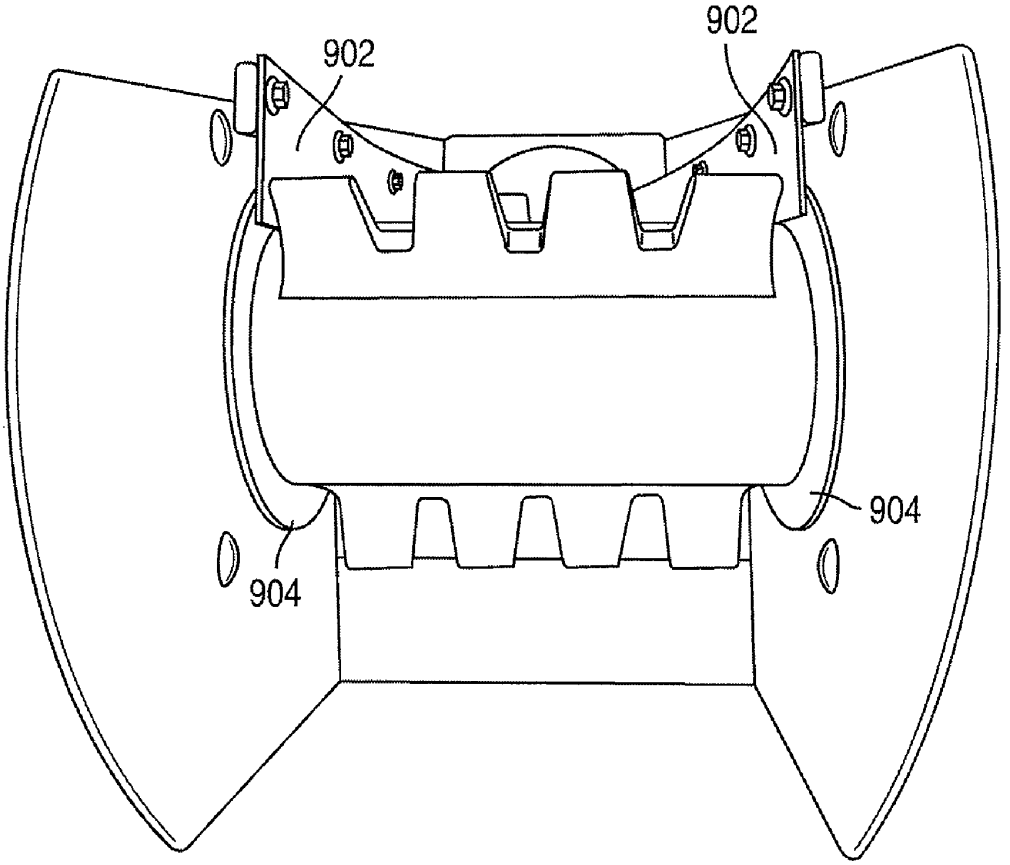


FIG.9

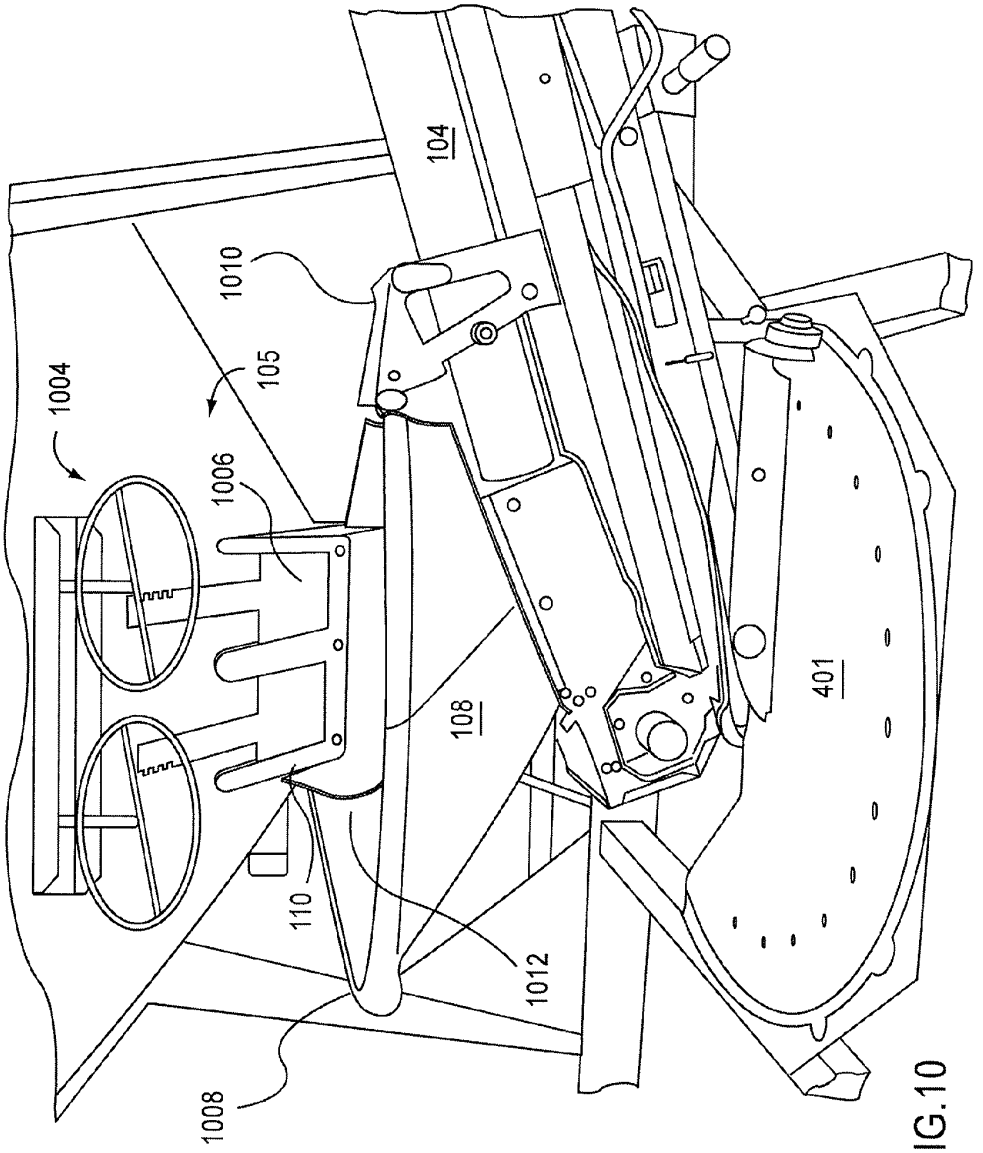


FIG.10

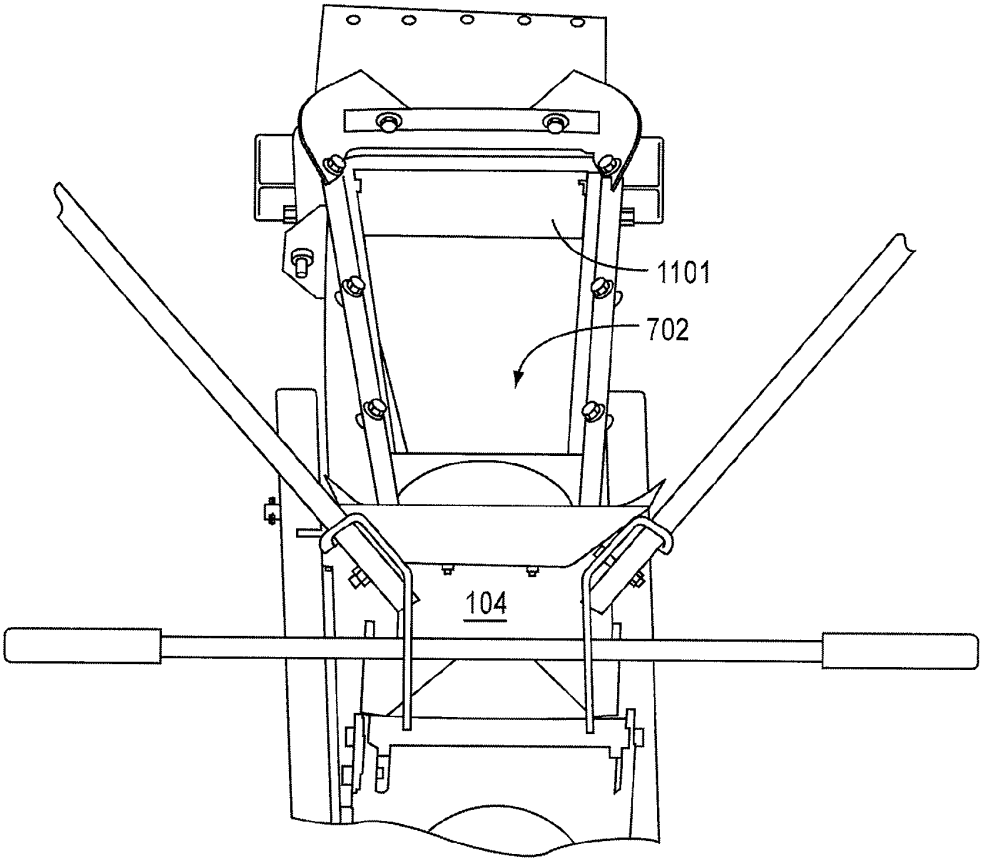


FIG.11

# SEED CARRIER WITH PIVOTING CONVEYOR

## CROSS-REFERENCE TO RELATED APPLICATION

The present application claims priority to Provisional Patent Application Ser. No. 60/901,321 filed on Feb. 15, 2007, the entire disclosure of which is incorporated herein by reference.

## BACKGROUND OF THE INVENTION

1. Field of the Invention

The present invention relates generally to a conveyor system for a grain or seed carrier. The conveyor system includes a novel pivot system that allows it to either load or unload a container by pivoting it into a loading or unloading position.

2. Description of the Related Art

Conveyor systems for moving grain, seed, etc. are well known. Auger systems are used to rapidly move grain such as feed or the like, while belt driven conveyors are often used for moving more expensive payload, such as seed.

One belt driven conveyor system includes a generally flat belt constructed from a flexible, sturdy material such as rubber or nylon. The conveyor is housed in a tube with rollers on both ends so that the belt may rotate in order to transmit material from one end to the other. Such conveyors are used for unloading seed carriers or the like. However, current conveyors have several problems.

First, current conveyors have the problem that the material being moved can be damaged by the rollers. Second, current conveyors do not have a full range of motion as implemented in seed carries. Third, current conveyors are only implemented for unloading.

There is a need for new and improved conveyor systems that allow a wagon to be unloaded and loaded using a single mechanism.

## SUMMARY OF THE INVENTION

According to an embodiment of the present invention, a seed tender or carrier is provided that includes a main hopper for holding seed and a conveyor for transferring seed to and from the main hopper.

According to an embodiment of the present invention, in an unloading position, one end of the conveyor may be positioned under the discharge of the main hopper and coupled with a pivoting support arm. In the unload position, the conveyor can be used to transfer seed from the main hopper to another location, such as to a planter, seeding unit, or the like. A pivot mechanism allows the conveyor to be rotated from under the box into a loading position in which the conveyor intake can rest on the ground or on a stand while the conveyor discharge is positioned to allow conveyed material to be discharged into the main hopper. In this loading position, the conveyor can be used to fill the main hopper.

According to an embodiment of the present invention, a conveyor hopper is provided on the intake side of the conveyor.

According to an embodiment of the present invention, the pivot mechanism allows the conveyor to swing from side to side to simplify unloading of the main hopper and the filling of planters, etc. The pivot mechanism can include a hydraulic cylinder that adjusts the vertical height of the conveyor discharge relative for different filling applications.



According to an embodiment of the present invention, a pivot single pivot point can be provided at one end of the support arm to allow the conveyor to be rotated between the loading and unloading position. The conveyor may be balanced on the pivot point at a location near or at the center of gravity, thereby permitting the conveyor to be rotated with minimal effort on the part of the operator.

According to an embodiment of the present invention, the conveyor can be rotated through at least 180 degrees about a vertical axis and so that it may be positioned in either a forward or rearward transport position. This feature enables the tender to be pulled by different vehicles such as by a pick-up truck with the conveyor forward or by a grain truck with the conveyor rearward.

Further applications and advantages of various aspects and embodiments of the present invention are discussed below with reference to the drawing figures.

## BRIEF DESCRIPTION OF THE DRAWINGS

FIG. **1** illustrates a seed carrier according to an embodiment of the present invention.

FIG. **2** is a view of a seed carrier in an unloading position according to an embodiment of the present invention.

FIG. **3** is a view of a seed carrier in a loading position according to an embodiment of the present invention.

FIG. **4** is a view of a base system for the seed carrier according to an embodiment of the present invention.

FIG. **5** is a view of a lever mechanism for the base system according to an embodiment of the present invention.

FIG. **6** is a view of a seed carrier in a transport position according to an embodiment of the present invention.

FIG. **7** is a view of a belt conveyor for the seed carrier according to an embodiment of the present invention.

FIG. **8** is a view of the discharge end of a conveyor according to an embodiment of the present invention.

FIG. **9** is a forward view of a conveyor belt wrapping around a roller according to an embodiment of the present invention.

FIG. **10** is a view of the conveyor hopper in an unloading position according to an embodiment of the present invention.

FIG. **11** illustrates the receiving end of the conveyor according to one embodiment of the present invention.

## DETAILED DESCRIPTION OF THE PREFERRED EMBODIMENTS

While the present invention may be embodied in many different forms, a number of illustrative embodiments are described herein with the understanding that the present disclosure is to be considered as providing examples of the principles of the invention and such examples are not intended to limit the invention to preferred embodiments described herein and/or illustrated herein.

In embodiments of the present invention, the novel conveyor pivot system can be implemented with seed carrier or seeding machines. The following section describes non-limiting examples of illustrative seeding equipment according to embodiments of the present invention. It should be appreciated that the following examples are provided for illustration and the present invention is not intended to be limited to the embodiments described herein.

FIG. **1** is a diagram depicting a seed carrier having a tube conveyor according to an embodiment of the present invention. The seed carrier **100** includes a main hopper **105** coupled to a frame **107** by legs **106**. A conveyor **104** is supported by a support arm **102** coupled with a pivoting mechanism **101**

fixed to the frame **107**. The conveyor **104** is pivotably coupled with the support arm by a coupling **103** at a point that is preferably near or at the center of gravity of the conveyor **104**. The conveyor **104** is also coupled to the support arm **102** by a latch (not shown) at the bottom of the conveyor. The latch allows the conveyor **104** to be uncoupled from the support arm **102** at the bottom so that the conveyor is free to rotate about the coupling **103**. By positioning the coupling **103** at or near the center of gravity of the conveyor **104**, the conveyor **104** balances on the pivoting coupling **103** such that little effort is required to rotate the conveyor **104**.

The conveyor **104** includes a conveyor hopper **108** at its base, which is shown in the unloading position below the gravity discharge **110** of the main hopper **105**. At the other end of the conveyor **104** is the discharge **112**. Seed can be gravity feed from the main hopper **105** into the conveyor hopper **108**, which can then be moved to the discharge **112** of the conveyor **104** by an internal elevator (not shown). In one embodiment, the elevator is a motor-driven belt type elevator coupled onto rollers at both ends of the conveyor.

The seed carrier **100** may be transported by conventional means such as on a trailer. FIG. **2** illustrates the seed carrier **100** on a three axle trailer **200** according to an embodiment of the present invention. As shown, the conveyor **104** is in the unloading position.

FIG. **3** illustrates the seed carrier **100** in the loading position. As shown, the conveyor **104** is uncoupled from the support arm **102** at its base and rotated 180 degrees about pivot coupling **103** so that the conveyor hopper **108** is positioned at a convenient location away from the carrier while the discharge **112** of the conveyor **104** is located over the main hopper **105**. A stand **307** is provided for holding the conveyor hopper **108** in place. The stand **307** may be integrated with the conveyor **104**.

Accordingly, in the loading position, grain, seed or like can be feed into the conveyor hopper **108** to be moved to the discharge **112** for filling the main hopper **105**.

FIG. **4** is a view of the pivoting base of the support arm **102**. As shown, the support arm **102** can be pivotably coupled to a base **401** at a center point so that the support arm **102** is rotatable about a vertical axis. Wheels **403** provide support and can run along a track **402** to facilitate the support arm's **102** motion about the perimeter of the base **401**. The support arm **102** can be locked into a selected position of the base **401** by engaging a pin (not shown) with one of a plurality of the holes **407** distributed around the base **401**. The pin is disengaged with a hole by actuating a lever mechanism **404**, which lifts the pin out of a hole. The lever mechanism **404** may be spring actuated to bias the pin toward the holes, so that simply releasing the lever will allow the pin to engage with one of the holes **407**. Also shown, a hydraulic piston **405** is coupled with the support arm **102** for adjusting the height of the support arm **102**.

FIG. **5** is an alternative view of the support arm base. As shown, lever mechanism **404** includes a handle **504** coupled with a cross-bars **505** and **506**. Cross-bar **506** is coupled to cross-bar **505** on one end and to a plate **508** having a pin **509** on the other end, and with a pivoting coupling **502** at a point near the plate. Rotating the handle **504** applies a downward force to crossbar **506** causing it to rotate about the coupling **502** to raise the plate **508** to disengage the pin **509**. While disengaged, the base **401** is free to rotate about its vertical axis. Springs may be provided for biasing the pin **509** toward the holes **407** for engaging therewith, or the pin **509** can be engaged by gravity.

FIG. **6** is a side view of a seed carrier **100** according to an embodiment of the present invention. As shown in FIG. **6**, the conveyor **104** includes an elongated discharge spout **602** and is positioned in a transport position. Support members **604** may be mounted on or integral with the legs **106** for holding the conveyor **104** in a forward transport position as shown, or a rearward transport position. As shown, the carrier **100** is fixed to a dual axle trailer **606**.

FIG. **7** illustrates a basic belt driven conveyor according to an embodiment of the present invention. The conveyor **104** comprises a belt **702** that winds about a pair of rollers **704**. The rollers are positioned outside a tube section **706**, a first roller being positioned in the discharge **112** and a second roller being positioned below the conveyor hopper **108**. A motor (not shown) or other means for turning the rollers may be provided at either end of the conveyor. A void **707** exists below the rollers **704** to allow the belt **702** to travel on its return path.

FIG. **8** is a view of a conveyor belt according to an embodiment of the present invention. The discharge end of a conveyor is shown where a conveyor belt wraps around a motor driven roller **802**. The motor may be a hydraulic motor and therefore, hydraulic hoses **804** provide hydraulic fluid flow to and from the motor. Teeth **806** are provided to push grain or seed up the conveyor. As shown, the conveyor belt is cupped in the tube section but flattens out as it reaches the roller **802**. Channeling members (seals) **808** are provided on each side of the belt to form a seal and prevent grain or seed from falling off the edges of the belt as the belt begins to conform to the tubular portion of the conveyor **104**.

FIG. **9** is a front view of the belt as it travels over the roller **802**. Channeling members (seals) **902** are provided on each side of the belt to form a seal and prevent grain or seed from falling off the edges of the belt as the belt flattens at the roller. As shown, the channeling members **902** are fixed to the conveyor discharge **112** with bolts, but can be fixed by other means or can be integral with the discharge.

Discs **904** are provided at the rollers at the edge of the belt to provide additional channeling/sealing means. The discs **904** are preferably integral with the rollers or coupled therewith so that they may rotate.

FIG. **10** is a side view of the hopper end of the conveyor **104**. As shown, conveyor hopper **108** sits above in ingress **1003** to the conveyor **104**. When coupled to the support arm **102**, as shown, the conveyor hopper **108** is positioned below a discharge of the main hopper **106**. The discharge **110** may be opened by conventional means. As showed, a wheel handle mechanism **1004** is provided for opening the discharge doors **1006**.

The conveyor hopper **108** is preferably manufactured from light weight materials such as plastic, canvas, rubber or vinyl. As shown, the hopper **108** may include a mechanism for opening and closing the hopper. In this embodiment, flexible coupling or hinge is provided at one end **1008** of the hopper **108** and a mechanism **1010** is provided at the end of the hopper **108** and is coupled with the conveyor **104**, such that the hopper **108** may be made to have an appropriate fit with the discharge **110** of the main hopper **105**. A flap **1012** can be provided at the bottom of the discharge **110**.

FIG. **10** is a side view of the hopper end of the conveyor **104**. As shown, conveyor hopper **108** sits above in ingress to the conveyor **104**. When coupled to the support arm **102**, as shown, the conveyor hopper **108** is positioned below a discharge of the main hopper **106**. The discharge **110** may be opened by conventional means. As showed, a wheel handle mechanism **1004** is provided for opening the discharge doors **1006**.

One will understand that hydraulic power can be provided by a towing vehicle, such as a tractor or the like or alterna-

tively, hydraulic power can be provided on the tender and driving electrically from the towing vehicle, such as a truck.

Thus, a number of preferred embodiments have been fully described above with reference to the drawing figures. Although the invention has been described based upon these preferred embodiments, it would be apparent to those of skill in the art that certain modifications, variations, and alternative constructions could be made to the described embodiments within the spirit and scope of the invention

We claim:

**1**. A seed or grain tender comprising:

a frame;

a main hopper mounted on said frame and having a main hopper discharge;

a base mounted on said frame below said main hopper discharge;

a support arm having first and second ends;

a first coupling connecting said first end of said support arm with said base, said first coupling being rotatable in relation to said base about a first vertical axis of rotation, and said first end of said support arm being rotatable in relation to said first coupling about a first horizontal axis of rotation;

a conveyor having a longitudinal axis and first and second ends, a conveyor hopper at said first end, a conveyor discharge at said second end, and an internal elevator for moving seed or grain from said conveyor hopper to said conveyor discharge; and

a second coupling connecting said second end of said support arm with said conveyor at an approximate center of gravity of said conveyor, said second coupling defining a second vertical axis of rotation that is not parallel to said conveyor longitudinal axis, and said conveyor being rotatable in relation to said second end of said support arm about said second vertical axis of rotation between an unloading position wherein said conveyor hopper is disposed below said main hopper discharge to receive agricultural product from said main hopper and a loading position wherein said conveyor discharge is disposed above said main hopper to dispense agricultural product into said main hopper.

**2**. The seed or grain tender of claim **1**, wherein said support arm extends upwardly at an acute angle from said base.

**3**. The seed or grain tender of claim **2**, wherein said conveyor is parallel to said support arm in said unloading position.

**4**. The seed or grain tender of claim **3**, wherein said conveyor is disposed above said support arm in said unloading position.

**5**. The seed or grain tender of claim **1**, wherein said conveyor is rotatable in relation to said second coupling about a second horizontal axis of rotation.

**6**. The seed or grain tender of claim **5**, wherein said second horizontal axis of rotation extends through said second coupling.

**7**. The seed or grain tender of claim **1**, further comprising a stand coupled with said first end of said conveyor and movable between a stowed position allowing said conveyor hopper to be positioned below said main hopper discharge when said conveyor is in said unloading position and an extended position supporting said conveyor hopper above the ground when said conveyor is in said loading position.

**8**. The seed or grain tender of claim **1**, wherein said first vertical axis extends through said first end of said support arm.

**9**. The seed or grain tender of claim **1**, wherein said first vertical axis extends through said base.

**10**. The seed or grain tender of claim **1**, wherein said second end of said support arm terminates at or near said approximate center of gravity of said conveyor.

**11**. The seed or grain tender of claim **1**, wherein said first end of said support arm is fixed at a first height and said second end of said support arm is pivotable between a range of heights.

**12**. The seed or grain tender of claim **1**, further comprising a lift device for adjusting a height of said second end of said support arm.

**13**. The seed or grain tender of claim **12**, wherein said lift device is a pressurized cylinder.

**14**. The seed or grain tender of claim **12**, wherein said lift device is a hydraulic cylinder.

**15**. The seed or grain tender of claim **1**, wherein said first coupling is a U-shaped member with a horizontal base portion and a pair of upright portions, and wherein said first horizontal axis extends through said upright portions of said first coupling.

**16**. The seed or grain tender of claim **1**, further comprising a locking mechanism for locking or unlocking said support arm in relation to said base.

**17**. The seed or grain tender of claim **16**, wherein said locking mechanism includes a pin releasably engageable with one of a plurality of holes formed in said base.

**18**. The seed or grain tender of claim **17**, wherein said pin is spring-biased toward said holes in said base.

**19**. The seed or grain tender of claim **17**, wherein said internal elevator includes a motor-driven belt.

**20**. A seed or grain tender comprising:

a frame;

a main hopper mounted on said frame and having a main hopper discharge;

a base mounted on said frame below said main hopper discharge;

a support arm having first and second ends;

a first coupling connecting said first end of said support arm with said base, said first coupling being rotatable in relation to said base about a first vertical axis of rotation, and said first end of said support arm being rotatable in relation to said first coupling about a first horizontal axis of rotation;

a lift device extending from said base to a portion of said support arm between said first and second ends such that said support arm extends upwardly at an acute angle from said base;

a conveyor having a longitudinal axis and first and second ends, a conveyor hopper at said first end, a conveyor discharge at said second end, and a motor-driven elevator for moving seed or grain from said conveyor hopper to said conveyor discharge; and

a second coupling connecting said second end of said support arm with said conveyor at an approximate center of gravity of said conveyor, said second coupling defining a second vertical axis of rotation that is not parallel to said conveyor longitudinal axis, and said conveyor being rotatable in relation to said second end of said support arm about said second vertical axis of rotation between an unloading position wherein said conveyor hopper is disposed below said main hopper discharge to receive agricultural product from said main hopper and a loading position wherein said conveyor discharge is disposed above said main hopper to dispense agricultural product into said main hopper, wherein said conveyor is disposed parallel to and above said support arm in said unloading position; and

a locking mechanism for locking and unlocking said support arm in relation to said base.

**21**. The seed or grain tender of claim **20**, wherein said conveyor is disposed above said support arm in said unloading position.

**22**. The seed or grain tender of claim **20**, wherein said conveyor is rotatable in relation to said second coupling about a second horizontal axis of rotation.

**23**. The seed or grain tender of claim **22**, wherein said second horizontal axis of rotation extends through said second coupling.

**24**. The seed or grain tender of claim **20**, further comprising a stand coupled with said first end of said conveyor and movable between a stowed position allowing said conveyor hopper to be positioned below said main hopper discharge when said conveyor is in said unloading position and an extended position supporting said conveyor hopper above the ground when said conveyor is in said loading position.

**25**. The seed or grain tender of claim **20**, wherein said first vertical axis extends through said first end of said support arm.

**26**. The seed or grain tender of claim **20**, wherein said first vertical axis extends through said base.

**27**. The seed or grain tender of claim **20**, wherein said second end of said support arm terminates at or near said approximate center of gravity of said conveyor.

**28**. The seed or grain tender of claim **20**, wherein said first end of said support arm is fixed at a first height and said second end of said support arm is pivotable between a range of heights.

**29**. The seed or grain tender of claim **20**, wherein said lift device is a pressurized cylinder.

**30**. The seed or grain tender of claim **20**, wherein said lift device is a hydraulic cylinder.

**31**. The seed or grain tender of claim **20**, wherein said first coupling is a U-shaped member with a horizontal base portion and a pair of upright portions, and

wherein said first horizontal axis extends through said upright portions of said first coupling.

**32**. The seed or grain tender of claim **20**, wherein said locking mechanism includes a pin releasably engageable with one of a plurality of holes formed in said base.

**33**. The seed or grain tender of claim **32**, wherein said pin is spring-biased toward said holes in said base.

**34**. The seed or grain tender of claim **20**, wherein said internal elevator includes a motor-driven belt.

* * * * *

# EXHIBIT B

US008967940B2

(12) **United States Patent**
**Petersen et al.**

(10) **Patent No.: US 8,967,940 B2**
(45) **Date of Patent: *Mar. 3, 2015**

(54) **SEED CARRIER WITH PIVOTING CONVEYOR**

(75) Inventors: **Brian James Petersen**, Ottawa, OH (US); **David Richard Smith**, Fort Jennings, OH (US)

(73) Assignee: **Unverferth Manufacturing Company, Inc.**, Kalida, OH (US)

( * ) Notice: Subject to any disclaimer, the term of this patent is extended or adjusted under 35 U.S.C. 154(b) by 0 days.

This patent is subject to a terminal disclaimer.

(21) Appl. No.: **13/541,553**

(22) Filed: **Jul. 3, 2012**

(65) **Prior Publication Data**

US 2013/0004271 A1 Jan. 3, 2013

**Related U.S. Application Data**

(63) Continuation of application No. 12/031,867, filed on Feb. 15, 2008, now Pat. No. 8,221,047.

(60) Provisional application No. 60/901,321, filed on Feb. 15, 2007.

(51) **Int. Cl.**
***B60P 1/00*** (2006.01)
***A01C 15/00*** (2006.01)

(52) **U.S. Cl.**
CPC ..... ***A01C 15/006*** (2013.01); *B60P 1/00* (2013.01); ***A01C 15/003*** (2013.01)
USPC ..... **414/523**; 198/312

(58) **Field of Classification Search**
CPC ..... B60P 1/00; B60P 1/36; B60P 1/42; B65G 41/002; B65G 41/005; B65G 41/008; B65G 67/02; A01C 15/003; A01C 15/006; A01D 90/00; A01D 90/02; A01D 90/10
USPC ..... 414/523, 328, 329; 111/11; 198/312, 198/315, 316, 317, 318
See application file for complete search history.

(56) **References Cited**

U.S. PATENT DOCUMENTS

427,736 A * 5/1890 Bufkin ..... 198/317
1,905,434 A * 4/1933 Boyer ..... 414/328

(Continued)

OTHER PUBLICATIONS

Model 2300 Air System and the Model 4800 Air Drill, both made and sold by Concord, as illustrated in the Concod brochure, 12 pages, 1994.

(Continued)

*Primary Examiner* — Saul Rodriguez
*Assistant Examiner* — Glenn Myers
(74) *Attorney, Agent, or Firm* — Rothwell, Figg, Ernst & Manbeck, P.C.

(57) **ABSTRACT**

A seed carrier includes a main hopper coupled with a frame via leg members. The main hopper has a discharge. A base plate is coupled with the frame. A support arm is rotatably coupled with the base plate at a first end. A belt driven conveyor having a conveyor hopper at a first end and a discharge at a second end is rotatably coupled with a second end of said support arm at an approximate center of gravity thereof. A latch mechanism is provided for detachably coupling the first end of the conveyor with the first end of the support arm such that the conveyor hopper is position below the main hopper discharge. When the conveyor is uncoupled from the first end of the support arm, the conveyor can rotate to a loading position wherein the discharge thereof can be positioned over the main hopper.

**23 Claims, 11 Drawing Sheets**

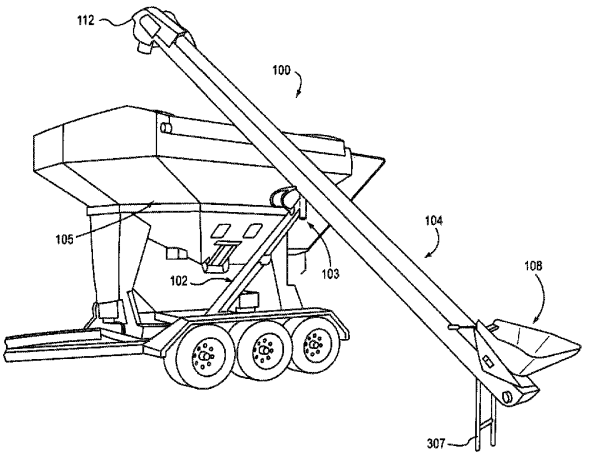

(56) **References Cited**

U.S. PATENT DOCUMENTS

| | | | | | |
|---|---|---|---|---|---|
| 3,090,515 | A | | 5/1963 | Crowther | |
| 3,493,136 | A | | 2/1970 | Spellman, Jr. | |
| 3,498,483 | A | * | 3/1970 | Meharry | 414/523 |
| 3,968,771 | A | * | 7/1976 | Walgenbach et al. | 118/303 |
| 3,994,512 | A | * | 11/1976 | Parker et al. | 280/687 |
| 3,997,215 | A | * | 12/1976 | Parker et al. | 298/24 |
| 4,037,745 | A | | 7/1977 | Hengen et al. | |
| 4,218,169 | A | | 8/1980 | Arends | |
| 4,274,790 | A | | 6/1981 | Barker | |
| 4,312,621 | A | | 1/1982 | Quanbeck et al. | |
| 4,411,581 | A | | 10/1983 | Niewold | |
| 4,419,037 | A | | 12/1983 | Neiwold | |
| 4,491,216 | A | | 1/1985 | Sawby | |
| 4,503,803 | A | * | 3/1985 | Barnes | 118/303 |
| 4,613,275 | A | | 9/1986 | Karlowsky | |
| 4,742,938 | A | | 5/1988 | Niewold | |
| 5,013,208 | A | | 5/1991 | Grieshop | |
| 5,468,113 | A | | 11/1995 | Davis | |
| 5,484,249 | A | * | 1/1996 | Klatt | 414/523 |
| 5,516,253 | A | | 5/1996 | Linscheid et al. | |
| 5,520,495 | A | * | 5/1996 | Sukup | 414/523 |
| 5,529,455 | A | | 6/1996 | Kaster et al. | |
| 5,538,388 | A | | 7/1996 | Bergkamp et al. | |
| 5,582,221 | A | | 12/1996 | Smith et al. | |
| 5,615,990 | A | * | 4/1997 | Grieshop | 414/526 |
| 5,718,556 | A | * | 2/1998 | Forsyth | 414/503 |
| 5,785,481 | A | | 7/1998 | Ockels | |
| 5,800,116 | A | * | 9/1998 | Smith et al. | 414/523 |
| 5,888,044 | A | * | 3/1999 | Baskerville | 414/523 |
| 5,980,189 | A | | 11/1999 | Rubner | |
| 6,113,339 | A | | 9/2000 | Adams | |
| 6,120,233 | A | * | 9/2000 | Adam | 414/502 |
| 6,209,880 | B1 | * | 4/2001 | Turnwald et al. | 277/402 |
| 6,325,588 | B1 | * | 12/2001 | Nolin | 414/526 |
| 6,604,620 | B2 | * | 8/2003 | Dennis | 198/312 |
| 6,767,174 | B2 | * | 7/2004 | Cresswell | 414/523 |
| 6,908,380 | B2 | | 6/2005 | Silver | |
| 7,223,059 | B2 | | 5/2007 | Smith et al. | |
| 7,267,519 | B2 | | 9/2007 | Cresswell et al. | |
| 7,393,275 | B2 | | 7/2008 | Voss et al. | |
| 7,428,956 | B2 | * | 9/2008 | Scherman | 198/312 |
| 7,488,149 | B2 | * | 2/2009 | Waldner | 414/532 |
| 7,500,814 | B2 | | 3/2009 | Meyer | |
| 7,500,817 | B2 | * | 3/2009 | Furrer et al. | 414/522 |
| 7,553,228 | B2 | | 6/2009 | Dillon | |
| 8,221,047 | B2 | * | 7/2012 | Petersen et al. | 414/523 |
| 2003/0057055 | A1 | * | 3/2003 | Haukaas et al. | 198/313 |
| 2006/0180062 | A1 | | 8/2006 | Furrer et al. | |
| 2009/0110524 | A1 | * | 4/2009 | Hoffmann | 414/507 |

OTHER PUBLICATIONS

Convey-All, BTS 290 Seed Tender Product Specification, 2 pages, Jun. 6, 2006.

Convey-All Ind. Inc., Engineering Drawings of BT-1500, 4 pages, May 13, 2002.

Par-Kan Company, Engineering Drawings, 2 pages, Apr. 28, 2003.

Great Plains Manufacturing, Inc., Parts Manual—Model ADC2220 Air Drill Cart, May 1, 1997, 61 pages.

Great Plains Manufacturing, Inc., Parts Manual—Model ADC2220 Air Drill Cart, Mar. 1, 2000, 69 pages.

Reexamination File History for Control No. 95000691, 374 pages.

Order Denying Request for Inter Panes Reexamination for Control No. 95000691, Nov. 7, 2012, 15 pages.

Par-Kan Company, Final Invalidity Contentions submitted in *Unverferth Mfg. Co., Inc.* v. *Par-Kan Co.*, Civil Action No. 13-cv-00097 (N.D. Ind.), Oct. 25, 2013, 130 pages.

Par-Kan Company, Preliminary Invalidity Contentions submitted in *Unverferth Mfg. Co., Inc.* v. *Par-Kan Co.*, Civil Action No. 13-cv-00097 (N.D. Ind.), Jun. 17, 2013, 169 pages.

Declaration of Shawn Gerdeman with Exhibits A-E dated Sep. 18, 2014, 24 pages.

* cited by examiner

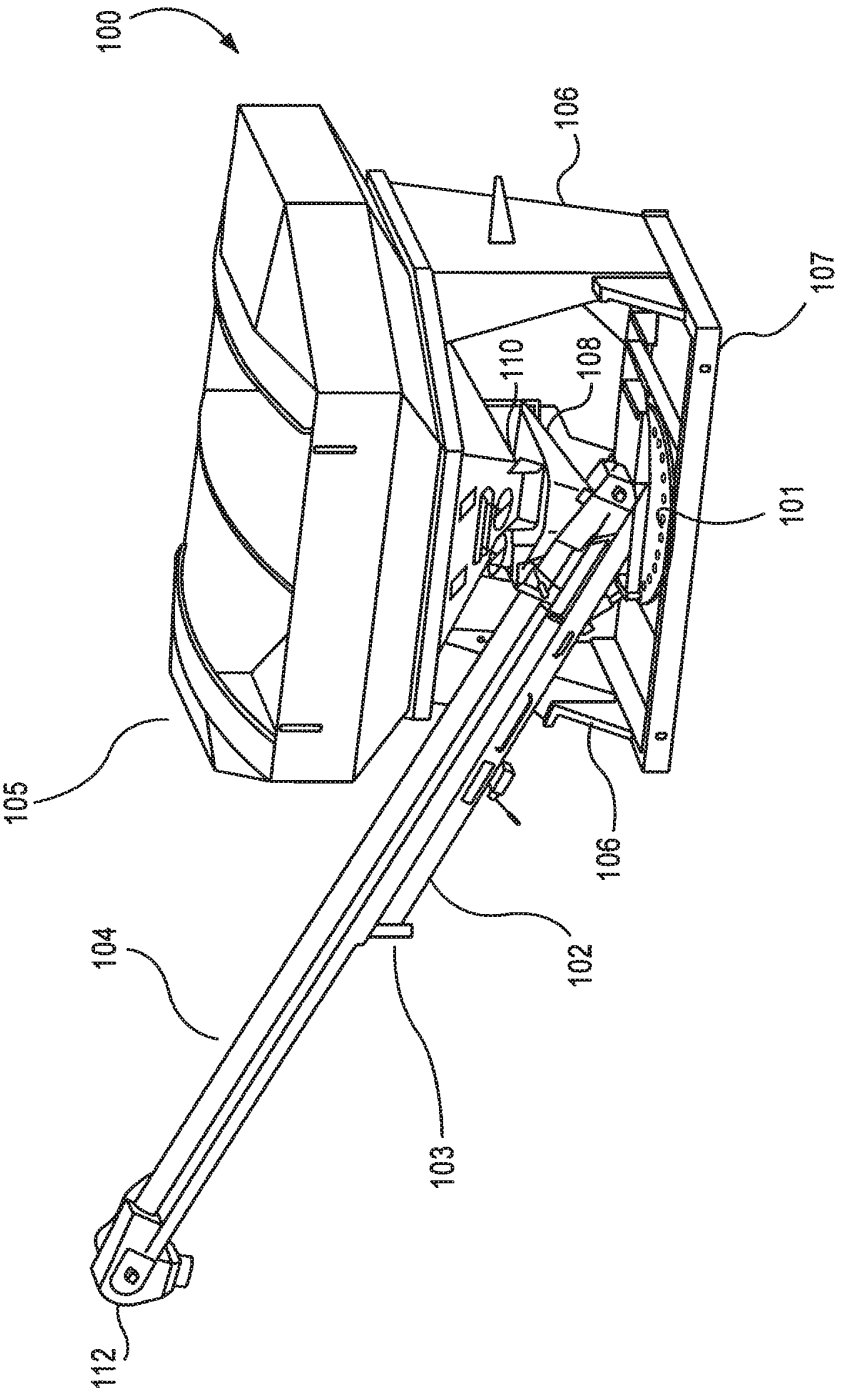


FIG.1

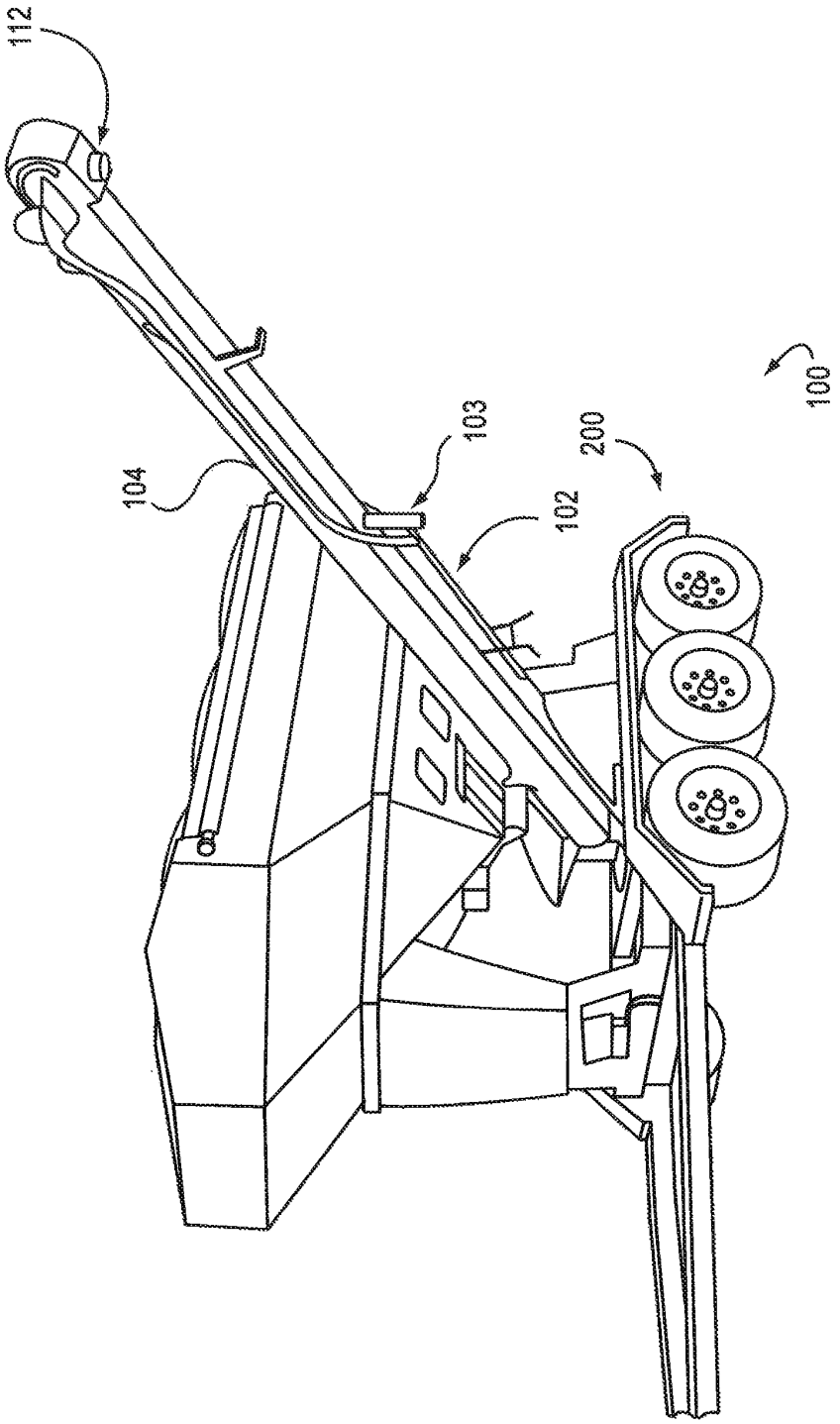


FIG.2

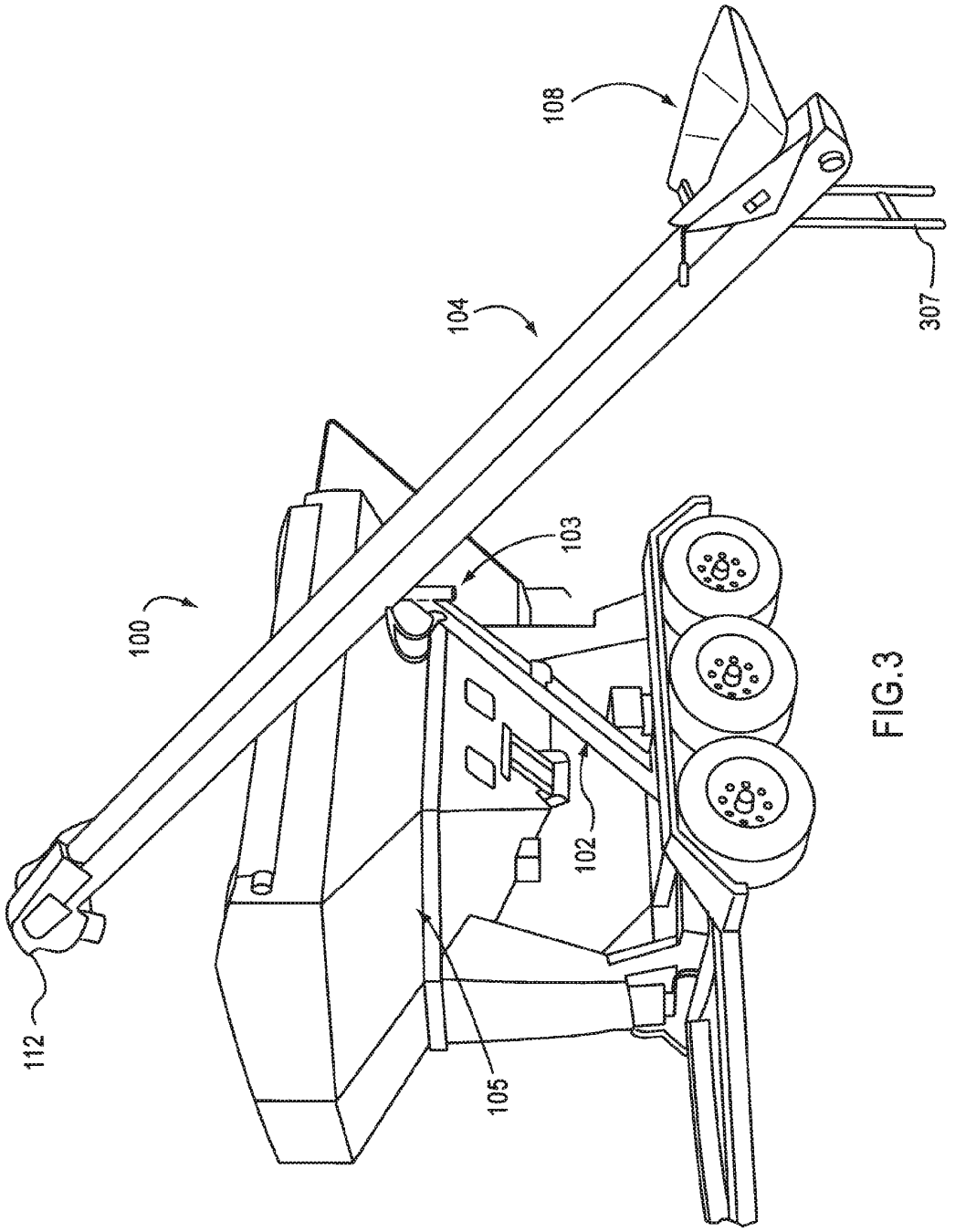


FIG.3

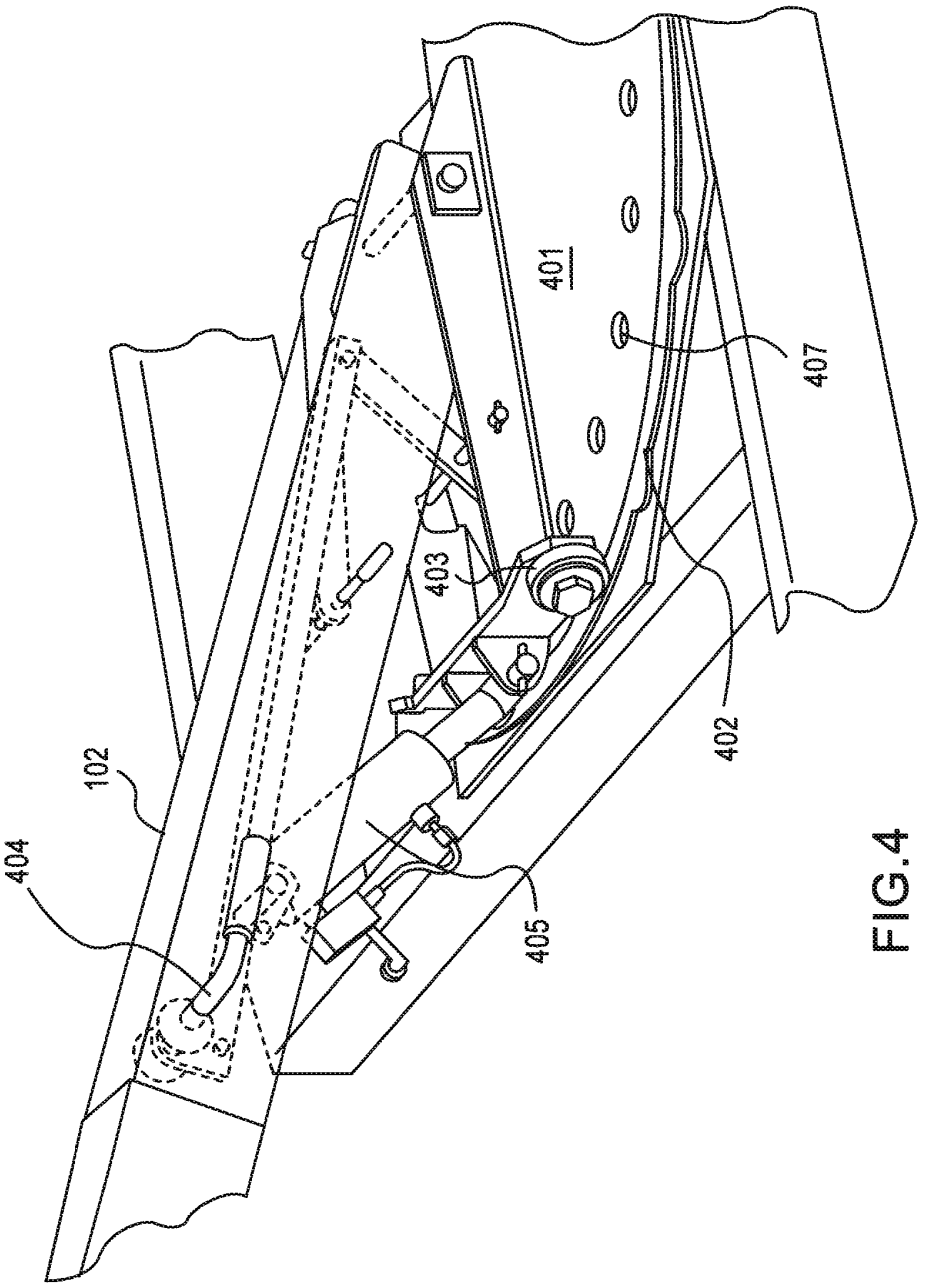


FIG.4

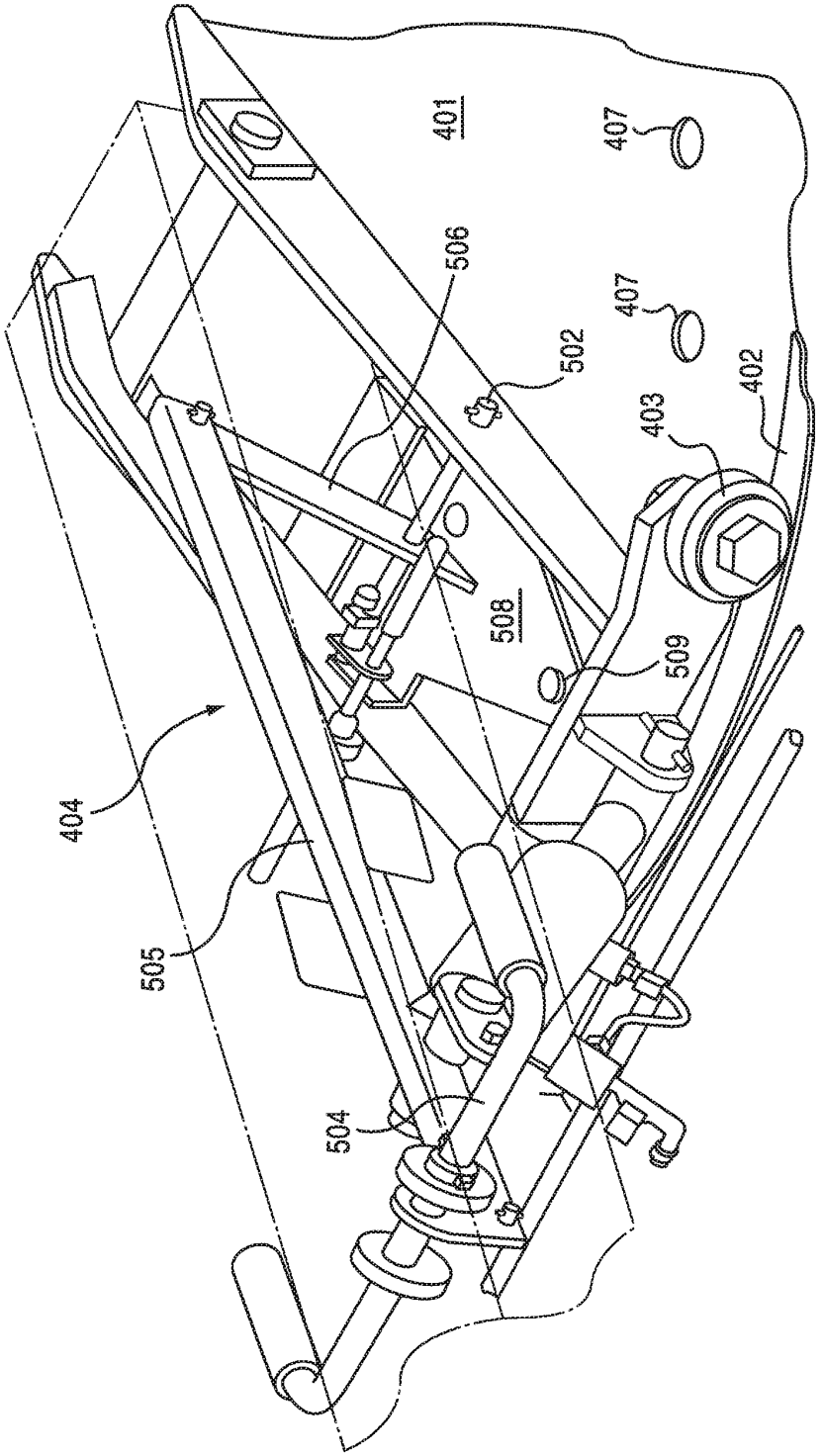


FIG.5

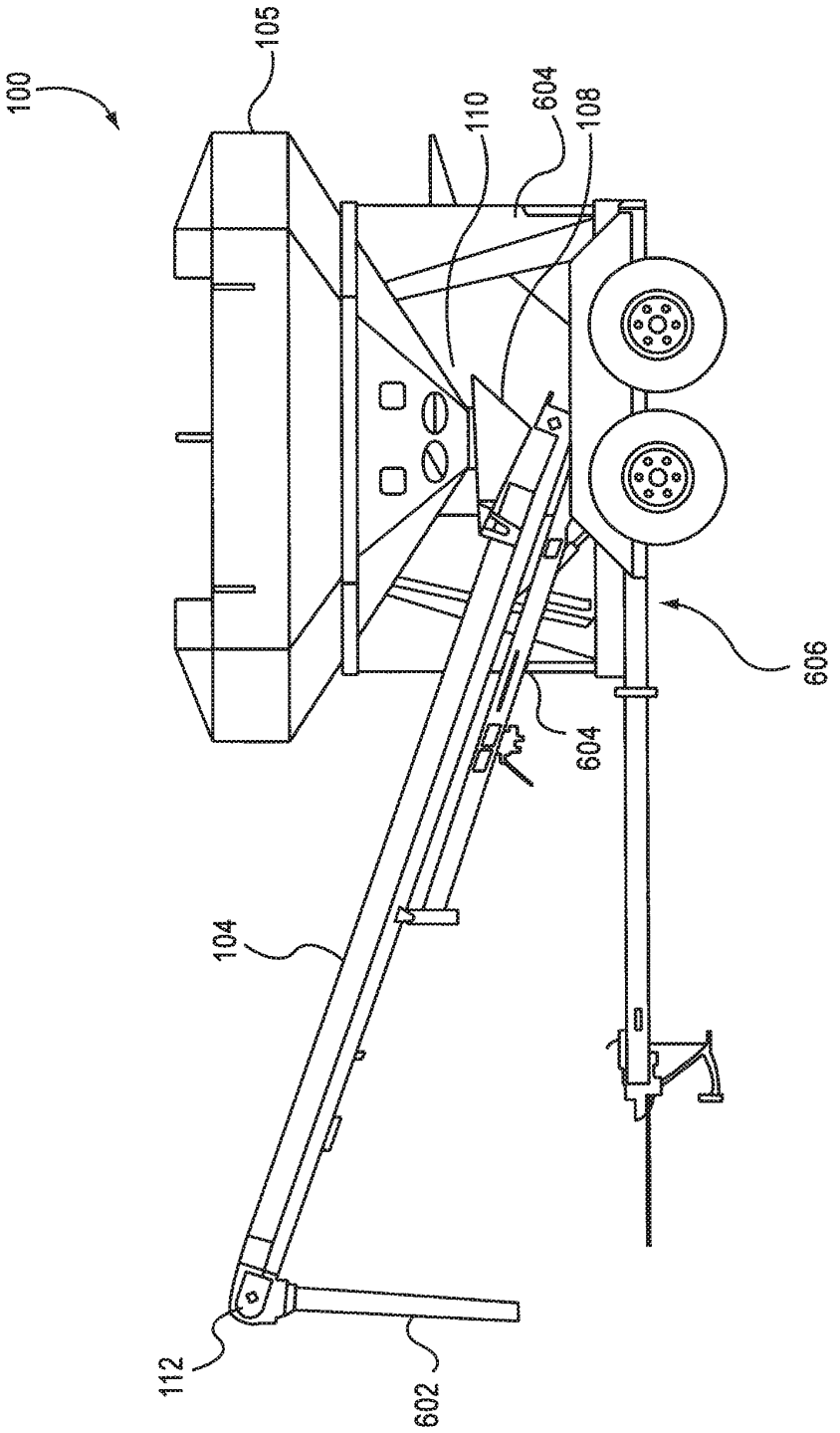


FIG.6

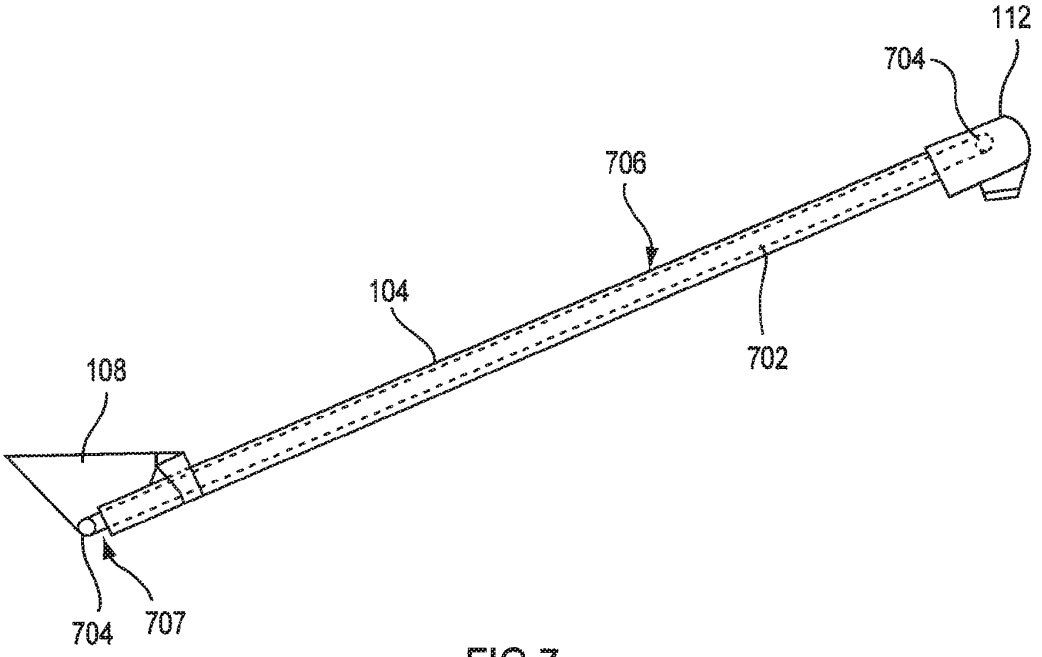


FIG.7

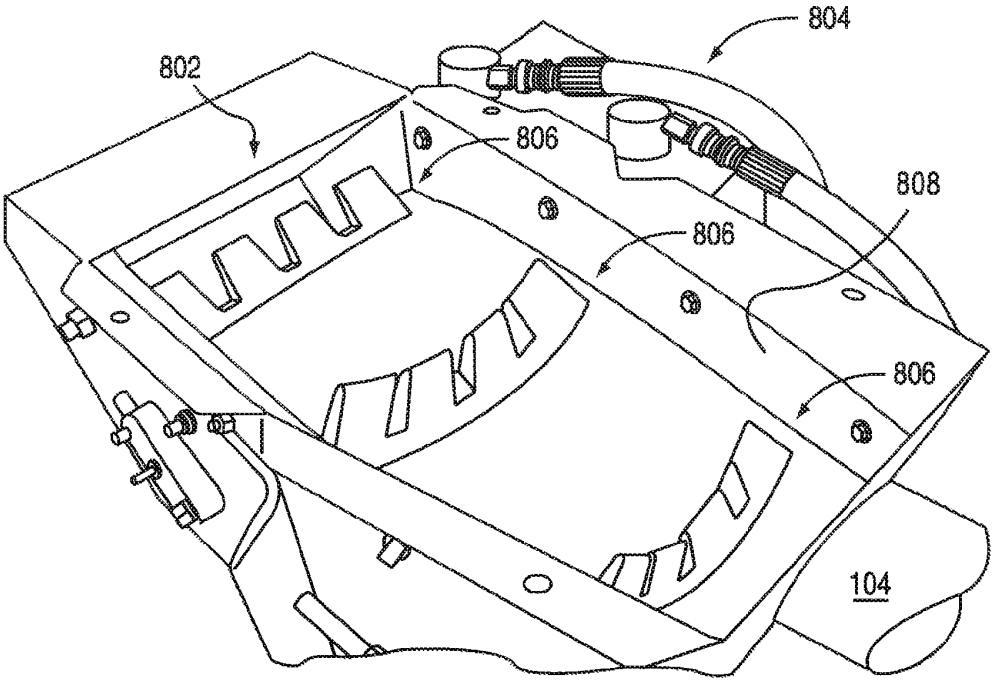


FIG.8

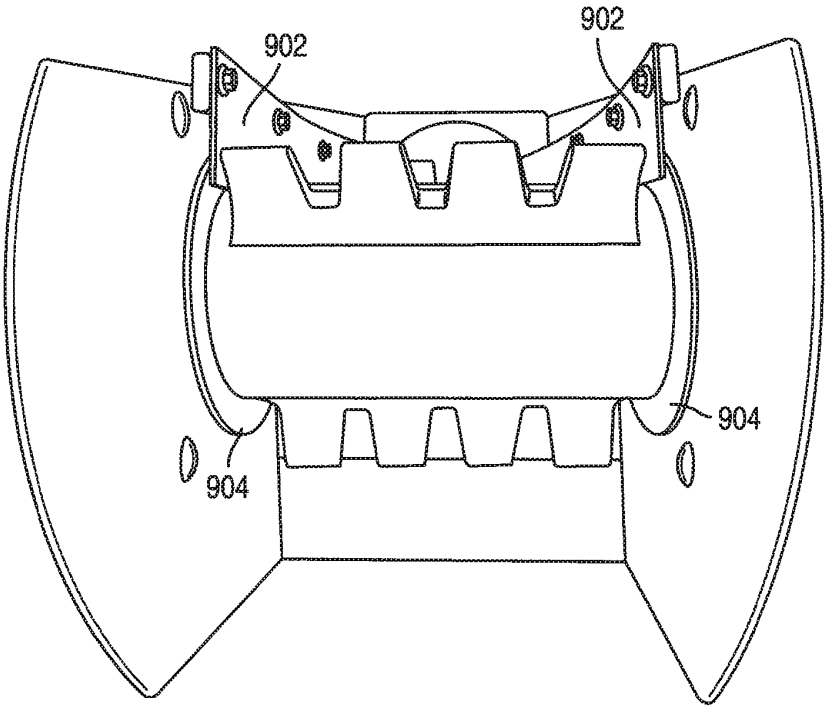


FIG.9

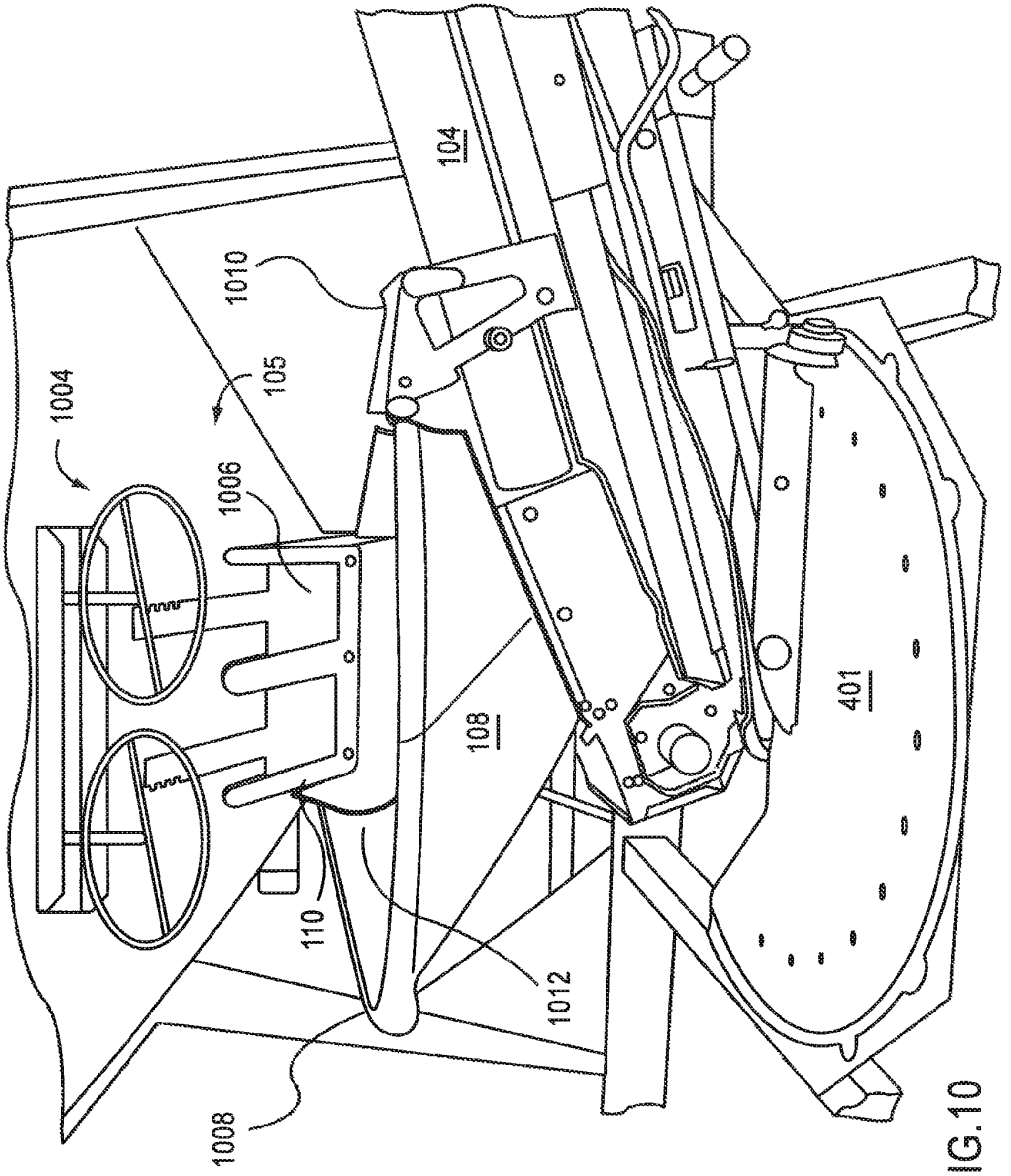


FIG.10

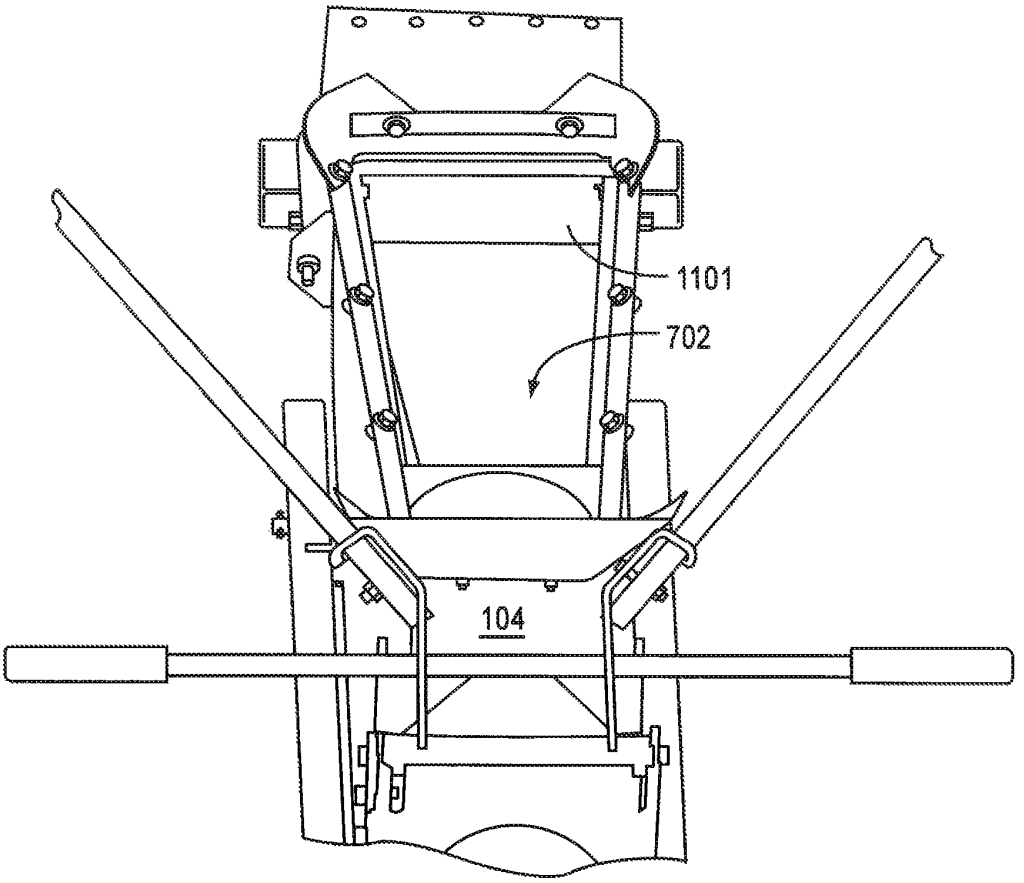


FIG.11

# SEED CARRIER WITH PIVOTING CONVEYOR

## CROSS-REFERENCE TO RELATED APPLICATION

The present application claims priority to U.S. Ser. No. 12/031,867, filed Feb. 15, 2008, now patented, and claims priority to Provisional Patent Application Ser. No. 60/901,321 filed on Feb. 15, 2007, the entire disclosure of which is incorporated herein by reference.

## BACKGROUND OF THE INVENTION

1. Field of the Invention

The present invention relates generally to a conveyor system for a grain or seed carrier. The conveyor system includes a novel pivot system that allows it to either load or unload a container by pivoting it into a loading or unloading position.

2. Description of the Related Art

Conveyor systems for moving grain, seed, etc. are well known. Auger systems are used to rapidly move grain such as feed or the like, while belt driven conveyors are often used for moving more expensive payload, such as seed.

One belt driven conveyor system includes a generally flat belt constructed from a flexible, sturdy material such as rubber or nylon. The conveyor is housed in a tube with rollers on both ends so that the belt may rotate in order to transmit material from one end to the other. Such conveyors are used for unloading seed carriers or the like. However, current conveyors have several problems.

First, current conveyors have the problem that the material being moved can be damaged by the rollers. Second, current conveyors do not have a full range of motion as implemented in seed carries. Third, current conveyors are only implemented for unloading,

There is a need for new and improved conveyor systems that allow a wagon to be unloaded and loaded using a single mechanism.

## SUMMARY OF THE INVENTION

According to an embodiment of the present invention, a seed tender or carrier is provided that includes a main hopper for holding seed and a conveyor for transferring seed to and from the main hopper.

According to an embodiment of the present invention, in an unloading position, one end of the conveyor may be positioned under the discharge of the main hopper and coupled with a pivoting support arm. In the unload position, the conveyor can be used to transfer seed from the main hopper to another location, such as to a planter, seeding unit, or the like. A pivot mechanism allows the conveyor to be rotated from under the box into a loading position in which the conveyor intake can rest on the ground or on a stand while the conveyor discharge is positioned to allow conveyed material to be discharged into the main hopper. In this loading position, the conveyor can be used to fill the main hopper.

According to an embodiment of the present invention, a conveyor hopper is provided on the intake side of the conveyor.

According to an embodiment of the present invention, the pivot mechanism allows the conveyor to swing from side to side to simplify unloading of the main hopper and the filling of planters, etc. The pivot mechanism can include a hydraulic cylinder that adjusts the vertical height of the conveyor discharge relative for different filling applications.



According to an embodiment of the present invention, a pivot single pivot point can be provided at one end of the support arm to allow the conveyor to be rotated between the loading and unloading position. The conveyor may be balanced on the pivot point at a location near or at the center of gravity, thereby permitting the conveyor to be rotated with minimal effort on the part of the operator.

According to an embodiment of the present invention, the conveyor can be rotated through at least 180 degrees about a vertical axis and so that it may be positioned in either a forward or rearward transport position. This feature enables the tender to be pulled by different vehicles such as by a pick-up truck with the conveyor forward or by a grain truck with the conveyor rearward.

Further applications and advantages of various aspects and embodiments of the present invention are discussed below with reference to the drawing figures.

## BRIEF DESCRIPTION OF THE DRAWINGS

FIG. **1** illustrates a seed carrier according to an embodiment of the present invention.

FIG. **2** is a view of a seed carrier in an unloading position according to an embodiment of the present invention.

FIG. **3** is a view of a seed carrier in a loading position according to an embodiment of the present invention.

FIG. **4** is a view of a base system for the seed carrier according to an embodiment of the present invention.

FIG. **5** is a view of a lever mechanism for the base system according to an embodiment of the present invention.

FIG. **6** is a view of a seed carrier in a transport position according to an embodiment of the present invention.

FIG. **7** is a view of a belt conveyor for the seed carrier according to an embodiment of the present invention.

FIG. **8** is a view of the discharge end of a conveyor according to an embodiment of the present invention.

FIG. **9** is a forward view of a conveyor belt wrapping around a roller according to an embodiment of the present invention.

FIG. **10** is a view of the conveyor hopper in an unloading position according to an embodiment of the present invention.

FIG. **11** illustrates the receiving end of the conveyor according to one embodiment of the present invention.

## DETAILED DESCRIPTION OF THE PREFERRED EMBODIMENTS

While the present invention may be embodied in many different forms, a number of illustrative embodiments are described herein with the understanding that the present disclosure is to be considered as providing examples of the principles of the invention and such examples are not intended to limit the invention to preferred embodiments described herein and/or illustrated herein.

In embodiments of the present invention, the novel conveyor pivot system can be implemented with seed carrier or seeding machines. The following section describes non-limiting examples of illustrative seeding equipment according to embodiments of the present invention. It should be appreciated that the following examples are provided for illustration and the present invention is not intended to be limited to the embodiments described herein.

FIG. **1** is a diagram depicting a seed carrier having a tube conveyor according to an embodiment of the present invention. The seed carrier **100** includes a main hopper **105** coupled to a frame **107** by legs **106**. A conveyor **104** is supported by a support arm **102** coupled with a pivoting mechanism **101**

fixed to the frame **107**. The conveyor **104** is pivotably coupled with the support arm by a coupling **103** at a point that is preferably near or at the center of gravity of the conveyor **104**. The conveyor **104** is also coupled to the support arm **102** by a latch (not shown) at the bottom of the conveyor. The latch allows the conveyor **104** to be uncoupled from the support arm **102** at the bottom so that the conveyor is free to rotate about the coupling **103**. By positioning the coupling **103** at or near the center of gravity of the conveyor **104**, the conveyor **104** balances on the pivoting coupling **103** such that little effort is required to rotate the conveyor **104**.

The conveyor **104** includes a conveyor hopper **108** at its base, which is shown in the unloading position below the gravity discharge **110** of the main hopper **105**. At the other end of the conveyor **104** is the discharge **112**. Seed can be gravity feed from the main hopper **105** into the conveyor hopper **108**, which can then be moved to the discharge **112** of the conveyor **104** by an internal elevator (not shown). In one embodiment, the elevator is a motor-driven belt type elevator coupled onto rollers at both ends of the conveyor.

The seed carrier **100** may be transported by conventional means such as on a trailer. FIG. **2** illustrates the seed carrier **100** on a three axle trailer **200** according to an embodiment of the present invention. As shown, the conveyor **104** is in the unloading position.

FIG. **3** illustrates the seed carrier **100** in the loading position. As shown, the conveyor **104** is uncoupled from the support arm **102** at its base and rotated **180** degrees about pivot coupling **103** so that the conveyor hopper **108** is positioned at a convenient location away from the carrier while the discharge **112** of the conveyor **104** is located over the main hopper **105**. A stand **307** is provided for holding the conveyor hopper **108** in place. The stand **307** may be integrated with the conveyor **104**.

Accordingly, in the loading position, grain, seed or like can be feed into the conveyor hopper **108** to be moved to the discharge **112** for filling the main hopper **105**.

FIG. **4** is a view of the pivoting base of the support arm **102**. As shown, the support arm **102** can be pivotably coupled to a base **401** at a center point so that the support arm **102** is rotatable about a vertical axis. Wheels **403** provide support and can run along a track **402** to facilitate the support arm's **102** motion about the perimeter of the base **401**. The support arm **102** can be locked into a selected position of the base **401** by engaging a pin (not shown) with one of a plurality of the holes **407** distributed around the base **401**. The pin is disengaged with a hole by actuating a lever mechanism **404**, which lifts the pin out of a hole. The lever mechanism **404** may be spring actuated to bias the pin toward the holes, so that simply releasing the lever will allow the pin to engage with one of the holes **407**. Also shown, a hydraulic piston **405** is coupled with the support arm **102** for adjusting the height of the support arm **102**.

FIG. **5** is an alternative view of the support arm base. As shown, lever mechanism **404** includes a handle **504** coupled with a cross-bars **505** and **506**. Cross-bar **506** is coupled to cross-bar **505** on one end and to a plate **508** having a pin **509** on the other end, and with a pivoting coupling **502** at a point near the plate. Rotating the handle **504** applies a downward force to crossbar **506** causing it to rotate about the coupling **502** to raise the plate **508** to disengage the pin **509**. While disengaged, the base **401** is free to rotate about its vertical axis. Springs may be provided for biasing the pin **509** toward the holes **407** for engaging therewith, or the pin **509** can be engaged by gravity.

FIG. **6** is a side view of a seed carrier **100** according to an embodiment of the present invention. As shown in FIG. **6**, the conveyor **104** includes an elongated discharge spout **602** and is positioned in a transport position. Support members **604** may be mounted on or integral with the legs **106** for holding the conveyor **104** in a forward transport position as shown, or a rearward transport position. As shown, the carrier **100** is fixed to a dual axle trailer **606**.

FIG. **7** illustrates a basic belt driven conveyor according to an embodiment of the present invention. The conveyor **104** comprises a belt **702** that winds about a pair of rollers **704**. The rollers are positioned outside a tube section **706**, a first roller being positioned in the discharge **112** and a second roller being positioned below the conveyor hopper **108**. A motor (not shown) or other means for turning the rollers may be provided at either end of the conveyor. A void **707** exists below the rollers **704** to allow the belt **702** to travel on its return path.

FIG. **8** is a view of a conveyor belt according to an embodiment of the present invention. The discharge end of a conveyor is shown where a conveyor belt wraps around a motor driven roller **802**. The motor may be a hydraulic motor and therefore, hydraulic hoses **804** provide hydraulic fluid flow to and from the motor. Teeth **806** are provided to push grain or seed up the conveyor. As shown, the conveyor belt is cupped in the tube section but flattens out as it reaches the roller **802**. Channeling members (seals) **808** are provided on each side of the belt to form a seal and prevent grain or seed from falling off the edges of the belt as the belt begins to conform to the tubular portion of the conveyor **104**.

FIG. **9** is a front view of the belt as it travels over the roller **802**. Channeling members (seals) **902** are provided on each side of the belt to form a seal and prevent grain or seed from falling off the edges of the belt as the belt flattens at the roller. As shown, the channeling members **902** are fixed to the conveyor discharge **112** with bolts, but can be fixed by other means or can be integral with the discharge.

Discs **904** are provided at the rollers at the edge of the belt to provide additional channeling/sealing means. The discs **904** are preferably integral with the rollers or coupled therewith so that they may rotate.

FIG. **10** is a side view of the hopper end of the conveyor **104**. As shown, conveyor hopper **108** sits above in ingress to the conveyor **104**. When coupled to the support arm **102**, as shown, the conveyor hopper **108** is positioned below a discharge of the main hopper **106**. The discharge **110** may be opened by conventional means. As showed, a wheel handle mechanism **1004** is provided for opening the discharge doors **1006**.

The conveyor hopper **108** is preferably manufactured from light weight materials such as plastic, canvas, rubber or vinyl. As shown, the hopper **108** may include a mechanism for opening and closing the hopper. In this embodiment, flexible coupling or hinge is provided at one end **1008** of the hopper **108** and a mechanism **1010** is provided at the end of the hopper **108** and is coupled with the conveyor **104**, such that the hopper **108** may be made to have an appropriate fit with the discharge **110** of the main hopper **105**. A flap **1012** can be provided at the bottom of the discharge **110**.

FIG. **11** is a schematic view of the hopper end of the conveyor. As is shown, a brush seal **1101** can be located across the belt **702**. The brush seal **1101** retains the conveyed material within the hopper and does not allow the material to enter the void **707** (shown in FIG. **7**) under the roller. Such an arrangement is desirable because it prevents the conveyed material from being subjected to mechanical agitation, which would result in damage to the conveyed material. The brush seal **1101** allows the conveyor teeth **806** to pass, but not the conveyed material.

One will understand that hydraulic power can be provided by a towing vehicle, such as a tractor or the like or alternatively, hydraulic power can be provided on the tender and driving electrically from the towing vehicle, such as a truck.

Thus, a number of preferred embodiments have been fully described above with reference to the drawing figures. Although the invention has been described based upon these preferred embodiments, it would be apparent to those of skill in the art that certain modifications, variations, and alternative constructions could be made to the described embodiments within the spirit and scope of the invention.

We claim:

**1**. A seed or grain tender comprising:

a frame;

a main hopper mounted on said frame and having a main hopper discharge;

a base mounted below said main hopper discharge;

a support arm having first and second ends;

a first coupling connecting said first end of said support arm with said base, said first coupling being rotatable in relation to said base about a first vertical axis of rotation, and said first end of said support arm being rotatable in relation to said first coupling about a first horizontal axis of rotation;

a conveyor having a longitudinal axis and first and second ends, a conveyor hopper at said first end, a conveyor discharge at said second end, and an internal elevator for moving seed or grain from said conveyor hopper to said conveyor discharge; and

a second coupling connecting said second end of said support arm with said conveyor at an approximate center of gravity of said conveyor, said second coupling defining a second vertical axis of rotation that is not parallel to said conveyor longitudinal axis, and said conveyor being rotatable in relation to said second end of said support arm about said second vertical axis of rotation between an unloading position wherein said conveyor hopper is disposed below said main hopper discharge to receive agricultural product from said main hopper and a loading position wherein said conveyor discharge is disposed above said main hopper to dispense agricultural product into said main hopper.

**2**. The seed or grain tender of claim **1**, wherein said first vertical axis of rotation extends through said main hopper discharge.

**3**. The seed or grain tender of claim **1**, wherein said second vertical axis of rotation extends through said approximate center of gravity of said conveyor.

**4**. The seed or grain tender of claim **1**, wherein said first horizontal axis extends through said first end of said support arm.

**5**. The seed or grain tender of claim **1**, wherein said second end of said support arm terminates at or near said second coupling.

**6**. The seed or grain tender of claim **1**, further comprising a hydraulic piston extending at an acute angle relative to a horizontal plane to connect with a portion of said support arm spaced from said first horizontal axis of rotation.

**7**. The seed or grain tender of claim **1**, further comprising a stand coupled with said first end of said conveyor and movable between a stowed position allowing said conveyor hopper to be positioned below said main hopper discharge when said conveyor is in said unloading position and an extended position supporting said conveyor hopper above the ground when said conveyor is in said loading position.

**8**. A seed or grain tender comprising:

a frame;



a main hopper mounted on said frame and having a main hopper discharge;

a base positioned below said main hopper;

a support arm having first and second ends;

a first coupling connecting said first end of said support arm with said base, said first coupling being rotatable about a first vertical axis of rotation, and said first end of said support arm being rotatable about a first horizontal axis of rotation;

a conveyor having a longitudinal axis and first and second ends, a conveyor hopper at said first end, and a conveyor discharge at said second end; and

a second coupling connecting said second end of said support arm with said conveyor at an approximate center of gravity of said conveyor, said second coupling defining a second vertical axis of rotation that is not parallel to said conveyor longitudinal axis, and said conveyor being rotatable about said second vertical axis of rotation between an unloading position wherein said conveyor hopper is disposed below said main hopper discharge to receive agricultural product from said main hopper and a loading position wherein said conveyor discharge is disposed above said main hopper to dispense agricultural product into said main hopper.

**9**. The seed or grain tender of claim **8**, wherein said first vertical axis of rotation extends through said main hopper discharge.

**10**. The seed or grain tender of claim **8**, wherein said second vertical axis of rotation extends through said approximate center of gravity of said conveyor.

**11**. The seed or grain tender of claim **8**, wherein said first horizontal axis extends through said first end of said support arm.

**12**. The seed or grain tender of claim **8**, wherein said second end of said support arm terminates at or near said second coupling.

**13**. The seed or grain tender of claim **8**, wherein said conveyor includes an internal elevator for moving seed or grain from said conveyor hopper to said conveyor discharge.

**14**. The seed or grain tender of claim **8**, further comprising a hydraulic piston extending at an acute angle relative to a horizontal plane to connect with a portion of said support arm spaced from said first horizontal axis of rotation.

**15**. The seed or grain tender of claim **8**, further comprising a stand coupled with said first end of said conveyor and movable between a stowed position allowing said conveyor hopper to be positioned below said main hopper discharge when said conveyor is in said unloading position and an extended position supporting said conveyor hopper above the ground when said conveyor is in said loading position.

**16**. A seed or grain tender comprising:

a main hopper having a main hopper discharge;

a base positioned below said main hopper;

a support arm having first and second ends;

a first coupling connecting said first end of said support arm with said base, said first coupling being rotatable about a first vertical axis of rotation, and said first end of said support arm being rotatable about a first horizontal axis of rotation;

a conveyor having a longitudinal axis and first and second ends, a conveyor hopper at said first end, and a conveyor discharge at said second end; and

a second coupling connecting said second end of said support arm with said conveyor at an approximate center of gravity of said conveyor, said second coupling defining a first conveyor axis of rotation that is not parallel to said conveyor longitudinal axis, and said conveyor being

rotatable about said first conveyor axis of rotation between an unloading position wherein said conveyor hopper is disposed below said main hopper discharge to receive agricultural product from said main hopper and a loading position wherein said conveyor discharge is disposed above said main hopper to dispense agricultural product into said main hopper.

**17**. The seed or grain tender of claim **16**, wherein said first vertical axis of rotation extends through said main hopper discharge.

**18**. The seed or grain tender of claim **16**, wherein said first conveyor axis of rotation extends through said approximate center of gravity of said conveyor.

**19**. The seed or grain tender of claim **16**, wherein said first horizontal axis extends through said first end of said support arm.



**20**. The seed or grain tender of claim **16**, wherein said second end of said support arm terminates at or near said second coupling.

**21**. The seed or grain tender of claim **16**, wherein said conveyor includes an internal elevator for moving seed or grain from said conveyor hopper to said conveyor discharge.

**22**. The seed or grain tender of claim **16**, further comprising a hydraulic piston extending at an acute angle relative to a horizontal plane to connect with a portion of said support arm spaced from said first horizontal axis of rotation.

**23**. The seed or grain tender of claim **16**, further comprising a stand coupled with said first end of said conveyor and movable between a stowed position allowing said conveyor hopper to be positioned below said main hopper discharge when said conveyor is in said unloading position and an extended position supporting said conveyor hopper above the ground when said conveyor is in said loading position.

* * * * *

# EXHIBIT C

US009745123B2

(12) **United States Patent**
**Petersen et al.**

(10) **Patent No.: US 9,745,123 B2**
(45) **Date of Patent: Aug. 29, 2017**

(54) **SEED CARRIER WITH PIVOTING CONVEYOR**

(71) Applicant: **UNVERFERTH MANUFACTURING COMPANY, INC.**, Kalida, OH (US)

(72) Inventors: **Brian James Petersen**, Ottawa, OH (US); **David Richard Smith**, Fort Jennings, OH (US)

(73) Assignee: **UNVERFERTH MANUFACTURING COMPANY, INC.**, Kalida, OH (US)

( * ) Notice: Subject to any disclaimer, the term of this patent is extended or adjusted under 35 U.S.C. 154(b) by 305 days.

(21) Appl. No.: **14/606,794**

(22) Filed: **Jan. 27, 2015**

(65) **Prior Publication Data**

US 2015/0197395 A1 Jul. 16, 2015

**Related U.S. Application Data**

(63) Continuation of application No. 13/541,553, filed on Jul. 3, 2012, now Pat. No. 8,967,940, which is a

(Continued)

(51) **Int. Cl.**
***B65F 1/00*** (2006.01)
***B65D 88/54*** (2006.01)

(Continued)

(52) **U.S. Cl.**
CPC ..... ***B65D 88/54*** (2013.01); ***A01C 15/003*** (2013.01); ***A01C 15/006*** (2013.01); ***B60P 1/36*** (2013.01);

(Continued)

(58) **Field of Classification Search**
CPC ..... B60P 1/00; B60P 1/36; B60P 1/42

(Continued)

(56) **References Cited**

U.S. PATENT DOCUMENTS

427,736 A 5/1890 Bufkin ..... 198/317
1,905,434 A 4/1933 Boyer ..... 414/328

(Continued)

FOREIGN PATENT DOCUMENTS

CA 2416677 A1 8/2004
FR 2465667 A1 3/1981

OTHER PUBLICATIONS

Model 2300 Air System and the Model 4800 Air Drill, both made and sold by Concord, as illustrated in the Concord brochure, 12 pages.

(Continued)

*Primary Examiner* — Saul Rodriguez
*Assistant Examiner* — Willie Berry, Jr.
(74) *Attorney, Agent, or Firm* — Rothwell, Figg, Ernst & Manbeck, P.C.

(57) **ABSTRACT**

A seed carrier includes a main hopper coupled with a frame via leg members. The main hopper has a discharge. A base plate is coupled with the frame. A support arm is rotatably coupled with the base plate at a first end. A belt driven conveyor having a conveyor hopper at a first end and a discharge at a second end is rotatably coupled with a second end of the support arm at an approximate center of gravity thereof. A latch mechanism is provided for detachably coupling the first end of the conveyor with the first end of the support arm such that the conveyor hopper is position below the main hopper discharge. When the conveyor is uncoupled from the first end of the support arm, the conveyor can rotate to a loading position wherein the discharge thereof can be positioned over the main hopper.

**21 Claims, 11 Drawing Sheets**

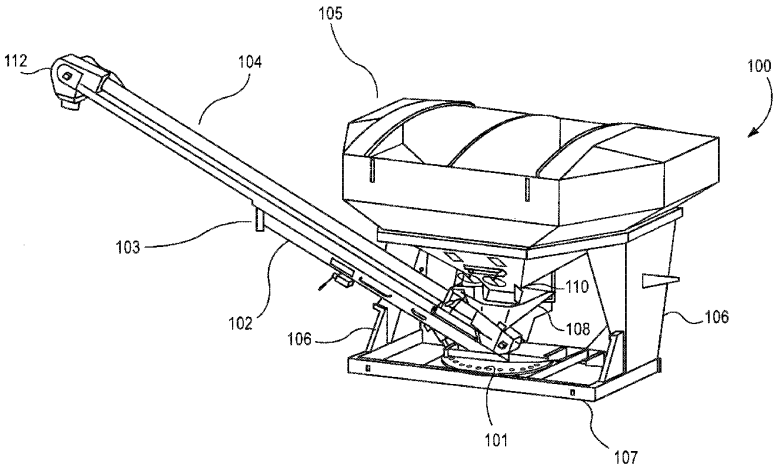

**Related U.S. Application Data**

continuation of application No. 12/031,867, filed on Feb. 15, 2008, now Pat. No. 8,221,047.

(60) Provisional application No. 60/901,321, filed on Feb. 15, 2007.

(51) **Int. Cl.**

| | |
|---|---|
| ***A01C 15/00*** | (2006.01) |
| ***B60P 1/36*** | (2006.01) |
| ***B65G 65/32*** | (2006.01) |
| ***B65G 65/40*** | (2006.01) |
| ***B65G 65/42*** | (2006.01) |
| *B60P 1/00* | (2006.01) |

(52) **U.S. Cl.**
CPC ..... ***B65G 65/32*** (2013.01); ***B65G 65/40*** (2013.01); ***B65G 65/42*** (2013.01); *B60P 1/00* (2013.01)

(58) **Field of Classification Search**
USPC ..... 414/523; 111/11; 198/312, 315, 316, 198/317, 318
See application file for complete search history.

(56) **References Cited**

U.S. PATENT DOCUMENTS


| | | | | |
|---|---|---|---|---|
| 3,090,515 | A | 5/1963 | Crowther | |
| 3,493,136 | A | 2/1970 | Spellman, Jr. | |
| 3,498,483 | A | 3/1970 | Meharry | 414/523 |
| 3,968,771 | A | 7/1976 | Walgenbach et al. | 118/303 |
| 3,994,512 | A | 11/1976 | Parker et al. | 280/687 |
| 3,997,215 | A | 12/1976 | Parker et al. | 298/24 |
| 4,037,745 | A | 7/1977 | Hengen et al. | |
| 4,218,169 | A | 8/1980 | Arends | |
| 4,274,790 | A | 6/1981 | Barker | |
| 4,312,621 | A | 1/1982 | Quanbeck et al. | |
| 4,411,581 | A | 10/1983 | Niewold | |
| 4,419,037 | A | 12/1983 | Niewold | |
| 4,491,216 | A | 1/1985 | Sawby | |
| 4,503,803 | A | 3/1985 | Barnes | 118/303 |
| 4,613,275 | A | 9/1986 | Karlowsky | |
| 4,742,938 | A | 5/1988 | Niewold | |
| 5,013,208 | A | 5/1991 | Grieshop | |
| 5,468,113 | A | 11/1995 | Davis | |
| 5,484,249 | A | 1/1996 | Klatt | 414/523 |
| 5,516,253 | A | 5/1996 | Linscheid et al. | |
| 5,520,495 | A | 5/1996 | Sukup | 414/523 |
| 5,529,455 | A | 6/1996 | Kaster et al. | |
| 5,538,388 | A | 7/1996 | Bergkamp et al. | |
| 5,582,221 | A | 12/1996 | Smith et al. | |
| 5,615,990 | A | 4/1997 | Grieshop | 414/526 |
| 5,718,556 | A | 2/1998 | Forsyth | 414/503 |
| 5,785,481 | A | 7/1998 | Ockels | |
| 5,800,116 | A | 9/1998 | Smith et al. | 414/523 |
| 5,888,044 | A * | 3/1999 | Baskerville | B60P 1/42 198/311 |
| 5,980,189 | A | 11/1999 | Rubner | |
| 6,113,339 | A | 9/2000 | Adams | |
| 6,120,233 | A | 9/2000 | Adam | 414/502 |
| 6,209,880 | B1 | 4/2001 | Turnwald et al. | 277/402 |
| 6,325,588 | B1 | 12/2001 | Nolin | 414/526 |
| 6,604,620 | B2 | 8/2003 | Dennis | 198/312 |
| 6,767,174 | B2 | 7/2004 | Cresswell | 414/523 |
| 6,908,380 | B2 | 6/2005 | Silver | |
| 7,223,059 | B2 | 5/2007 | Smith et al. | |
| 7,267,519 | B2 | 9/2007 | Cresswell et al. | |
| 7,393,275 | B2 | 7/2008 | Voss et al. | |
| 7,428,956 | B2 | 9/2008 | Scherman | 198/312 |
| 7,488,149 | B2 | 2/2009 | Waldner | 414/532 |
| 7,500,814 | B2 | 3/2009 | Meyer | |
| 7,500,817 | B2 * | 3/2009 | Furrer | A01C 15/003 198/311 |
| 7,553,228 | B2 | 6/2009 | Dillon | |
| 8,221,047 | B2 | 7/2012 | Petersen et al. | 414/523 |
| 2003/0057055 | A1 | 3/2003 | Haukaas et al. | 198/313 |
| 2006/0180062 | A1 | 8/2006 | Furrer et al. | |
| 2009/0110524 | A1 | 4/2009 | Hoffmann | 414/507 |


OTHER PUBLICATIONS


Convey-All, BTS 290 Seed Tender Product Specification, 2 pages.
Convey-All Ind. Inc., Engineering Drawings of BT-1500, 4 pages.
Par-Kan Company, Engineering Drawings, 2 pages.
Great Plains Manufacturing, Inc., Parts Manual—Model ADC2220 Air Drill Cart, May 1, 1997, 61 pages.
Great Plains Manufacturing, Inc., Parts Manual—Model ADC2220 Air Drill Cart, Mar. 1, 2000, 69 pages.
Reexamination File History for Control No. 95000691, 374 pages.
Order Denying Request for Inter Partes Reexamination for Control No. 95000691, Nov. 7, 2012, 15 pages.
Par-Kan Company, Final Invalidity Contentions submitted in *Unverferth Mfg. Co., Inc.* v. *Par-Kan Co.,* Civil Action No. 13-cv-00097 (N.D. Ind.), Oct. 25, 2013, 130 pages.
Par-Kan Company, Preliminary Invalidity Contentions submitted in *Unverferth Mfg. Co., Inc.* v. *Par-Kan Co.,* Civil Action No. 13-cv-00097 (N.D. Ind.), Jun. 17, 2013, 169 pages.
Declaration of Shawn Gerdeman with Exhibits A-E dated Sep. 18, 2014, 24 pages.
Hiniker Company, Model 4836 Air Seeder Cart with 4800 Air Drill Front Folding Toolbar, Operator's Manual, Jan. 1999, 58 pages.
Hiniker Company, Models 4831, 4832, and 4833 Air Seeder Cart with 4800 Air Seeder Front Folding Toolbar, Assembly Manual, Jan. 2000, 49 pages.
Hiniker 4831, 4832, 4833 Air Seeder, Jul. 21, 1999, 1 page.
Hiniker Company, Fill Auger Support Assembly, 1 page.
Hiniker Company, 4800 Soybean Planter Marketing Material, 6 pages.
Hiniker Company, Product Photographs, 67 pages.
J&M Manufacturing Company, Inc., Annotated Photographs of Hiniker Company 4836 Air Seed Cart, 8 pages.
Great Plains Manufacturing, 220 Bushel Air Cart, 2 pages.
J&M Manufacturing Company, Inc., J&M Mfg. Co., Inc.'s Amended Initial Invalidity Contentions submitted in *Unverferth Mfg. Co., Inc.* v. *J&M Mfg. Co., Inc.,* Civil Action No. 3:16-cv-02282-JZ (N.D. Ohio), Feb. 7, 2017, 59 pages.


* cited by examiner

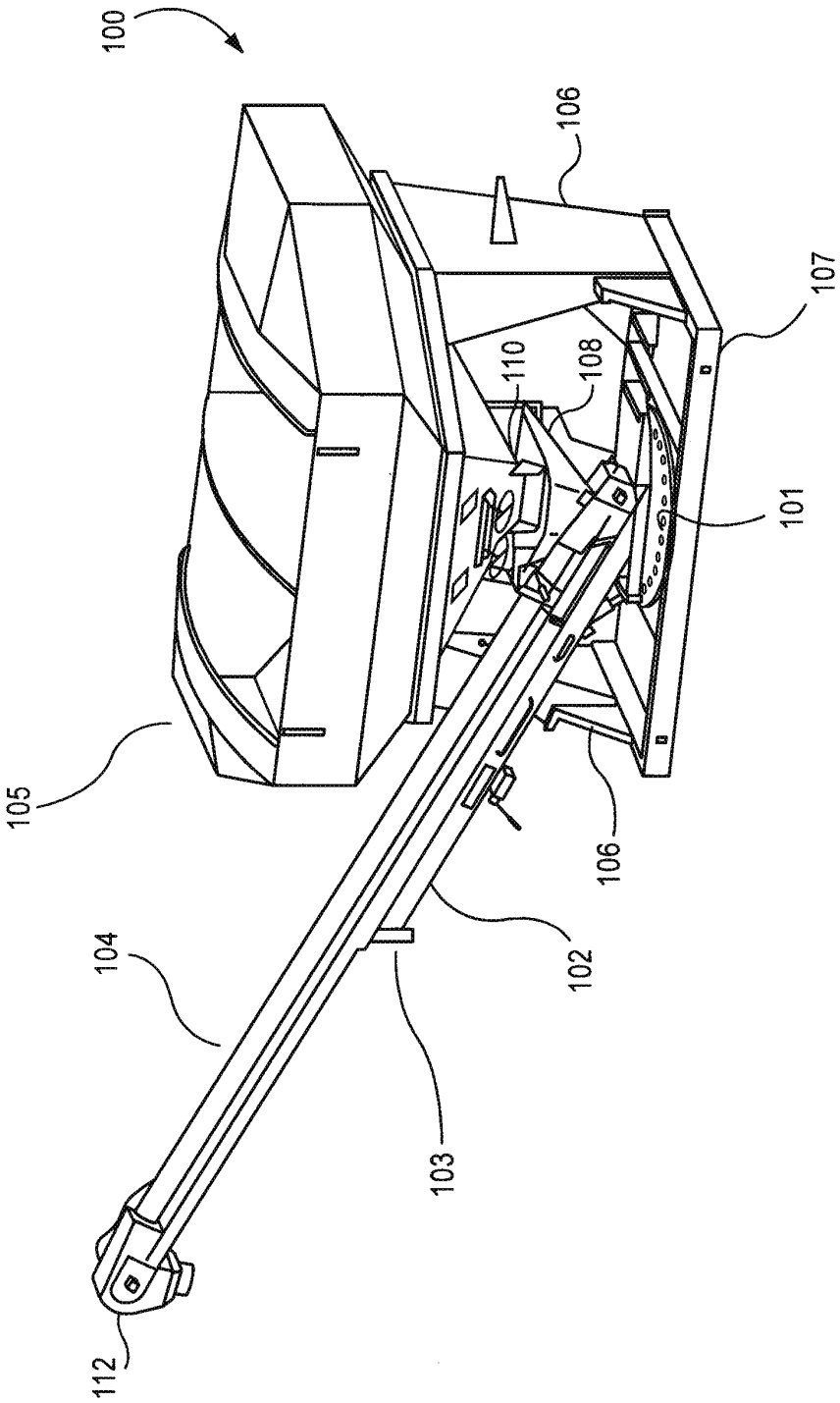


FIG.1

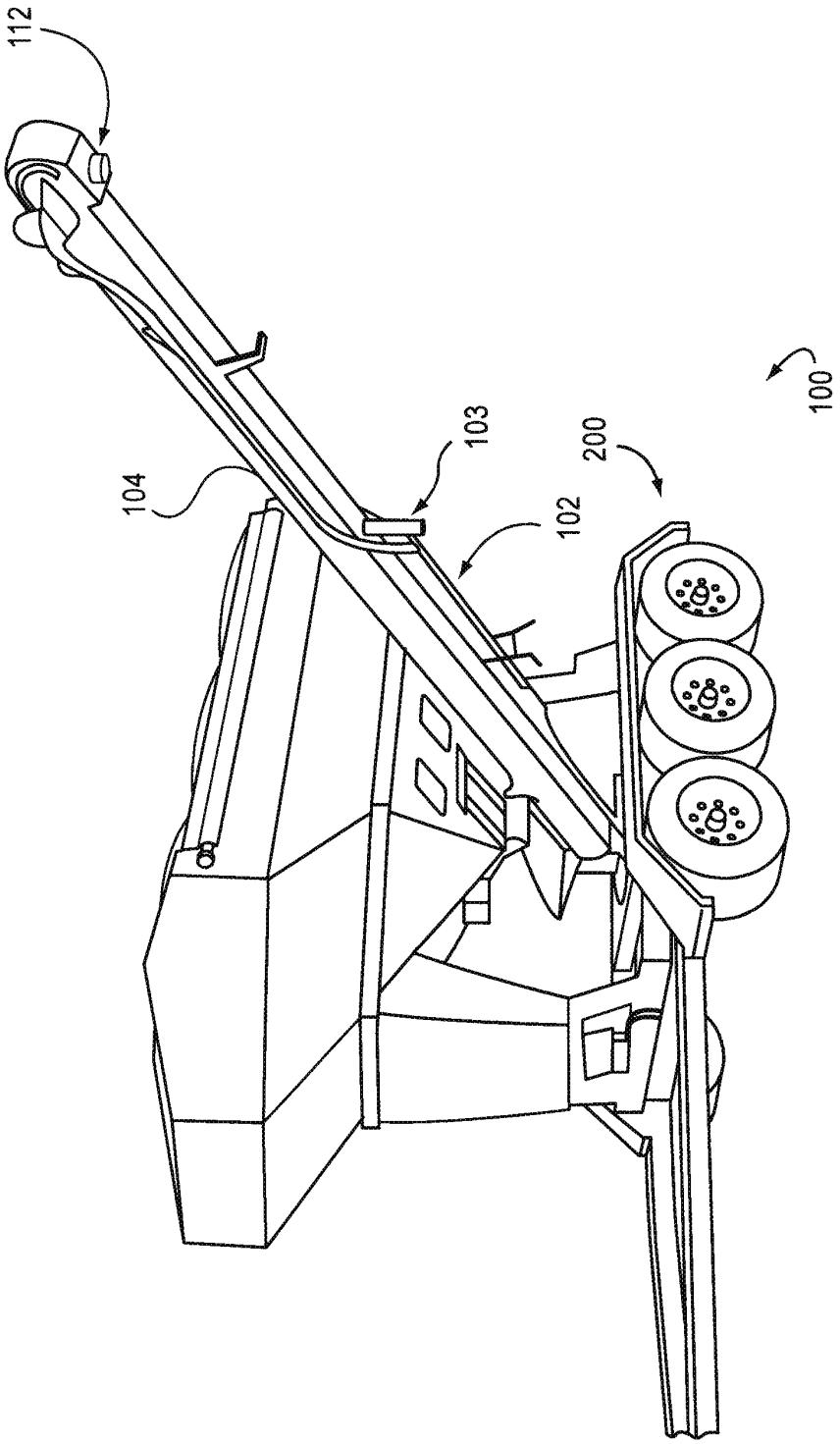


FIG.2

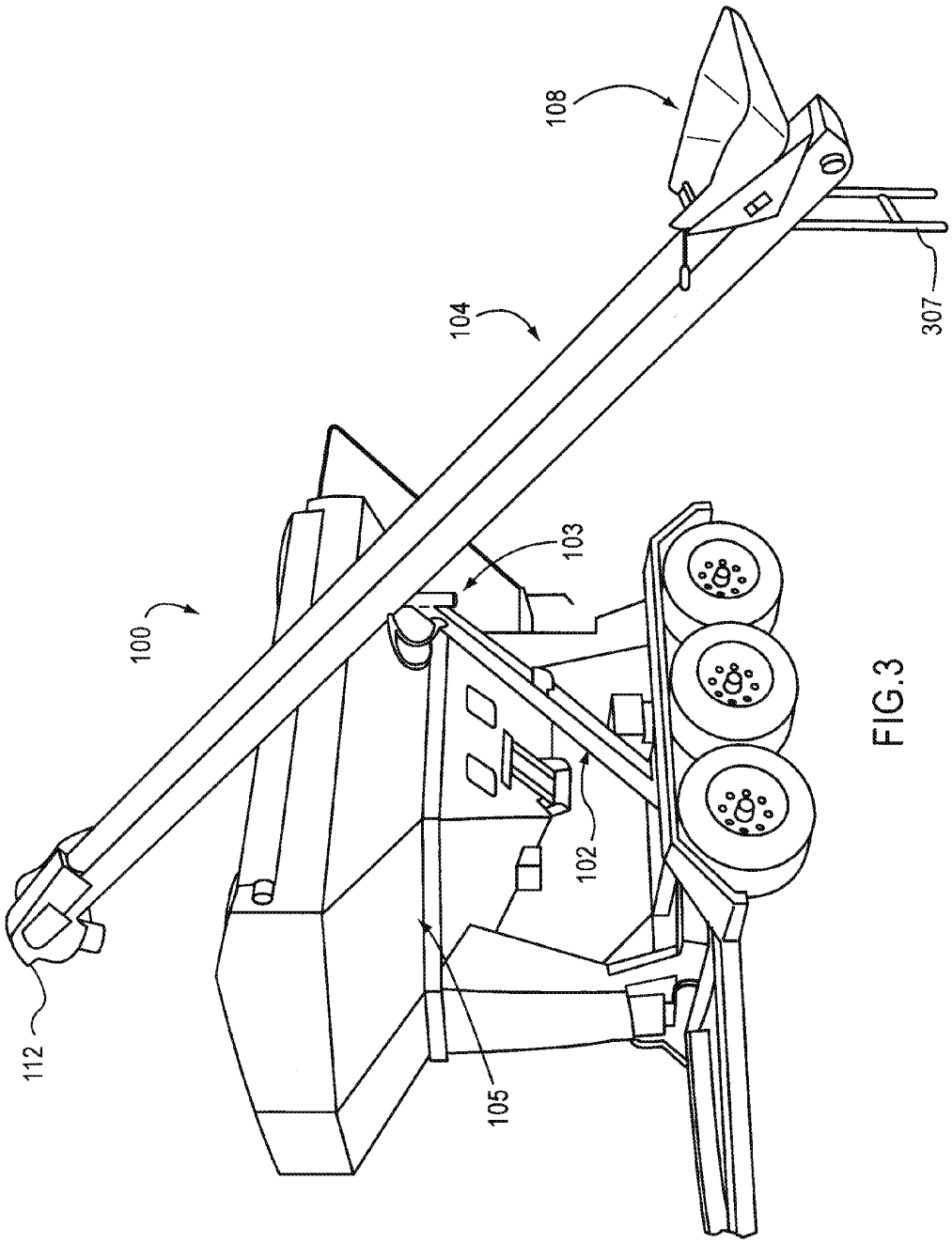


FIG.3

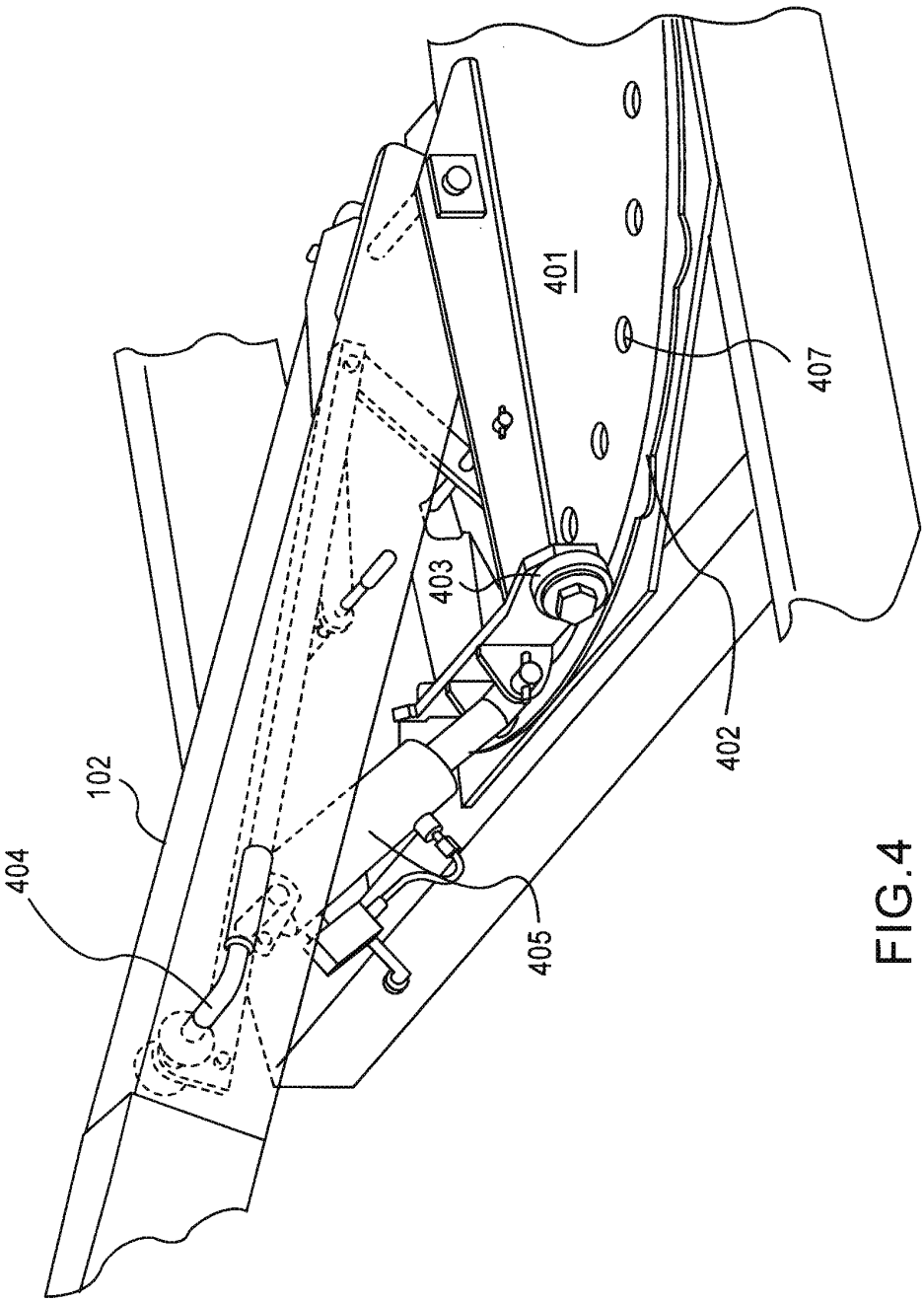


FIG.4

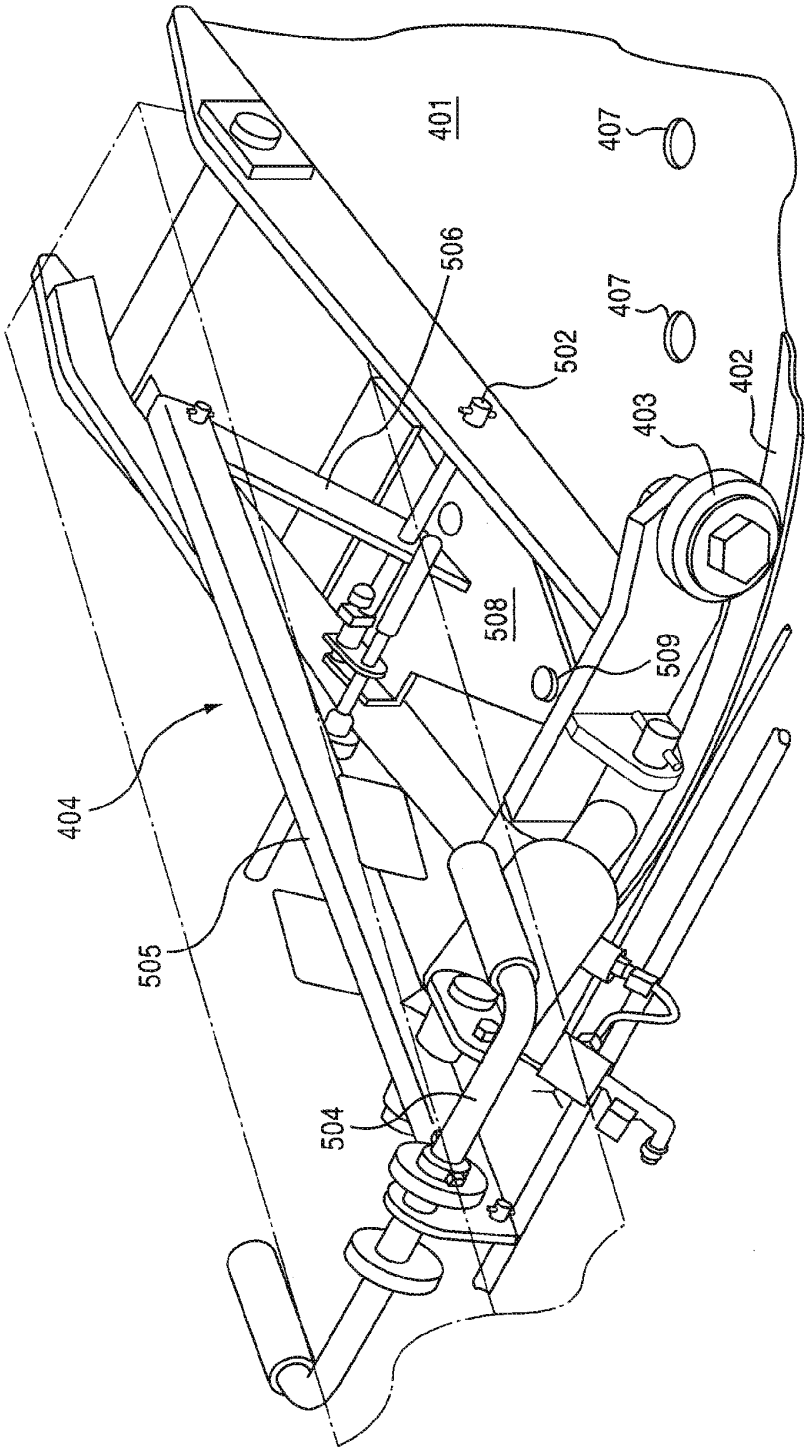


FIG.5

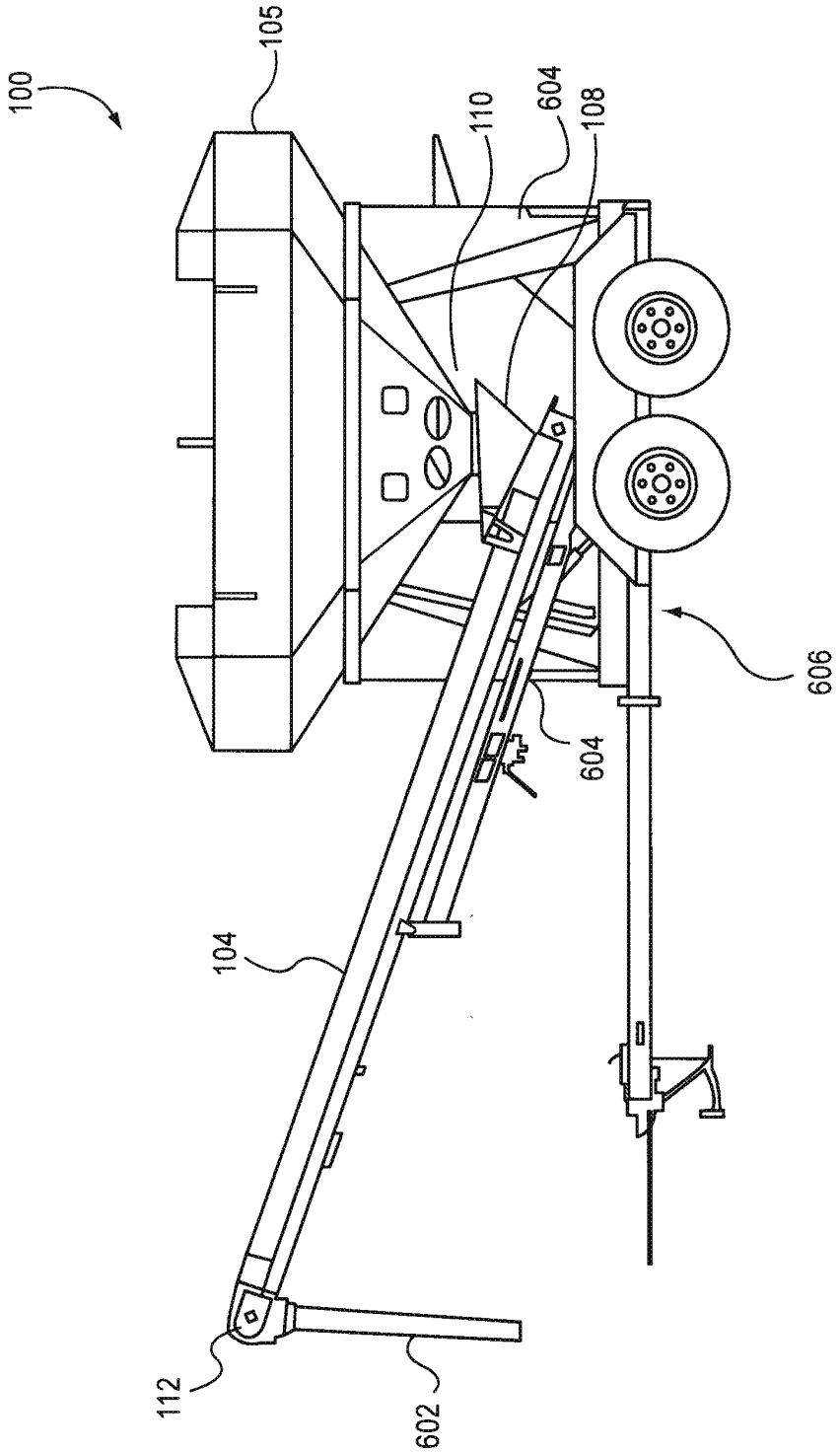


FIG.6

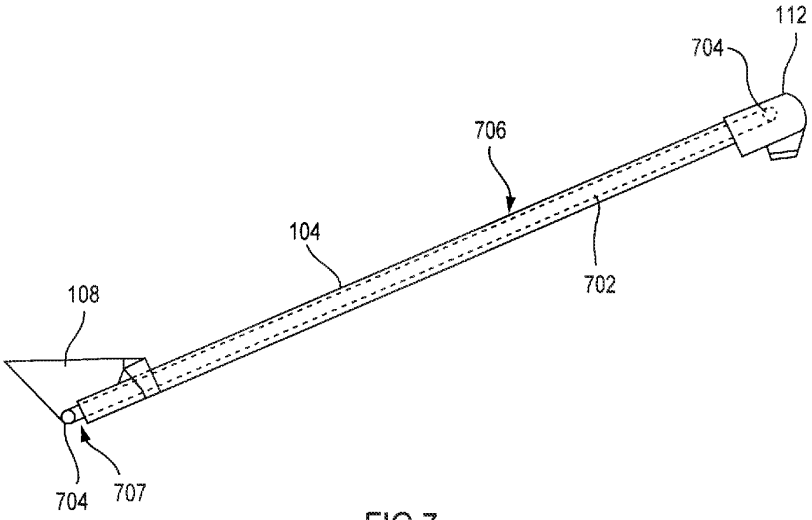


FIG.7

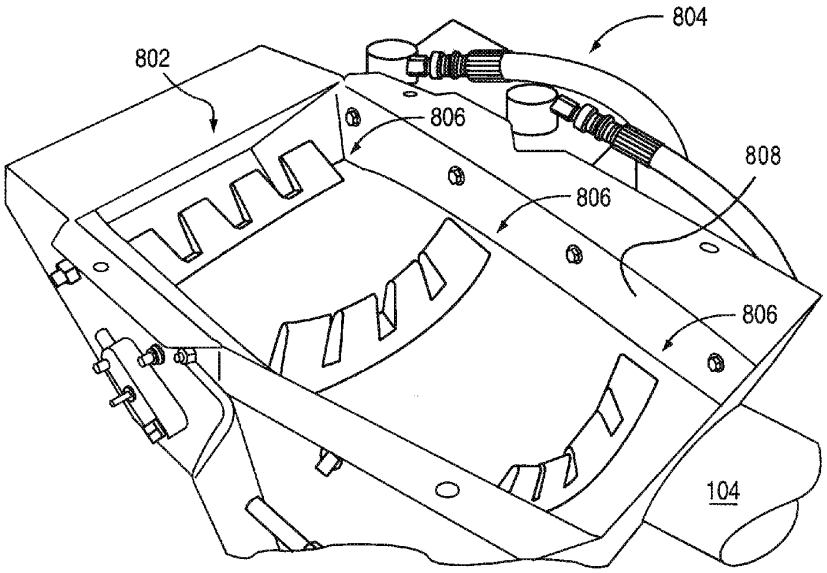


FIG.8

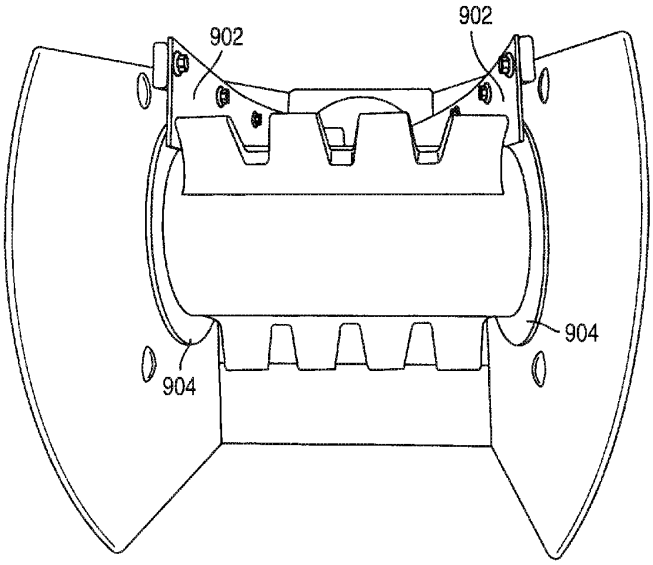


FIG.9

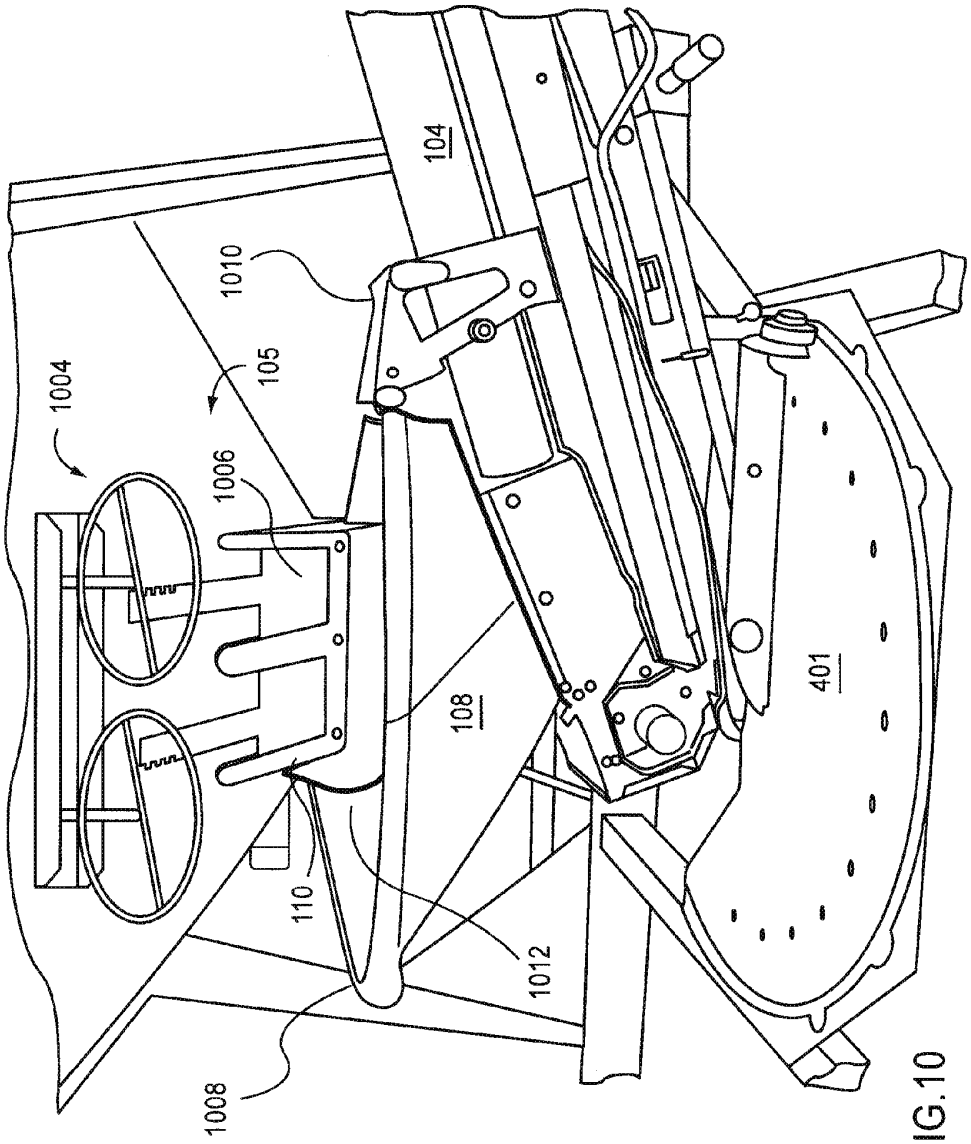


FIG.10

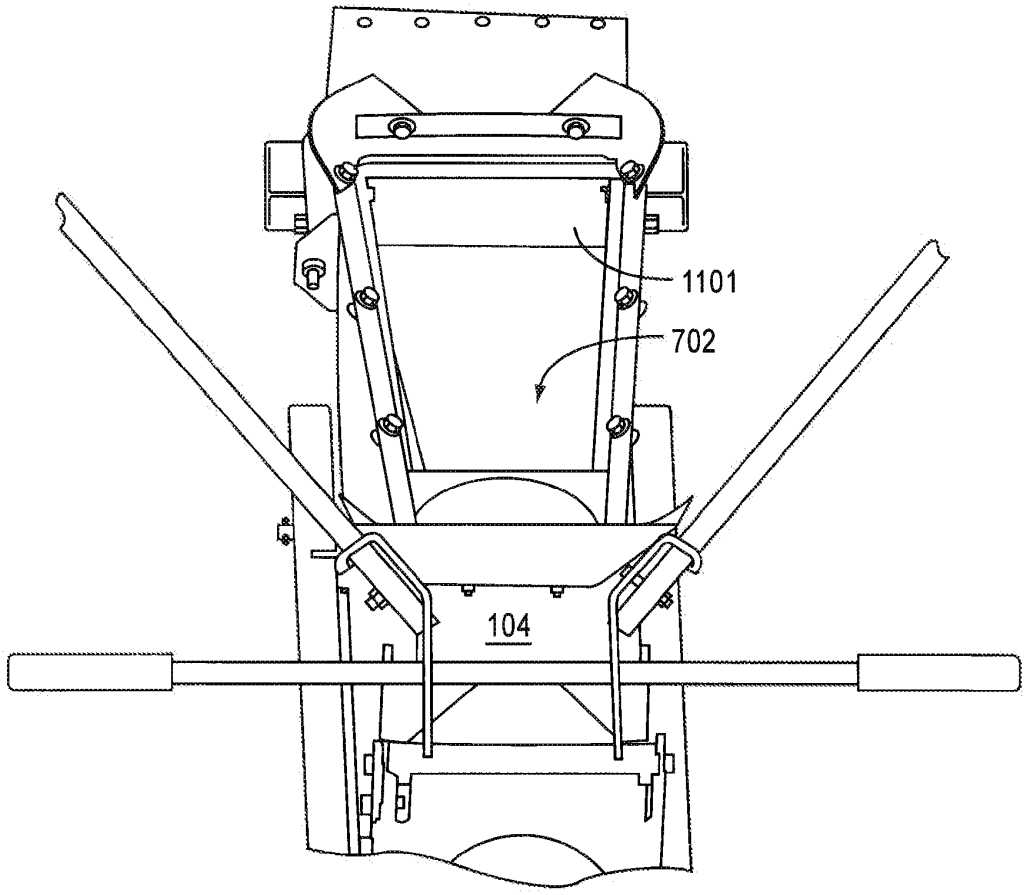


FIG.11

# SEED CARRIER WITH PIVOTING CONVEYOR

## CROSS-REFERENCE TO RELATED APPLICATIONS

The present application is a Continuation of U.S. application Ser. No. 13/541,553, filed Jul. 3, 2012, which claims priority to U.S. application Ser. No. 12/031,867, filed Feb. 15, 2008, now U.S. Pat. No. 8,221,047, which claims priority to Provisional Patent Application Ser. No. 60/901,321 filed on Feb. 15, 2007, the entire disclosures of which are incorporated herein by reference.

## BACKGROUND OF THE INVENTION

Field of the Invention

The present invention relates generally to a conveyor system for a grain or seed carrier. The conveyor system includes a novel pivot system that allows it to either load or unload a container by pivoting it into a loading or unloading position.

Description of the Related Art

Conveyor systems for moving grain, seed, etc. are well known. Auger systems are used to rapidly move grain such as feed or the like, while belt driven conveyors are often used for moving more expensive payload, such as seed.

One belt driven conveyor system includes a generally flat belt constructed from a flexible, sturdy material such as rubber or nylon. The conveyor is housed in a tube with rollers on both ends so that the belt may rotate in order to transmit material from one end to the other. Such conveyors are used for unloading seed carriers or the like. However, current conveyors have several problems.

First, current conveyors have the problem that the material being moved can be damaged by the rollers. Second, current conveyors do not have a full range of motion as implemented in seed carries. Third, current conveyors are only implemented for unloading.

There is a need for new and improved conveyor systems that allow a wagon to be unloaded and loaded using a single mechanism.

## SUMMARY OF THE INVENTION

According to an embodiment of the present invention, a seed tender or carrier is provided that includes a main hopper for holding seed and a conveyor for transferring seed to and from the main hopper.

According to an embodiment of the present invention, in an unloading position, one end of the conveyor may be positioned under the discharge of the main hopper and coupled with a pivoting support arm. In the unload position, the conveyor can be used to transfer seed from the main hopper to another location, such as to a planter, seeding unit, or the like. A pivot mechanism allows the conveyor to be rotated from under the box into a loading position in which the conveyor intake can rest on the ground or on a stand while the conveyor discharge is positioned to allow conveyed material to be discharged into the main hopper. In this loading position, the conveyor can be used to fill the main hopper.

According to an embodiment of the present invention, a conveyor hopper is provided on the intake side of the conveyor.

According to an embodiment of the present invention, the pivot mechanism allows the conveyor to swing from side to side to simplify unloading of the main hopper and the filling of planters, etc. The pivot mechanism can include a hydraulic cylinder that adjusts the vertical height of the conveyor discharge relative for different filling applications.



According to an embodiment of the present invention, a pivot single pivot point can be provided at one end of the support arm to allow the conveyor to be rotated between the loading and unloading position. The conveyor may be balanced on the pivot point at a location near or at the center of gravity, thereby permitting the conveyor to be rotated with minimal effort on the part of the operator.

According to an embodiment of the present invention, the conveyor can be rotated through at least 180 degrees about a vertical axis and so that it may be positioned in either a forward or rearward transport position. This feature enables the tender to be pulled by different vehicles such as by a pick-up truck with the conveyor forward or by a grain truck with the conveyor rearward.

Further applications and advantages of various aspects and embodiments of the present invention are discussed below with reference to the drawing figures.

## BRIEF DESCRIPTION OF THE DRAWINGS

FIG. **1** illustrates a seed carrier according to an embodiment of the present invention.

FIG. **2** is a view of a seed carrier in an unloading position according to an embodiment of the present invention.

FIG. **3** is a view of a seed carrier in a loading position according to an embodiment of the present invention.

FIG. **4** is a view of a base system for the seed carrier according to an embodiment of the present invention.

FIG. **5** is a view of a lever mechanism for the base system according to an embodiment of the present invention.

FIG. **6** is a view of a seed carrier in a transport position according to an embodiment of the present invention.

FIG. **7** is a view of a belt conveyor for the seed carrier according to an embodiment of the present invention.

FIG. **8** is a view of the discharge end of a conveyor according to an embodiment of the present invention.

FIG. **9** is a forward view of a conveyor belt wrapping around a roller according to an embodiment of the present invention.

FIG. **10** is a view of the conveyor hopper in an unloading position according to an embodiment of the present invention.

FIG. **11** illustrates the receiving end of the conveyor according to one embodiment of the present invention.

## DETAILED DESCRIPTION OF THE PREFERRED EMBODIMENTS

While the present invention may be embodied in many different forms, a number of illustrative embodiments are described herein with the understanding that the present disclosure is to be considered as providing examples of the principles of the invention and such examples are not intended to limit the invention to preferred embodiments described herein and/or illustrated herein.

In embodiments of the present invention, the novel conveyor pivot system can be implemented with seed carrier or seeding machines. The following section describes non-limiting examples of illustrative seeding equipment according to embodiments of the present invention. It should be appreciated that the following examples are provided for illustration and the present invention is not intended to be limited to the embodiments described herein.

FIG. **1** is a diagram depicting a seed carrier having a tube conveyor according to an embodiment of the present invention. The seed carrier **100** includes a main hopper **105** coupled to a frame **107** by legs **106**. A conveyor **104** is supported by a support arm **102** coupled with a pivoting mechanism **101** fixed to the frame **107**. The conveyor **104** is pivotably coupled with the support arm by a coupling **103** at a point that is preferably near or at the center of gravity of the conveyor **104**. The conveyor **104** is also coupled to the support arm **102** by a latch (not shown) at the bottom of the conveyor. The latch allows the conveyor **104** to be uncoupled from the support arm **102** at the bottom so that the conveyor is free to rotate about the coupling **103**. By positioning the coupling **103** at or near the center of gravity of the conveyor **104**, the conveyor **104** balances on the pivoting coupling **103** such that little effort is required to rotate the conveyor **104**.

The conveyor **104** includes a conveyor hopper **108** at its base, which is shown in the unloading position below the gravity discharge **110** of the main hopper **105**. At the other end of the conveyor **104** is the discharge **112**. Seed can be gravity feed from the main hopper **105** into the conveyor hopper **108**, which can then be moved to the discharge **112** of the conveyor **104** by an internal elevator (not shown). In one embodiment, the elevator is a motor-driven belt type elevator coupled onto rollers at both ends of the conveyor.

The seed carrier **100** may be transported by conventional means such as on a trailer. FIG. **2** illustrates the seed carrier **100** on a three axle trailer **200** according to an embodiment of the present invention. As shown, the conveyor **104** is in the unloading position.

FIG. **3** illustrates the seed carrier **100** in the loading position. As shown, the conveyor **104** is uncoupled from the support arm **102** at its base and rotated 180 degrees about pivot coupling **103** so that the conveyor hopper **108** is positioned at a convenient location away from the carrier while the discharge **112** of the conveyor **104** is located over the main hopper **105**. A stand **307** is provided for holding the conveyor hopper **108** in place. The stand **307** may be integrated with the conveyor **104**.

Accordingly, in the loading position, grain, seed or like can be feed into the conveyor hopper **108** to be moved to the discharge **112** for filling the main hopper **105**.

FIG. **4** is a view of the pivoting base of the support arm **102**. As shown, the support arm **102** can be pivotably coupled to a base **401** at a center point so that the support arm **102** is rotatable about a vertical axis. Wheels **403** provide support and can run along a track **402** to facilitate the support arm's **102** motion about the perimeter of the base **401**. The support arm **102** can be locked into a selected position of the base **401** by engaging a pin (not shown) with one of a plurality of the holes **407** distributed around the base **401**. The pin is disengaged with a hole by actuating a lever mechanism **404**, which lifts the pin out of a hole. The lever mechanism **404** may be spring actuated to bias the pin toward the holes, so that simply releasing the lever will allow the pin to engage with one of the holes **407**. Also shown, a hydraulic piston **405** is coupled with the support arm **102** for adjusting the height of the support arm **102**.

FIG. **5** is an alternative view of the support arm base. As shown, lever mechanism **404** includes a handle **504** coupled with a cross-bars **505** and **506**. Cross-bar **506** is coupled to cross-bar **505** on one end and to a plate **508** having a pin **509** on the other end, and with a pivoting coupling **502** at a point near the plate. Rotating the handle **504** applies a downward force to crossbar **506** causing it to rotate about the coupling **502** to raise the plate **508** to disengage the pin **509**. While disengaged, the base **401** is free to rotate about its vertical axis. Springs may be provided for biasing the pin **509** toward the holes **407** for engaging therewith, or the pin **509** can be engaged by gravity.

FIG. **6** is a side view of a seed carrier **100** according to an embodiment of the present invention. As shown in FIG. **6**, the conveyor **104** includes an elongated discharge spout **602** and is positioned in a transport position. Support members **604** may be mounted on or integral with the legs **106** for holding the conveyor **104** in a forward transport position as shown, or a rearward transport position. As shown, the carrier **100** is fixed to a dual axle trailer **606**.

FIG. **7** illustrates a basic belt driven conveyor according to an embodiment of the present invention. The conveyor **104** comprises a belt **702** that winds about a pair of rollers **704**. The rollers are positioned outside a tube section **706**, a first roller being positioned in the discharge **112** and a second roller being positioned below the conveyor hopper **108**. A motor (not shown) or other means for turning the rollers may be provided at either end of the conveyor. A void **707** exists below the rollers **704** to allow the belt **702** to travel on its return path.

FIG. **8** is a view of a conveyor belt according to an embodiment of the present invention. The discharge end of a conveyor is shown where a conveyor belt wraps around a motor driven roller **802**. The motor may be a hydraulic motor and therefore, hydraulic hoses **804** provide hydraulic fluid flow to and from the motor. Teeth **806** are provided to push grain or seed up the conveyor. As shown, the conveyor belt is cupped in the tube section but flattens out as it reaches the roller **802**. Channeling members (seals) **808** are provided on each side of the belt to form a seal and prevent grain or seed from falling off the edges of the belt as the belt begins to conform to the tubular portion of the conveyor **104**.

FIG. **9** is a front view of the belt as it travels over the roller **802**. Channeling members (seals) **902** are provided on each side of the belt to form a seal and prevent grain or seed from falling off the edges of the belt as the belt flattens at the roller. As shown, the channeling members **902** are fixed to the conveyor discharge **112** with bolts, but can be fixed by other means or can be integral with the discharge.

Discs **904** are provided at the rollers at the edge of the belt to provide additional channeling/sealing means. The discs **904** are preferably integral with the rollers or coupled therewith so that they may rotate.

FIG. **10** is a side view of the hopper end of the conveyor **104**. As shown, conveyor hopper **108** sits above in ingress to the conveyor **104**. When coupled to the support arm **102**, as shown, the conveyor hopper **108** is positioned below a discharge of the main hopper **106**. The discharge **110** may be opened by conventional means. As showed, a wheel handle mechanism **1004** is provided for opening the discharge doors **1006**.

The conveyor hopper **108** is preferably manufactured from light weight materials such as plastic, canvas, rubber or vinyl. As shown, the hopper **108** may include a mechanism for opening and closing the hopper. In this embodiment, flexible coupling or hinge is provided at one end **1008** of the hopper **108** and a mechanism **1010** is provided at the end of the hopper **108** and is coupled with the conveyor **104**, such that the hopper **108** may be made to have an appropriate fit with the discharge **110** of the main hopper **105**. A flap **1012** can be provided at the bottom of the discharge **110**.

FIG. **11** is a schematic view of the hopper end of the conveyor. As is shown, a brush seal **1101** can be located across the belt **702**. The brush seal **1101** retains the conveyed material within the hopper and does not allow the material

to enter the void **707** (shown in FIG. **7**) under the roller. Such an arrangement is desirable because it prevents the conveyed material from being subjected to mechanical agitation, which would result in damage to the conveyed material. The brush seal **1101** allows the conveyor teeth **806** to pass, but not the conveyed material.

One will understand that hydraulic power can be provided by a towing vehicle, such as a tractor or the like or alternatively, hydraulic power can be provided on the tender and driving electrically from the towing vehicle, such as a truck.

Thus, a number of preferred embodiments have been fully described above with reference to the drawing figures. Although the invention has been described based upon these preferred embodiments, it would be apparent to those of skill in the art that certain modifications, variations, and alternative constructions could be made to the described embodiments within the spirit and scope of the invention.

We claim:

**1**. A seed or grain tender comprising:

a main hopper having a main hopper discharge;

a support arm having first and second ends;

said first end of said support arm being located below said main hopper and being rotatable about a first axis of rotation, and said first end of said support arm being rotatable about a second axis of rotation that is perpendicular to said first axis of rotation;

a conveyor having a longitudinal axis and first and second ends, a conveyor hopper at said first end, a conveyor discharge at said second end, and an internal elevator for moving seed or grain from said conveyor hopper to said conveyor discharge;

said second end of said support arm being coupled with said conveyor between said first and second ends of said conveyor, said conveyor being rotatable about a third axis of rotation at said second end of said support arm that is not parallel to said conveyor longitudinal axis, and said conveyor being rotatable in relation to said second end of said support arm about said third of axis of rotation between an unloading position wherein said conveyor hopper is disposed below said main hopper discharge to receive agricultural product from said main hopper and a loading position wherein said conveyor discharge is disposed above said main hopper to dispense agricultural product into said main hopper, and

a hydraulic piston extending at an acute angle relative to a horizontal plane to connect with a portion of said support arm spaced from said second axis of rotation.

**2**. The seed or grain tender of claim **1**, wherein said first axis of rotation extends through said main hopper discharge.

**3**. The seed or grain tender of claim **1**, wherein said second axis of rotation extends through said first end of said support arm.

**4**. The seed or grain tender of claim **1**, wherein said third axis of rotation extends through said conveyor.

**5**. The seed or grain tender of claim **1**, wherein said third axis of rotation extends through said second end of said support arm.

**6**. The seed or grain tender of claim **1**, wherein said third axis of rotation extends through said conveyor and said second end of said support arm.

**7**. The seed or grain tender of claim **1**, wherein said third axis of rotation is oriented at an angle having a vertical component.

**8**. The seed or grain tender of claim **1**, wherein said second end of said support arm is coupled with said conveyor at or near said approximate center of gravity of said conveyor.

**9**. The seed or grain tender of claim **1**, further comprising a stand coupled with said first end of said conveyor and movable between a stowed position allowing said conveyor hopper to be positioned below said main hopper discharge when said conveyor is in said unloading position and an extended position supporting said conveyor hopper above the ground when said conveyor is in said loading position.

**10**. A seed or grain tender comprising:

a main hopper having an upper portion with a main hopper intake opening and a lower portion with a main hopper discharge;

a support arm having a first end proximate said lower portion of said main hopper and a second end;

wherein said support arm is pivotable about a first axis of rotation proximate said first end of said support arm to cause said support arm to be movable between an operating position wherein said support arm extends outwardly relative to said main hopper and a storage position wherein said support arm is folded inwardly towards said main hopper in relation to said operating position, said support arm further being pivotable about a second axis of rotation proximate said first end of said support arm to cause an elevation of said second end of said support arm to be adjustable;

a conveyor having a longitudinal axis and first and second ends, a conveyor hopper at said first end, a conveyor discharge at said second end, and an internal elevator for moving seed or grain from said conveyor hopper to said conveyor discharge; and

said second end of said support arm being coupled with said conveyor between said first and second conveyor ends, said conveyor being rotatable about a third axis of rotation proximate said second end of said support arm that is not parallel to said conveyor longitudinal axis, and said conveyor being rotatable in relation to said second end of said support arm about said third of axis of rotation between an unloading position wherein said conveyor hopper is disposed below said main hopper discharge to receive agricultural product from said main hopper and a loading position wherein said conveyor discharge is disposed above said intake opening of said main hopper to dispense agricultural product into said main hopper.

**11**. The seed or grain tender of claim **10**, wherein said first axis of rotation extends through said main hopper discharge.

**12**. The seed or grain tender of claim **10**, wherein said second axis of rotation extends through said first end of said support arm.

**13**. The seed or grain tender of claim **10**, wherein said third axis of rotation extends through said conveyor.

**14**. The seed or grain tender of claim **10**, wherein said third axis of rotation extends through said second end of said support arm.

**15**. The seed or grain tender of claim **10**, wherein said third axis of rotation extends through said conveyor and said second end of said support arm.

**16**. The seed or grain tender of claim **10**, wherein said third axis of rotation is oriented at an angle having a vertical component.

**17**. The seed or grain tender of claim **16**, wherein said first axis of rotation is vertical.

**18**. The seed or grain tender of claim **17**, wherein said second axis of rotation is horizontal.

**19**. The seed or grain tender of claim **10**, wherein said second end of said support arm is coupled with said conveyor at an approximate center of gravity of said conveyor.

**20**. The seed or grain tender of claim **10**, further comprising a hydraulic piston extending at an acute angle relative to a horizontal plane to connect with a portion of said support arm spaced from said second axis of rotation.

**21**. The seed or grain tender of claim **10**, further comprising a stand coupled with said first end of said conveyor and movable between a stowed position allowing said conveyor hopper to be positioned below said main hopper discharge when said conveyor is in said unloading position and an extended position supporting said conveyor hopper above the ground when said conveyor is in said loading position.

* * * * *

# EXHIBIT D

ROTHWELL FIGG
IP Professionals

607 14th Street, N.W.
Suite 800
Washington, D.C. 20005

Telephone 202-783-6040
Facsimile 202-783-6031
www.rfem.com
info@rfem.com

G. Franklin Rothwell
(1928-2011)

E. Anthony Figg
George R. Repper
Steven Lieberman
Joseph A. Hynds
Martin M. Zoltick
R. Danny Huntington
Joo Mee Kim
Richard Wydeven
Sharon L. Davis
Jeffrey L. Ihnen
Brian S. Rosenbloom
Sharon E. Crane, Ph.D.
Lisa N. Phillips
Steven P. Weihrouch
Robert P. Parker
Jenny L. Colgate
Leo M. Loughlin
Derek F. Dahlgren
Michael V. Battaglia
Seth E. Cockrum, Ph.D.

*Not a member of the D.C. Bar. Practice limited to patent, trademark and copyright matters and cases in federal courts.

Monica Chin Kitts
Michael H. Jones
Jennifer P. Nock
Rachel M. Echols
Brett A. Postal
Jennifer B. Maisel
Soumya P. Panda
Aydin H. Harston, Ph.D.
Daniel R. McCallum
Mark T. Rawls
Nechama E. Potasnick
Spencer J. Johnson
John D. Higgins
Douglas Choi
Eric D. Blatt
Benjamin R. Holt
Nicole M. DeAbrantes
Davide F. Schiavetti *
Caitlin M. Wilmot
D. Lawson Allen

Of Counsel
Harry F. Manbeck, Jr.

January 31, 2018

***VIA CERTIFIED MAIL AND EMAIL***

Mr. Dan Norwood, President
Mr. Bob Norwood, Founder
Norwood Sales Inc.
11202 38th St. S
Horace, ND 58047

Re: Infringement of Unverferth's U.S. Patent Nos. 8,221,047, 8,967,940 and 9,745,123

Dear Messrs. Norwood:

We represent Unverferth Manufacturing Company, Inc. ("Unverferth") in connection with intellectual property matters. Unverferth is an innovator of seed tender products and technology and is the owner of U.S. Patent Nos. 8,221,047 ("the '047 patent"), 8,967,940 ("the '940 patent"), and 9,745,123 ("the '123 patent") (collectively, "the Unverferth Patents") directed to seed tender products. Unverferth also manufactures and sells its Seed Runner® seed tender products, which are embodiments of the inventions disclosed in the Unverferth Patents.

Unverferth has become aware of Norwood Sales Inc.'s ("Norwood's") Seed Shuttle seed tender products, which we believe infringe the Unverferth Patents. In Exhibits A-D to this letter, we include claim charts and figures illustrating how Norwood's Seed Shuttle products infringe exemplary claims of the '047 patent (Ex. E), the '940 patent (Ex. F), and the '123 patent (Ex. G). In view of Norwood's infringement of the Unverferth Patents, we believe that Unverferth is entitled to an injunction preventing the continued manufacture, sale, and/or offer for sale of Norwood's Seed Shuttle products, as well as damages for Norwood's infringing activities. In addition, Unverferth believes that Norwood's infringement has been willful, which could subject Norwood to treble damages and Unverferth's attorney's fees in any patent infringement action.

Without waiving any of our client's rights, we hereby demand that you immediately cease-and-desist any and all infringing activities, including the manufacture, sale, and/or offer for sale of Norwood's Seed Shuttle products.

We also request that Norwood provide us with documentation identifying the number of Norwood's Seed Shuttle units sold to date, as well as the net sales figures for those sales, so that we can adequately assess past damages. We request that Norwood comply in a satisfactory manner within twenty ("20") days of the date of this letter.

ROTHWELL FIGG
IP Professionals

Mr. Dan Norwood & Mr. Bob Norwood
January 31, 2018

We hope that you will understand our client's need to protect its intellectual property rights. If Norwood does not cease and desist from its infringing activities and provide Unverferth with the requested sales information, we will consider pursuing any and all legal remedies available to Unverferth. These demands are made without prejudice to all available claims and remedies Unverferth may have based upon your unlawful acts.

Thank you for your attention to this matter.

Very truly yours,

Joseph A. Hynds

JAH:BAP

# EXHIBIT A

**EXHIBIT A**

**U.S. Patent No. 8,221,047**

| U.S. Patent No. 8,221,047 | Norwood Sales' Seed Shuttle Products *(References to Figures are to Exhibit D)* |
|---|---|
| **Claim 1** | |
| A seed or grain tender comprising: | The Seed Shuttle is a seed or grain tender. Figure 1. |
| a frame; | The Seed Shuttle includes a frame. Figures 1-3. |
| a main hopper mounted on said frame and having a main hopper discharge; | The Seed Shuttle includes a main hopper mounted on the frame. Figures 1 and 6. The main hopper also includes a main hopper discharge. Figures 1-3. |
| a base mounted on said frame below said main hopper discharge; | The Seed Shuttle includes a base mounted on the frame below (or lower than) the main hopper discharge. Figures 1-3. |
| a support arm having first and second ends; | The Seed Shuttle includes a support arm with first and second ends. Figures 1-6. |
| a first coupling connecting said first end of said support arm with said base, said first coupling being rotatable in relation to said base about a first vertical axis of rotation, | The Seed Shuttle includes a first coupling connecting the first end of the support arm with the base. Figure 2. The first coupling is rotatable in relation to the base about a first vertical axis of rotation. Figures 2-3. |
| and said first end of said support arm being rotatable in relation to said first coupling about a first horizontal axis of rotation; | The first end of the Seed Shuttle's support arm is rotatable in relation to the first coupling about a first horizontal axis of rotation. Figure 2. |
| a conveyor having a longitudinal axis and first and second ends, a conveyor hopper at said first end, a conveyor discharge at said second end, and a motor-driven elevator for moving seed or grain from said conveyor hopper to said conveyor discharge; and | The Seed Shuttle includes a conveyor having a longitudinal axis and first and second ends. Figures 1 and 6. The conveyor includes a conveyor hopper at the first end, a conveyor discharge at the second end, and a motor-driven elevator for moving seed or grain from the conveyor hopper to the conveyor discharge. Figures 1 and 6. |
| a second coupling connecting said second end of said support arm with said conveyor at an approximate center of gravity of said conveyor, said second coupling defining a second vertical axis of rotation that is not parallel to said conveyor longitudinal axis, | The Seed Shuttle includes a second coupling connecting the second end of the support arm with the conveyor at an approximate center of gravity of the conveyor. Figures 1, 4, and 6. The second coupling defines a second vertical axis of rotation that is not parallel to the conveyor longitudinal axis. Figures 1 and 4. |

| U.S. Patent No. 8,221,047 | Norwood Sales' Seed Shuttle Products *(References to Figures are to Exhibit D)* |
|---|---|
| and said conveyor being rotatable in relation to said second end of said support arm about said second vertical axis of rotation between an unloading position wherein said conveyor hopper is disposed below said main hopper discharge to receive agricultural product from said main hopper and a loading position wherein said conveyor discharge is disposed above said main hopper to dispense agricultural product into said main hopper. | The Seed Shuttle has a conveyor that is rotatable in relation to the second end of the support arm about the second vertical axis of rotation between an unloading position (Figure 1) wherein the conveyor hopper is disposed below the main hopper discharge to receive agricultural product from the main hopper and a loading position (Figure 6) wherein the conveyor discharge is disposed above the main hopper to dispense agricultural product into the main hopper. |

# EXHIBIT B

**EXHIBIT B**
**U.S. Patent No. 8,967,940**

| U.S. Patent No. 8,967,940 | Norwood Sales' Seed Shuttle Products *(References to Figures are to Exhibit D)* |
|---|---|
| **Claim 16** | |
| A seed or grain tender comprising: | The Seed Shuttle is a seed or grain tender. Figure 1. |
| a main hopper having a main hopper discharge; | The Seed Shuttle includes a main hopper having a main hopper discharge. Figures 1-3. |
| a base positioned below said main hopper; | The Seed Shuttle includes a base positioned below the main hopper. Figures 1-3. |
| a support arm having first and second ends; | The Seed Shuttle includes a support arm with first and second ends. Figures 1-6. |
| a first coupling connecting said first end of said support arm with said base, said first coupling being rotatable about a first vertical axis of rotation, | The Seed Shuttle includes a first coupling connecting the first end of the support arm with the base. Figure 2. The first coupling is rotatable about a first vertical axis of rotation. Figures 2-3. |
| and said first end of said support arm being rotatable about a first horizontal axis of rotation; | The first end of the Seed Shuttle's support arm is rotatable about a first horizontal axis of rotation. Figure 2. |
| a conveyor having a longitudinal axis and first and second ends, a conveyor hopper at said first end, and conveyor discharge at said second end; and | The Seed Shuttle includes a conveyor having a longitudinal axis and first and second ends. Figures 1 and 6. The conveyor includes a conveyor hopper at the first end and a conveyor discharge at the second end. Figures 1 and 6. |
| a second coupling connecting said second end of said support arm with said conveyor at an approximate center of gravity of said conveyor, said second coupling defining a first conveyor axis of rotation that is not parallel to said conveyor longitudinal axis, | The Seed Shuttle includes a second coupling connecting the second end of the support arm with the conveyor at an approximate center of gravity of the conveyor. Figures 1, 5, and 6. The second coupling defines a first conveyor axis of rotation that is not parallel to the conveyor longitudinal axis. Figure 5. |
| and said conveyor being rotatable about said first conveyor axis of rotation between an unloading position wherein said conveyor hopper is disposed below said main hopper discharge to receive agricultural product from said main hopper and a loading position wherein said conveyor discharge is disposed above said main hopper to dispense agricultural product into said main hopper. | The Seed Shuttle has a conveyor that is rotatable about the first conveyor axis of rotation between an unloading position (Figure 1) wherein the conveyor hopper is disposed below the main hopper discharge to receive agricultural product from the main hopper and a loading position (Figure 6) wherein the conveyor discharge is disposed above the main hopper to dispense agricultural product into the main hopper. |

# EXHIBIT C

**EXHIBIT C**
**U.S. Patent No. 9,745,123**

| U.S. Patent No. 9,745,123 | Norwood Sales' Seed Shuttle Products *(References to Figures are to Exhibit D)* |
|---|---|
| **Claim 1** | |
| A seed or grain tender comprising: | The Seed Shuttle is a seed or grain tender. Figure 1. |
| a main hopper having a main hopper discharge; | The Seed Shuttle includes a main hopper having a main hopper discharge. Figure 1-3. |
| a support arm having first and second ends; | The Seed Shuttle includes a support arm having first and second ends. Figures 1-6. |
| said first end of said support arm being located below said main hopper and being rotatable about a first axis of rotation, | The Seed Shuttle includes a first of the support arm that is located below the main hopper and is rotatable about a first axis of rotation. Figures 1-3. |
| and said first end of said support arm being rotatable about a second axis of rotation that is perpendicular to said first axis of rotation; | The Seed Shuttle includes a first end of the support arm that is rotatable about a second axis of rotation that is perpendicular to the first axis of rotation. Figures 3. |
| a conveyor having a longitudinal axis and first and second ends, a conveyor hopper at said first end, a conveyor discharge at said second end, and an internal elevator for moving seed or grain from said conveyor hopper to said conveyor discharge; | The Seed Shuttle includes a conveyor having a longitudinal axis and first and second ends. Figures 1 and 6. The conveyor includes a conveyor hopper at the first end, a conveyor discharge at the second end, and a motor-driven elevator for moving seed or grain from the conveyor hopper to the conveyor discharge. Figures 1 and 6. |
| said second end of said support arm being coupled with said conveyor between said first and second ends of said conveyor, | The Seed Shuttle includes a second end of the support arm that is coupled with the conveyor between the first and second ends of the conveyor. Figures 1 and 5. |
| said conveyor being rotatable about a third axis of rotation at said second end of said support arm that is not parallel to said conveyor longitudinal axis, | The Seed Shuttle has a conveyor that is rotatable about a third axis of rotation at the second end of the support arm that is not parallel to the conveyor longitudinal axis. Figure 5. |
| and said conveyor being rotatable in relation to said second end of said support arm about said third of axis of rotation between an unloading position wherein said conveyor hopper is disposed below said main hopper discharge to receive agricultural product from said main hopper and a loading position wherein said conveyor discharge is disposed above said main hopper to dispense agricultural product into said main hopper, and | The Seed Shuttle has a conveyor that is rotatable in relation to the second end of the support arm about a third axis of rotation between an unloading position (Figure 1) wherein the conveyor hopper is disposed below the main hopper discharge to receive agricultural product from the main hopper and a loading position (Figure 6) wherein the conveyor discharge is disposed above the main hopper to dispense agricultural product into the main hopper. |

| U.S. Patent No. 9,745,123 | Norwood Sales' Seed Shuttle Products *(References to Figures are to Exhibit D)* |
|---|---|
| a hydraulic piston extending at an acute angle relative to a horizontal plane to connect with a portion of said support arm spaced from said second axis of rotation. | The Seed Shuttle includes a hydraulic piston extending at an acute angle relative to a horizontal plane to connect with a portion of said support arm spaced from said second axis of rotation. Figure 2. |

# EXHIBIT D

FIGURE 1
UNLOAD POSITION
MAIN HOPPER DISCHARGE
CONVEYOR DISCHARGE
MAIN HOPPER
CONVEYOR
FRAME
CONVEYOR HOPPER
SUPPORT ARM
SECOND COUPLING

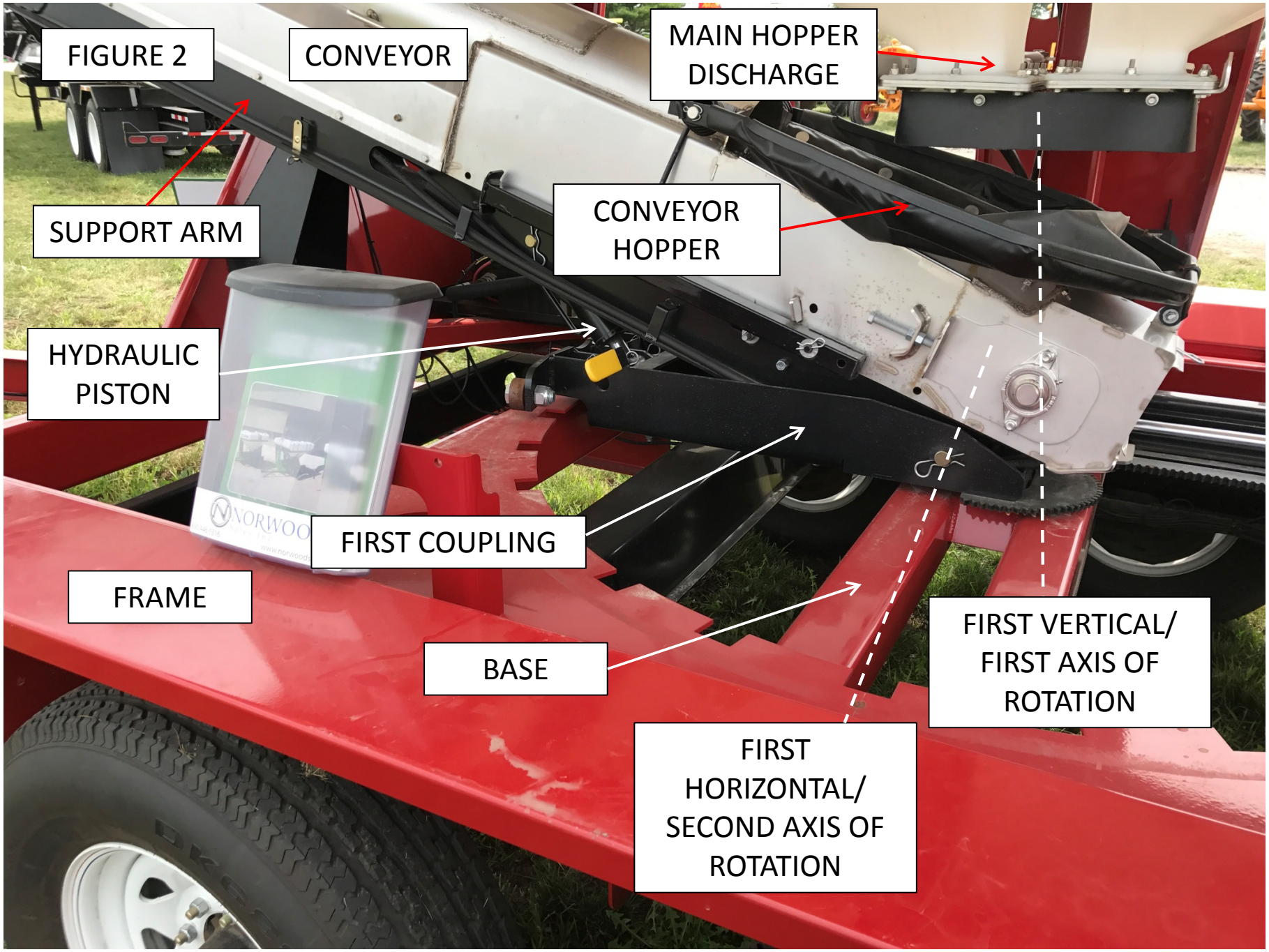
FIGURE 2
CONVEYOR
MAIN HOPPER DISCHARGE
SUPPORT ARM
CONVEYOR HOPPER
HYDRAULIC PISTON
FIRST COUPLING
FRAME
BASE
FIRST VERTICAL/ FIRST AXIS OF ROTATION
FIRST HORIZONTAL/ SECOND AXIS OF ROTATION

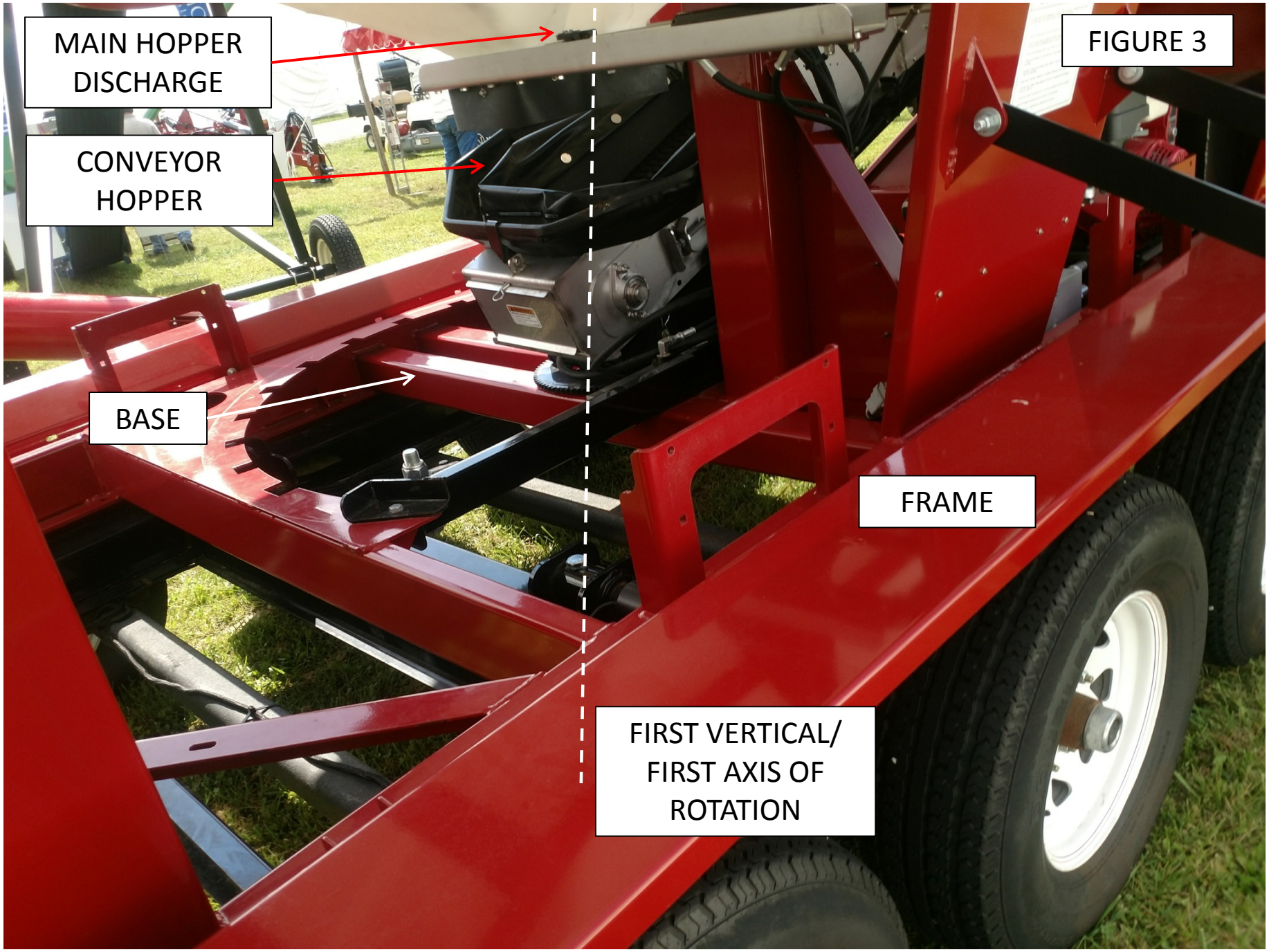
MAIN HOPPER DISCHARGE
CONVEYOR HOPPER
BASE
FIGURE 3
FRAME
FIRST VERTICAL/ FIRST AXIS OF ROTATION

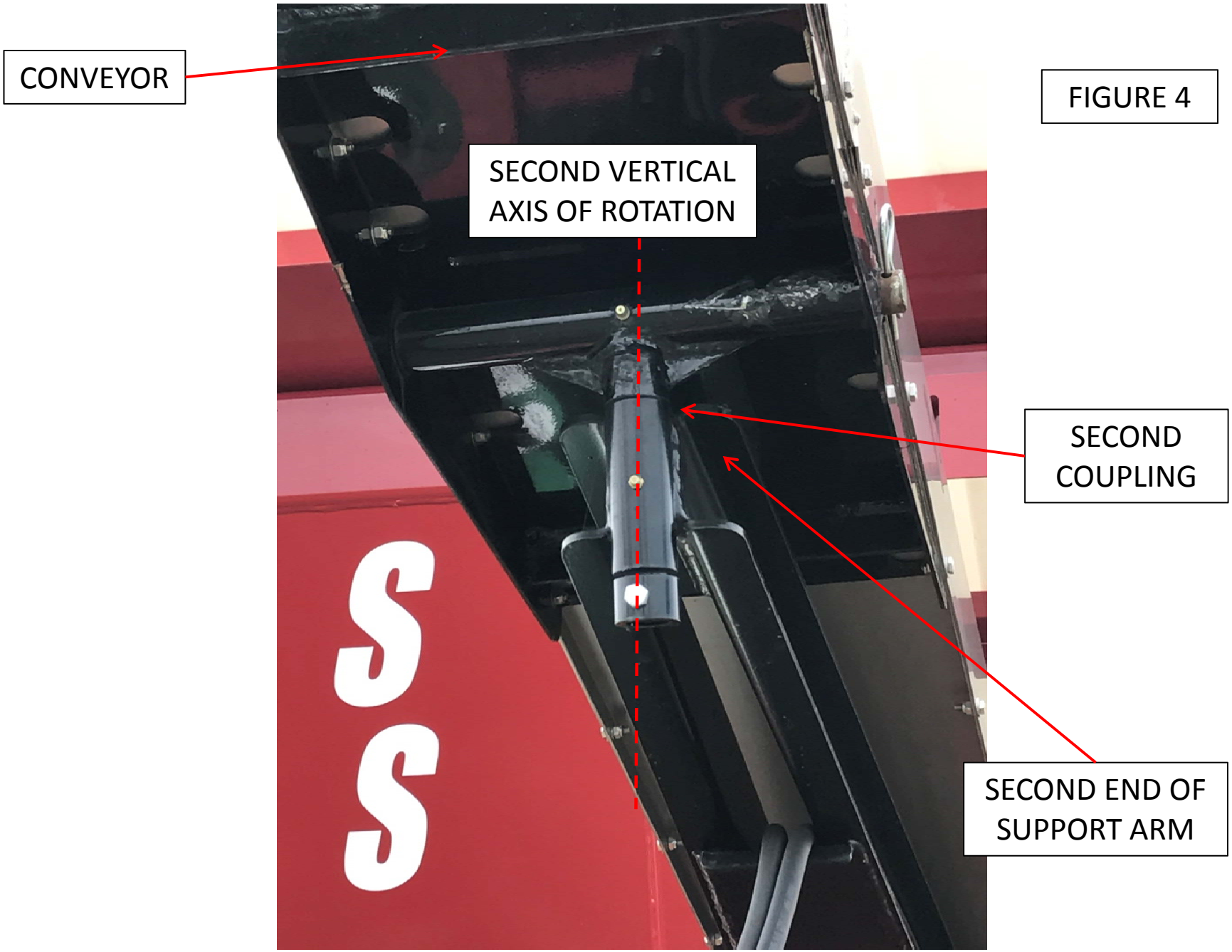
CONVEYOR
SECOND VERTICAL AXIS OF ROTATION
SECOND COUPLING
SECOND END OF SUPPORT ARM
S
S

FIGURE 4

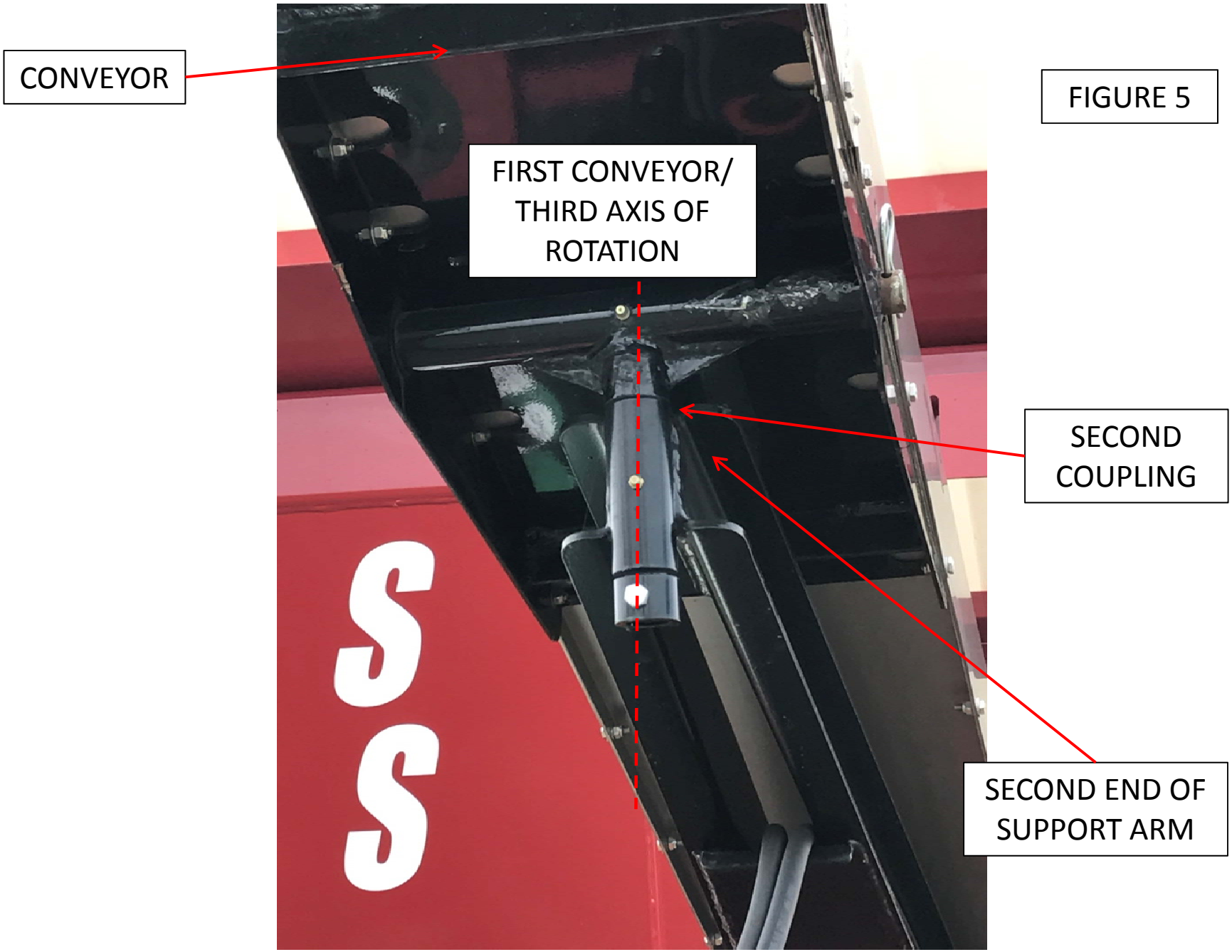
CONVEYOR
FIRST CONVEYOR/ THIRD AXIS OF ROTATION
SECOND COUPLING
SECOND END OF SUPPORT ARM
S
S

FIGURE 5

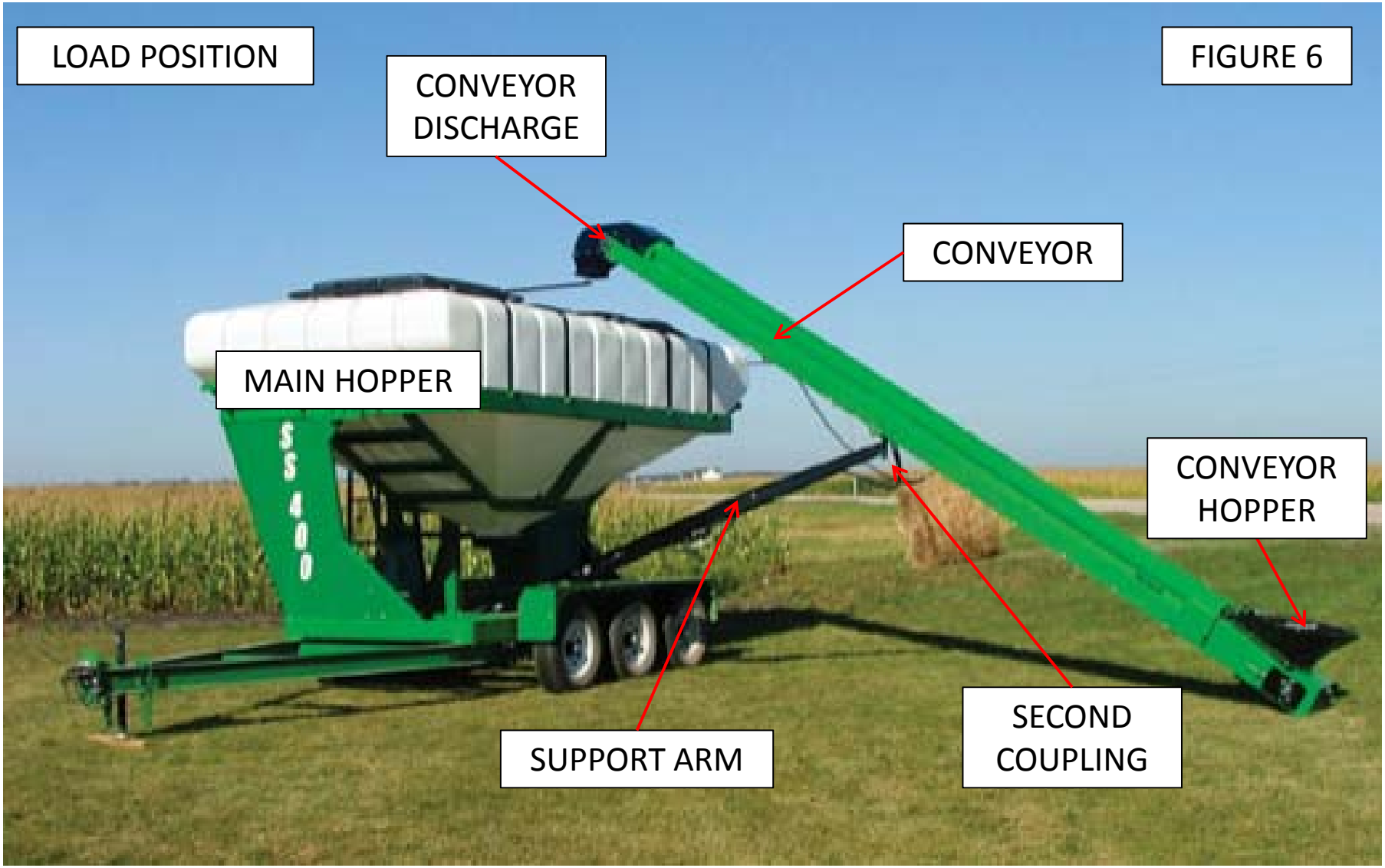
LOAD POSITION
FIGURE 6
CONVEYOR DISCHARGE
CONVEYOR
MAIN HOPPER
CONVEYOR HOPPER
SECOND COUPLING
SUPPORT ARM

# EXHIBIT E

## THE FUTURE OF SEED TENDERS IS HERE!

The all NEW *SEED SHUTTLE* ***290, 400 & 500*** are the first all non-corrosive poly tank Seed Tenders on the market today. Their unique features such as both side and rear discharge unloading positions, and a heavy duty frame designed for tough commercial and farm use. In addition to easy see handling, you are able to use your ***SEED SHUTTLE 290, 400 & 500*** as a water tank as well…making them the most versatile tender on the market.

The ***SEED SHUTTLE*** brand of seed tenders is the only tender on the market with non-corrosive poly tanks. Seed Shuttle comes in three different sizes and three different configurations. Customers can choose any configuration between, just the tender to be put on your trailer, seed tender on our trailer with bumper hitch, to the seed tender on our trailer with a gooseneck hitch. The sizes are measured in units with three different models available.The smallest unit machine is the ***SS290*** rated at 290 units, next is the all new ***SS400*** rated at 400 units, and the largest the ***SS500*** rated at 500 units.

# SEED SHUTTLE

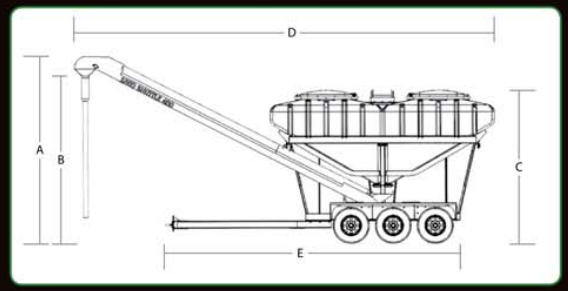


### SEED SHUTTLE 400

A. 13'- 4½"
B. 11'- 8"
C. 10'- 11¼"
D. 29'- 11½"
E. 23'- 4"

### SEED SHUTTLE 290

A. 13'- 4"
B. 11'- 8"
C. 10'- 6"
D. 33'- 6"
E. 17'- 2"

### SEED SHUTTLE 500

A. 13'- 4½"
B. 11'- 8"
C. 12'- 4"
D. 30'- 1"
E. 22'- 11"

NORWOOD Sales Inc.
**800-446-0316**
**www.norwoodsales.com**

# SEED SHUTTLE

*Manufactured by:*

NORWOOD Sales Inc.

# SEED SHUTTLE 290

## FEATURES:

- 182 degree conveyor swivel with both side and rear unloading positions
- 2 – 145 unit poly tanks with independent slide controls
- 2 – 45" X 27" sealed lid openings
- Wireless remote with infinite belt speed control
- 8" diameter tube 24' long conveyor for extra reach for center-fill planters
- 10" wide all rubber belt, 1,800 lbs. per minute
- Enclosed belt on return of conveyor
- 17 locking positions on the conveyor
- Transport lock on the conveyor for safety
- 3 piece telescoping downspout
- 5.5 Honda motor, with electric start and centrifugal clutch
- 18" wide catwalk with side ladder access
- Powder Coated Frame
- Heavy Duty Frame (4500lb approximate weight)

### OPTIONS

- Trailer with 2-7000lb torsion axles and adjustable hitch
- Weigh scales
- Kit to convert to water tanks
- Inoculator kit

290

# SEED SHUTTLE 400

*Shown with option Self Loader conveyor.

### OPTIONS

- Gooseneck trailer with (3) 7,000lb Heavy Duty Torsion axles
- Pintle Hitch trailer with (3) 7,000lb Heave Duty Torsion axles
- Weigh Scale Kit
- Liquid Conversion Kit
- Inoculator Kit

400

# SEED SHUTTLE 500

## SS400 & 500 FEATURES:

- 180° conveyor swivel with both side and rear unloading positions
- (2) – 200 unit poly tank (SS400) with independent slide controls
- (2) – 250 unit poly tank (SS500) with independent slide controls
- (2) – 40" square sealed lid openings
- Wireless remote with infinite belt speed control
- 8" diameter, 24' long tube conveyor for extra reach for center-fill planters
- 10" wide all rubber belt, 1,800 lbs per minute
- Enclosed belt on return side of the conveyor
- 15 conveyor locking positions
- Transport support lock on conveyor for safety
- (3) piece telescoping downspout
- 5.5 hp Honda motor with electric start and centrifugal clutch
- 18" wide catwalk with ladder access from the side
- Durable powder coat finish
- Heavy Duty all steel frame

### OPTIONS

- 8" 20' Conveyor (Lower Height Clearance)
- Gooseneck trailer with (2) 12,000lb Heavy Duty axles

500

# EXHIBIT F

**2016**

# SEED SHUTTLE

# SS400 - SS500
# Owners Manual

NORWOOD
Sales Inc.
11202 38th St S, Horace, ND 58047

Read this manual before operating your Norwood equipment. The information presented will prepare you to do a better and safer job. Keep this manual handy for ready reference. Require all operators to read this manual carefully and become acquainted with all the adjustment and operating procedures before attempting to operate. Replacement manuals can be obtained from your dealer.

The equipment you have purchased has been carefully engineered and manufactured to provide dependable and satisfactory use. Like all mechanical products, it will require cleaning and upkeep. Lubricate the unit as specified. Observe all safety information in this manual and safety decals on the equipment.

Use only genuine Noorwood service parts. Substitute parts will void the warranty and may not meet standards required for safe and satisfactory operation. Record the model number and serial number of your equipment in the spaces provided:

Model: _____ Date of Purchase: _____

Serial Number: _____

Provide this information to your dealer to obtain correct repair parts.

Throughout this manual, the term **IMPORTANT** is used to indicate that failure to observe can cause damage to equipment. The terms **CAUTION**, **WARNING** and **DANGER** are used in conjunction with the Safety-Alert Symbol, (a triangle with an exclamation mark), to indicate the degree of hazard for items of personal safety.

This Safety-Alert Symbol indicates a hazard and means ATTENTION! BECOME ALERT! YOUR SAFETY IS INVOLVED!

Indicates an imminently hazardous situation that, if not avoided, will result in death or serious injury.

Indicates a potentially hazardous situation that, if not avoided, could result in death or serious injury, and includes hazards that are exposed when guards are removed

Indicates a potentially hazardous situation that, if not avoided, may result in minor or moderate injury.

Indicates that failure to observe can cause damage to equipment.

Indicates helpful information.

# Table of Contents

Introduction ..... Inside Front Cover
General Information ..... 3
Dimensions & Specifications ..... 5
Safety & Instructional Decals ..... 6
Safety ..... 9
Operation ..... 13
Maintenance ..... 15
Trouble Shooting ..... 21
Hydraulic Diagrams ..... 24
Wire Schematics ..... 28
Warranty Registration & Inspection Report ..... 30
Warranty Policy ..... 31

# General Information

The purpose of this manual is to assist you in operating and maintaining your Seed Shuttle. Read it carefully. It furnishes information and instructions that will help you achieve years of dependable performance. These instructions have been compiled from extensive field experience and engineering data. Some information may be general in nature due to unknown and varying operating conditions. However, through experience and these instructions, you should be able to develop procedures suitable to your particular situation.

The illustrations and data used in this manual were current at the time of printing, but due to possible in-line production changes, your machine may vary slightly in detail. We reserve the right to redesign and change the machines as may be necessary without notification.

**WARNING**

***Some illustrations in this manual show the Seed Shuttle with safety shields removed to provide a better view. The Seed Shuttle should never be operated with any safety shielding removed.***

Throughout this manual, references are made to right and left direction. These are determined by standing behind the equipment facing the direction of forward travel.

# Dimensions & Specifications

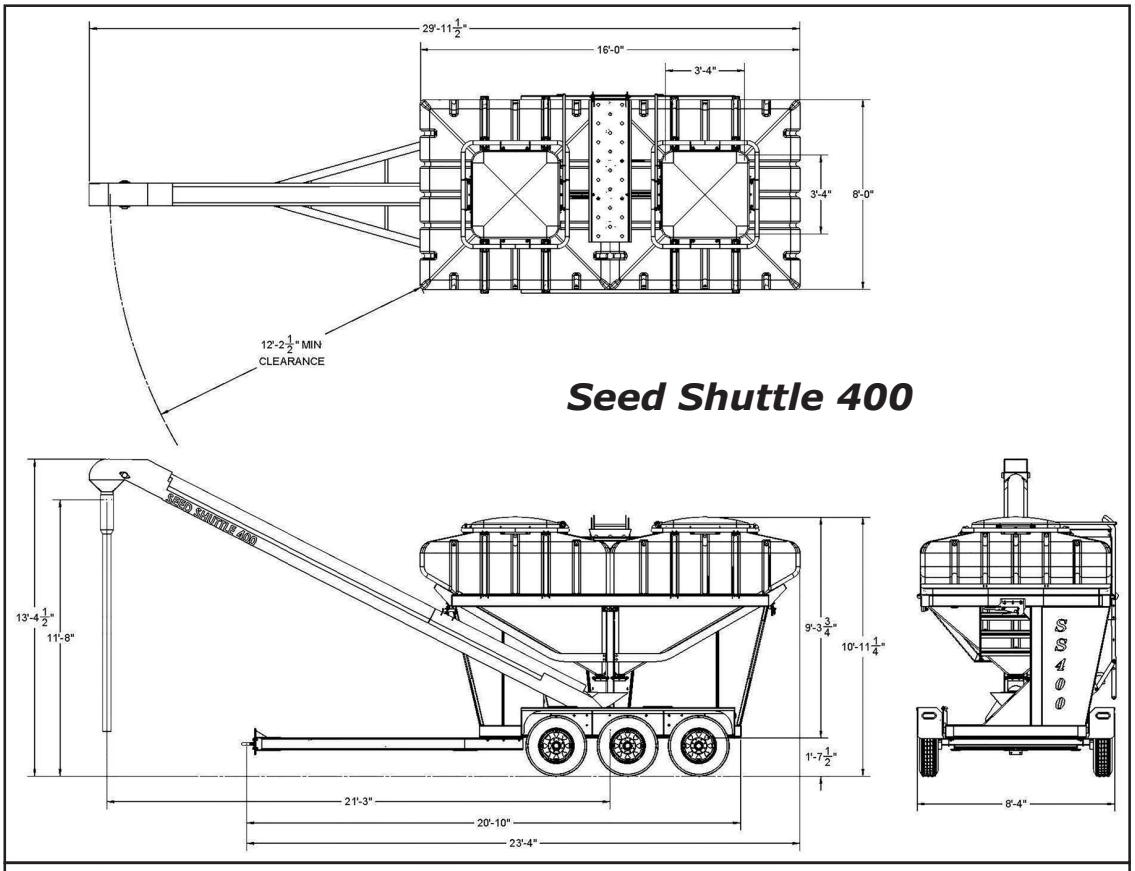


**Seed Shuttle 400**

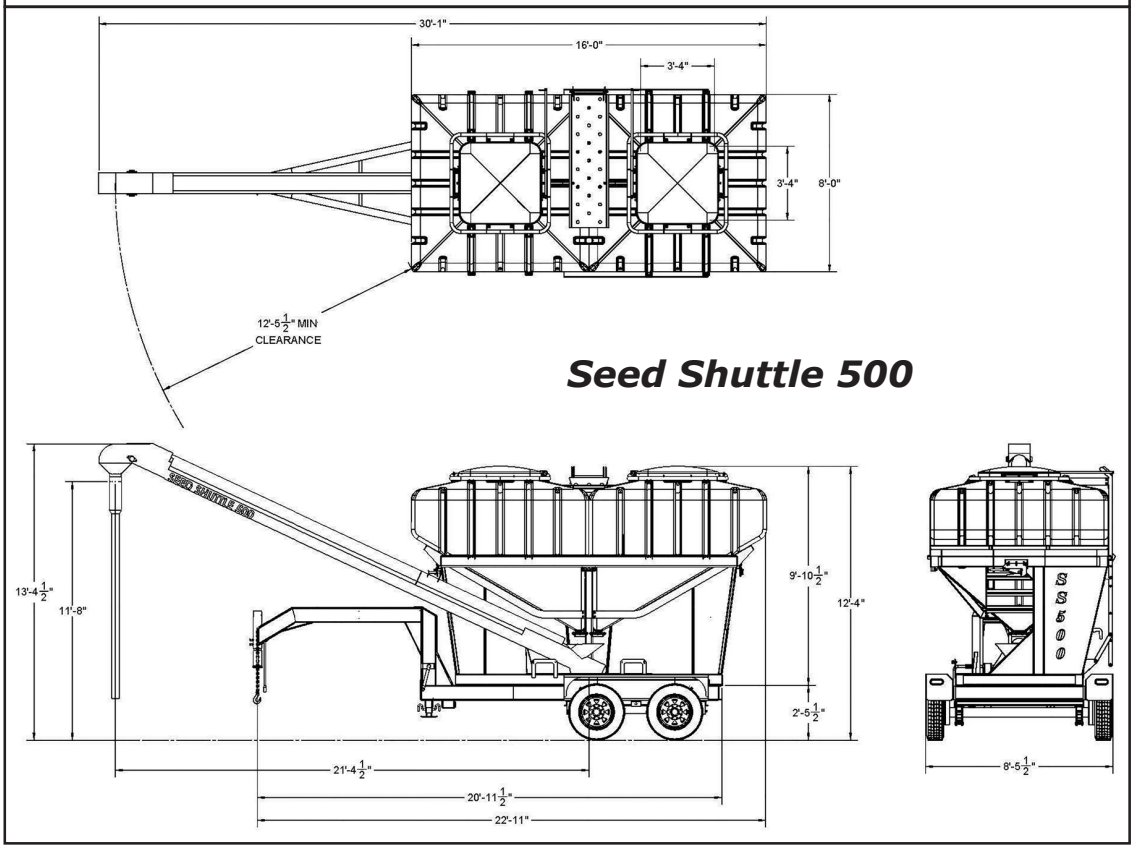


**Seed Shuttle 500**

# Safety & Instructional Decals

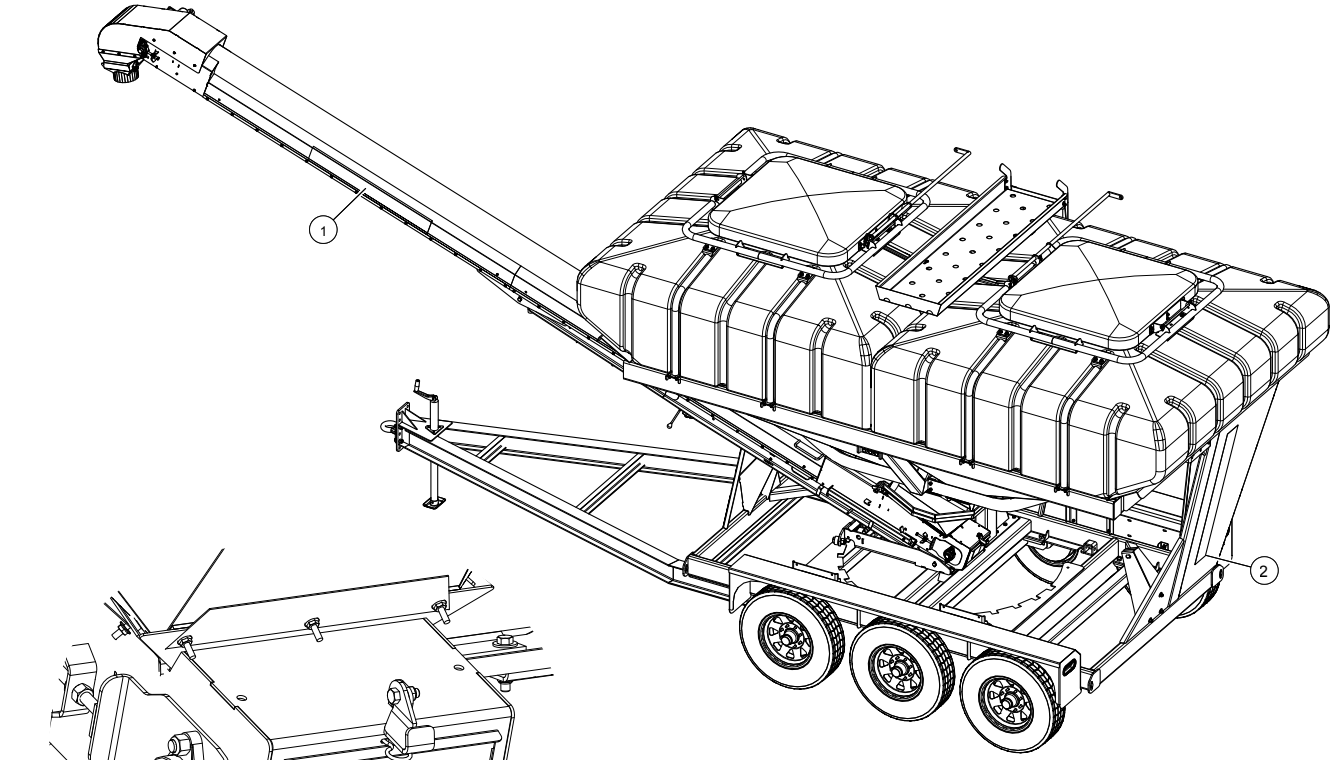


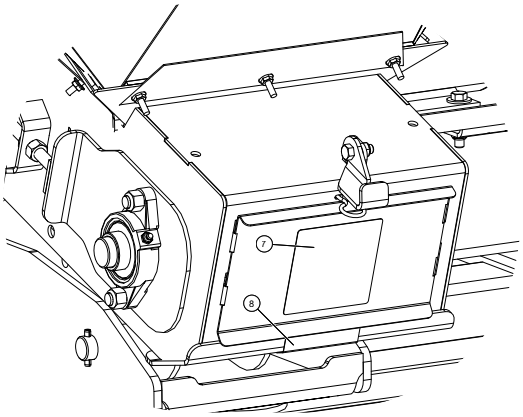


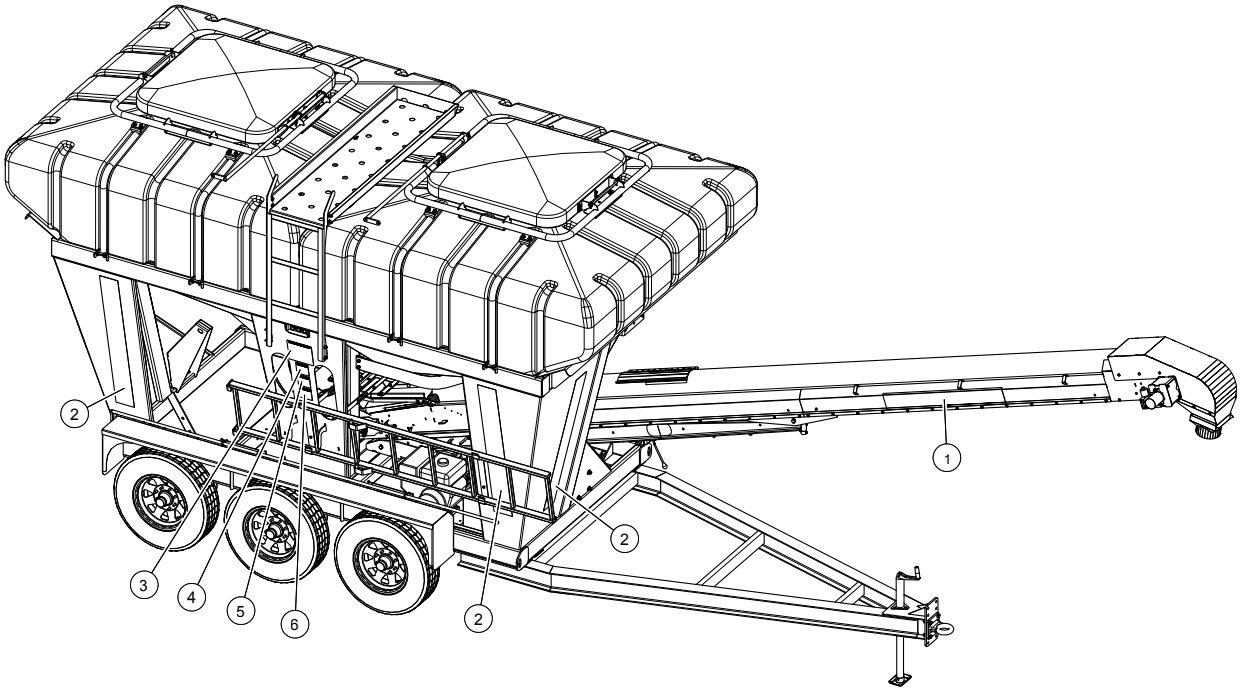

# Safety & Instructional Decals

| | | |
|---|---|---|
| **1.** | 90-44-0015<br>Decal, Seed<br>Shuttle 400<br>Horizontal | 90-44-0016<br>Decal, Seed<br>Shuttle 500<br>Horizontal |

| | | |
|---|---|---|
| **2.** | 90-44-0014<br>Decal, Seed<br>Shuttle 400<br>Vertical | 90-44-0001<br>Decal, Seed<br>Shuttle 500<br>Vertical |

**WARNING**

**MISSING GUARD HAZARD**

**To prevent injury or death:**

1. Shut off and lockout power source
2. Reattach guard

**8.** 90-44-0021
Decal, Missing Guard

**OPERATING INSTRUCTIONS**

THE SEED SHUTTLE IS DESIGNED TO SAFELY AND EFFICIENTLY TRANSPORT BULK SEED OR FERTILIZER TO THE FIELD AND FILL YOUR PLANTERS OR DRILL.

1. MOVE THE SEED SHUTTLE INTO POSITION TO FILL YOUR PLANTER OR DRILL.
2. UNLATCH AND UNLOCK CONVEYOR FROM TRANSPORT POSITION, SWING AND LOCK INTO POSITION SO DISPENSER SPOUT IS ABOVE PLANTER.
3. START HONDA ENGINE RUN AT IDLE POSITION (SEE HONDA MANUAL).
4. TURN ON/OFF SWITCH TO ON POSITION TO USE REMOTE CONTROL THROTTLE FEATURE.
5. RUN BELT AT SELECTED SPEED USING REMOTE THROTTLE TRANSMITTER OR MANUAL THROTTLE FEATURE.
6. MOVE GATE CONTROL HANDLES TO DESIRED OPENING FOR MATERIAL DISCHARGE.
7. CONTROL BELT SPEED USING REMOTE THROTTLE TRANSMITTER OR MANUAL THROTTLE SWITCH.
8. CLOSE GATE WHEN PLANTER IS FULL, CONTINUE RUNNING UNTIL BELT IS EMPTY.
9. TURN OFF HONDA ENGINE AND ON/OFF SWITCH FOR RECEIVER.
10. SECURE AND LOCK CONVEYOR INTO TRANSPORT POSITION.

**3.** 90-44-0005
Decal, Seed Shuttle Operating Instructions

**CAUTION**

- Read and understand operator's manual before operating.
- Keep all safety devices in place.
- Do not adjust, service, lubricate, clean, unclog or move the mechanism while motor is in operation.
- When transporting be extremely careful of obstacles (Example: Overhead lines) and only use moderate speeds.
- Make certain everyone is clear of the equipment before applying power. Never allow children in the vicinity.

**4.** 90-44-0004
Decal, Caution Read Operators Manual

**CAUTION**

To prevent the possibility of an unbalanced load keep tanks evenly filled. Do not load material in back tank only.

**5.** 90-44-0002
Decal, Caution Even Fill

**WARNING**

**ROTATING PART HAZARD**

To prevent serious injury or death:

1. Keep hands, feet, clothing and hair away from moving parts.
2. Do not operate with guards removed.
3. Keep others away from moving parts.

**7.** 90-44-0020
Decal, Warning Rotating Part Hazard

**CAUTION**

ALL BELT GUARDS MUST BE IN PLACE AND SECURE

BEWARE OF POWER LINES

**6.** 90-44-0003
Decal, Caution Guards & Power Lines

# Safety

Safety is a primary concern in the design and manufacture of our products. Unfortunately, our efforts to provide safe equipment can be wiped out by a single careless act of an operator.

In addition to the design and configuration of equipment, hazard control and accident prevention are dependent upon the awareness, concern, prudence and proper training of personnel involved in the operation, transport, maintenance and storage of equipment.

It has been said "The best safety device is an informed, careful operator." We ask you to be that kind of an operator.

## General Safety

- Read and understand the Operator's Manual before operating, maintaining, adjusting or unplugging the Seed Shuttle.
- Only trained competent persons shall operate the seed shuttle. An untrained operator is not qualified to operate the machine.
- Have a first-aid kit available for use should the need arise and know how to use it.
- Provide a fire extinguisher for use in case of an accident. Store in a highly visible place.
- Wear appropriate protective equipment. This list includes but is not limited to:
  - ✓ Hard Hat
  - ✓ Protective Shoes
  - ✓ Protective Goggles
  - ✓ Heavy Gloves
  - ✓ Hearing Protection
  - ✓ Respirator or Filter Mask
- Stop engine, remove ignition key and wait for all moving parts to stop before servicing, adjusting, repairing, or unplugging.
- Review safety related items annually with all personnel who will be operating or maintaining the Seed Shuttle.
- Be familiar with machine hazard area. If anyone enters hazard areas, shut down machine immediately. Clear the area before restarting.
- Keep hands, feet and clothing away from all moving and/or rotating parts.
- Do not operate machine with any guards removed.
- Clear the area of bystanders when carrying out any maintenance and repairs or making any adjustments.
- Before resuming work, install and secure all guards when maintenance work is completed.

## Refueling Safety

- Refer to Honda Owner's Manual.
- Handle Fuel with Care. It is highly flammable.
- Allow engine to cool before refueling. Clean up spilled fuel before restarting engine.
- Fill Fuel tank outdoors.
- Prevent fires by keeping machine clean of accumulated grease and debris.

## Storage Safety

- Refer to Honda Owner's Manual.
- Store the unit in an area away from human activity.
- Do not permit children to play on or around the stored machine.

# Safety

## Battery Safety

- Refer to Honda Owner's Manual.
- Keep all sparks and flames away from batteries, as gas given off by electrolyte is explosive.
- Avoid contact with battery electrolyte: Wash off any spilled electrolyte immediately.
- Wear Safety glasses when working near batteries.
- Do not tip batteries.
- To avoid injury from spark or short circuit, disconnect batter ground cable before servicing any part of the electrical system.

## Gas Engine Safety

**WARNING**

***Read and understand the operating and maintenance instructions that came with your honda engine***

**DO NOT** run engine in an enclosed area. Exhaust gases contain carbon monoxide, an odorless and deadly poison.

**DO NOT** place hands or feet near moving or rotating parts.

**DO NOT** refuel indoors or in an area that is not well ventilated. Outdoor refueling is preferred.

**DO NOT** fill fuel tank while engine is running. Allow engine to cool before refueling.

**Store** fuel in an approved safety container only.

**DO NOT** remove fuel cap while engine is running.

**DO NOT** operate engine if fuel is spilled. Move machine away from the spill.

**DO NOT** smoke when filling fuel tank.

**DO NOT** choke carburetor to stop engine. Whenever possible, gradually reduce engine speed before stopping.

**DO NOT** run engine above recommended speeds.

**DO NOT** tamper with governor springs, governor links or other parts which may increase the governed engine speed.

**DO NOT** tamper with the engine speed selected by the original equipment manufacturer.

**DO NOT** check for spark with spark plug or spark plug wire removed. Use an approved tester.

**DO NOT** crank engine with spark plug removed. If engine is flooded, place throttle in "FAST" position and crank until motor starts.

**DO NOT** strike flywheel with a hard object or metal tool as this may cause flywheel to shatter in operation. Use proper tools to service engine.

**DO NOT** operate engine without muffler.

**DO NOT** operate engine with an accumulation of grain dust, dirt or other combustible materials in the muffler area.

**DO NOT** touch hot muffler, cylinder or fins. Contact my cause burns.

**DO NOT** run engine with air cleaner or cleaner cover removed.

# Safety

## Transportation Safety

- Before transporting verify the following:
  - ✓ Conveyor swing base is locked into position.
  - ✓ Upper conveyor support latch is closed, locking conveyor in place.
  - ✓ Lids on poly tanks are securely latched in closed position.
  - ✓ Down spout is in transport or secured position.
  - ✓ Safety chains are attached and in good condition.
  - ✓ Hitch is adjusted so that the Seed Shuttle sits level for towing.
  - ✓ Both poly tanks are evenly filled. **DO NOT LOAD** material in back tank only!
- Refer to Honda Owner's Manual for engine transport.
- Block wheels when Seed Shuttle is not in transport.
- Remove all loose objects before transport.
- Stay away from overhead obstructions and power lines during operation and transportation.
- Use care on unlevel surfaces and when cornering to avoid tipping. The Seed Shuttle has a High Center of Gravity.

# Operation

The Seed Shuttle is designed to safely and efficiently transport bulk seed or fertilizer to the field and fill your planter or drill.

Review all safety, maintenance and operation information before operating the Seed Shuttle.

## Operating Instructions

1. Move the Seed Shuttle into position to fill your planter or drill.
2. Unlatch and unlock conveyor from transport position. Rotate the conveyor and lock into position so the dispenser spout is above planter.
3. Unhook downspout and position to dispense in planter.
4. Start Honda Engine and run at idle speed *(see Honda Owner's Manual)*.
5. Turn receiver on/off switch to on position to use remote control throttle feature.
6. Operate belt at desired speed using the remote throttle transmitter or manual throttle control feature.
7. Adjust slide gates to desired material flow using the gate control handles. BOTH TANKS SHOULD BE EMPTIED EVENLY TO AVOID AN UNSTABLE CONDITION.
8. Control belt speed while filling by using the remote throttle transmitter or the manual control switch.
9. Close the slide gates when planter is full, allowing the conveyor to run until the belt is completely empty.
10. Turn off Honda Engine and on/off switch for receiver.
11. Return downspout to transport or secured position.
12. Rotate conveyor to secure and lock in transport position.

## Wireless Instructions

***Programming Instructions:***

Each transmitter has its own unique internal address. The receiver needs to be programmed to respond only to the specific transmitter it is intended to operate with. The following steps configure the receiver to operate with a particular transmitter or transmitters.

***Momentary or Latching Output:***

The transmitter and receiver can be configured for momentary or latching operation. For momentary operation, the output of the receiver will be active for as long as the transmitter switch is depressed, and will turn off when the switch is released. In the latching configuration, the receiver output will turn on as soon as the transmitter switch is depressed and released. To turn off the latching output, the transmitter switch must be depressed and released
again.

1. Locate the pushbutton switch labeled "PROGRAM" on the receiver. Press and hold this switch until the red LED next to the program switch illuminates (approximately 3 seconds). The receiver is now in the transmitter program mode, release the switch. At this point all previously programmed transmitter addresses are erased from the receiver's memory.
2. For momentary operation, press and release a switch on the transmitter. The red program LED on the receiver will blink once. For latching output, press and release the same switch a second time, the program LED will flash on and off.
3. Repeat previous step for additional transmitters that you desire the receiver to respond to.
4. The receiver will return to normal mode if no transmitter switches are pressed for 5-seconds. The red LED on the receiver will flash and then turn off. The receiver is now in the normal mode of operation. This completes the programming instructions. The receiver will retain all of its programming even when power is removed.

# Maintenance

By following a careful service and maintenance program for your Seed Shuttle, you will enjoy many years of trouble-free service.

## Conveyor Belt Tension

Adjusting your conveyor belt for proper tension helps to ensure trouble-free operation and long belt life. A conveyor belt only needs to be tight enough to eliminate slipping on the drive roller. If the belt is too loose, it will slip on the drive roller making a noticeable sound, with the belt slowing down. To correct belt slippage and set proper tension on the belt, follow the steps below.

1. Clear area of bystanders.
2. Remove ignition key or lockout power source.
3. Loosen bearing bolts and jam nut at tightening roller.
4. Tighten adjustment bolts equally, using a tape measure to verify. The belt should deflect 1”-2” when pushed down with a 5lb force or be difficult to pull from sides of hopper transition. (Some covers may need to be removed for this)
5. Tighten bearing bolts and jam nuts.
6. Check belt tension by running conveyor for one (1) minute. If belt is not slipping, then proceed to next step, otherwise repeat previous steps.
7. If belt is not slipping, but is running to one side, the tensioned roller needs to be realigned. See **Belt Alignment** section to correct this problem.
8. Ensure that all covers and guards are securely in place before operation.

***Helpful Tips:***

- If the belt is slipping and adjustment bolts are fully tightened, the belt must be shortened. **See Belt Lacing and Length Adjustment** section for instructions.
- If Engine V-belt has proper tension, tighten conveyor belt at spout end, not the hopper end of the conveyor.

**WARNING**

**Ensure ignition key is removed or lockout power source before adjusting or servicing conveyor.**

**IMPORTANT**

- Do not operate conveyor if belt is slipping. Stop conveyor and tighten belt before continuing operation. Failure to do so will result in damage to the conveyor belt and may void warranty.

**NOTE**

- Some belts may have uneven edges, appearing to be misaligned. Wait until the belt makes a complete revolution before adjusting roller.

# Maintenance

## Conveyor Belt Alignment

The Seed Shuttle Conveyor belt should be checked weekly to ensure it is properly aligned. If the belt is tracking to one side, use the following steps to correct the problem.

1. Clear area of bystanders.
2. Ensure the conveyor is completely empty of all product.
3. Remove ignition key or lockout power source.
4. Loosen bearing bolts and jam nuts if equipped.
5. Start checking the alignment at the hopper end followed by the discharge end.
6. If belt is not centered, adjust the bearing on the side the belt is moving toward. The bearing should be moved in the direction which would tighten the belt. See Figure 1.
7. 7Start the conveyor and run empty for one (1) minute.
8. Stop conveyor, remove ignition key or lockout power source.
9. If belt is centered continue to the next step, if not repeat alignment process.
10. Tighten bearing bolts and jam nuts if equipped.
11. Replace any covers or guards that may have been removed.

## Belt Lacing and Length Adjustment

1. Rotate the conveyor belt until the lacing is easily accessible.
2. Loosen the conveyor belt and remove lacing retainer clip and pin. See Figure 1.
3. Use a square and sharp knife to cut the belt. If just replacing the lacing cut right behind existing lacing. If shortening the belt, cut off the appropriate amount of belt. **THE BELT ENDS MUST BE CUT SQUARE.**
4. Use a knife to remove the crescent top pattern 1” back from the end of the belt. This ensures that the lacing is centered and fully seated on the belt.
5. Use a lacing tool to install new lacing clips. Lacing clips should be one clip shorter than conveyor belt width. Center lacing on the belt and install the lacing as per instructions on lacing tool.
6. Pull the conveyor belt ends together. If required use a ratchet strap clamped to the belt to pull the ends together.
7. Install the lacing pin and retainer clip on each end of the pin.
8. Remove the ratchet strap if used and tighten the conveyor belt.
9. Follow **Belt Tension** and **Belt Alignment** steps to properly adjust the conveyor belt.
10. Clear area of bystander and run the conveyor for 30 seconds. Shut down the conveyor and inspect the lacing and belt alignment.

# Maintenance

## Conveyor Belt Replacement

1. Rotate the conveyor belt until the lacing is easily accessible.
2. Loosen the conveyor belt and remove lacing retainer clip and pin. See Figure 1.
3. Attach one end of the replacement belt to the belt being removed.
4. Pull the opposite end of the old belt so that the new belt is pulled into and through the conveyor.
5. Disconnect the old belt.
6. Pull the conveyor belt ends together. If required use a ratchet strap clamped to the belt to pull the ends together.
7. Install the lacing pin and retainer clip on each end of the pin.
8. Remove the ratchet strap if used and tighten the conveyor belt.
9. Follow **Belt Tension** and **Belt Alignment** steps to properly adjust the conveyor belt.
10. Clear area of bystander and run the conveyor for 30 seconds. Shut down the conveyor and inspect the lacing and belt alignment.

## Drive Belt Replacement

- Turn Honda Engine off and remove Key.
- To Replace the Belt
  1. Move motor base to completely loosen belt.
  2. Remove the existing belt and replace with the new belt.
  3. Follow belt alignment and tension instructions.
- To Adjust Alignment
  1. Use a straight edge across the pulley faces to check alignment.
  2. Adjust the pulley on the shaft to achieve proper alignment.
  3. Tighten hub bolts or set screws to secure the pulley.
  4. Check the belt tension
- To Tension the Belt
  1. The belt should deflect 1/4” to 1/2” at the center of the span with a 5lb force applied.
  2. Loosen Engine bolts and use the Engine push bolt to properly tension the belt.
  3. Tighten Engine bolts and replace any guards that may have been removed.

***For Honda Engine Maintenance refer to the Honda Owner’s Manual***

# Maintenance

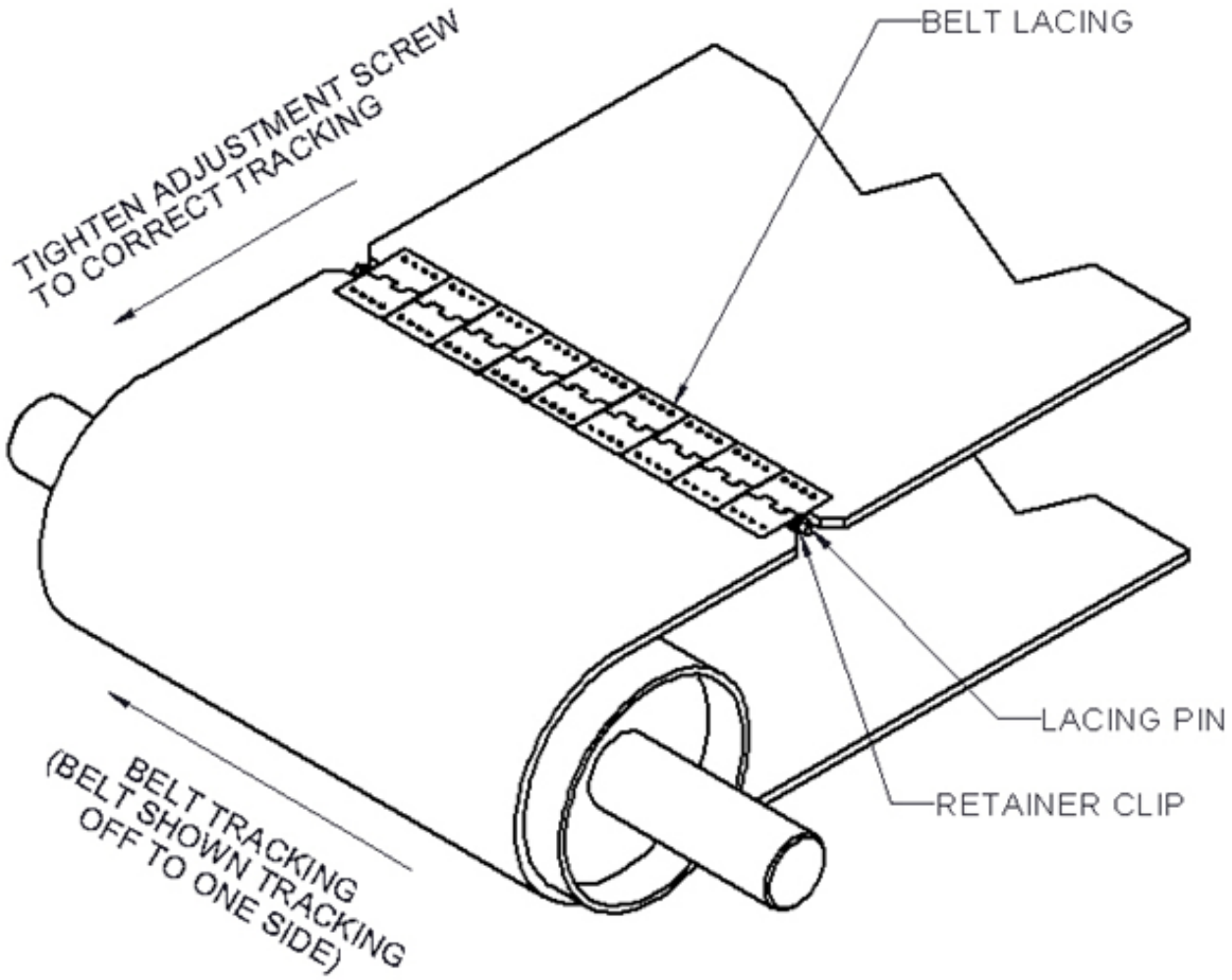


BELT ADJUSMENT FOR PROPER BELT TRACKING

FIGURE 1

## *Brake Adjustment*

Brakes should be adjusted (1) after the first 200 miles of operations when the brake shoes and drums have "seated", (2) at 3000 mile intervals, (3) or as use and performance requires. The brakes should be adjusted as follows, based on type of axle brakes.

**⚠ CAUTION**

Never crawl under your trailer unless it is resting on properly placed jack stands. Do not lift or place supports on any part of the suspension system.

# Maintenance

- **Manually Adjusted Brakes**
  1. Jack up trailer and secure using adequate capacity jack stands. Check that the wheel and drum rotate freely.
  2. Remove the adjusting hole cover from the adjusting slot on the bottom of the brake backing plate.
  3. Using an adjusting tool or standard screwdriver, rotate the star wheel until there is a heavy brake drag.
  4. Loosen the star wheel until the wheel turns freely about 3/4 to one full turn.
  5. Replace the adjusting hole cover and lower the wheel to the ground. Repeat the above procedure on all brakes.

- **Self Adjusting Brakes**
  1. Self Adjusting Brakes are automatically adjusted during hard reverse stops.
  2. When the leading shoe leaves the anchor pin, the adjuster cable pulls the adjuster pawl upward to engage the next tooth of the adjuster star wheel if adjustment is necessary due to normal wear.
  3. To release the shoes, the adjuster pawl must be pulled away before the star wheel can be turned backward to decrease brake adjustment.

## *Brake Inspection*

Your brakes must be inspected and serviced at yearly intervals or more often as use and performance requires. Magnets and shoes must be changed when they become worn or scored, thereby preventing adequate vehicle braking.

Clean the backing plate, magnet arm, magnet and brake shoes.

Make certain that all removed parts are replaced in the same brake and drum assembly. Inspect the magnet arm for any loose or worn parts. Check shoe return springs, hold down springs and adjuster springs for stretch or deformation and replace if required.

**CAUTION**

### *Asbestos Dust Hazard!*

Since some brake shoe friction materials contain asbestos, precautions need to be taken when servicing brakes.

- Avoid creating or breathing dust.
- Avoid machining, filing, or grinding the brake linings.
- Do not use compressed air or dry brushing for cleaning. (Dust can be removed with a damp brush.)

# Trouble Shooting

The Seed Shuttle uses pattern topped conveyor belt moving through a tube to convey material from one location to another. It is a simple and reliable system that requires minimal maintenance.

In the following section, we have listed many of the typical problems, causes and solutions to possible problems you may encounter.

If you encounter a problem that is difficult to solve, even after having read through this troubleshooting section, please call your local Norwood Sales dealer or distributor. Before you call, please have this Operator's Manual and the serial number from your machine ready.

## Conveyor Belt

| Problem | Cause | Solution |
|---|---|---|
| Belt Slipping | Conveyor belt is loose | Tighten and align belt (Fig. 1) |
| | Drive roller lagging worn or damaged | Replace drive roller lagging |
| | Drive belt loose | Tighten and align |
| | Belt frozen to tube from operating in high humidity and cold temperatures | Remove conveyor from area of high humidity and warm belt to de-ice |
| Excessive belt edge fraying | Belt not in alignment | Align and tension belt |
| Belt loose | Belt stretches over time…also can be caused by oily grain products | Re-tension belt<br>If tightener is fully engaged, you may need to shorten belt |

**CAUTION** ***Do not over tighten belt, doing so may cause bearing and belt damage.***

## Hopper

| Problem | Cause | Solution |
|---|---|---|
| Grain leaking from conveyor hopper | Belt not tracked properly | Track conveyor belt (Fig. 1) |
| | Flashing worn or installed incorrectly | Inspect flashing for wear and replace if required |

## Drive

| Problem | Cause | Solution |
|---|---|---|
| Drive making noise | Slipping belt | See belt slipping |
| | Hot shaft, pulley or bearing | Overheated components indicate a failed bearing that must be repaired |
| | Broken drive roller | Replace damaged component |

# Trouble Shooting

## Spout

| Problem | Cause | Solution |
|---|---|---|
| Grain leaking from conveyor spout between belt & tube | Belt not tracked properly | Track conveyor belt (Fig. 1) |
| Grain leaking from conveyor spout between hood & belt | Belt is running too fast (hood plugging) | Decrease belt speed or feed rate |
| Grain following belt around to return side | Wet product, possibly from inoculation | Allow product to dry before conveying |

## Transmitter & Receiver

If you are encountering problems with the control system on your Seed Shuttle, this guide will take you through basic trouble shooting.

If the system simply ***"will not work"*** in wireless or manual mode, begin by checking battery voltage. On electric start applications, if the engine cranks normally, battery voltage can be considered good. If the engine does not crank normally, check batter voltage. On manual start models, begin by checking battery voltage. ***Battery voltage must be between 10 & 12 Volts DC. Battery connections must also be clean and tight.*** Also check the tension on the VTC cable, which is attached to the throttle lever on the engine. This cable must move freely and must not be over-tightened.

The control system is fused and requires a 2 or 3 AMP ATO automotive style fuse. If you cannot determine that the fuse is good or bad visually check with a meter or test light. ***Replace fuse if it's bad.***

## Wireless Control System

The wireless portion of the control system is switched to isolate it from the battery, preventing battery run-down and isolating it from the system when starting. The wireless control should be switched off when the system is not in use or when starting the engine.

To test for current to the wireless control, first check for voltage going in to the function selector switch on the white wire coming from the battery. If there is power coming in, select wireless and check for voltage on the white wire coming out. If voltage is present on both sides when the wireless function is selected, power should be present at the wireless controller. When power is present and the handheld transmitter is working properly, a function light will be visible when cover is removed. Contact your Seed Shuttle dealer if you are unsure of the wireless controller operation. If the function light is present, output voltage from the wireless controller can be checked at the VTC connector, the black and white wires. Check for voltage by actuating the wireless controller with the hand held transmitter. +12VDC should be present on alternating wires, depending on user input of the throttle up or throttle down. The VTC utilizes reversing polarity for orientation, so these wires will change polarity when the manual switch is activated.

The hand held transmitter for your control system utilizes a A23 battery. Refer to the user guide for proper battery replacement to insure the water and dust resistant integrity of the transmitter. There are no other user serviceable parts in the transmitter.

# Trouble Shooting

## Manual Control System

The manual portion of the system utilizes a self centering toggle switch to activate the VTC (throttle motor).

To test for voltage at the manual control switch check the yellow power wire going in. If voltage is present, the switch can be checked for integrity by selecting manual on the selector switch, moving the bat handle of the throttle switch and again checking for voltage on the black and white wires. When actuating the switch. +12VDC should be present on alternating wires, depending on user input of throttle up or throttle down. The VTC utilizes reversing polarity for orientation, so these wires will change polarity when the manual switch is activated.

## VTC

The VTC is a right angle drive DC gear motor that utilizes reversing polarity for orientation. This is a very small motor, so it is important that the throttle control cable move freely without binding. The motor can be moved manually if care is exercised, to check cable movement. Simply apply finger pressure only (no tools) on the motor arm in line with the cable attachment. The motor will provide some resistance, but you will be able to determine if the cable is binding. Motor arm breakage in not covered by warranty.

# Swing Hydraulic Diagram

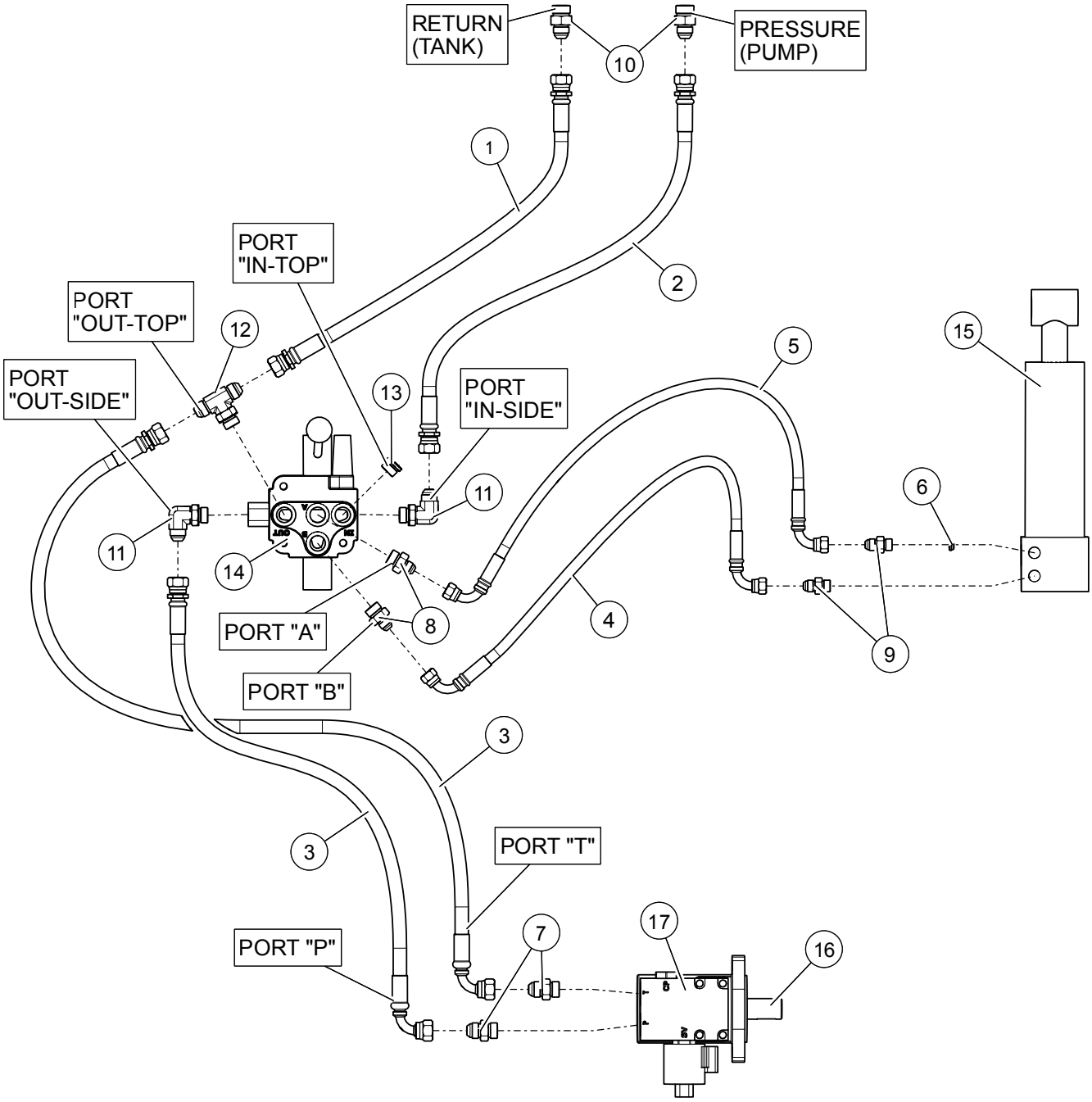

# Swing Hydraulic Diagram

| Item No. | Part No. | Description | Qty. |
|---|---|---|---|
| 1 | 90-37-1055 | Hose, 06 x 163”, 08 FJX x 08 FJX | 1 |
| 2 | 90-37-1056 | Hose, 06 x 141”, 08 FJX x 08 FJX | 1 |
| 3 | 90-37-1053 | Hose, 06 x 200”, 08 FJX x 08 FJX90 | 2 |
| 4 | 90-37-1054 | Hose, 04 x 51”, 06 FJX90 x 06 FJX90 | 1 |
| 5 | 90-37-1069 | Hose, 04 x 53”, 06 FJX90 x 06 FJX90 | 1 |
| 6 | 90-36-0017 | Orifice Disc, 06 MO Port 0.022 Hole | 1 |
| 7 | 90-38-0018 | Adapter, Straight, 08 MO x 08 MJ | 2 |
| 8 | 90-38-0022 | Adapter, Straight, 08 MO x 06 MJ | 2 |
| 9 | 90-38-0043 | Adapter, Straight, 06 MJ x 06 MO | 2 |
| 10 | 90-38-0093 | Adapter, Straight 08 MJ x 10 MO | 2 |
| 11 | 90-38-0019 | Adapter, 90° Elbow, 08 MO x 08 MJ | 2 |
| 12 | 90-38-0020 | Adapter, Tee, 08 MJ x 08 MJ x 08 MO | 1 |
| 13 | 90-38-0094 | Adapter, Plug, 8 MO (Hollow) | 1 |
| 14 | 90-36-0001 | Valve, MonoBlock | 1 |
| 15 | 90-39-0005 | Cylinder, 2.5” Bore x 4” Stroke w/ Check Valve | 1 |
| 16 | 90-35-0003 | Motor, Hyd H-Series | 1 |
| 17 | 90-36-0016 | Valve, 12V DC Manifold Mount Hydraulic | 1 |
| - | 90-37-0013 | Hose Kit, Seed Shuttle Swing<br>Includes : #1 - #5 | - |
| - | 40-2-00091 | Hydraulic Kit, Seed Shuttle Swing Conveyor<br>Includes : #1 - #13 | - |

# 7-Function Hydraulic Diagram

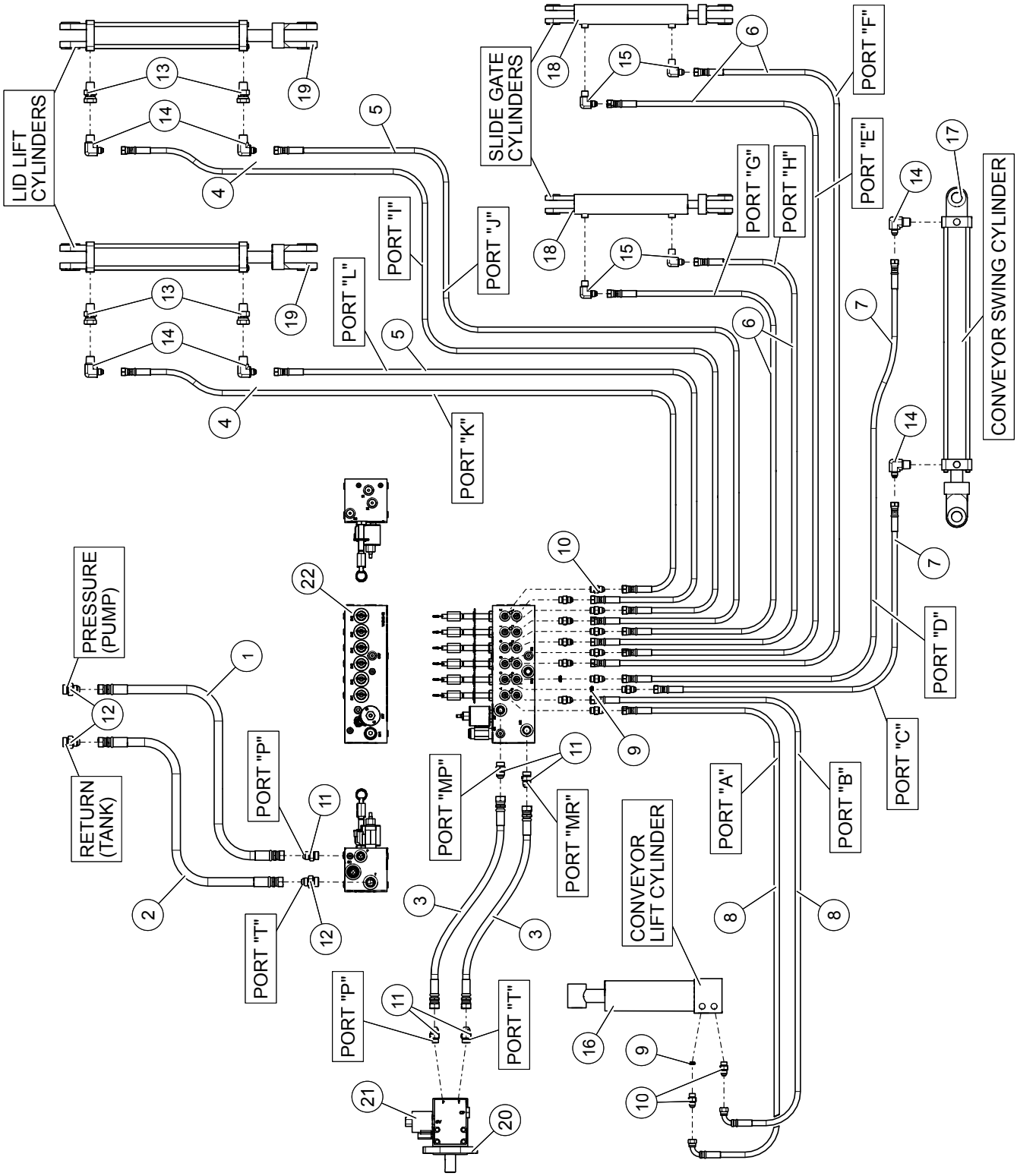

# 7-Function Hydraulic Diagram

| Item No. | Part No. | Description | Qty. |
|---|---|---|---|
| 1 | 90-37-1052 | Hose, 08 x 27”, 08 FJX x 08 FJX | 1 |
| 2 | 90-37-1051 | Hose, 08 x 47”, 08 FJX x 08 FJX | 1 |
| 3 | 90-37-1013 | Hose, 06 x 360”, 08 FJX x 08 FJX | 2 |
| 4 | 90-37-1009 | Hose, 04 x 216”, 06 FJX x 06 FJX | 2 |
| 5 | 90-37-1010 | Hose, 04 x 230”, 06 FJX x 06 FJX | 2 |
| 6 | 90-37-1011 | Hose, 04 x 44”, 06 FJX x 06 FJX | 4 |
| 7 | 90-37-1012 | Hose, 04 x 28”, 06 FJX x 06 FJX | 2 |
| 8 | 90-37-1014 | Hose, 04 x 114”, 06 FJX x 06 FJX90 | 2 |
| 9 | 90-36-0017 | Orifice Disc, 06 MO Port 0.022 Hole | 3 |
| 10 | 90-38-0043 | Adapter, Straight, 06 MJ x 06 MO | 14 |
| 11 | 90-38-0018 | Adapter, Straight, 08 MO x 08 MJ | 5 |
| 12 | 90-38-0093 | Adapter, Straight 08 MJ x 10 MO | 3 |
| 13 | 90-38-0096 | Adapter, Restrictor, 08 MP x 08 FPX (0.022 Hole) | 4 |
| 14 | 90-38-0095 | Adapter, 90° Elbow, 08 MP x 06 MJ | 6 |
| 15 | 90-38-0044 | Adapter, 90° Elbow, 06 MP x 06 MJ | 4 |
| 16 | 90-39-0005 | Cylinder, 2.5” Bore x 4” Stroke w/ Check Valve | 1 |
| 17 | 90-39-0006 | Cylinder, 2.0” Bore x 20” Stroke | 1 |
| 18 | 90-39-0002 | Cylinder, 1.5” Bore x 8” Stroke | 2 |
| 19 | 90-39-0008 | Cylinder, 2.0” Bore x 12” Stroke | 2 |
| 20 | 90-35-0003 | Motor, Hyd H-Series | 1 |
| 21 | 90-36-0016 | Valve, 12V DC Manifold Mount Hydraulic | 1 |
| 22 | 90-36-0010 | Valve, 7 Function Seed Shuttle | 1 |
| - | 90-37-0005 | Hose Kit, Seed Shuttle 7-Function<br>Includes : #1 - #8 | - |
| - | 40-2-00092 | Hydraulic Kit, Seed Shuttle 7-Function<br>Includes : #1 - #15 | - |

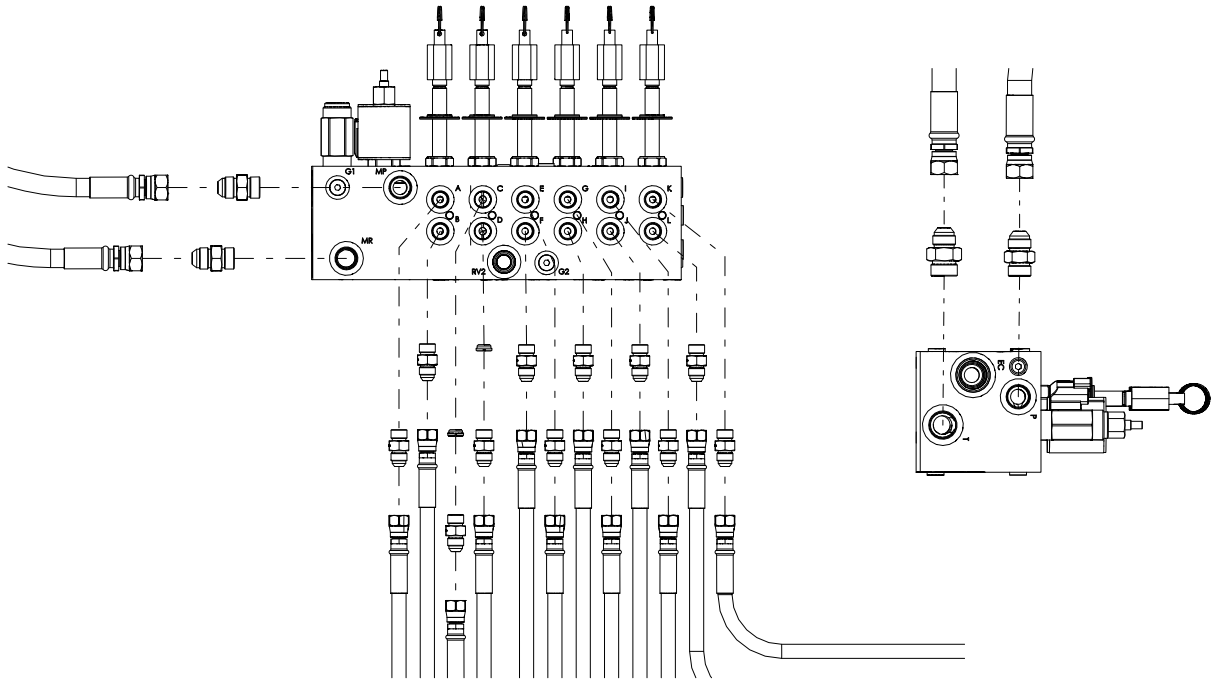

# Wire Schematics

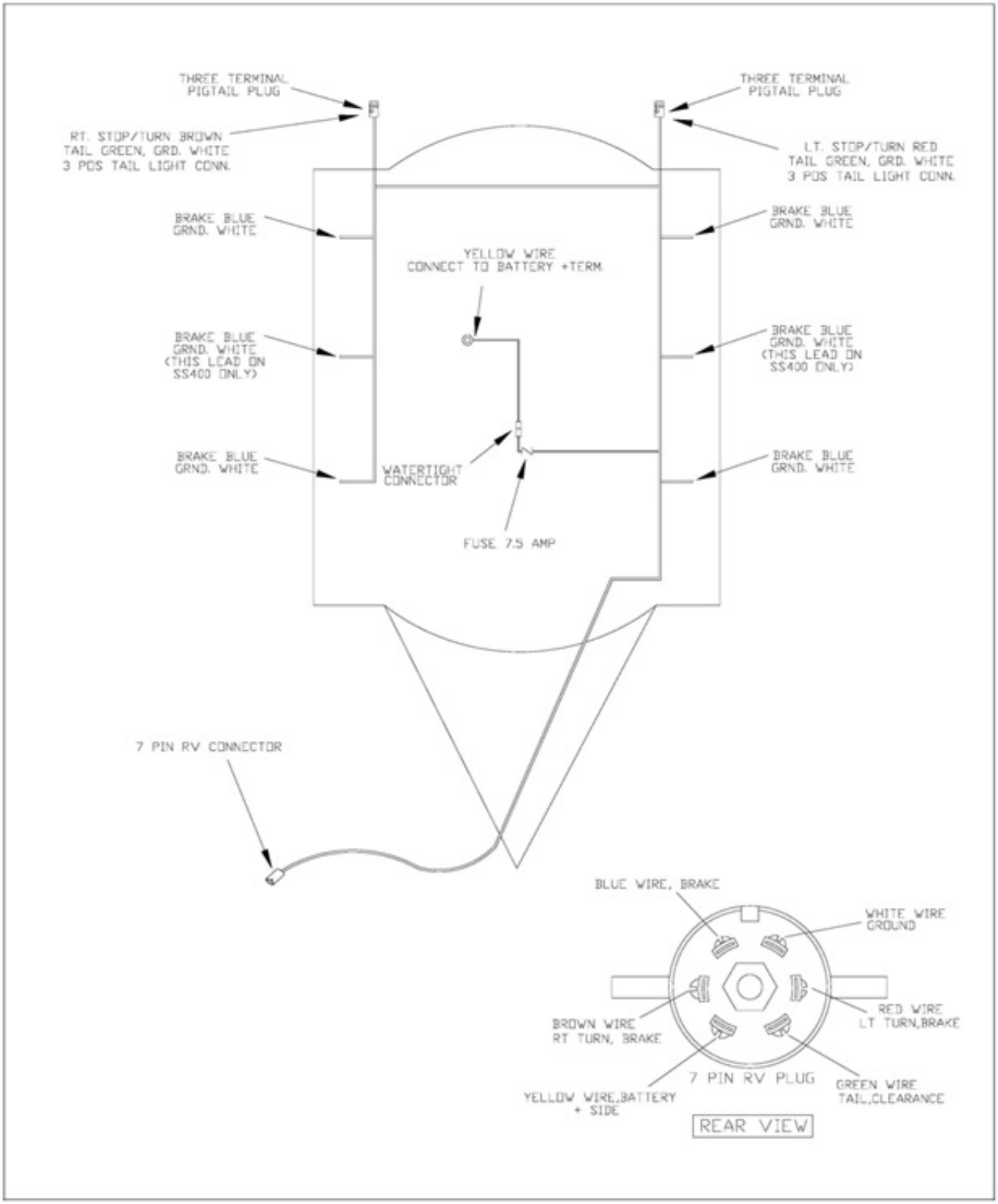


***Trailer Wire Schematic***

# Warranty

## Warranty Registration

Customer's Name _____

Address _____

City _____ State _____ Area Code _____

Phone Number _____

Model _____

Delivery Date _____

Dealer's Name _____

Address _____

City _____ State _____ Area Code _____

Phone Number _____

Serial Number _____

Check One Below:

Commercial Use _____ Farm Use _____

## Dealer Inspection Report

_____ Wheel Nuts Tight
_____ Tire Pressure
_____ Drives Aligned and Tensioned
_____ Drive System Rotates Freely
_____ Fasteners Tight
_____ Gas Engine Serviced
_____ Wireless Transmitter & Receiver
_____ All Decals Installed
_____ Signal Lights Work Properly
_____ Guards and Shield Installed
_____ Safety Chain Installed
_____ Review Operating & Safety Instructions
_____ Operator Manual Supplied

I have thoroughly instructed the buyer on the above described equipment including a review of the Operator's Manual content, equipment care, adjustments, safe operation and applicable warranty policy.

Date _____ Dealer's Signature _____

I have received the above equipment and Operator's Manual and I have been thoroughly instructed on its care, adjustments, safe operation and applicable warranty policy.

Date _____ Owner's Signature _____

# Warranty

## Limited Warranty Policy

**Norwood Sales Inc.** warrants to the buyer that the new machinery is free from defects in material and workmanship.

This warrant is only effective on new machinery, which has not been altered, changed or repaired since its delivery to the buyer.

**Norwood Sales Inc.** shall only be liable for defects in materials or workmanship and specifically excludes liability for repairs arising as a result of normal wear and tear of the new machinery and without limiting the generality of the foregoing, excludes application or installation of parts not completed in accordance with **Norwood Sales Inc.** operator's manual, specifications, or printed instructions.

Written notice shall be given by registered mail, to **Norwood Sales Inc.** within seven (7) days after the defect shall have become apparent or the repairs shall have become necessary, addressed as follows: **Norwood Sales Inc., 11202 38th Street South, Horace, ND 58047.**

This warranty shall expire one (1) year after the date of delivery of the new machinery.

If these conditions are fulfilled, **Norwood Sales Inc.** at its option will either repair or replace any defect. The buyer shall be responsible for all expenses incurred as a result of repairs, labor, parts, transportation or any other work, unless **Norwood Sales Inc.** authorizes such expenses in advance.

The warranty shall not extend to any repairs, changes, alterations, or replacements made to the new equipment other than by **Norwood Sales Inc.** or its authorized dealers.

This warranty extends only to the original owner of the new equipment.

This warranty is limited to the terms stated herein and is in lieu of any other warranties whether expressed or implied, and without limiting the generality of the foregoing, excluded all warranties, expressed or implied or conditions whether statutory or otherwise as to quality and fitness for any purpose of the new equipment. **Norwood Sales Inc.** disclaims all liability for incidental or consequential damages.

This machine is subject to design changes and **Norwood Sales Inc.** shall not be required to retro-fit or exchange items on previously sold units except at its own option.

NORWOOD
Sales Inc.


| | | |
|---|---|---|
| Norwood Sales Inc. | Toll Free: | 800-466-0316 |
| www.norwoodsales.com | Local/Intl: | Fax: |
| Cooperstown, ND | 701-797-3684 | 701-797-3685 |
| Horace, ND | 701-588-4000 | 701-588-4004 |
| Union, NE | 402-263-2100 | 402-263-2104 |

JS 44 (Rev. 06/17)

# CIVIL COVER SHEET

The JS 44 civil cover sheet and the information contained herein neither replace nor supplement the filing and service of pleadings or other papers as required by law, except as provided by local rules of court. This form, approved by the Judicial Conference of the United States in September 1974, is required for the use of the Clerk of Court for the purpose of initiating the civil docket sheet. *(SEE INSTRUCTIONS ON NEXT PAGE OF THIS FORM.)*

**I. (a) PLAINTIFFS**

Unverferth Mfg. Co., Inc.

**(b)** County of Residence of First Listed Plaintiff Putnam County, Ohio
*(EXCEPT IN U.S. PLAINTIFF CASES)*

**(c)** Attorneys *(Firm Name, Address, and Telephone Number)*
William P. Harrie, Nilles Law Firm, 1800 Radisson Tower, 201 North Fifth Street, P.O. Box 2626, Fargo, North Dakota 58108; Joseph A. Hynds, Brett A. Postal, Rothwell Figg Ernst & Manbeck, P.C. (202-783-6040)

**DEFENDANTS**

Norwood Sales Inc.

County of Residence of First Listed Defendant Cass County, North Dakota
*(IN U.S. PLAINTIFF CASES ONLY)*

NOTE: IN LAND CONDEMNATION CASES, USE THE LOCATION OF THE TRACT OF LAND INVOLVED.

Attorneys *(If Known)*

**II. BASIS OF JURISDICTION** *(Place an "X" in One Box Only)*

- ☐ 1 U.S. Government Plaintiff
- ☒ 3 Federal Question *(U.S. Government Not a Party)*
- ☐ 2 U.S. Government Defendant
- ☐ 4 Diversity *(Indicate Citizenship of Parties in Item III)*

**III. CITIZENSHIP OF PRINCIPAL PARTIES** *(Place an "X" in One Box for Plaintiff and One Box for Defendant)* *(For Diversity Cases Only)*

| | PTF | DEF | | PTF | DEF |
|---|---|---|---|---|---|
| Citizen of This State | ☐ 1 | ☐ 1 | Incorporated *or* Principal Place of Business In This State | ☐ 4 | ☐ 4 |
| Citizen of Another State | ☐ 2 | ☐ 2 | Incorporated *and* Principal Place of Business In Another State | ☐ 5 | ☐ 5 |
| Citizen or Subject of a Foreign Country | ☐ 3 | ☐ 3 | Foreign Nation | ☐ 6 | ☐ 6 |

**IV. NATURE OF SUIT** *(Place an "X" in One Box Only)* Click here for: Nature of Suit Code Descriptions.

**CONTRACT**
- ☐ 110 Insurance
- ☐ 120 Marine
- ☐ 130 Miller Act
- ☐ 140 Negotiable Instrument
- ☐ 150 Recovery of Overpayment & Enforcement of Judgment
- ☐ 151 Medicare Act
- ☐ 152 Recovery of Defaulted Student Loans (Excludes Veterans)
- ☐ 153 Recovery of Overpayment of Veteran's Benefits
- ☐ 160 Stockholders' Suits
- ☐ 190 Other Contract
- ☐ 195 Contract Product Liability
- ☐ 196 Franchise

**REAL PROPERTY**
- ☐ 210 Land Condemnation
- ☐ 220 Foreclosure
- ☐ 230 Rent Lease & Ejectment
- ☐ 240 Torts to Land
- ☐ 245 Tort Product Liability
- ☐ 290 All Other Real Property

**TORTS**

**PERSONAL INJURY**
- ☐ 310 Airplane
- ☐ 315 Airplane Product Liability
- ☐ 320 Assault, Libel & Slander
- ☐ 330 Federal Employers' Liability
- ☐ 340 Marine
- ☐ 345 Marine Product Liability
- ☐ 350 Motor Vehicle
- ☐ 355 Motor Vehicle Product Liability
- ☐ 360 Other Personal Injury
- ☐ 362 Personal Injury - Medical Malpractice

**PERSONAL INJURY**
- ☐ 365 Personal Injury - Product Liability
- ☐ 367 Health Care/ Pharmaceutical Personal Injury Product Liability
- ☐ 368 Asbestos Personal Injury Product Liability

**PERSONAL PROPERTY**
- ☐ 370 Other Fraud
- ☐ 371 Truth in Lending
- ☐ 380 Other Personal Property Damage
- ☐ 385 Property Damage Product Liability

**CIVIL RIGHTS**
- ☐ 440 Other Civil Rights
- ☐ 441 Voting
- ☐ 442 Employment
- ☐ 443 Housing/ Accommodations
- ☐ 445 Amer. w/Disabilities - Employment
- ☐ 446 Amer. w/Disabilities - Other
- ☐ 448 Education

**PRISONER PETITIONS**

**Habeas Corpus:**
- ☐ 463 Alien Detainee
- ☐ 510 Motions to Vacate Sentence
- ☐ 530 General
- ☐ 535 Death Penalty

**Other:**
- ☐ 540 Mandamus & Other
- ☐ 550 Civil Rights
- ☐ 555 Prison Condition
- ☐ 560 Civil Detainee - Conditions of Confinement

**FORFEITURE/PENALTY**
- ☐ 625 Drug Related Seizure of Property 21 USC 881
- ☐ 690 Other

**LABOR**
- ☐ 710 Fair Labor Standards Act
- ☐ 720 Labor/Management Relations
- ☐ 740 Railway Labor Act
- ☐ 751 Family and Medical Leave Act
- ☐ 790 Other Labor Litigation
- ☐ 791 Employee Retirement Income Security Act

**IMMIGRATION**
- ☐ 462 Naturalization Application
- ☐ 465 Other Immigration Actions

**BANKRUPTCY**
- ☐ 422 Appeal 28 USC 158
- ☐ 423 Withdrawal 28 USC 157

**PROPERTY RIGHTS**
- ☐ 820 Copyrights
- ☒ 830 Patent
- ☐ 835 Patent - Abbreviated New Drug Application
- ☐ 840 Trademark

**SOCIAL SECURITY**
- ☐ 861 HIA (1395ff)
- ☐ 862 Black Lung (923)
- ☐ 863 DIWC/DIWW (405(g))
- ☐ 864 SSID Title XVI
- ☐ 865 RSI (405(g))

**FEDERAL TAX SUITS**
- ☐ 870 Taxes (U.S. Plaintiff or Defendant)
- ☐ 871 IRS—Third Party 26 USC 7609

**OTHER STATUTES**
- ☐ 375 False Claims Act
- ☐ 376 Qui Tam (31 USC 3729(a))
- ☐ 400 State Reapportionment
- ☐ 410 Antitrust
- ☐ 430 Banks and Banking
- ☐ 450 Commerce
- ☐ 460 Deportation
- ☐ 470 Racketeer Influenced and Corrupt Organizations
- ☐ 480 Consumer Credit
- ☐ 490 Cable/Sat TV
- ☐ 850 Securities/Commodities/ Exchange
- ☐ 890 Other Statutory Actions
- ☐ 891 Agricultural Acts
- ☐ 893 Environmental Matters
- ☐ 895 Freedom of Information Act
- ☐ 896 Arbitration
- ☐ 899 Administrative Procedure Act/Review or Appeal of Agency Decision
- ☐ 950 Constitutionality of State Statutes

**V. ORIGIN** *(Place an "X" in One Box Only)*

- ☐ 1 Original Proceeding
- ☐ 2 Removed from State Court
- ☐ 3 Remanded from Appellate Court
- ☐ 4 Reinstated or Reopened
- ☐ 5 Transferred from Another District *(specify)*
- ☐ 6 Multidistrict Litigation - Transfer
- ☐ 8 Multidistrict Litigation - Direct File

**VI. CAUSE OF ACTION**

Cite the U.S. Civil Statute under which you are filing *(Do not cite jurisdictional statutes unless diversity)*:
35 U.S.C. 1, et seq.

Brief description of cause:
Patent Infringement

**VII. REQUESTED IN COMPLAINT:** ☐ CHECK IF THIS IS A **CLASS ACTION** UNDER RULE 23, F.R.Cv.P. **DEMAND $** CHECK YES only if demanded in complaint: **JURY DEMAND:** ☒ Yes ☐ No

**VIII. RELATED CASE(S) IF ANY** *(See instructions)*: JUDGE _____ DOCKET NUMBER _____

DATE 03/12/18 SIGNATURE OF ATTORNEY OF RECORD

FOR OFFICE USE ONLY

RECEIPT # _____ AMOUNT _____ APPLYING IFP _____ JUDGE _____ MAG. JUDGE _____