Model 375ST SpeedTender™ Seed Delivery System

375 Unit Tank Capacity

8” Belt Conveyor or 8” Poly-Cup Plastic Auger Unloading System

FEATURES

- Dual Compartments
- Lower Overall Tank Height (9’-9 1/2”) for easier filling and greater stability during transport
- 3-Axle Undercarriage with Electric Brakes on ALL Axles
- Easy Glide™ Axle System
- High Reach 20’ Auger / 21’ Conveyor
- Larger Opening to Fill Corners of Tank
- Easy Access to Standard Electric Start 11 H.P. Honda® Engine
- Heavier Rated Ball Hitch Connector
- Roll Tarp Protects Valuable Contents
- Choice of Red, Green, Blue or Beige Exterior Finish
- Unloads up to 30 Bushels/Minute
- 11' Telescoping Spout

- Electronic scale system mounted between tank and chassis for accurate and complete unloading.

J. & M. Manufacturing Co., Inc. - Fort Recovery, Ohio, U.S.A.
www.jm-inc.com e-mail: sales@jm-inc.com telephone: 1.419.375.2376

Unverferth Exhibit 2012
Par-Kan v. Unverferth
IPR2024-01427

Model 375ST SpeedTender™ Seed Delivery System

If you could sit down at the drawing board and design the perfect Seed Delivery system, what are the features you would want to have?

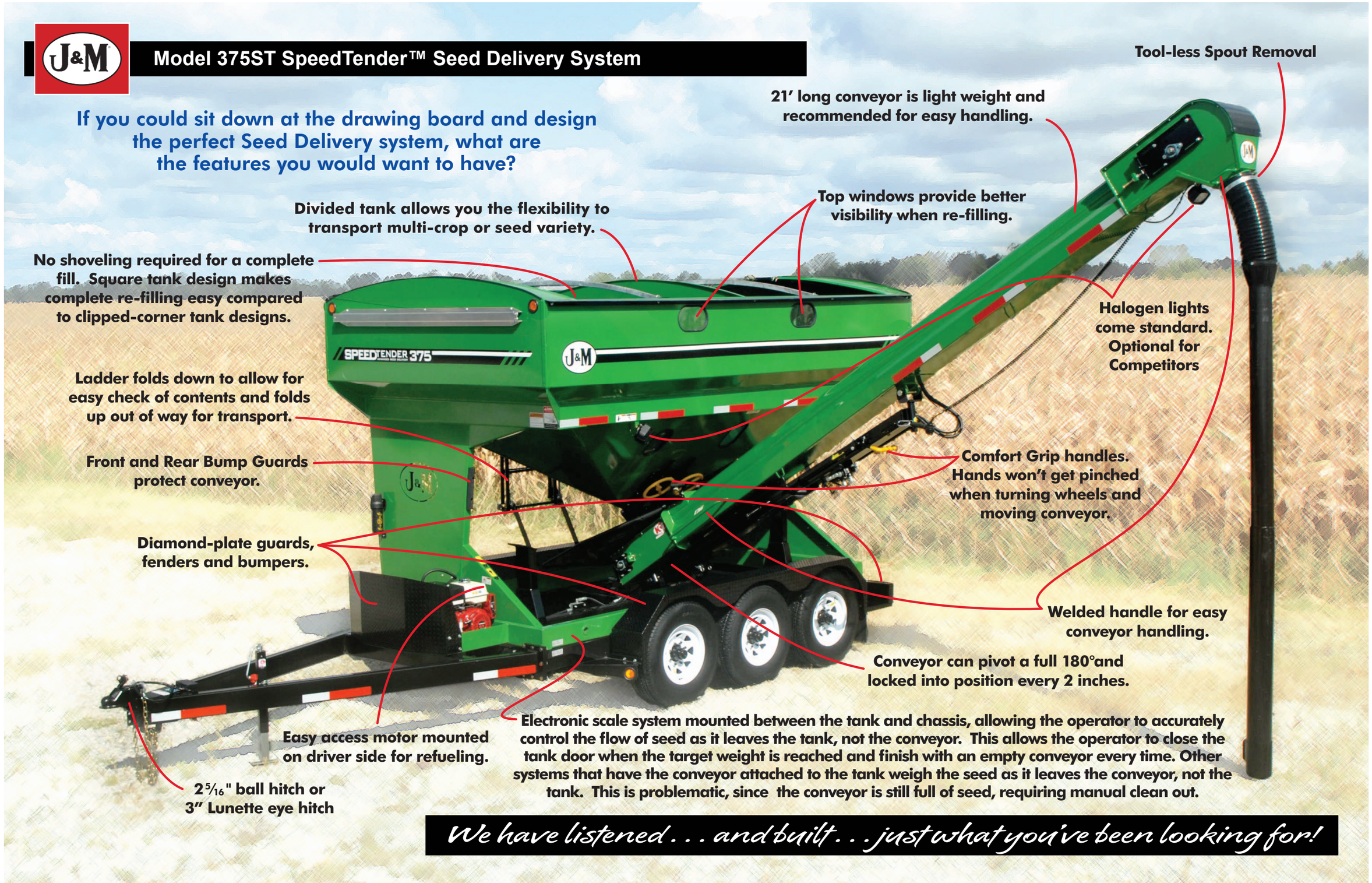

We have listened . . . and built . . . just what you've been looking for!

Model 375ST SpeedTender™ Seed Delivery System

375 Unit Tank Capacity

8” Belt Conveyor or 8” Poly-Cup Plastic Auger Unloading System

DIMENSIONS

	Model 375ST8AU (with 8” poly-cup auger)	Model 375ST8BC (with 8” tube conveyor)
A	2’-4 3/4"	1’-10 1/4"
B	1’-5 5/8” (min.) 1’-9 5/8” (max.)	1’-5 5/8” (min.) 1’-9 5/8” (max.)
C	22’-3”	22’-3"
D	9’-11 1/2" (top of box) 9’-9 1/2” (top of box w/o scales)	9’-11 1/2" (top of box) 9’-9 1/2” (top of box w/o scales)
E	3’-3”	3’-3”
F	15’-10"	15’-10”
G	8’-6”	8’-6”
H	14’-8 1/4" (max.) 6’-10” (min.)	14’-8” (max.) 6’-8” (min.)
I	14’-10 1/4" (max.) 10’-10” (min.)	14’-7” (max.) 10’-2" (min.)
J	10’-7” (Overall Height) 10’-4 1/2” (Overall Height w/o scales)	10’-7” (Overall Height) 10’-4 1/2” (Overall Height w/o scales)

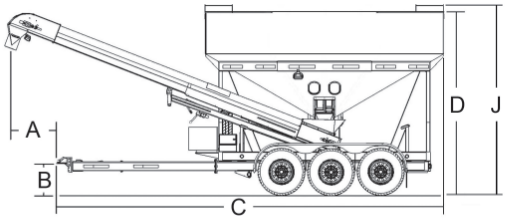

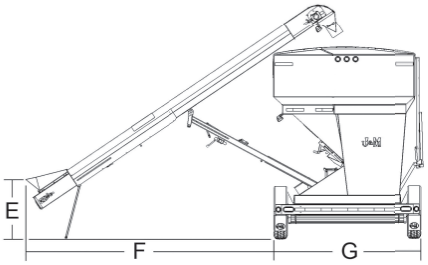

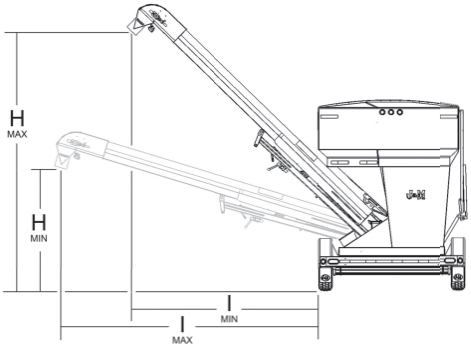

* Auger is recommended for Tall Bulk Fill Planters
* Specifications are subject to change without notice or obligation.

PRODUCT FEATURES

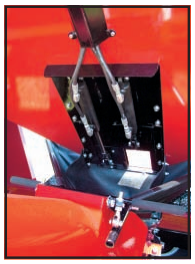

SPT-AF1 Deluxe All Function Control hydraulically opens/closes the tank doors, raises/lowers the conv./auger and starts/stops the auger or conveyor.

Optional wireless remote

Auger/Conveyor base pivots a full 180 degrees and can be locked into position in 2” increments. Optional cover shown below.

Driver side mounted 11 HP Honda Electric Start Engine.

375STWS Scale System with 640XL Indicator.

Ladder folds down to easily check contents, then stores up and out of the way for transport.

J. & M. Manufacturing Co., Inc. - Fort Recovery, Ohio, U.S.A.
www.jm-inc.com e-mail: sales@jm-inc.com telephone: 1.419.375.2376