US005520495A

United States Patent [19]

Sukup

[11] **Patent Number: 5,520,495**

[45] **Date of Patent: May 28, 1996**

[54] **METHOD AND MEANS FOR FILLING FIELD PLANTERS FROM BULK SEED CONTAINERS**

[75] Inventor: **Eugene G. Sukup**, Sheffield, Iowa

[73] Assignee: **Sukup Manufacturing Company**, Sheffield, Iowa

[21] Appl. No.: **205,883**

[22] Filed: **Mar. 3, 1994**

[51] **Int. Cl.**[6] **B65G 67/24**

[52] **U.S. Cl.** **414/523**; 414/504

[58] **Field of Search** 414/403, 414, 414/501, 503, 504, 505, 523, 526; 212/224, 238

[56] **References Cited**

U.S. PATENT DOCUMENTS

2,293,486	8/1942	Barrett	414/523
2,452,267	10/1948	Schramm .	
2,540,100	2/1951	Coeur .	
2,589,988	3/1952	Bruno .	
2,703,554	3/1955	Haggard et al. .	
2,758,732	8/1956	Herzog et al.	414/504
2,994,446	8/1961	Van Auwelaer et al.	212/238
3,091,476	5/1963	Blake .	
3,432,053	3/1969	Vereschagin	414/523
3,467,265	9/1969	Miskin et al.	414/523
3,536,339	10/1970	Fichtenberg .	
3,642,155	2/1972	Carlson	414/504
4,178,123	12/1979	Loeffler	414/523
4,571,143	2/1986	Hellerich	414/523
5,108,249	4/1992	Kinzenbaw et al. .	
5,257,893	11/1993	Sevits	414/523

FOREIGN PATENT DOCUMENTS

917755	4/1982	U.S.S.R.	414/503

Primary Examiner—David A. Bucci
Assistant Examiner—Thomas J. Brahan
Attorney, Agent, or Firm—Zarley, McKee, Thomte, Voorhees, & Sease

[57] **ABSTRACT**

The method of this invention comprises the loading of a rectangular bulk seed container onto a transport vehicle; moving the vehicle to a field location adjacent a field planter; opening the seed container so that the bulk seed will flow by gravity into an elongated conveyer means on the vehicle; moving the conveyer with respect to the vehicle so that the conveyer can discharge seed into a plurality of hoppers on the field planter; and operating the conveyer so that the seed will flow continuously from the container through the conveyer and into the hoppers. The apparatus of this invention comprises a vehicle frame having a lower horizontal seed container support platform and a substantially vertical side frame extending upwardly from the support platform. An inclined auger conveyer is swingably secured to the side frame and is movable from a travel position adjacent the side frame to an angular unloading position with respect to the side frame. The conveyer has a lower inlet end and an upper discharge end,, A track is mounted on the side frame and is connected to the conveyer to permit the conveyer to be moved longitudinally with respect to the side frame. A power means on the vehicle frame is connected to the conveyer for operating the conveyer and for moving the conveyer with respect to the side frame.

10 Claims, 2 Drawing Sheets

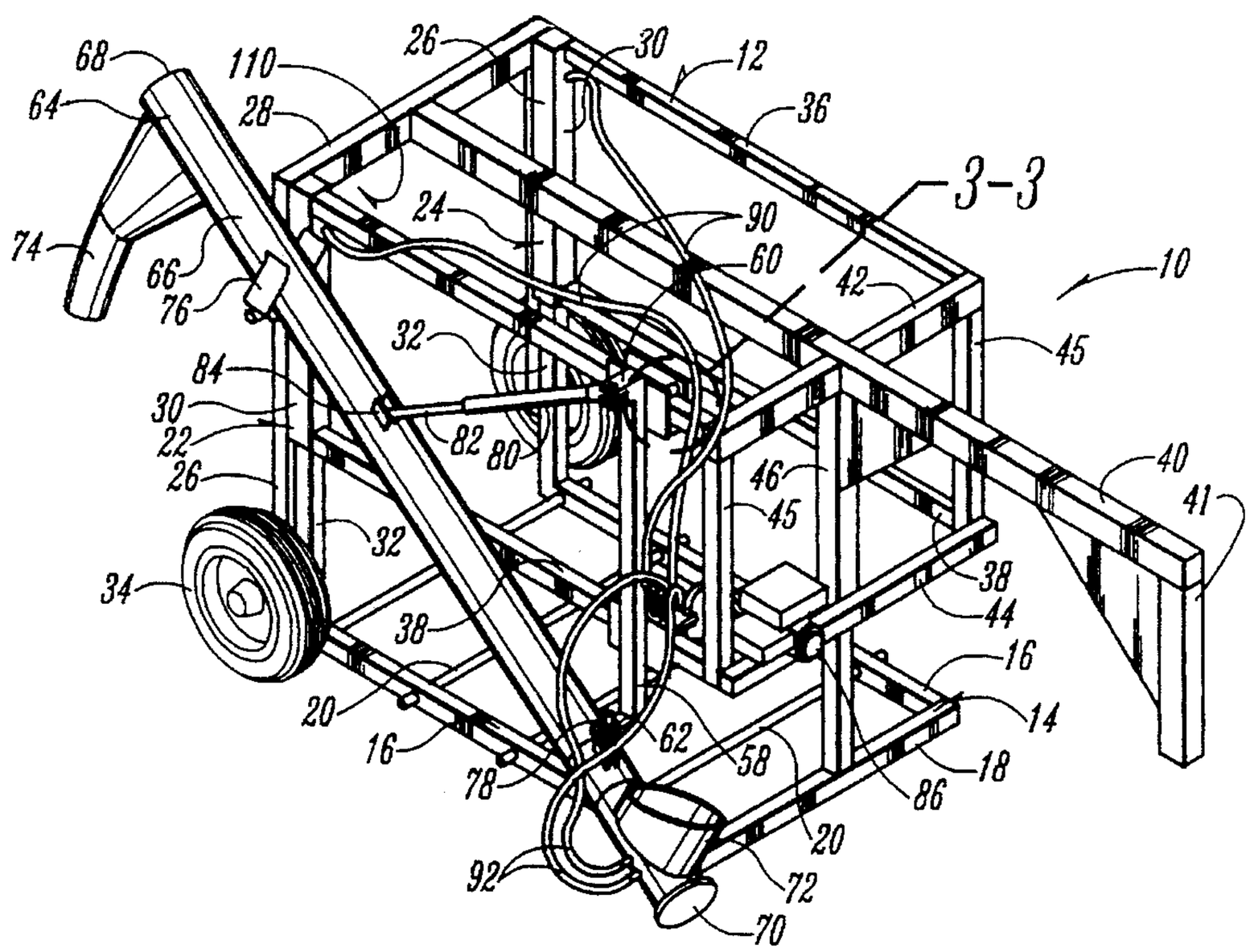

Unverferth Exhibit 2021
Par-Kan v. Unverferth
IPR2024-01427

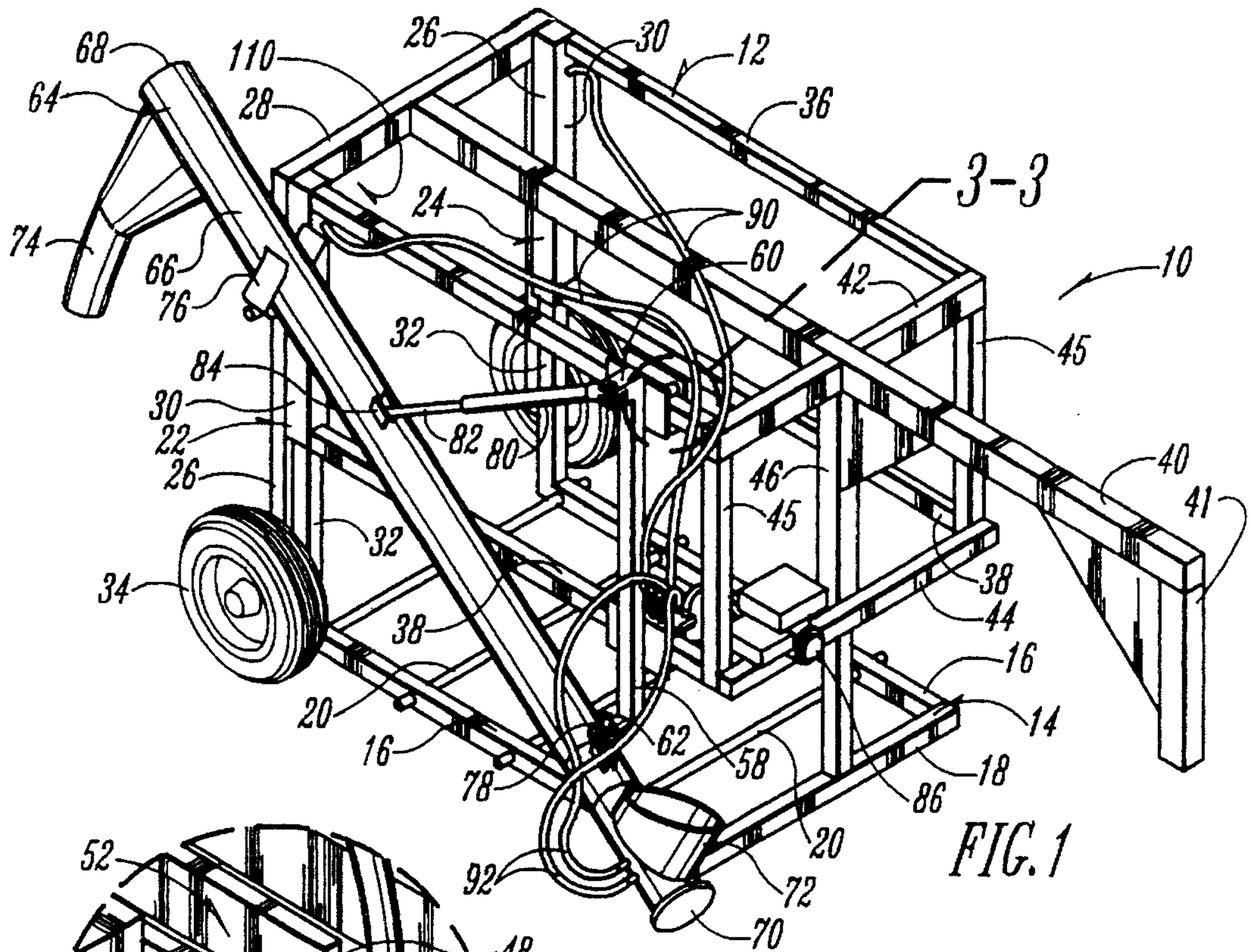

FIG. 1

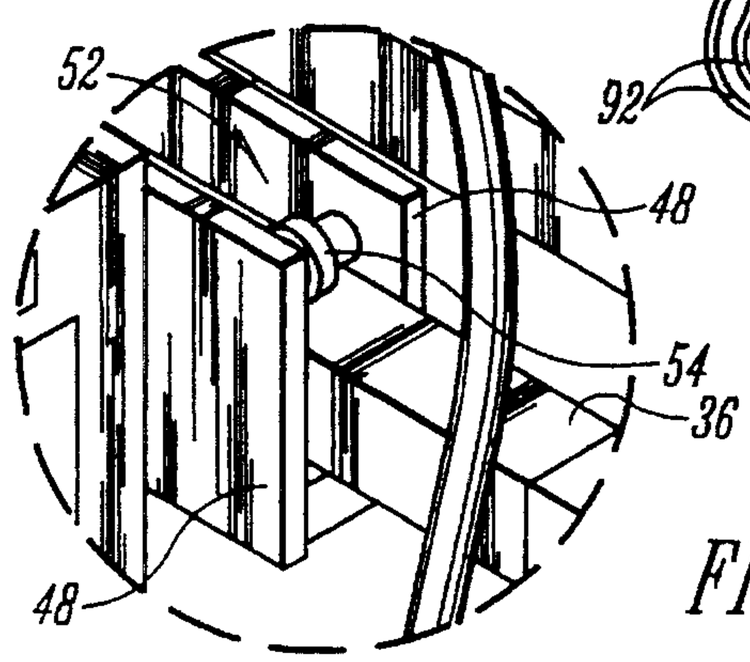

FIG. 3

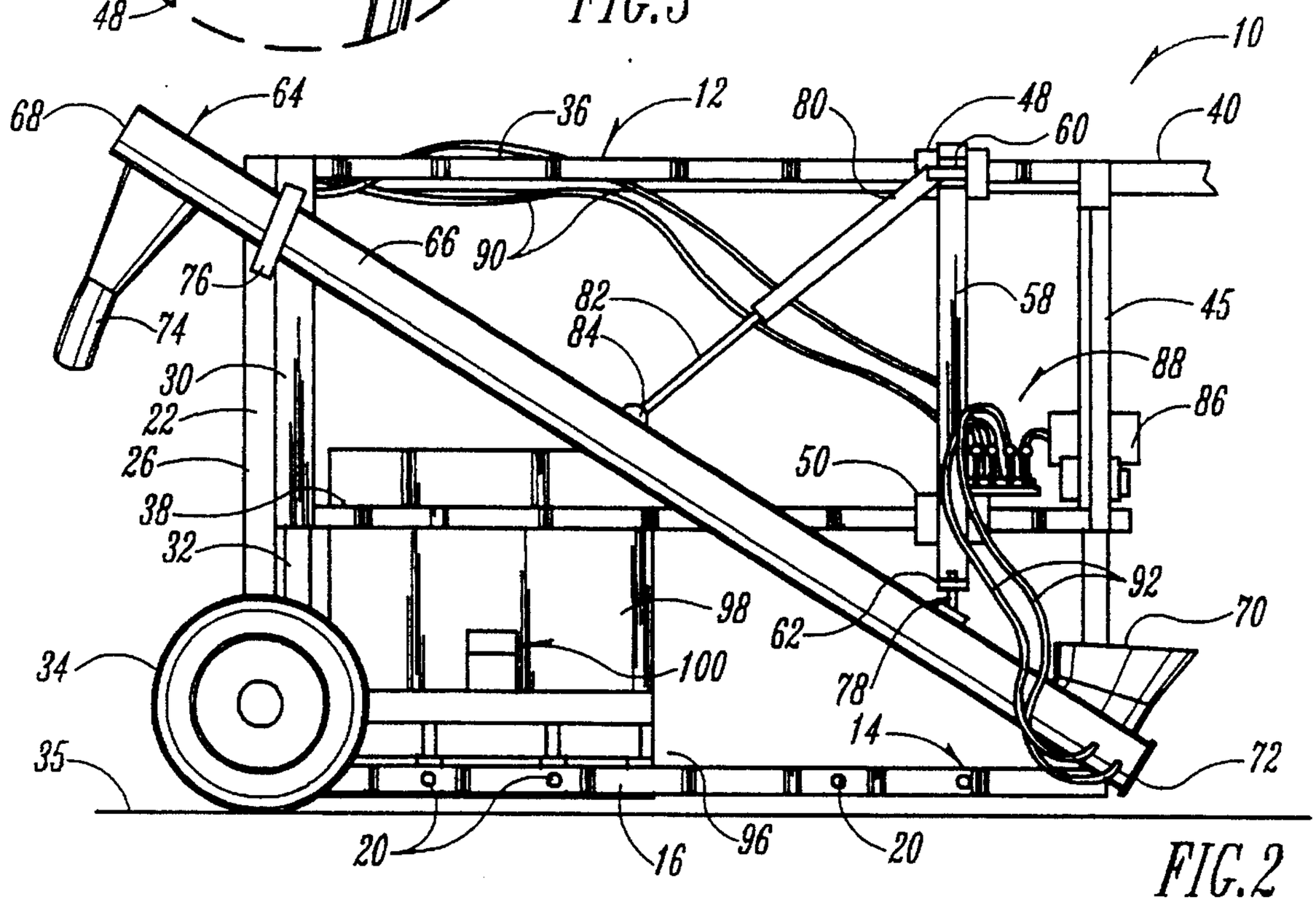

FIG. 2

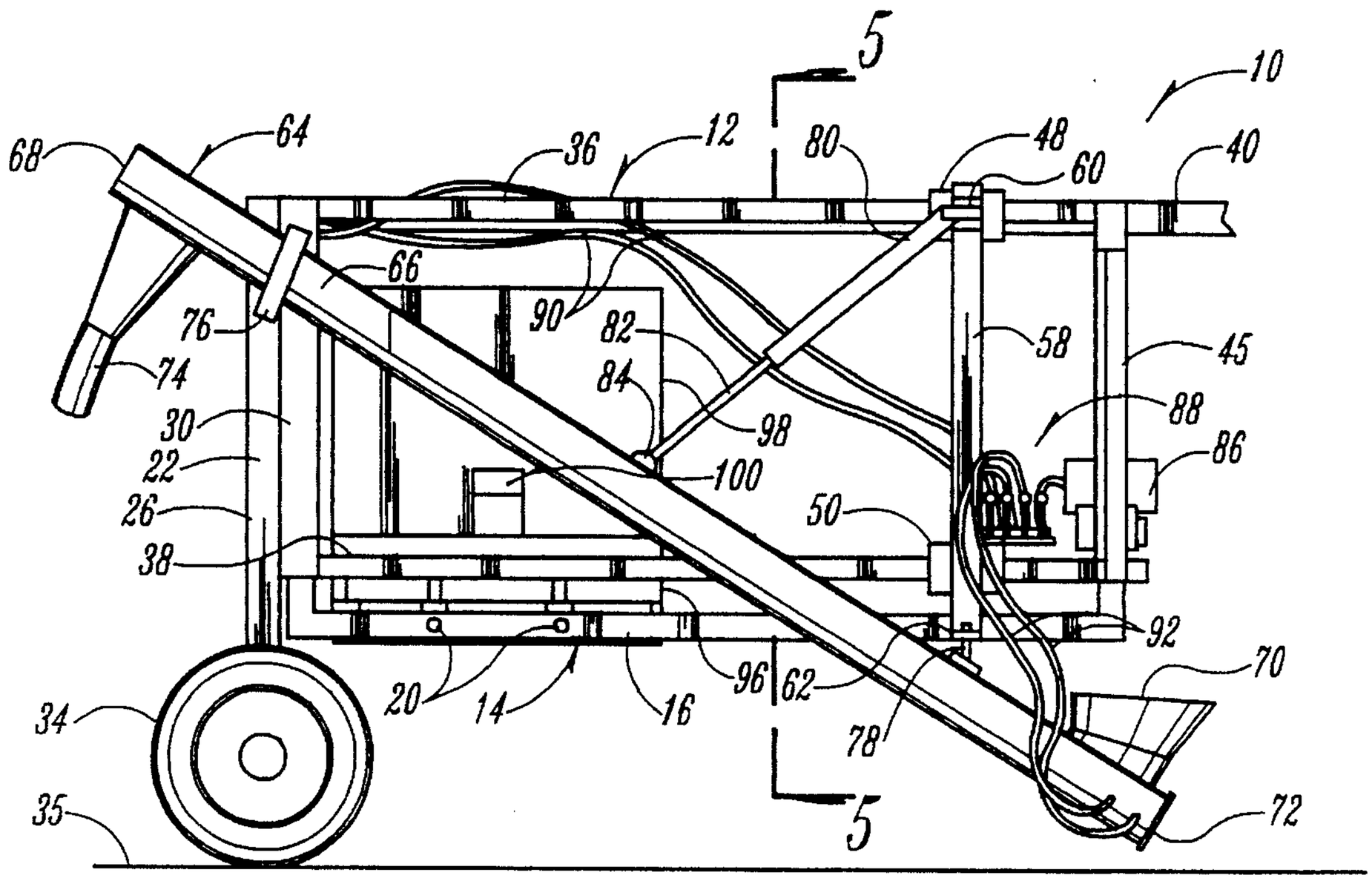

FIG. 4

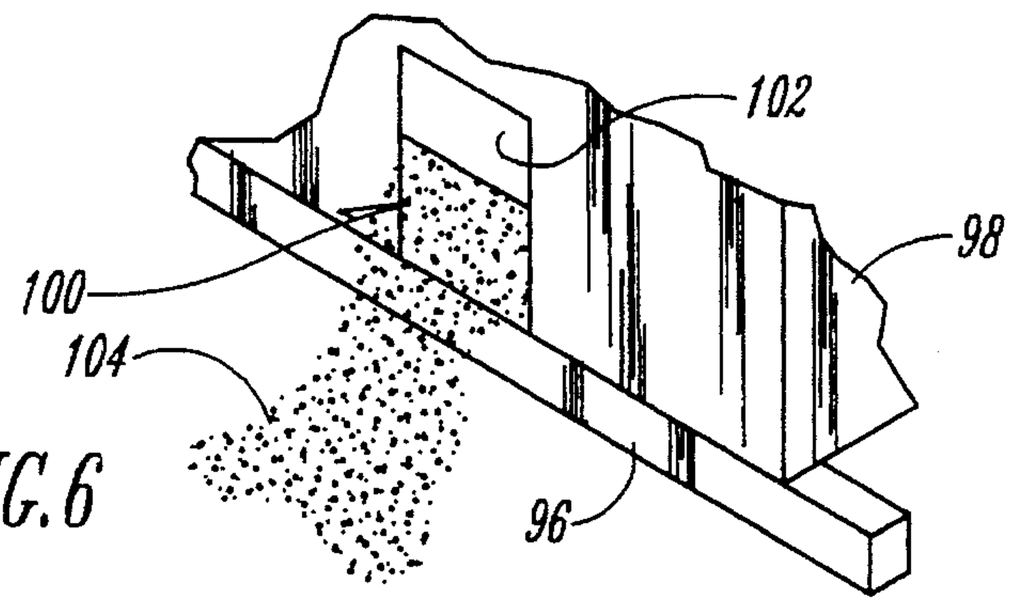

FIG. 6

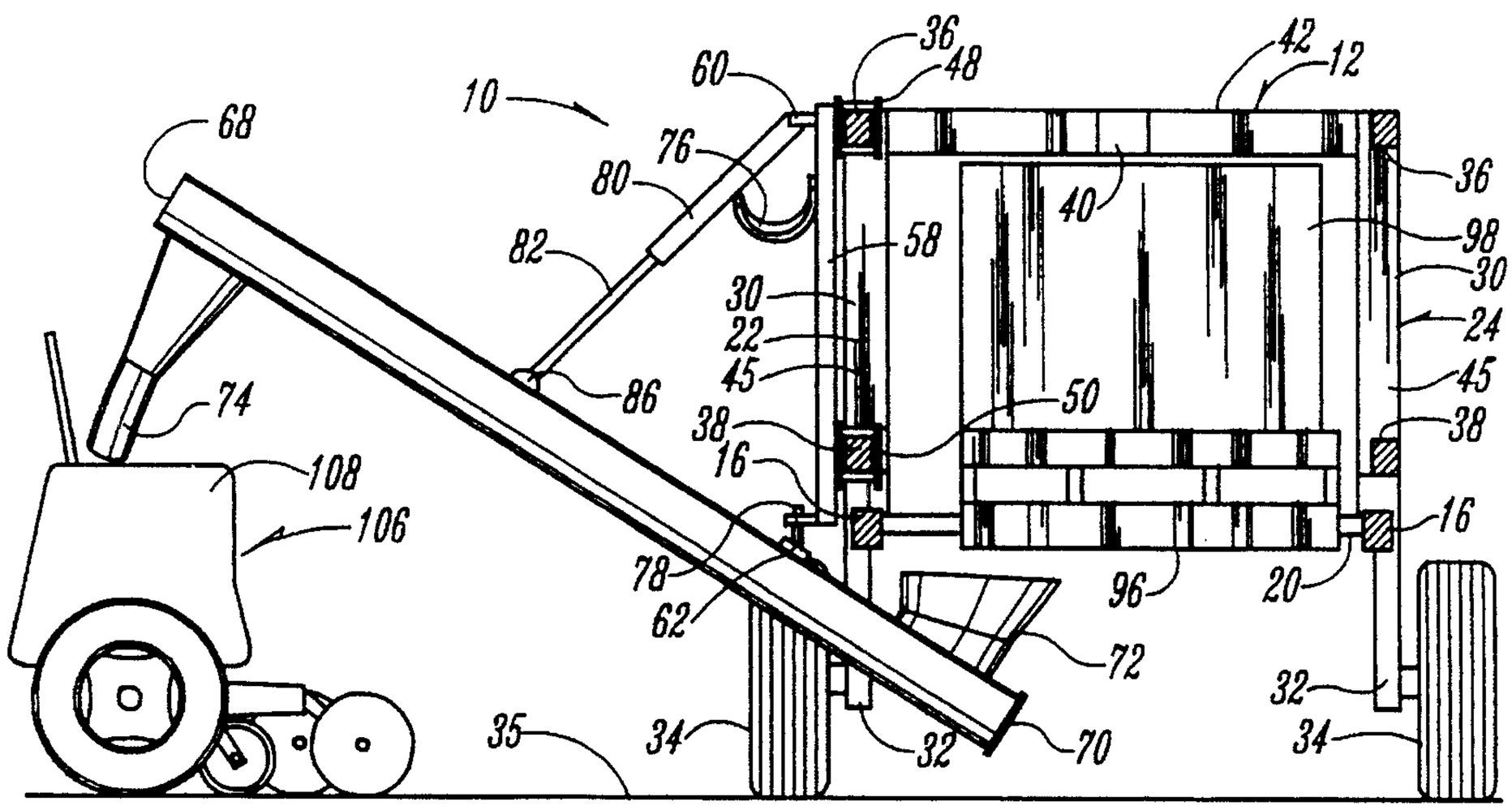

FIG. 5

METHOD AND MEANS FOR FILLING FIELD PLANTERS FROM BULK SEED CONTAINERS

BACKGROUND OF THE INVENTION

Field seeds from hybrid seed companies are normally packaged in bags containing a bushel or so of seed. With modern row crop planters having the capability of planting eight to twelve or more rows at a time, vast quantities of seed are consumed in the course of a planting day. As a result, the farmer operating the planter has to interrupt the planting operation frequently in the course of a day to refill the hoppers on the planter. Typically, each individual seed bag is opened and the contents are dumped into the hoppers on the planter. Some efforts have been made to dump a plurality of bags into an enlarged hopper or wagon, and then conveying the seed from the common source to the individual hoppers on the planter. However, this process necessitates the opening of a plurality of relatively small bags of seed.

In recent times, large rectangular containers containing approximately 2,000 pounds of seed have been designed to avoid the problems of having to open a plurality of smaller seed bags. However, these bulk seed containers which are filled by the companies producing the seed present an additional problem of handling, transportation, and unloading. These bulk seed containers normally have an outlet port and a tapered floor within whereby the grain will flow by gravity out of tile outlet port when the outlet port is opened.

It is therefore a principal object of this invention to provide a method and means for filling the hoppers of seed planters from the bulk seed containers.

A further object of this invention is to facilitate the transportation of the bulk seed containers from a delivery location out to the field where the planter is located.

A further object of this invention is to provide a vehicle for transporting the bulk seed containers, and for unloading the seed containers into the hoppers of the planter after the vehicle has been moved to the field location where the planter is situated.

It is a still further object of this invention to provide a vehicle for filling the hoppers of field planters from bulk containers wherein the hoppers of the planters can be easily filled from the bulk containers without having to move the vehicle supporting the bulk containers each time a different hopper is filled.

These and other objects will be apparent to those skilled in the art.

SUMMARY OF THE INVENTION

The method of this invention comprises the loading of a rectangular bulk seed container onto a transport vehicle; moving the vehicle to a field location adjacent a field planter; opening the seed container so that the bulk seed will flow by gravity into an elongated conveyer means on the vehicle; moving the conveyer with respect to the vehicle so that the conveyer can discharge seed into a plurality of hoppers on the field planter; and operating the conveyer so that the seed will flow continuously from the container through the conveyer and into the hoppers.

The apparatus of this invention comprises a vehicle frame having a lower horizontal seed container support platform and a substantially vertical side frame extending upwardly from the support platform. An inclined auger conveyer is swingably secured to the side frame and is movable from a travel position adjacent the side frame to an angular unloading position with respect to the side frame. The conveyer has a lower inlet end and an upper discharge end. A track is mounted on the side frame and is connected to the conveyer to permit the conveyer to be moved longitudinally with respect to the side frame. A power means on the vehicle frame is connected to the conveyer for operating the conveyer and for moving the conveyer with respect to the side frame.

BRIEF DESCRIPTION OF THE DRAWINGS

FIG. **1** is a perspective view of the vehicle of this invention;

FIG. **2** is an enlarged scale side elevational view of the device of FIG. **1** with the vehicle being shown in its loading position;

FIG. **3** is an enlarged scale sectional view taken on line **3**—**3** of FIG. **1**;

FIG. **4** is a side elevational view similar to that of FIG. **2** but shows the vehicle in its transport position;

FIG. **5** is an end elevational view of the device of this invention shown in its unloading position; and

FIG. **6** is a partial perspective view of the discharge port of the bulk seed container.

DESCRIPTION OF THE PREFERRED EMBODIMENT

The numeral **10** designates the vehicle of this invention having a frame **12** and a rectangular shaped support platform **14**, Platform **14** is comprised of side members **16** and a front member **18**, Cross members **20** extend between side members **16**.

Side frames **22** and **24** extend upwardly from platform **14**, Corner posts **26** extend upwardly from the rearward end of side members **16** and the upper ends thereof are connected by top member **28**, Cylinder posts **30** are positioned adjacent corner posts **26** and have lower ends **32** which extend telescopically downwardly to be connected to ground support wheels **34**. Wheels **34** engage and support the vehicle on ground surface **35**.

The side frames **22** further comprise upper horizontal rails **36** which are spaced from lower horizontal rails **38**, A center beam **40** extends from the center of top member **28** and terminates in a forwardly extending tongue **41** which can be connected to either a truck or a tractor for towing purposes, Cross members **42** extend laterally from center beam **40** and are connected to the forward ends of upper rails **36**, A cross member **44** extends horizontally between the forward ends of lower rails **38**, Vertical posts **45** extend between the forward ends of rails **38** and **40**, A center post **46** extends between the inner section of beam **40** and cross members **42**, and thence downwardly to the center of front member **18** on support platform **14**.

An upper U-shaped carriage bracket **48** is movably mounted on upper rail **36**, and a similar U-shaped carriage bracket **50** is movably mounted on the lower rail **38**. Each bracket has an open upper end **52** with rollers **54** extending between the sidewalls **56** thereof.

A vertical post **58** is secured by its ends to brackets **48** and **50**. A clevis **60** is mounted on the upper end of vertical post **58**, and a clevis **62** is secured to the lower end thereof.

A conventional auger conveyer **64** including auger tube **66** has an upper end **68** and a lower end **70**. Conveyer **64** has an inlet port **72** at its lower end and an outlet spout **74**

secured to its upper end. A U-shaped bracket **76** is secured to corner post **26** to support the auger conveyer **64** in its transport position.

With reference to FIG. **2** a swivel connection **78** connects the lower end of post **58** with the auger tube **66**. A hydraulic cylinder **80** is pivotally and swingably connected to clevis **60** at the upper end of post **58**. The outer end of piston **82** of cylinder **80** is pivotally secured to clevis **84** which is secured to auger tube **66** (FIG. **2**).

A conventional hydraulic pump **86** is mounted on cross member **44** as is hydraulic control panel **88** which is connected to the hydraulic pump by conventional means. Hoses **90** extend from control panel **88** to the upper ends of cylinder posts **30** so that the lower ends **32** thereof can be hydraulically raised or lowered. This in turn permits the wheels **34** to be raised or lowered with respect to the support platform **14**. Hoses **92** connect the control panel **88** witch a hydraulic motor (not shown) in the lower end of auger tube **66** whereby the auger therein is rotated within the tube. A hose **92** extends from control panel **88** to the lower end of cylinder **80** to cause piston rod **82** to be selectively retracted into cylinder **80** to raise the auger **64** with respect to swivel connection **78**. When the lifting hydraulic power conveyed to cylinder **80** through hydraulic hose **94** is removed, the weight of the auger conveyer will permit the auger conveyer to move in a downward direction.

A conventional pallet **96** is used to support a rectangular bulk seed container **98**. Container **98** has a discharge port **100** which can be opened and closed by a conventional slide gate **102**. When the discharge port is opened by lifting the slide gate **102**, the bulk seed **104** will flow by gravity outwardly through port **100**.

A conventional field planter **106** is shown in FIG. **5**. Planter **106** typically would have a plurality of seed hoppers **108** to accommodate a plurality of seed planting assemblies for a plurality of crop rows.

The normal operation of the invention is as follows: The cylinder posts **30** are operated in the manner described to raise the lower ends **32** upwardly into the posts **30** so that the wheels **34** will be moved to the position shown generally in FIG. **2**. This places the support platform **14** essentially at the level of the ground surface **35**. A conventional loader will lift the pallet **96** with the loaded bulk seed container **98** through the open space **110** existing between posts **26**. The pallet and the container are deposited on the support platform **14**. The hydraulic power to the cylinder post **30** is then invoked to raise the wheels **34** from the position of FIG. **2** to the transport position of FIG. **4**. The loaded vehicle **10** is then pulled to the field location where the planter **106** is located.

The cylinder **80** is thereupon actuated to lift the auger conveyer **64** out of bracket **76**. The conveyer **64** can then be manually pivoted from the position shown in FIG. **4** to the general position shown in FIG. **5**. The auger can be moved longitudinally with respect to the vehicle by means of the carriage brackets **48** and **50** rolling on the upper and lower rails **36** and **38** to permit the inlet port **72** of the auger to be located adjacent and below the discharge port **100** of the bulk seed container **98**. Similarly, the upper end of the conveyer **64** and outlet spout **74** can be moved to register with the position of the planter hopper **108** which is being filled. The cylinder **80** can be actuated to adjust the height of the upper end **68** of the auger so that the outlet spout **74** will be at a suitable height to fill the hopper. The slide gate **102** of discharge port **100** is then opened, and the hydraulic motor of the auger is then actuated. The bulk seed **104** will flow through the discharge port **100**, thence upwardly through the auger **64**; and thence downwardly through the outlet spout **74** into the hopper **108**.

When the first hopper **108** is filled, the conveyer **64** can be pivoted about clevis **58** with the combined operation of cylinder **80** to move the outlet spout **74** adjacent another hopper on the planter. This operation is continued until all of the hoppers on the planter are filled.

It is seen from the foregoing that the vehicle of this invention will easily accommodate the bulk seed containers and permit the contents thereof to be easily and quickly moved to the hoppers of conventional field planters. Thus, this invention will achieve all of its stated objectives.

What is claimed is:

1. The method of filling a field planter from bulk seed containers, comprising:

loading a rectangular bulk seed container containing bulk seeds onto a transport vehicle having a vertical side frame,

pivoting and slidably mounting an elongated inclined conveyer in a travel position on said side frame in parallel relation thereto,

moving said vehicle to a field location adjacent a field planter,

opening said seed container so that said bulk seed will flow by gravity into a lower end of said elongated conveyer,

pivoting said inclined conveyer in a transverse direction with respect to said side frame, and sliding said conveyer along said side frame, so that said conveyer can discharge seed into a hopper on said field planter,

and operating said conveyer so that said seed will flow continuously from said container through said conveyer and into said hopper.

2. The method of claim **1** wherein said vehicle has a horizontal transport frame that is lowered to a ground level to facilitate loading of said bulk seed container thereon, and then raised to an elevated position for moving said vehicle to said field location.

3. The method of claim **1** wherein said conveyer is moved from the travel position on said vehicle when said vehicle is being moved to said field location, and is then moved with respect to said vehicle to an operating position to receive seed from said container.

4. The method of claim **3** wherein said conveyer has an inlet end that is moved with respect to said vehicle to be aligned with a seed outlet port on said container.

5. The method of claim **1** wherein said conveyer has an outlet end that is progressively moved to a discharge position adjacent a plurality of seed hoppers on said field planter.

6. A vehicle for filling field planters from bulk seed containers, comprising,

a vehicle frame comprising a longitudinally extending lower horizontal seed container support platform and a substantially vertical side frame extending upwardly from said support platform,

an inclined conveyer swingably and longitudinally movably secured to said side frame and movable from an inclined travel position folded in parallel relation to and against said side frame to a transverse angular unloading position with respect to said side frame,

said conveyer having a lower inlet end and an upper discharge end, with said inlet end dwelling underneath said support platform when said conveyer is in said unloading position,

track means on said side frame and connected to said conveyer to permit said conveyer to be moved longitudinally with respect to said side frame,

and power means on said vehicle frame and connected to said conveyer for operating said conveyer and for moving said conveyer with respect to each side frame.

7. The vehicle of claim **6** wherein wheels are secured to said vehicle frame to support said vehicle on a ground surface, and second power means connecting said vehicle and said vehicle frame to raise and lower said vehicle frame with respect to said ground surface.

8. The vehicle of claim **7** wherein the lower inlet end of said conveyer is located below the level of said support platform when said vehicle frame is raised to its uppermost position.

9. The vehicle of claim **6** wherein said conveyer is so positioned on said side frame to permit said inlet end to be moved to a position below the level of said support platform to receive seed flowing by gravity from an outlet port on a seed container supported on said platform.

10. The vehicle of claim **9** wherein said track means comprises a pair of spaced upper and lower horizontal rails, a carriage bracket on said rail, a vertical post secured to and extending between said brackets, said conveyer pivotally secured to the lower end of said post, a hydraulic cylinder means having upper and lower ends with said upper end being secured to said bracket on said upper rail, and with said lower end of said cylinder means being secured to said conveyer to pivotally raise or lower said conveyer about its pivotal connection to the lower end of said post.

* * * * *