Botkin & Hall, LLP
ATTORNEYS AT LAW
SUITE 400, JEFFERSON CENTRE
105 EAST JEFFERSON BOULEVARD
SOUTH BEND, INDIANA 46601-1913
TELEPHONE: (574) 234-3900
FACSIMILE: (574) 236-2839
www.botkinhall.com

Michael D. Marston
mmarston@bhlawyers.net

June 17, 2013

Joseph A. Hynds, Esq.
Brett A. Postal, Esq.
Lisa N. Phillips, Esq.
ROTHWELL, FIGG, ERNST & MANBECK, P.C.
607 14TH Street, N.W., Suite 800
Washington, DC 20005

Re: *Unverferth Mfg. Co., Inc. v. Par-Kan Co.*
Case No. 13-cv-0097 (TLS) (N.D. Ind.)

Dear Mr. Hynds, Mr. Postal, Ms. Phillips:

In accordance with Local Patent Rule 3-1(e), Par-Kan submits its Preliminary Contentions of Invalidity. In accordance with Local Patent Rule 3-1(f)(1), Par-Kan refers Unverferth to its Exhibit 8 submitted with its Infringement Contentions. Also the Exhibits submitted herewith and identified as 1-11 are Prior Art as required by Local Patent Rule 3-1(f)(2). Par-Kan Company ("Par-Kan") reserves the right to supplement this document production.

LIST OF EXHIBITS CITED:

1. Convey-All 2002 Seed Tender ("Convey-All 2002")
2. Convey-All 2005 Seed Tender ("Convey-All 2005")
3. GP 1997 1997 ADC2220 Model ("GP 1997")
4. Great Plains ADC2220 Model 1997 parts manual Page 7-1 ("GPM 1997") – what may be considered a base as claimed in the 8,221,047 patent is annotated as part B.
5. Great Plains ADC2220 Model updated parts manual March 1, 2000 edition ("GPM 2000")
6. U.S. Patent 7,267,519 ("the '519 patent")
7. Par-Kan 2003 Seed Tender with pivotable conveyor ("PK 2003")
8. U.S. Patent 7,500,814 ("the ' 814 patent")
9. U.S. Patent 5,888,044 ("the '044 patent")
10. Unverferth Seed Runner advertisement ("Seed Runner Ad") – This is produced as Bates No. UM-PKan0000289 by Unverferth as demonstrating disclosure before the priority date of the '047 patent.
11. U.S. Patent 7,500,817 ("the '817 patent")

Unverferth Exhibit 2025
Par-Kan v. Unverferth
IPR2024-01427

UM-PK0000818

DEFINITIONS:

1. Seed Runner – this term shall be used throughout this paper in reference to the device covered by the '047 patent which is being challenged as invalid. Unverferth as the owner of the '047 patent has referred to the device covered by the '047 patent as the Seed Runner as evidenced by Exhibit 10 (Seed Runner Ad) listed above.

Claim 1 of U.S. Patent 8,221,047 ("the '047 patent") is unpatentable under 35 U.S.C. § 103(a) as obvious over Convey-All 2005 in view of GP 1997 or GPM 2000. There was also motivation for one of ordinary skill in the art to combine these prior art references before the filing of the '047 patent to arrive at the device as claimed in Claim 1. GP 1997 shows an ADC2220 model Great Plains seed tender that has a loading and unloading and unloading capacity using the same conveyor. GP 1997 shows that there was a desire to use a conveyor articulated on a seed tender to load and unload that seed tender. The state of the art of using the same conveyor attached to a seed tender to load and unload the tender is also shown in GP 1997 which states, "Dual purpose design allows you to load and unload with the same auger." Pages 3 and 4 of Convey-All 2005 show horizontal pivot axis A that will allow the conveyor to pivot about the horizontal axis formed from the bolt defining axis A. The conveyor will also pivot about a vertical axis B on its base C. Therefore, it would be reasonable for one of ordinary skill in the art to have combined the teaching of a seed tender that can load and unload itself as shown in GPM 1997 or GPM 2000, with the teaching of a horizontal pivot of Convey-All 2005 to arrive at the device as claimed in Claim 1.

Claim 1 is unpatentable under 35 U.S.C. § 103(a) as obvious over the '817 patent in view of GPM 1997 or GP 1997. Both GP 1997 and GPM 1997 describe the ADC2220 seed tender that teaches a self loading and unloading tender through use of the same conveyor that is pivotally supported by a pivotable arm from below the conveyor. GP 1997 is an advertisement of the ADC2220 model shown in its parts manual GPM 1997. The '817 patent teaches a support arm A that pivots about horizontal axis B. Both arm A and horizontal axis B are well shown in annotated FIG. 5 of the '817 patent. The horizontal axis B of the support arm A and the fact that the support arm A supports the conveyor from below combine with the teaching of the GPM 1997 or GP 1997 to teach a self loading and unloading conveyor that is supported from below with an arm that pivots about a horizontal axis. Thus, Claim 1 is rendered obvious. During the Examination of the '047 patent, the Examiner rejected Claims 1-5 and 9-11 as obvious over the '817 patent in view of the '044 patent based on similar reasoning. These claims were canceled in favor of the nearly identical substance of Claim 1, however an affidavit was entered to overcome the combination of '817 and '044 patents.

Additionally, Claim 1 of the '047 patent is obvious over the combination of the '044 patent combined with either GPM 1997, GPM 2000, or the '519 patent. GPM 1997, GPM 2000 and the '519 patent teach a support arm supporting a conveyor from below and with the conveyor horizontally and vertically pivoting at the end of the support arm. However, each of these fail to teach the support arm pivoting horizontally with respect to the seed tender. The teaching of a horizontally pivoting support arm 53 is shown in the '044 patent. The only

difference between the support arm in the '044 patent and the invention as claimed in Claim 1 is that the support arm 53 in the '044 patent supports the conveyor from above instead supporting the conveyor from below as in the '047 patent. Unverferth, the owner of the '044 patent, must have felt differences between the device of the '044 patent and the Seed Runner were insignificant. The Seed Runner Ad published before the priority date of the '047 patent stated that the '044 patent covered the device of the '047 patent. The Seed Runner Ad was specific in asserting coverage of the Seed Runner by the '044 patent because it said, "Unloading efficiency is enhanced by the Unverferth Seed Runner's patented conveyor design allowing it to rotate a full 180 [degrees] for self-loading." At that time, the patent application for the '047 patent had not yet been filed. To remove any doubt that Unverferth meant the '044 patent covered the Seed Runner as claimed in Claim 1, the only patent mentioned on the second page of the Seed Runner Ad lists the '044 patent and states, "other patents applied for." It is evident Unverferth felt the Seed Runner was an obvious variant of the '044 patent and the Examiner of the application that became the '047 patent shared this opinion.

Unverferth has committed inequitable conduct in obtaining the '047 patent when its marketing director made false statements in an affidavit to procure the patent. The Examiner had rejected what became Claims 1 and 20, which was overcome with the affidavit. In addition to the specific inequitable conduct already pleaded, the discovery thus far indicates the statement in the affidavit that the claims of the '047 patent application were not obvious directly contradicts Unverferth's own marketing materials, namely, the Seed Runner Ad.

U.S. Patent 8,221,047 **Claim 1.** A seed or grain tender comprising: a frame;	GPM 2000 teaches a frame as shown on page 7-1, which is dated 3/16/1998. The frame supports wheel hubs shown on the same page. The frame is also taught on page 2-1, which shows the components of the frame. The frame is below the hopper.
a main hopper mounted on said frame and having a main hopper discharge;	GPM 2000 teaches hoppers shown on the cover page. Page 2-13 shows how the hopper assembles on top of the frame. GPM 1997 shows an overview of how the hopper functions within the tender.
a base mounted on said frame below said main hopper discharge;	GPM 2000 teaches a base on Pages 2-13, and 7-1. The base is shown in dotted lines and receives pin 21 on Page 7-1 of GPM 2000. The base is below the main hopper discharge.
a support arm having first and second ends;	GPM 2000 teaches on page 7-1 a support arm numbered 15, this support arm has a first end that pivots about pivot spacer tube 12 (described on page 7-2), the support arm also has a second end that receives auger swivel support 18 (described on page 7-2)
a first coupling connecting said first end of said support arm with said base, said first	GPM 2000 teaches an arm pivotally connected on page 7-1.

coupling being rotatable in relation to said base about a first vertical axis of rotation,	teaches the first coupling is spacer pivot tube 12 on page 7-1 that is mated with bolt 24 that forms a first vertical axis of rotation; also part B may be considered the base and in this case the first vertical axis of rotation would be about pin 21.
and said first end of said support arm being rotatable in relation to said first coupling about a first horizontal axis of rotation;	Convey-All 2005 teaches a horizontal axis A about which the conveyor may pivot. The '817 patent also teaches a horizontal pivot axis annotated as axis B in FIG. 5. The '044 patent also teaches a horizontal axis A as annotated in FIGS. 4 and 5. The differences in height make it apparent that the arm 53 pivots horizontally about base B GPM 2000 teaches the first coupling is spacer pivot tube 12 on page 7-1 that is mated with bolt 24 that forms a first vertical axis of rotation.
a conveyor having a longitudinal axis and first and second ends, a conveyor hopper at said first end, a conveyor discharge at said second end, and an internal elevator for moving seed or grain from said conveyor hopper to said conveyor discharge; and	GPM 2000 teaches conveyor 26 has first and second ends on page 7-1. GPM 2000 and GPM 1997 teach on page 7-1 the conveyor 26 has a hopper 43 at a first end and a discharge near the end proximate the number 26. GPM 2000 teaches that the conveyor uses an auger for an internal elevator as known to those skilled in the art and as described on page 7-2.
a second coupling connecting said second end of said support arm with said conveyor at an approximate center of gravity of said conveyor, said second coupling defining a second vertical axis of rotation that is not parallel to said conveyor longitudinal axis,	GPM 2000 on the cover page shows the auger in a stowed position alongside the hoppers. It also shows the auger on 6-1. Page 7-1 shows that it is pivotally connected in two places that would allow it to pivot into the positions called for in Claim 1 as would be known to one of basic skill in the art. The vertical pivot axis is about the centerline of pin 18.
and said conveyor being rotatable in relation to said second end of said support arm about said second vertical axis of rotation between an	GP 1997 teaches the same feature by explicitly stating the positions of the conveyor which pertain to the same ADC2220 model shown in

unloading position wherein said conveyor hopper is disposed below said main hopper discharge to receive agricultural product from said main hopper and a loading position wherein said conveyor discharge is disposed above said main hopper to dispense agricultural product into said main hopper.	the GPM 2000.

2. Claim 2 of U.S. Patent 8,221,047 is unpatentable under 35 U.S.C. 103(a) as being obvious over GPM 2000 or GP 1997.

Claim 2. The seed or grain tender of claim 1, wherein said support arm extends upwardly at an acute angle from said base.	GPM 2000 teaches on page 7-1 the same acute angle as Claim 2.

3. Claim 3 of U.S. Patent 8,221,047 is unpatentable under 35 U.S.C. 103(a) as obvious over GPM 2000 or GP 1997.

Claim 3. The seed or grain tender of claim 2, wherein said conveyor is parallel to said support arm in said unloading position.	GPM 2000 teaches one skilled in the art that the auger would be substantially parallel to the arm when the auger is positioned to be below the discharge of the hopper. The relationships leading to this are shown on page 7-1. GP 1997 teaches the same, the lower middle photograph shows a loading position and one with ordinary skill in the art would recognize that the pivot would force a user to have the conveyor non-parallel in an unloading position.

4. Claim 4 of U.S. Patent 8,221,047 is unpatentable under 35 U.S.C. 103(a) as obvious over GP 1997, GPM 1997, GP 2000, or Convey-All 2002.

Claim 4. The seed or grain tender of claim 3, wherein said conveyor is disposed above said support arm in said unloading position.	GPM 2000 teaches one of ordinary skill in the art that this would necessarily be true due to the pivot points provided as shown on page 7-1. GP 1997 shows that the ADC2220 shown in GPM 2000 and GPM 1997 has the conveyor over the support arm in the lower middle photograph. Convey-All 2002 shows this configuration on Page 2.

5. Claim 5 of U.S. Patent 8,221,047 is unpatentable under 35 U.S.C. 103(a) as being obvious over GPM 2000, GP 1997, GPM 1997, or the '814 patent.

Claim 5. The seed or grain tender of claim 1, wherein said conveyor is rotatable in relation to said second coupling about a second horizontal axis of rotation.	GPM 2000 teaches one of ordinary skill in the art that this would necessarily be true due to the pivot points within part 18 (auger swivel support as named on page 7-2 and shown on page 7-1) the horizontal axis being about bolt 25. GPM 1997 shows the same thing. One of ordinary skill in the art would recognized the ADC2220 shown in GP 1997 has this feature due to the ability to load and unload, this is also corroborated by the GPM 1997 an GPM 2000 which describe in detail the ADC2220. The '814 patent shows horizontal pivot axis A in FIG 1 and 2.

6. Claim 6 of U.S. Patent 8,221,047 is unpatentable under 35 U.S.C. 103(a) as being obvious over GPM 2000 or GPM 1997.

Claim 6. The seed or grain tender of claim 5, wherein said second horizontal axis of rotation extends through said second coupling.	GPM 2000 shows the pivot points within part 18 (auger swivel support as named on page 7-2 and shown on page 7-1) which serves as the second coupler. Bolt 25 which serves as the axis extends through the coupler 18. The same is shown in GPM 1997.

7. Claim 7 of U.S. Patent 8,221,047 is unpatentable under 35 U.S.C. 103(a) as being obvious over GPM 2000 or GPM 1997.

Claim 7. The seed or grain tender of claim 1, further comprising a stand coupled with said first end of said conveyor and movable between a stowed position allowing said conveyor hopper to be positioned below said main hopper discharge when said conveyor is in said unloading position and an extended position supporting said conveyor hopper above the ground when said conveyor is in said loading position.	GPM 2000 shows a stand in the upper right corner near number 44 on which the auger rests when it is upon the ground.

8. Claim 8 of U.S. Patent 8,221,047 is unpatentable under 35 U.S.C. 103(a) as obvious over GPM 2000 or GPM 1997.

Claim 8. The seed or grain tender of claim 1, wherein said first vertical axis extends through said first end of said support arm.	GPM 2000 and GPM 1997 show the vertical axis being about the pivot spacer tube 12 in the first end of the arm 15 as shown on page 7-1.

9. Claim 9 of U.S. Patent 8,221,047 is unpatentable under 35 U.S.C. 103(a) as obvious over the GPM 2000 in view of '044; or the '814 patent in view of '044; or the '817 patent in view of GPM 2000.

Claim 9. The seed or grain tender of claim 1, wherein said first vertical axis extends through said base.	GPM 2000 shows the vertical axis being about the pivot spacer tube 12 in the first end of the arm 15 as shown on page 7-1. Also, the inner arm 20 pivots about shaft 21 as shown on page 7-1. The '044 patent shows a vertical axis about which the first axis of the arm pivots, as shown in FIGS. 1 and 2. The '814 patent shows arm A in FIGS. 1A and 2 and also shows the arm A being below the conveyor.

10. Claim 10 of U.S. Patent 8,221,047 is unpatentable under 35 U.S.C. 103(a) as obvious over GPM 2000 or GPM 1997.

Claim 10. The seed or grain tender of claim 1, wherein said second end of said support arm terminates at or near said approximate center of gravity of said conveyor.	GPM 2000 and GPM 1997 show the auger swivel support 18 connected at the approximate center of gravity of the conveyor.

11. Claim 11 is unpantentable as obvious under 35 U.S.C. 103(a) over the GPM 2000 in view of the '044 patent in view of GPM 2000 or GPM 1997.

Claim 11. The seed or grain tender of claim 1, wherein said first end of said support arm is fixed at a first height and said second end of said support arm is pivotable between a range of heights.	GPM 2000 shows the support arm 15 on page 7-1. The '044 patent shows a hydraulic cylinder 64 in FIG. 1 that may be used to raise and lower the arm 53.

12. Claim 12 is unpantentable as obvious under 35 U.S.C. 103(a) over the GPM 2000 in view of the '044 patent.

Claim 12. The seed or grain tender of claim 1, further comprising a lift device for adjusting a height of said second end of said support arm.	GPM 2000 shows the support arm 15 on page 7-1. The '044 patent shows a hydraulic cylinder 64 in FIG. 1 that may be used to raise and lower the arm 53.

13. Claim 13 is unpantentable as obvious under 35 U.S.C. 103(a) over the GPM 2000 in view of the '044 patent, or the '817 patent.

Claim 13. The seed or grain tender of claim 12, wherein said lift device is a pressurized cylinder.	GPM 2000 shows the support arm 15 on page 7-1. FIG. 2 of the '817 patent shows a hydraulic cylinder A. The '044 patent shows a hydraulic cylinder 64 in FIGS. 4 and 5.

14. Claim 14 is unpantentable as obvious under 35 U.S.C. 103(a) over the GPM 2000 in view of the '044 patent, or the '817 patent.

Claim 14. The seed or grain tender of claim 12, wherein said lift device is a hydraulic cylinder.	GPM 2000 shows the support arm 15 on page 7-1. FIG. 2 of the '817 patent shows a hydraulic cylinder A. The '044 patent shows a hydraulic cylinder 64 in FIGS. 4 and 5.

15. Claim 15 of U.S. Patent 8,221,047 is unpatentable as obvious under 35 U.S.C. 103(a) over the GPM 2000 or GPM 1997 in view of the '044 patent.

Claim 15. The seed or grain tender of claim 1, wherein said first coupling is a U-shaped member with a horizontal base portion and a pair of upright portions, and wherein said first	GPM 2000 shows the support arm 15 on page 7-1 as does GPM 1997, base B is U-shaped.

horizontal axis extends through said upright portions of said first coupling.	The '044 patent shows a pin and clevis U-shaped connection at the first end of arm 53 in FIG. 4 which is well known to those skilled in the art. The sides of this clevis being substantially vertical as would be necessary to raise and lower the arm 53 as shown in FIG. 4.

16. Claim 16 of U.S. Patent 8,221,047 is unpatentable under 35 U.S.C. 103(a) over GPM 2000 or GPM 1997 in view of the Convey-All 2005.

Claim 16. The seed or grain tender of claim 1, further comprising a locking mechanism for locking or unlocking said support arm in relation to said base.	GPM 2000 pages 7-1 and 7-2 dated 3/16/1998 show that pin 46 and cotter pin 47 may be used to lock the arms 15 and 20 due to pin 46 being inserted into at least one mating hole on the frame. Convey-All 2005 shows a spring pin P engaging a plurality of holes H to a rail welded to a fame below the hopper on Page 1.

17. Claim 17 of U.S. Patent 8,221,047 is unpatentable under 35 U.S.C. 103(a) as obvious over Convey-All 2005 in view of GPM 2000 and the '044 patent.

Claim 17. The seed or grain tender of claim 16, wherein said locking mechanism includes a pin releasably engageable with one of a plurality of holes formed in said base.	GPM 2000 pages 7-1 and 7-2 dated 3/16/1998 show that pin 46 and cotter pin 47 may be used to lock the arms 15 and 20 due to pin 46 being inserted into at least one mating hole on the frame. Convey-All 2005 shows a spring pin P engaging a plurality of holes H to a rail welded to a fame below the hopper on Page 1.

18. Claim 18 of U.S. Patent 8,221,047 is unpatentable under 35 U.S.C. 103(a) as obvious over GPM 2000 or GPM 1997 in view Convey-All 2005.

Claim 18. The seed or grain tender of claim 17, wherein said pin is spring-biased toward said holes in said base.	Convey-All 2005 shows a spring pin P engaging a plurality of holes H to a rail welded to a fame below the hopper on page 1.

19. Claim 19 is unpatentable under 35 U.S.C. 103(a) as obvious over Convey-All 2005.

Claim 19. The seed or grain tender of claim 17, wherein said internal elevator includes a	Convey-All 2005 shows a belt type conveyor and it would be obvious to one skilled in the

motor-driven belt.	art that a belt type conveyor could be used in place of an auger conveyor or vice versa.

20. Claim 20 of U.S. Patent 8,221,047 is unpatentable under 35 U.S.C. 103(a) for many of the reasons listed regarding Claim 1. Claim 20 is unpatentable under 35 U.S.C. 103(a) as obvious in view of GPM 2000 or GPM 1997 in view of the '044 patent and further in view of the '814 patent. Claim 20 differs from Claim 1 in the fact that it claims "a lift device extending from the base…at an acute angle…." Claim 20 also differs from Claim 1 because Claim 20 uses the term "motor-driven elevator" instead of the Claim 1 term "internal elevator" to describe the conveyor labeled as 104 in the '047 patent drawings. A further difference of Claim 20 over Claim 1 is that the conveyor be parallel to the support arm in the unloading position, a concept taught by the '814 patent. Therefore, substantively, Claim 1 and 20 are nearly identical and many of the reasons that Claim 1 is unpatentable are applicable to Claim 20.

U.S. Patent 8,221,047 **Claim 20.** A seed or grain tender comprising: a frame;	GPM 2000 teaches a frame as shown on page 7-1, which is dated 3/16/1998. The frame supports wheel hubs shown on the same page. The frame is also taught on page 2-1, which shows the components of the frame. The frame is below the hopper.
a main hopper mounted on said frame and having a main hopper discharge	GPM 2000 teaches hoppers shown on the cover page. Page 2-13 shows how the hopper assembles on top of the frame. GPM 1997 shows an overview of how the hopper functions within the tender.
a base mounted on said frame below said main hopper discharge	GPM 2000 teaches a base on Pages 2-13, and 7-1. The base is shown in dotted lines and receives pin 21 on Page 7-1 of GPM 2000. The base is below the main hopper discharge.
a support arm having first and second ends	GPM 2000 teaches on page 7-1 a support arm numbered 15, this support arm has a first end that pivots about pivot spacer tube 12 (described on page 7-2), the support arm also has a second end that receives auger swivel support 18 (described on page 7-2).
a first coupling connecting said first end of said support arm with said base, said first coupling being rotatable in relation to said base about a first vertical axis of rotation, and said first end of said support arm being rotatable in relation to said first coupling about a first horizontal axis of rotation:	GPM 2000 teaches an arm pivotally connected on page 7-1. GPM 2000 teaches the first coupling is spacer pivot tube 12 on page 7-1 that is mated with bolt 24 that forms a first vertical axis of rotation. Convey-All 2005 teaches a horizontal axis A about which the conveyor may pivot. The '817 patent also teaches a horizontal pivot

	axis annotated as axis B in FIG. 5. The '044 patent also teaches a horizontal axis A as annotated in FIGS. 4 and 5. The differences in height make it apparent that the arm 53 pivots horizontally about base B
a lift device extending from said base to a portion of said support arm between said first and second ends such that said support arm extends upwardly at an acute angle from said base:	The '044 patent shows an arm 53 that can be positioned in an acute angle relative a base. FIGS. 4 and 5 of the '044 patent show hydraulic lift cylinder 64. Depending on the point of view, hydraulic lift cylinder is at an acute angle with the base and the arm 53 can be at an acute angle as well. The '817 patent FIGS. 1A and 2 show hydraulic lift cylinder A at an acute angle with the base to which it is attached below the hopper discharge.
a conveyor having a longitudinal axis and first and second ends, a conveyor hopper at said first end, a conveyor discharge at said second end, and a motor-driven elevator for moving seed or grain from said conveyor hopper to said conveyor discharge; and	GPM 2000 and GPM 1997 teach conveyor 26 has first and second ends on page 7-1. GPM 2000 and GPM 1997 teach on page 7-1 the conveyor 26 has a hopper 43 at a first end and a discharge near the end proximate the number 26. GPM 2000 teaches that the conveyor is an auger type conveyor as known to those skilled in the art and as described on Page 7-2, it is motor driven.
a second coupling connecting said second end of said support arm with said conveyor at an approximate center of gravity of said conveyor, said second coupling defining a second vertical axis of rotation that is not parallel to said conveyor longitudinal axis, and said conveyor being rotatable in relation to said second end of said support arm about said second vertical axis of rotation between an unloading position	GPM 2000 on the cover page shows the auger in a stowed position alongside the hoppers. It also shows the auger on 6-1. Page 7-1 shows that it is pivotally connected in two places that would allow it to pivot into the positions called for in Claim 1 as would be known to one of basic skill in the art. GP 1997 teaches the same feature by explicitly

wherein said conveyor hopper is disposed below said main hopper discharge to receive agricultural product from said main hopper and a loading position wherein said conveyor discharge is disposed above said main hopper to dispense agricultural product into said main hopper,	stating the positions of the same which pertain to the same ADC2220 model shown in the GPM 2000.
wherein said conveyor is disposed parallel to and above said support arm in said unloading position; and	Arm A in FIG. 1 of the '814 patent is clearly positioned so that when the conveyor is under the hopper discharge B the conveyor is parallel with arm A.
a locking mechanism for locking and unlocking said support arm in relation to said base.	GPM 2000 teaches a locking mechanism being pin 46 and cotter pin 47 on Page 7-1.

21. Claim 21 of U.S. Patent 8,221,047 is unpatentable under 35 U.S.C. 103(a) as obvious over GP 1997, GPM 1997, GP 2000, or Convey-All 2002.

Claim 21. The seed or grain tender of claim 20, wherein said conveyor is disposed above said support arm in said unloading position.	GPM 2000 teaches one of ordinary skill in the art that this would necessarily be true due to the pivot points provided as shown on page 7-1. GP 1997 shows that the ADC2220 shown in GPM 2000 and GPM 1997 has the conveyor over the support arm in the lower middle photograph. Convey-All 2002 shows this configuration on Page 2.

22. Claim 22 of U.S. Patent 8,221,047 is unpatentable under 35 U.S.C. 103(a) as being obvious over GPM 2000, GP 1997, GPM 1997, or the '814 patent.

Claim 22. The seed or grain tender of claim 20, wherein said conveyor is rotatable in relation to said second coupling about a second horizontal axis of rotation.	GPM 2000 teaches one of ordinary skill in the art that this would necessarily be true due to the pivot points within part 18 (auger swivel support as named on page 7-2 and shown on page 7-1) the horizontal axis being about bolt 25. GPM 1997 shows the same thing. One of ordinary skill in the art would recognized the ADC2220 shown in GP 1997 has this feature due to the ability to load and unload, this is also corroborated by the GPM 1997 an GPM 2000 which describe in detail the ADC2220.

	The '814 patent shows horizontal pivot axis A in FIG 1 and 2.

23. Claim 23 of U.S. Patent 8,221,047 is unpatentable under 35 U.S.C. 103(a) as being obvious over GPM 2000 or GPM 1997.

Claim 23. The seed or grain tender of claim 22, wherein said second horizontal axis of rotation extends through said second coupling.	GPM 2000 shows the pivot points within part 18 (auger swivel support as named on page 7-2 and shown on page 7-1) which serves as the second coupler. Bolt 25 which serves as the axis extends through the coupler 18. The same is shown in GPM 1997.

24. Claim 24 of U.S. Patent 8,221,047 is unpatentable under 35 U.S.C. 103(a) as being obvious over GPM 2000 or GPM 1997.

Claim 24. The seed or grain tender of claim 20, further comprising a stand coupled with said first end of said conveyor and movable between a stowed position allowing said conveyor hopper to be positioned below said main hopper discharge when said conveyor is in said unloading position and an extended position supporting said conveyor hopper above the ground when said conveyor is in said loading position.	GPM 2000 shows a stand in the upper right corner near number 44 on which the auger rests when it is upon the ground.

25. Claim 25 of U.S. Patent 8,221,047 is unpatentable under 35 U.S.C. 103(a) as obvious over GPM 2000 or GPM 1997.

Claim 25. The seed or grain tender of claim 20, wherein said first vertical axis extends through said first end of said support arm.	GPM 2000 and GPM 1997 show the vertical axis being about the pivot spacer tube 12 in the first end of the arm 15 as shown on page 7-1.

26. Claim 26 of U.S. Patent 8,221,047 is unpatentable under 35 U.S.C. 103(a) as obvious over the GPM 2000 in view of '044; or the '814 patent in view of '044; or the '817 patent in view of GPM 2000.

Claim 26. The seed or grain tender of claim 20, wherein said first vertical axis extends through said base.	GPM 2000 shows the vertical axis being about the pivot spacer tube 12 in the first end of the arm 15 as shown on page 7-1. Also, the inner arm 20 pivots about shaft 21 as shown on page 7-1. The '044 patent shows a vertical axis about

	which the first axis of the arm pivots, as shown in FIGS. 1 and 2. The '814 patent shows arm A in FIGS. 1A and 2 and also shows the arm A being below the conveyor.

27. Claim 27 of U.S. Patent 8,221,047 is unpatentable under 35 U.S.C. 103(a) as obvious over GPM 2000 or GPM 1997.

Claim 27. The seed or grain tender of claim 20, wherein said second end of said support arm terminates at or near said approximate center of gravity of said conveyor.	GPM 2000 and GPM 1997 shows the auger swivel support 18 connected at the approximate center of gravity of the conveyor.

28. Claim 28 is unpantentable as obvious under 35 U.S.C. 103(a) over the GPM 2000 in view of the '044 patent.

Claim 28. The seed or grain tender of claim 20, wherein said first end of said support arm is fixed at a first height and said second end of said support arm is pivotable between a range of heights.	GPM 2000 shows the support arm 15 on page 7-1. The '044 patent shows a hydraulic cylinder 64 in FIG. 1 that may be used to raise and lower the arm 53.

29. Claim 29 is unpantentable as obvious under 35 U.S.C. 103(a) over the GPM 2000 in view of the '044 patent, or the '817 patent.

Claim 29. The seed or grain tender of claim 20, wherein said lift device is a pressurized cylinder.	GPM 2000 shows the support arm 15 on page 7-1. FIG. 2 of the '817 patent shows a hydraulic cylinder A. The '044 patent shows a hydraulic cylinder 64 in FIGS. 4 and 5.

30. Claim 30 is unpantentable as obvious under 35 U.S.C. 103(a) over the GPM 2000 in view of the '044 patent, or the '817 patent.

Claim 30. The seed or grain tender of claim 20, wherein said lift device is a hydraulic cylinder.	GPM 2000 shows the support arm 15 on page 7-1.

	FIG. 2 of the '817 patent shows a hydraulic cylinder A. The '044 patent shows a hydraulic cylinder 64 in FIGS. 4 and 5.

31. Claim 31 of U.S. Patent 8,221,047 is unpatentable as obvious under 35 U.S.C. 103(a) over the GPM 2000 or GPM 1997 in view of the '044 patent.

Claim 31. The seed or grain tender of claim 20, wherein said first coupling is a U-shaped member with a horizontal base portion and a pair of upright portions, and wherein said first horizontal axis extends through said upright portions of said first coupling.	GPM 2000 shows the support arm 15 on page 7-1 as does GPM 1997, base B is U-shaped. The '044 patent shows a pin and clevis U-shaped connection at the first end of arm 53 in FIG. 4 which is well known to those skilled in the art. The sides of this clevis being substantially vertical as would be necessary to raise and lower the arm 53 as shown in FIG. 4.

32. Claim 32 of U.S. Patent 8,221,047 is unpatentable under 35 U.S.C. 103(a) as obvious over Convey-All 2005 in view of GPM 2000 and the '044 patent.

Claim 32. The seed or grain tender of claim 20, wherein said locking mechanism includes a pin releasably engageable with one of a plurality of holes formed in said base.	GPM 2000 pages 7-1 and 7-2 dated 3/16/1998 show that pin 46 and cotter pin 47 may be used to lock the arms 15 and 20 due to pin 46 being inserted into at least one mating hole on the frame. Convey-All 2005 shows a spring pin P engaging a plurality of holes H to a rail welded to a fame below the hopper on Page 1.

33. Claim 33 is unpatentable under 35 U.S.C. 103(a) as obvious over Convey-All 2005.

Claim 33. The seed or grain tender of claim 32, wherein said pin is spring-biased toward said holes in said base.	Convey-All 2005 shows a spring pin P engaging a plurality of holes H to a rail welded to a fame below the hopper on page 1.

34. Claim 34 is unpatentable under 35 U.S.C. 103(a) as obvious over Convey-All 2005.

Claim 34. The seed or grain tender of claim 20, wherein said internal elevator includes a motor-driven belt.	Convey-All 2005 shows a belt type conveyor and it would be obvious to one skilled in the art that a belt type conveyor could be used in place of an auger conveyor or vice versa.

Respectfully submitted,

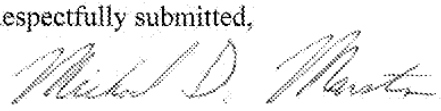

Michael D. Marston

EXHIBIT 1

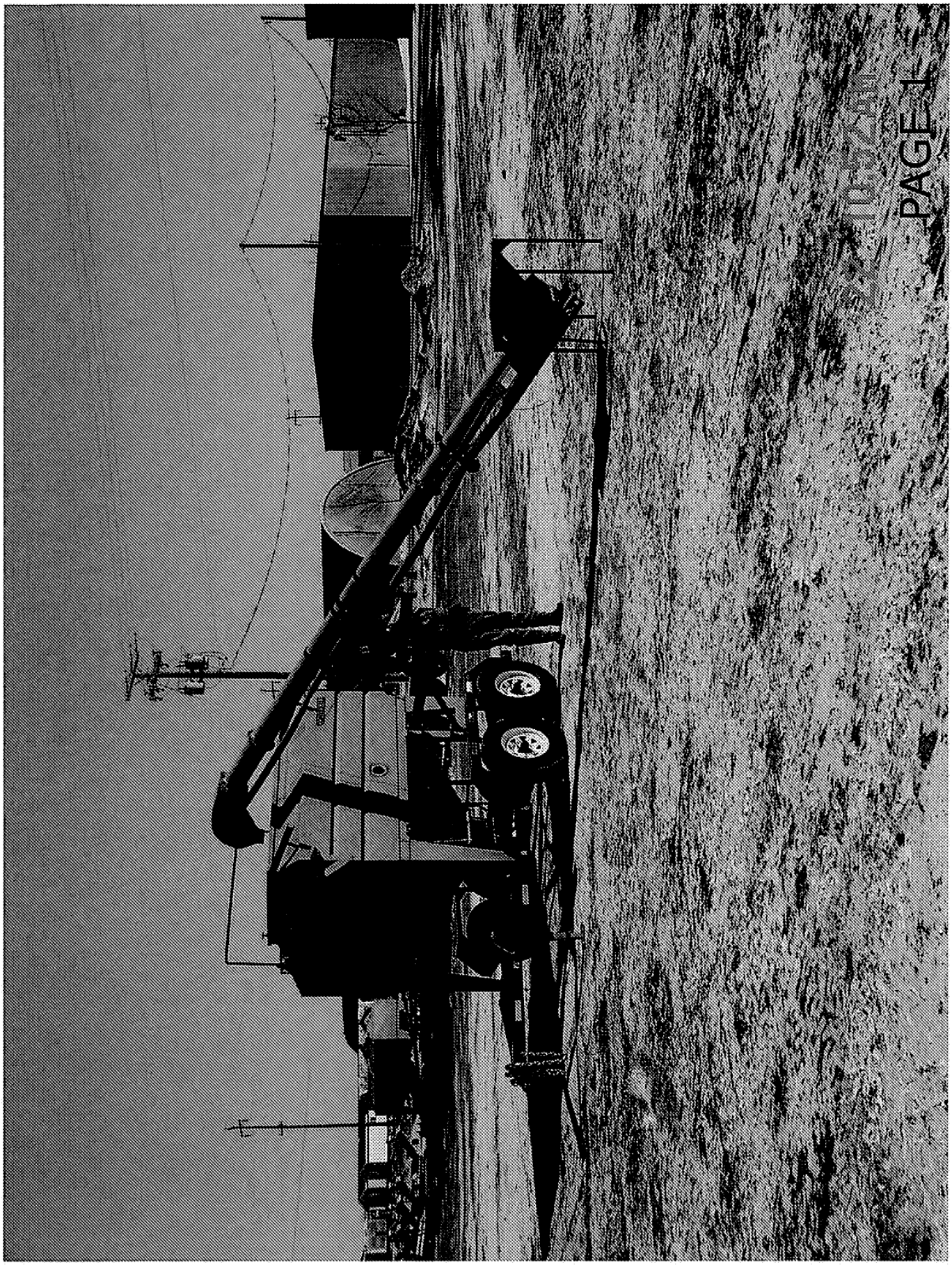

UM-PK0000835

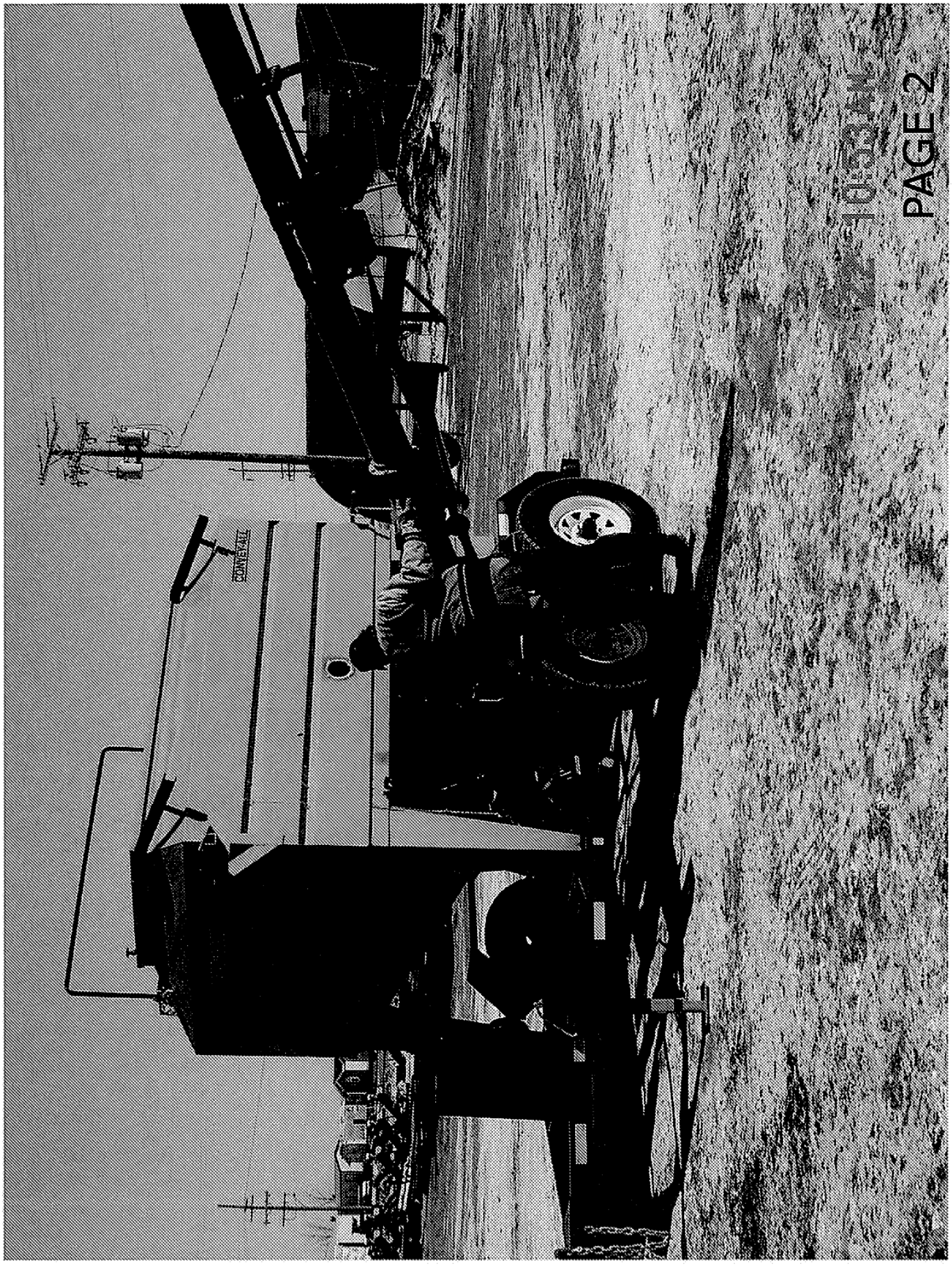

PAGE 2

UM-PK0000836

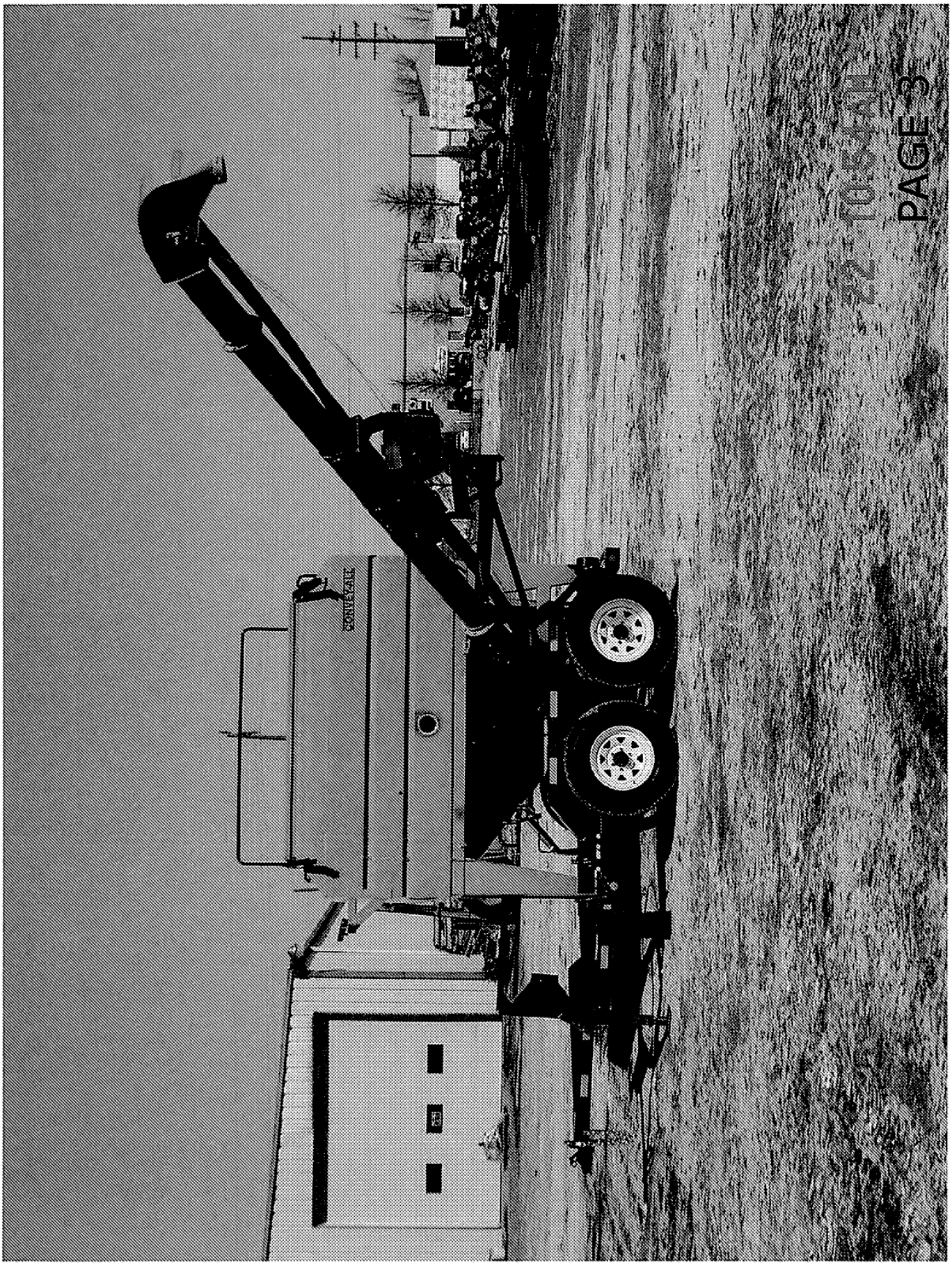
CONVEYOR

UM-PK0000838

EXHIBIT 2

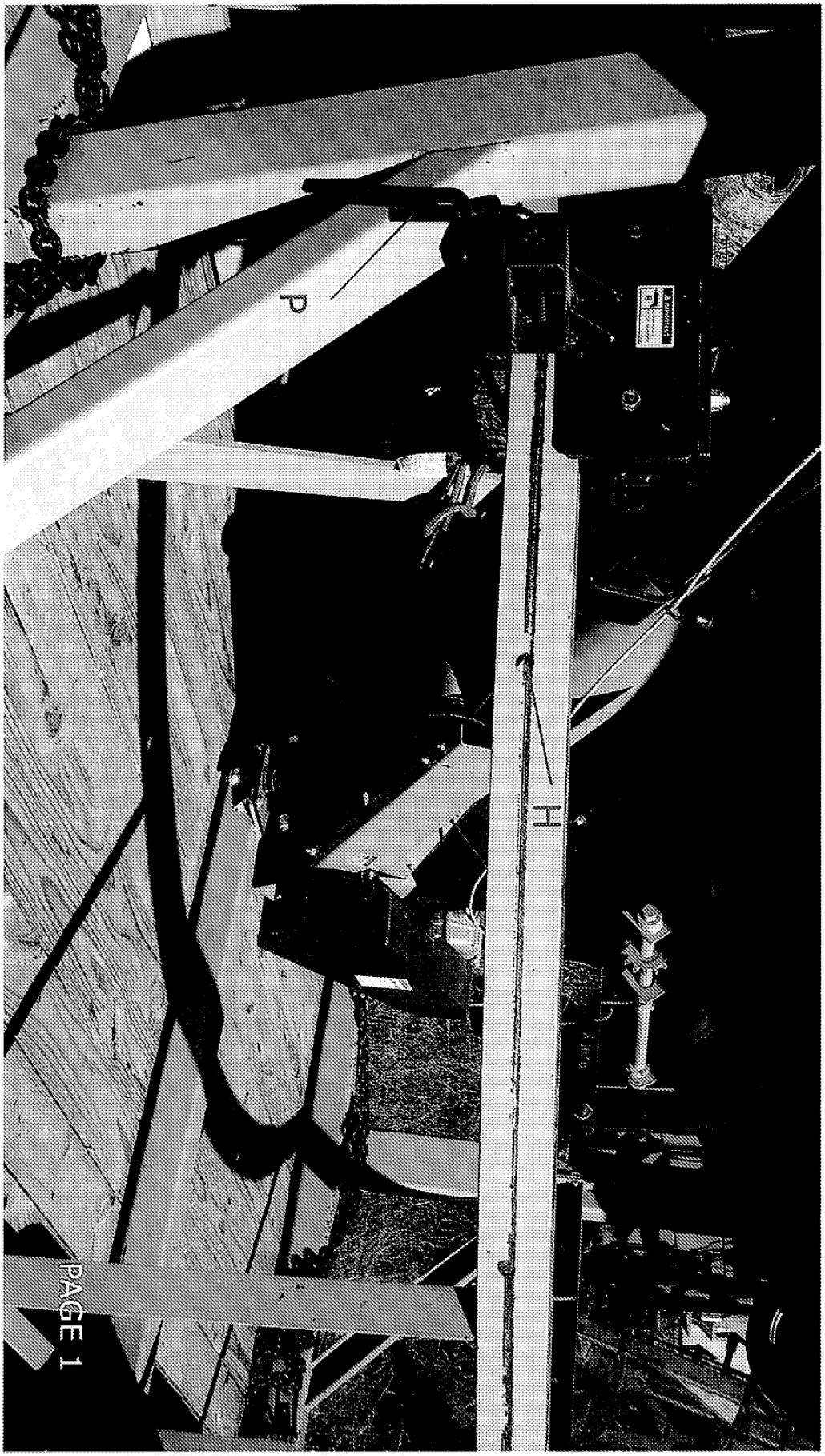

UM-PK0000840

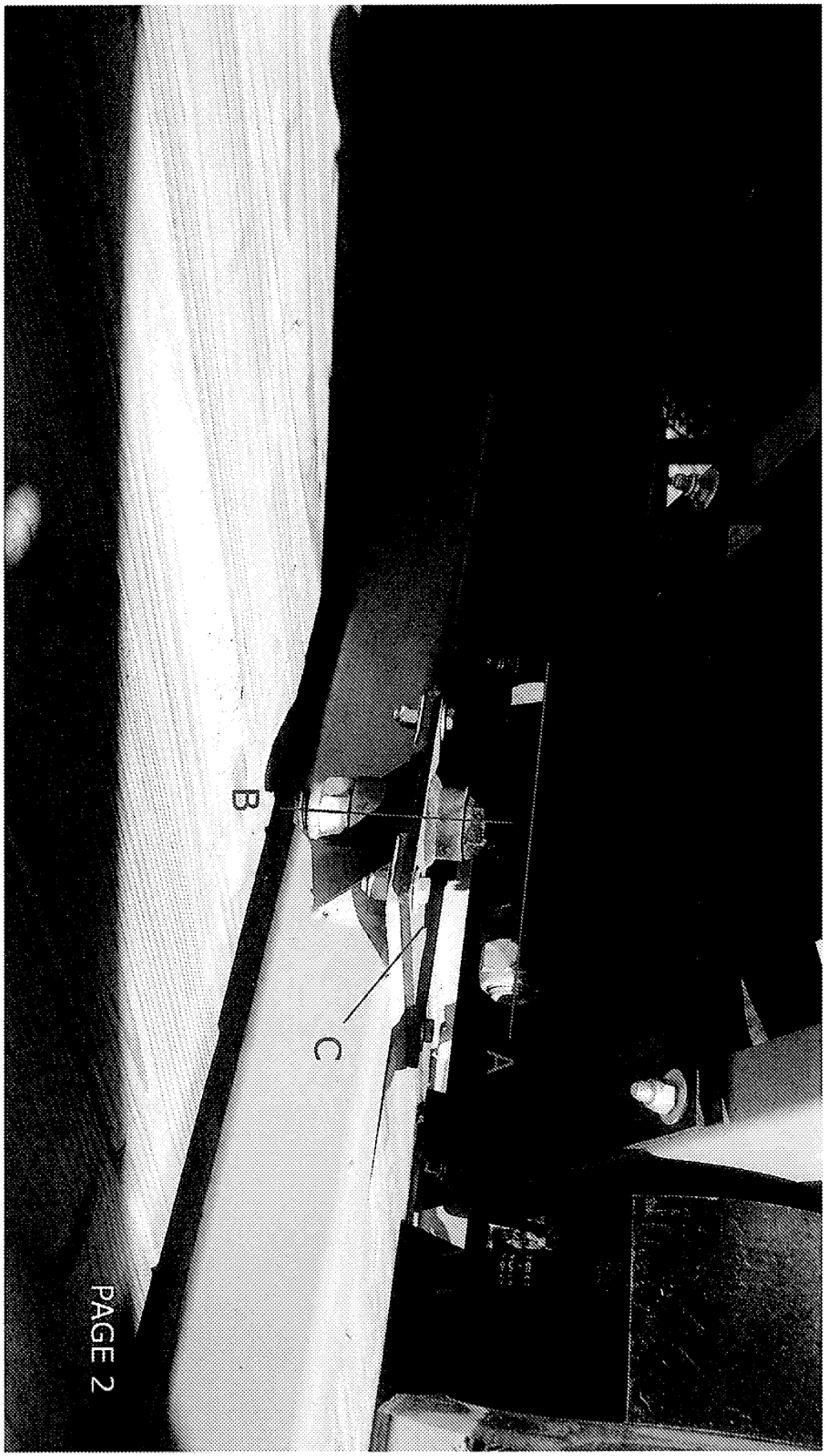

UM-PK0000841

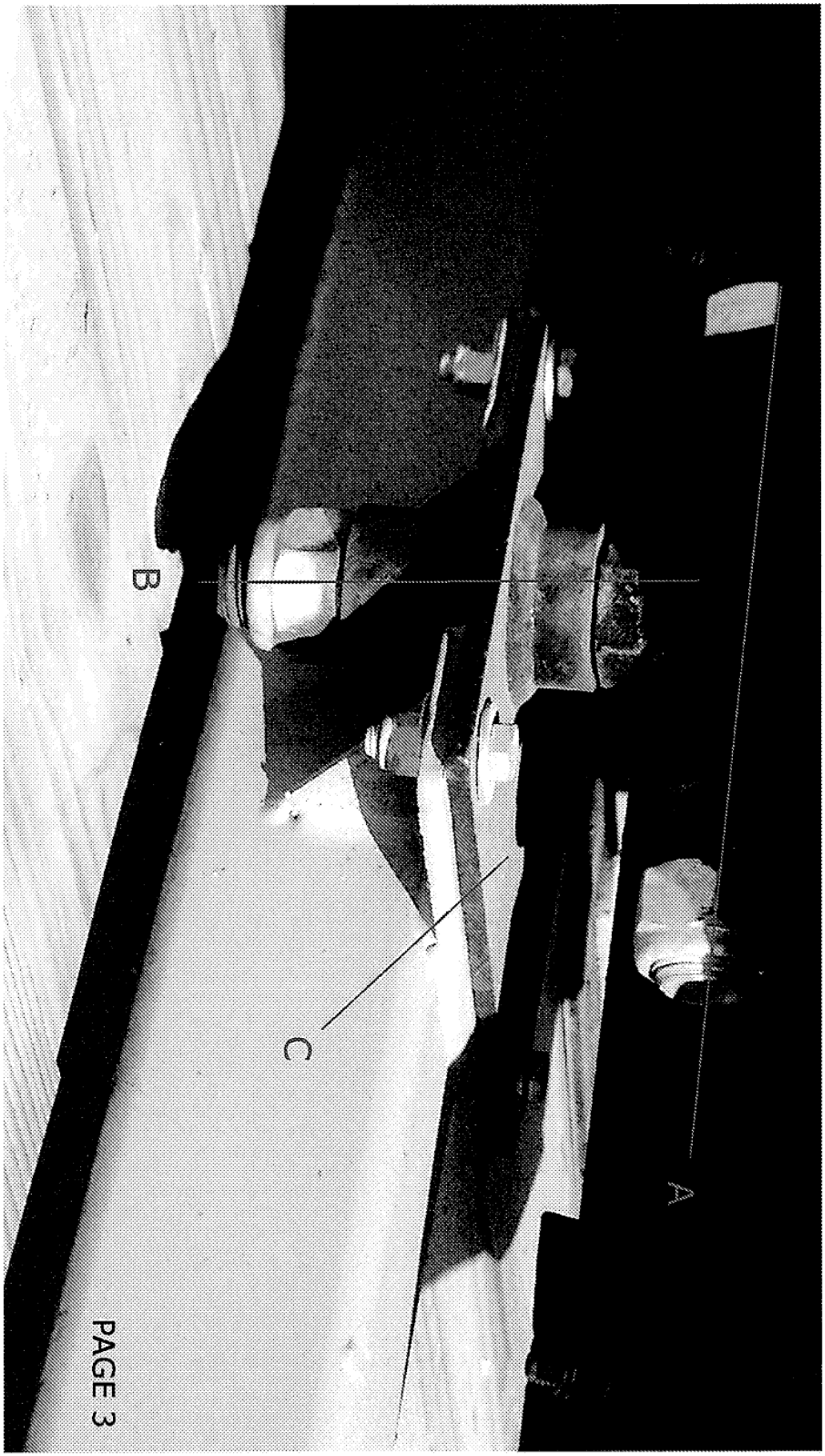

PAGE 3

UM-PK0000842

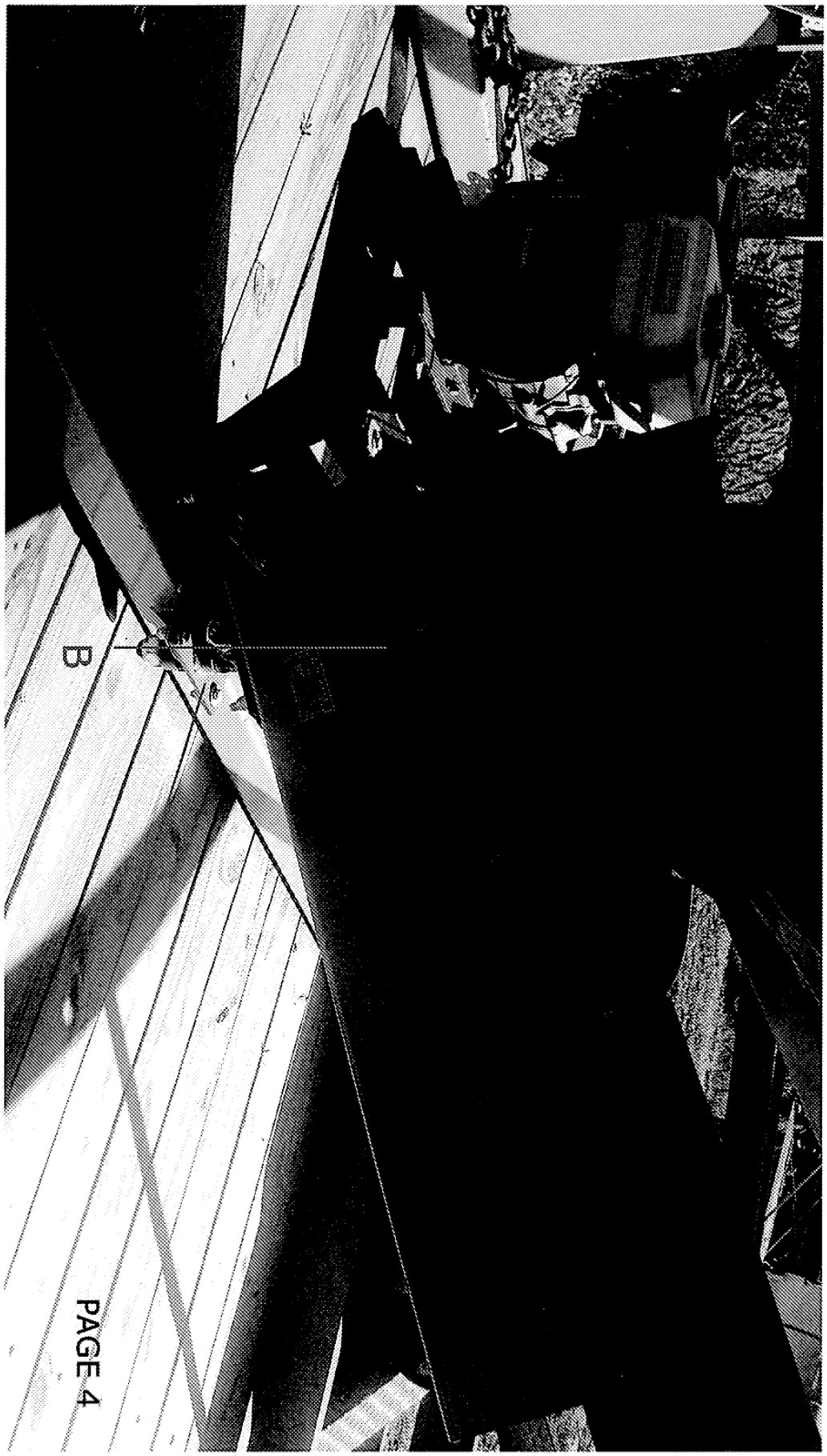

UM-PK0000843

EXHIBIT 3

AIR CART

from Great Plains

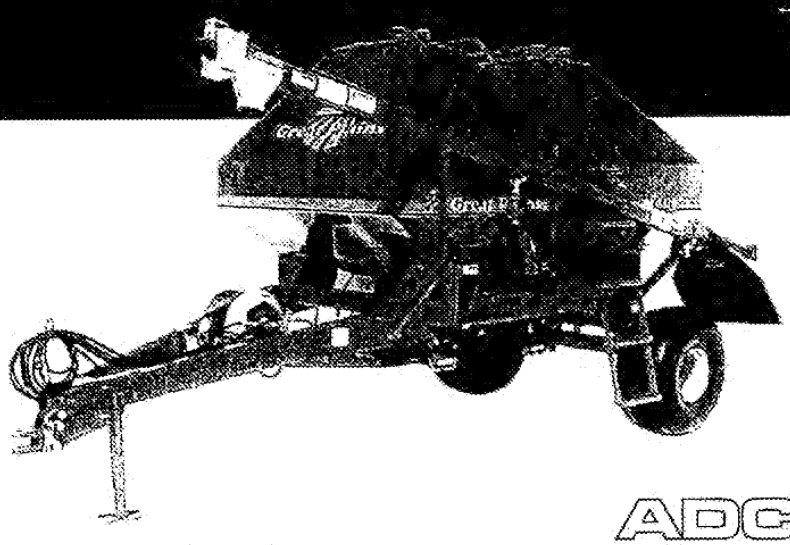

MODELS

ADC2220

The ADC2220 cart is designed as an economical high capacity bulk seeding alternative to conventional linear box drills. The ADC2220 is a pull-between cart designed to be semi-mounted to either HD, No-Till or Min-Till pull-behind Great Plains air implements.

METER

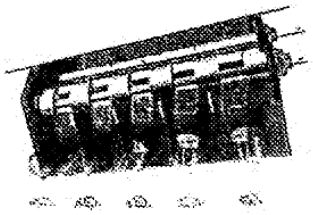

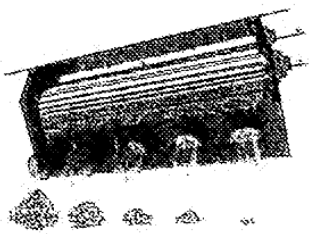

Competitive meters can cross-feed when on slopes (bottom image), starving "uphill" openers. Great Plains' meter box (top image) has one star wheel per tower, eliminating cross-feeding and increasing planting consistency.

AUGER

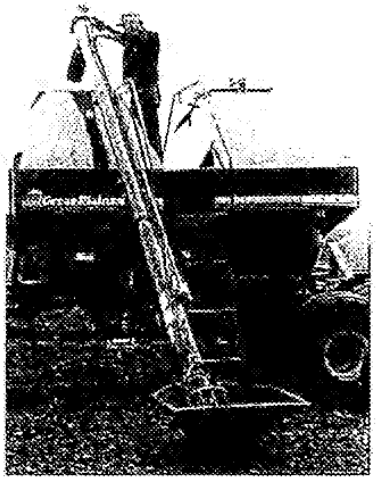

Dual purpose design allows you to load and unload with the same auger. It stores conveniently on the side of the cart and is balanced to allow easy handling..

IMPLEMENT

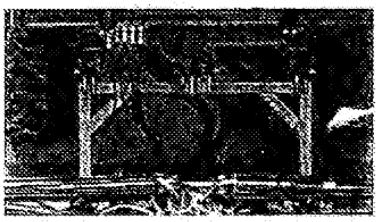

Our pull between Air Drill carts feature a semi-mounted cart-to-implement design. This design allows the implement to "Float" independent of the air cart and shortens the overall length on the air drill by up to 15'. This feature also give the cart and implement the ability to back into machine sheds and field corners.

Competitor | Great Plains

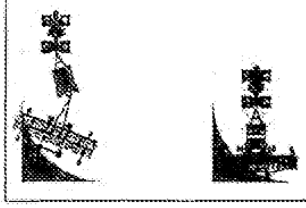

EXHIBIT 4

Auger

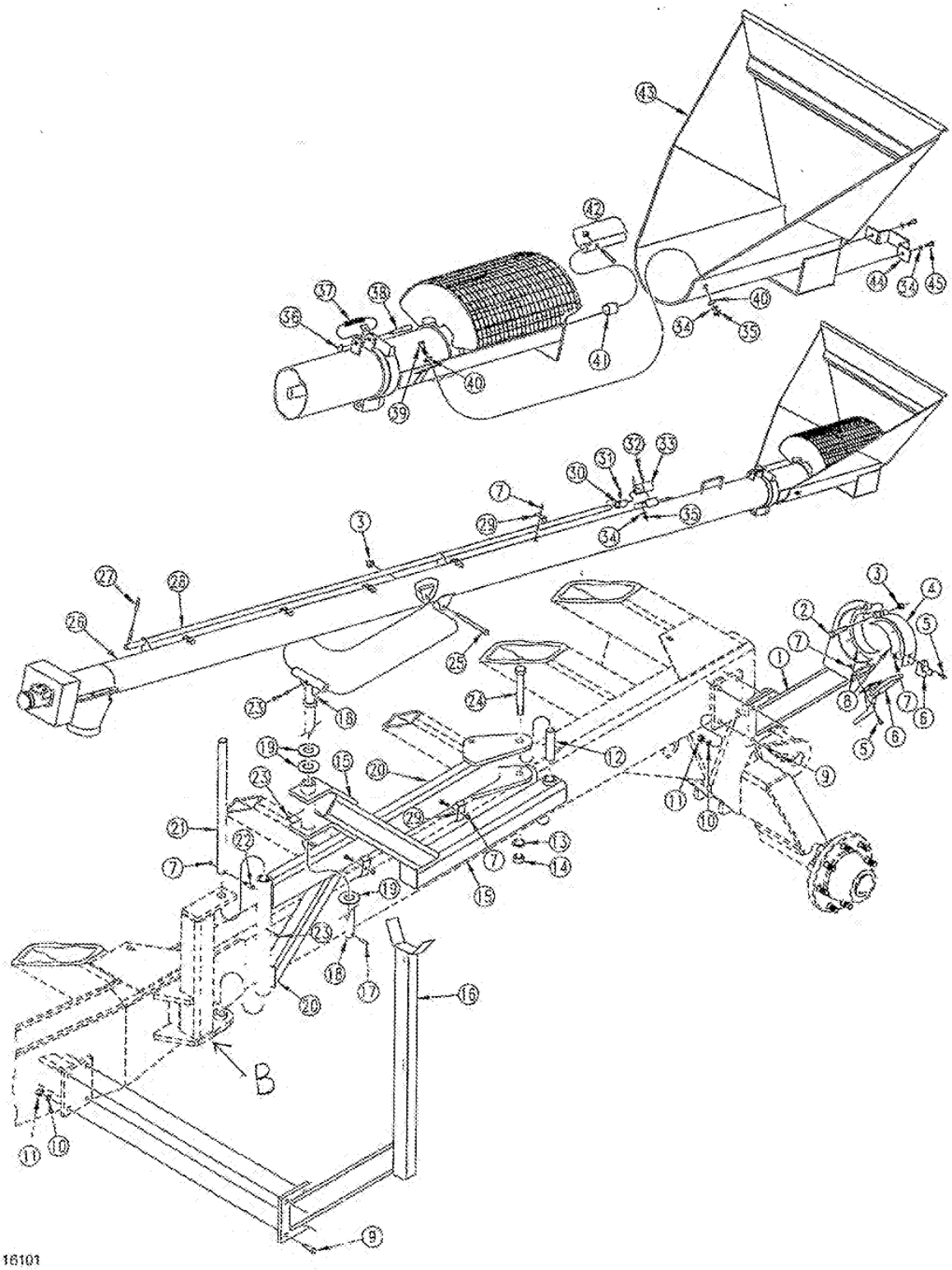

UM-PK0000847

EXHIBIT 5

(LIGHT BLUE)

Parts Manual

Model ADC2220
Air Drill Cart

Great Plains
Manufacturing, Inc.
P.O. Box 5060 • Salina, Kansas 67402-5060

Read the Operator's manual entirely. When you see this symbol, the subsequent instructions and warnings are serious - follow without exception. Your life and the lives of others depend on it!

Great Plains

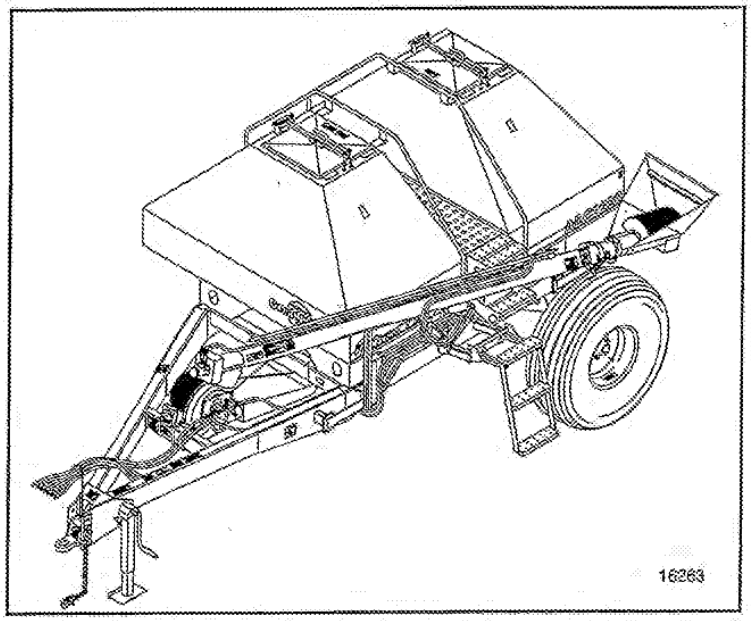

Cover illustration may show optional equipment not supplied with standard unit.

© Copyright 2000 Printed 3/1/2000
3)GREAT PLAINS/AIR DRILLS/AIR DRILL CARTS

167-073P
Rev. A

UM-PK0000849

Table of Contents

Section 1 Introduction 1-1
- **General Information** 1-1
- Revisions 1-1
- Touch-up Paint and Manual Information 1-1
- Replacement Hardware 1-1
- Part Number Service Coding 1-2
- Part Number Index 1-3

Section 2 Frame and Bins 2-1
- Hitch and Frame Assembly 2-1
- Rotating Square Jack (116-065K) (S/N Y1000-Y1009) 2-3
- Bulter Jack Assembly (890-610C) (S/N Y1010+) 2-5
- Left and Right Hubs 2-7
- Hub and Wheel 2-9
- Bin Assembly 2-11
- Bin to Frame 2-13
- Step and Handrail 2-15

Section 3 Metering System 3-1
- Meterbox 3-1

Section 4 Fan and Air System 4-1
- Fan and Transition 4-1

Section 5 Drives 5-1
- Drive Wheel to Electric Clutch 5-1
- Electric Clutch to Gearbox Drive 5-3
- Gearbox to Meter Box Drive 5-5
- Vansco Monitor/Harness 5-7
- Gearbox Levers 5-9
- Front Gearbox (S/N Y1000-Y1062) 5-11
- Front Gearbox (S/N Y1063+) 5-13
- Rear Gearbox (S/N Y1000-Y1062) 5-15
- Rear Gearbox (S/N Y1063+) 5-17

Section 6 Hydraulic System 6-1
- Hydraulic System 6-1
- Fan Hydraulic System (S/N Y1077-) 6-3
- Fan Hydraulic System (S/N Y1078+) 6-5
- Double Selector Valve (810-274C) 6-7
- Valve 4Way 3Pos Op Cen Dir (810-268C) 6-9
- NTA35 Control Valve (S/N Y1077-) 6-11
- Pressure Reducing Valve (810-349C) 6-13
- Relief Valve (810-348C) 6-15

Section 7 Auger 7-1
- Auger 7-1
- Auger Hydraulic Drive 7-3

Section 8 Decals 8-1
- Decal Placement 8-1

© Copyright 2000 All Rights Reserved

Great Plains Manufacturing, Inc. provides this publication "as is" without warranty of any kind, either expressed or implied. While every precaution has been taken in the preparation of this manual, Great Plains Manufacturing, Inc. assumes no responsibility for errors or omissions. Neither is any liability assumed for damages resulting from the use of the information contained herein. Great Plains Manufacturing, Inc. reserves the right to revise and improve its products as it sees fit. This publication describes the state of this product at the time of its publication, and may not reflect the product in the future. The illustrations in this manual are not intended for safe and proper assembly or disassembly of equipment. The illustrations are intended for ordering parts only.

Great Plains Manufacturing, Incorporated Trademarks
The following are trademarks of Great Plains Mfg., Inc.: Application Systems, Ausherman, Land Pride, Great Plains
All other brands and product names are trademarks or registered trademarks of their respective holders.
Printed in the United States of America.

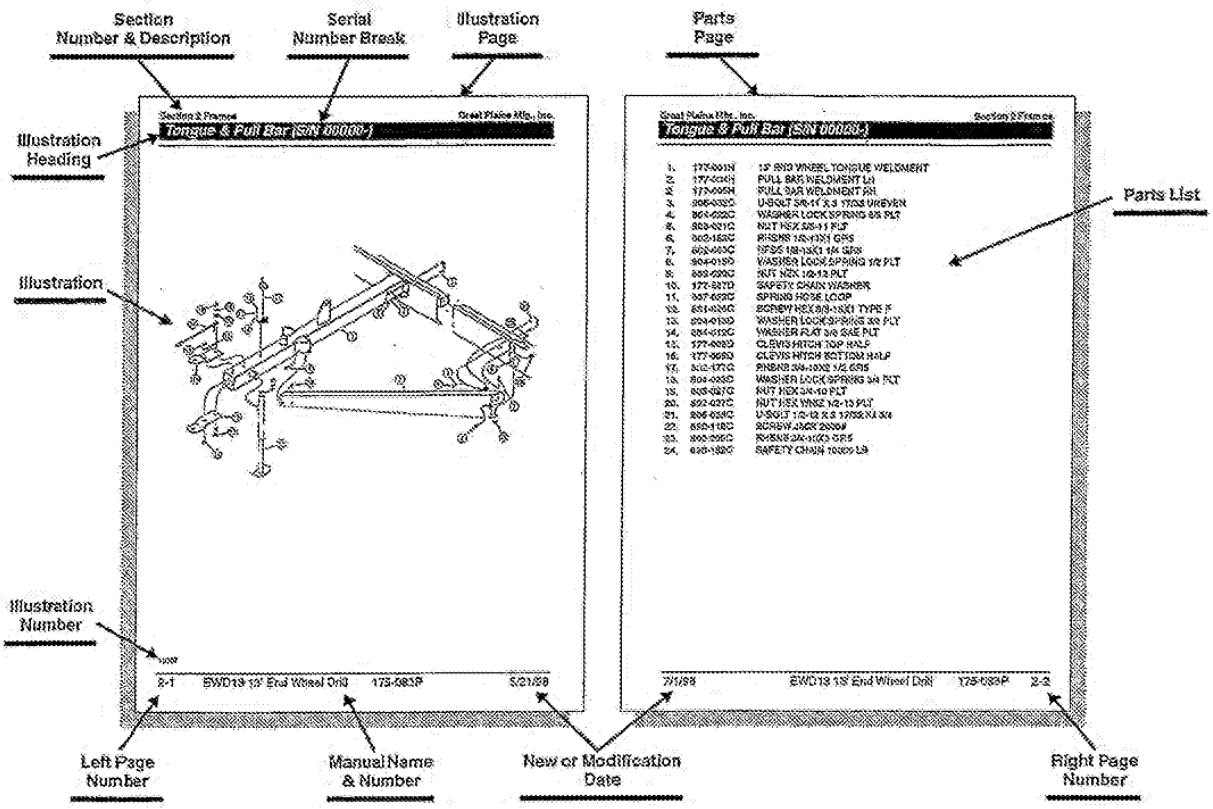

General Information

Revisions

Please refer to the date at the bottom of each page for the most current version of the equipment. Serial number breaks are at the top of the page at the end of the illustration heading, refer to the illustration above.

Touch-up Paint and Manual Information

Repaint parts where paint is worn or scratched to prevent rust. Aerosol touch-up paint is available. To order use Great Plains part numbers below:

GP Green 821-001C
GP Black. 821-002C
GP Beige. 821-003C
GP Buckskin 821-004C
LP Beige 821-011C
LP Black 821-032C

Replacement manuals available. Use Great Plains part 167-073P.

Replacement Hardware

All bolts and nuts are grade 5 unless otherwise noted. The use of improper grades of hardware can result in personal injury, damage to equipment, or loss of property. See **"Hardware Legend"** on page 1-2, for hardware abbreviations used within all parts lists.

UM-PK0000851

Hardware Legend

AR	As Required
BLADE	Blade Bolt
C	Cap Screw
CP	Cotter Pin
CPHSSS	Cup Point Hex Socket Set Screw
CPSHSS	Cup Point Square Head Set Screw
CPSOHSS	Cup Point Square Head Set Screw
CRFCHMS	Cross Recess Flat Countersunk Head Mach. Screw
CRPHMS	Cross Recess Pan Head Machine Screw
CRPHTFS	Cross Recess Pan Head Thread Forming
CRRHMS	Cross Recess Round Head Machine Screw
CRTHMS	Cross Recess Truss Head Machine Screw
CSNB	Countersunk Square Neck Bolt
FHMS	Flat Head Machine Screw
FTC	Full Thread Cap Screw
H	Hex Nut
HCLN	Hex Center Lock Nut
HFLCS	Hex Flange Lock Cap Screw
HFS	Hex Flange Screw
HFSLN	Hex Flange Serrated Lock Nut
HFSS	Hex Flange Serrated Screw
HHCS	Hex Head Cap Screw or Metric Bolt
HSBHCS	Hex Socket Button Head Cap Screw
HSFCHCS	Hex Socket Flat Countersunk Head Cap Screw
HSHCS	Hex Socket Head Cap Screw
HSSS	Hex Socket Head Screw
HTLN	Hex Top Lock Nut
HWHCS	Hex Washer Head Cap Screw
HWHMS	Hex Washer Head Machine Screw
HXBHCS	Hex Socket Button Head Cap Screw
J	Hex Jam Nut
JIC	37 Degree Tapered Thread
L	Helical Spring Lock Washer
LUG	Lug Bolt
NFC	National Fine Cap Screw
NPSM	National Pipe Straight Mechanical
NPTF	National Pipe Taper Fuel
P	Wide Plain Washer
PHMS	Pan Head Machine Screw
PLOW	Plow Bolt
RHMS	Round Head Machine Screw
RHSNB	Round Head Square Neck Bolt
SCREW LEVELING	Leveling Screw
SCREW THUMB	Thumb Screw
SCREW WELD	Weld Screw
SFCHMS	Slotted Flat Countersunk Head Machine Screw
SFHMS	Slotted Fillister Head Machine Screw
SP	Special
SP SCREW	Special Screw
SQHSS	Square Head Set Screw
SRHMS	Slotted Round Head Machine Screw
SSS	Socket Set Screw
STCS	Self Tapping Cap Screw
STHMS	Slotted Truss Head Machine Screw
WHEEL	Wheel Studs and Hub Long Bolts
WING	Wing Bolt

Part Number Service Coding

Within the following parts lists some part numbers are coded for revisions and interchangeability.

Legend:

Newest serial numbers are listed first.

Bold face type indicates parts that are serviced. These parts are considered interchangeable, if it supersedes another part, unless otherwise noted.

Example:

(S/N 20001+)	Includes serial numbers 20001 and above (to the newest numbers)
(S/N 10001↔20000)	Includes serial numbers between and including 10001 and 20000
(S/N 10000-)	Includes serial numbers10000 and below (to the oldest number)

❶ First revision, e.g.; ❷ is 2nd revision, ❸ is 3rd revision, etc.
(Greater numbers are the newest.)

● The existing stock for this part should be used up before ordering the new part.

⊗ Not interchangeable

⊗①❸ Revision 2 is not interchangeable w/1

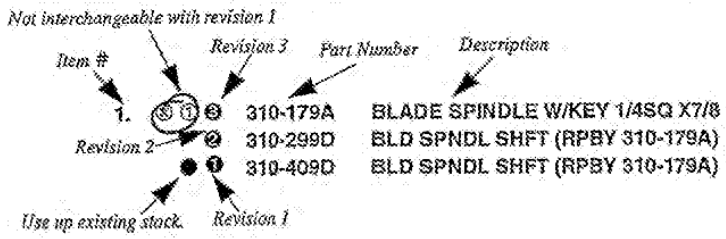

Part Number Index

Part Number	Page
10-50057	2-6
10-50058	2-6
10-70020	2-6
10-80012	2-6
10-80028	2-6
10-80054	2-6
10-80147	2-6
20-20028	2-6
1078	6-10
1079	6-8
1084	6-8
1284	6-10
1285	6-10
1285	6-8
5070	6-14
5075	6-14
5089	6-14
5108	6-14
17089	4-2
20002	4-2
21121	4-2
23318	4-2
23320	4-2
41478	7-4
84008	7-4
835128	7-4
1004175	7-4
1008493	7-4
1008495	7-4
30102322	6-18
85020105	6-16
10084XX	7-2
107-112D	3-2
1088-210	6-10
1088-210	6-8
1089-210	6-10
1089-210	6-8
119-164D	7-2
1132-4	6-10
116-037H	2-4
116-038H	2-4
116-042H	2-4
116-056D	2-4
116-061H	2-4
116-062D	2-4
116-064D	2-4
116-065D	2-4
116-065K	2-2
116-068D	2-4
116-069D	2-4
116-066D	2-4
119-032D	2-16
119-155D	2-16
161-131D	5-2
161-131D	5-6
166-064H	2-16
166-105H	2-2
166-106H	5-4
166-107H	5-10
166-108H	7-2
166-109H	7-2
166-110H	7-2
166-113H	7-2
166-114H	5-4
166-117H	2-16
166-118H	2-16
166-119H	4-2
166-120H	2-16
166-123H	7-2
166-124H	7-2
166-125H	7-2
166-126H	7-2
166-293D	7-2
166-300D	7-2
166-405D	7-2
166-413D	7-2
166-451D	5-10
166-463D	7-2
166-479D	2-8
166-512D	7-2
167-035H	2-12
167-044H	2-12
167-049H	2-12
167-049H	2-12
167-050H	2-12
167-051H	2-12
167-054H	2-12
167-055L	2-14
167-063H	2-12
167-067L	2-14
167-089A	3-12
167-112D	2-12
167-171D	6-12
167-172D	2-12
167-173D	2-12
167-096H	2-12
167-099H	2-12
168-034D	4-2
168-123D	5-2
168-141D	4-2
168-155H	5-12
168-156H	5-16
168-157H	5-12
168-157H	5-16
168-158H	5-12
168-158H	5-18
168-164H	5-12
168-164H	5-16
168-180H	4-2
168-183D	3-2
168-185H	3-2
168-187D	5-12
168-187D	5-16
168-187K	2-12
168-188D	5-12
168-188D	5-16
168-188S	3-2
168-189H	3-2
168-190H	3-2
168-191H	5-6
168-192H	5-6
168-193H	5-12
168-194H	5-16
168-195H	5-12
168-196H	5-16
168-205H	4-2
168-208D	5-12
168-208D	5-16
168-209D	5-12
168-209D	5-16
168-212D	5-12
168-212D	5-16
168-213D	5-12
168-213D	5-16
168-240D	5-2
168-243D	3-2
168-245H	5-10
168-246H	5-10
168-247H	5-12
168-247H	5-16
168-251D	3-2
168-269D	3-2
168-275D	5-2
168-276D	5-4
168-276D	7-4
168-283D	5-12
168-283D	5-16
168-295H	3-2
168-300D	5-12
168-300D	5-16
168-308D	5-2
168-328D	3-2
168-354D	5-4
168-355D	5-2
168-358D	5-10
168-363D	4-2
168-364D	4-2
168-157H	5-14
168-157H	5-18
168-164H	5-14
168-164H	5-18
168-188H	3-2
168-187D	5-14
168-187D	5-18
168-188D	5-14
168-188D	5-16
168-208D	5-14
168-208D	5-16
168-212D	5-14
168-212D	5-18
168-213D	5-14
168-213D	5-18
168-247H	5-14
168-247H	5-18
168-248K	5-4
168-249K	5-4
168-268H	5-18
168-269H	5-14
168-270H	5-14
168-270H	5-18
168-274H	5-14
168-274H	5-16
168-277K	2-12
168-278S	3-2
168-283D	5-14
168-283D	5-18
168-300D	5-14
168-300D	5-18
168-378D	5-18
168-378D	5-14
170-033H	2-2
170-034H	2-2
170-058H	2-2
181-151C	5-2
188-009V	3-2
194-070D	2-2
204-221D	5-10
2H-200GP	2-6
2H-30080	2-6
2H-30081	2-6
2H-300GP	2-6
3148A91	7-4
3198A1	7-4
6318C	7-4
6382C	7-4
6514A1	7-4
800-001C	7-2
800-034C	4-2
800-042C	2-4
800-046C	2-4
800-051C	5-10
800-051C	7-2
800-060C	5-8
800-064C	4-2
800-066C	5-12
800-066C	5-16
800-088C	5-12
800-088C	5-16
800-179C	3-2
800-180C	4-2
800-285C	7-2
800-015C	2-4
800-021C	5-14
800-021C	5-18
800-035C	2-12
800-041C	2-16
800-044C	6-2
800-046C	2-6
800-066C	5-14
800-066C	5-18
800-067C	4-2
800-088C	5-14
800-088C	5-18
801-002C	4-2
801-002C	4-2
801-003C	2-12
801-023C	5-12
801-023C	5-18
801-035C	5-2
801-052C	2-4
801-067C	3-2
801-067C	4-2
801-067C	5-2
801-081C	4-2
801-003C	5-14
801-003C	5-18
801-052C	2-6
801-104C	9-2
801-151C	3-2
802-004C	5-12
802-004C	5-16
802-004C	7-4
802-007C	2-16
802-007C	7-2
802-010C	2-16
802-010C	5-10
802-010C	5-2
802-010C	5-4
802-010C	7-2
802-013C	5-10
802-014C	3-2
802-014C	7-4
802-017C	2-16
802-017C	5-12
802-017C	5-16
802-017C	5-4
802-024C	7-4
802-029C	5-12
802-029C	5-16
802-047C	7-2
802-058C	5-6
802-059C	5-2
802-070C	7-2
802-076C	2-12
802-076C	3-2
802-079C	5-12
802-079C	5-16
802-082C	7-2
802-087C	5-12

UM-PK0000853

Unverferth Ex. 2025 - Page 36

Part Number Index

Part Number	Page
802-087C	5-16
802-091C	2-14
802-092C	7-4
802-115C	7-2
802-159C	2-12
802-159C	2-16
802-159C	5-2
802-159C	7-2
802-166C	2-2
802-167C	3-2
802-172C	7-2
802-182C	2-8
802-226C	2-12
802-226C	2-2
802-226C	7-2
802-258C	7-4
802-289C	2-12
802-303C	2-8
802-317C	2-2
802-318C	5-2
802-375C	4-2
802-390C	2-12
802-479C	7-4
802-551C	6-12
802-004C	5-14
802-004C	5-18
802-024C	6-2
802-029C	5-14
802-029C	5-18
802-069C	2-8
802-079C	5-14
802-079C	5-18
802-087C	5-14
802-087C	5-18
802-802C	2-16
803-001C	2-12
803-006C	2-12
803-006C	3-2
803-006C	5-12
803-006C	5-16
803-006C	6-12
803-006C	7-4
803-008C	2-16
803-008C	5-10
803-008C	5-2
803-008C	5-4
803-008C	7-2
803-008C	7-4
803-011C	2-12
803-011C	2-16
803-011C	5-10
803-011C	7-2
803-013C	2-12
803-014C	2-12
803-014C	2-16
803-014C	3-2
803-014C	4-2
803-014C	5-12
803-014C	5-16
803-014C	5-2
803-014C	5-4
803-015C	5-12
803-015C	5-16
803-019C	7-2
803-020C	2-14
803-020C	2-2
803-020C	4-2
803-020C	6-12
803-020C	7-2
803-021C	5-2
803-021C	5-6
803-027C	7-2
803-030C	5-12
803-030C	5-16
803-034C	2-2
803-064C	2-12
803-064C	3-2
803-064C	4-2
803-064C	5-2
803-078C	7-4
803-084C	7-4
803-095C	2-8
803-147C	2-12
803-147C	7-4
803-219C	2-10
803-219C	2-8
803-230C	4-2
803-001C	5-14
803-001C	5-18
803-006C	5-14
803-006C	5-18
803-014C	5-14
803-014C	5-18
803-014C	6-2
803-015C	5-14
803-015C	5-18
803-026C	2-8
803-030C	5-14
803-030C	5-18
804-003C	3-2
804-004C	2-12
804-006C	2-12
804-006C	5-12
804-006C	5-16
804-006C	6-12
804-006C	7-4
804-007C	3-2
804-007C	6-12
804-007C	7-4
804-009C	2-16
804-009C	5-12
804-009C	5-16
804-009C	5-2
804-009C	5-4
804-009C	7-2
804-009C	7-4
804-010C	5-2
804-010C	5-4
804-012C	2-12
804-012C	2-16
804-012C	4-2
804-012C	5-4
804-013C	2-16
804-013C	3-2
804-013C	4-2
804-013C	5-12
804-013C	5-16
804-013C	5-4
804-013C	7-4
804-014C	5-12
804-014C	5-16
804-015C	2-14
804-015C	2-2
804-015C	4-2
804-015C	6-12
804-015C	7-2
804-017C	2-14
804-017C	2-2
804-021C	5-2
804-021C	5-6
804-022C	5-2
804-022C	5-6
804-023C	7-2
804-025C	5-10
804-028C	2-8
804-029C	7-2
804-030C	2-2
804-036C	2-12
804-036C	2-16
804-036C	5-10
804-036C	7-2
804-043C	2-12
804-043C	3-2
804-043C	4-2
804-043C	5-2
804-088C	2-12
804-088C	3-2
804-088C	4-2
804-088C	5-2
804-135C	2-12
804-135C	2-16
804-136C	2-12
804-006C	5-14
804-006C	5-18
804-009C	5-14
804-009C	5-18
804-013C	5-14
804-013C	5-18
804-013C	6-2
804-014C	5-14
804-014C	5-18
804-054C	5-14
804-054C	5-18
804-131C	4-2
805-023C	5-10
805-032C	5-10
805-050C	2-8
805-081C	2-2
805-158C	3-2
805-158C	5-6
805-168C	2-12
805-168C	5-12
805-168C	5-16
805-189C	7-2
805-249C	7-2
805-022C	5-14
805-022C	5-18
805-032C	7-2
805-169C	5-14
805-169C	5-18
805-252C	7-2
806-067C	4-2
806-067C	6-12
808-077C	2-12
807-031C	7-2
807-041C	5-12
807-041C	5-18
807-073C	2-2
807-123C	5-10
807-041C	5-14
807-041C	5-18
807-175C	5-14
807-175C	5-18
808-048C	5-2
808-048C	5-6
808-062C	5-2
808-082C	5-4
808-125C	5-2
808-191C	5-4
808-192C	3-2
808-237C	5-2
808-064C	5-4
808-159C	5-2
809-009C	5-6
809-065C	5-4
809-188C	5-2
809-189C	5-2
809-190C	5-4
809-191C	5-6
809-192C	5-2
810-037C	6-4
810-267C	7-4
810-268C	6-10
810-268C	7-2
810-273C	4-2
810-274C	6-8
810-345C	6-12
810-347C	6-12
810-348C	6-12
810-349C	6-12
810-037C	6-6
810-268C	6-2
810-273C	6-4
810-273C	6-6
810-274C	6-2
810-345C	6-6
811-063C	6-12
811-065C	6-12
811-077C	6-4
811-078C	6-12
811-079C	6-12
811-080C	6-12
811-150C	6-12
811-150C	6-4
811-169C	6-12
811-170C	6-12
811-195C	6-4
811-282C	6-12
811-416C	6-12
811-502C	6-4
811-503C	6-4
811-516C	6-4
811-562C	6-12
811-627C	6-12
811-678C	6-12
811-679C	6-4
811-680C	6-12
811-680C	6-4
811-063C	6-2
811-073C	6-6
811-077C	6-6
811-077C	6-8
811-078C	6-4
811-088C	6-12
811-088C	6-2
811-147C	6-6
811-150C	6-2
811-150C	6-6
811-192C	6-2
811-195C	6-6
811-204C	6-2
811-324C	6-2
811-324C	6-6
811-466C	6-2
811-502C	6-6
811-503C	6-6
811-515C	6-6
811-516C	6-6
811-548C	6-2
811-548C	6-6

UM-PK0000854

Unverferth Ex. 2025 - Page 37

Part Number Index

Part Number	Page
811-649C	6-2
811-650C	6-2
811-651C	6-2
811-652C	6-2
811-653C	6-2
811-666C	6-2
811-681C	6-2
814-155C	2-10
814-156C	2-10
815-075C	2-8
815-076C	2-8
815-074C	2-8
816-013C	2-12
816-035C	2-10
816-053C	5-12
816-053C	5-16
816-166C	5-12
816-166C	5-16
816-199C	3-2
816-201C	3-2
816-203C	7-2
816-053C	5-14
816-053C	5-18
816-166C	5-14
816-166C	5-18
816-301C	2-12
817-007C	2-12
817-018C	3-2
817-056C	5-10
817-131C	2-16
817-205C	3-2
817-207C	3-2
817-255C	6-10
817-255C	6-8
817-355C	7-2
817-342C	5-14
817-342C	5-18
817-344C	4-2
818-003C	8-2
818-188C	8-2
818-189C	6-2
818-229C	8-2
818-230C	8-2
818-339C	6-2
818-557C	8-2
818-560C	8-2
818-594C	8-2
818-595C	8-2
818-597C	8-2
818-598C	8-2
818-620C	8-2
818-622C	8-2
818-623C	8-2
818-625C	8-2
818-627C	8-2
818-628C	8-2
818-630C	8-2
818-632C	8-2
818-633C	8-2
818-634C	8-2
818-635C	8-2
818-651C	8-2
818-653C	8-2
818-654C	8-2
818-667C	8-2
818-720C	8-2
818-772C	8-2
818-773C	8-2
818-774C	8-2
818-776C	8-2
818-789C	8-2
818-814C	8-2
818-795C	8-2
818-865C	8-2
818-882C	8-2
822-048C	2-8
822-055C	2-4
822-069C	5-12
822-069C	5-16
822-070C	5-12
822-070C	5-16
822-073C	5-2
822-073C	5-4
822-074C	5-12
822-074C	5-16
822-106C	2-8
822-107C	2-8
822-115C	2-8
822-069C	5-14
822-069C	5-18
822-070C	5-14
822-070C	5-18
822-074C	5-14
822-074C	5-18
823-074C	5-2
823-083C	5-4
823-089C	6-6
823-187C	5-8
830-276C	4-2
838-041C	8-2
838-042C	8-2
838-160C	8-2
838-188C	8-2
838-212C	8-2
838-228C	8-2
890-277C	2-8
890-353C	5-12
890-353C	5-16
890-395C	4-2
890-396C	4-2
890-398C	2-2
890-417C	7-2
890-437C	5-2
890-471C	4-2
890-472C	4-2
890-610C	2-2
890-659C	5-14
890-659C	5-18
890-466C	3-2
890-624C	4-2
890-633C	2-12
990-024R	5-12
990-024R	5-16
990-024R	5-14
990-024R	5-18
CP2-10	6-14
P602122	2-8
P758400-8	2-8
P758401-8	2-8
PRPIL-10-K-25	6-14
VA-111002-2	5-2
VA-111004-2	3-2
VA-278000	3-2
VA-278001	5-2
VA-294000	2-12
VA-490001	5-8
VA-490002	5-8
VA-490700	5-8
VA-490701	5-8
VA-490702	5-8
VA-291000	4-2
VA-291003	4-2

UM-PK0000855
Unverferth Ex. 2025 - Page 38

Hitch and Frame Assembly

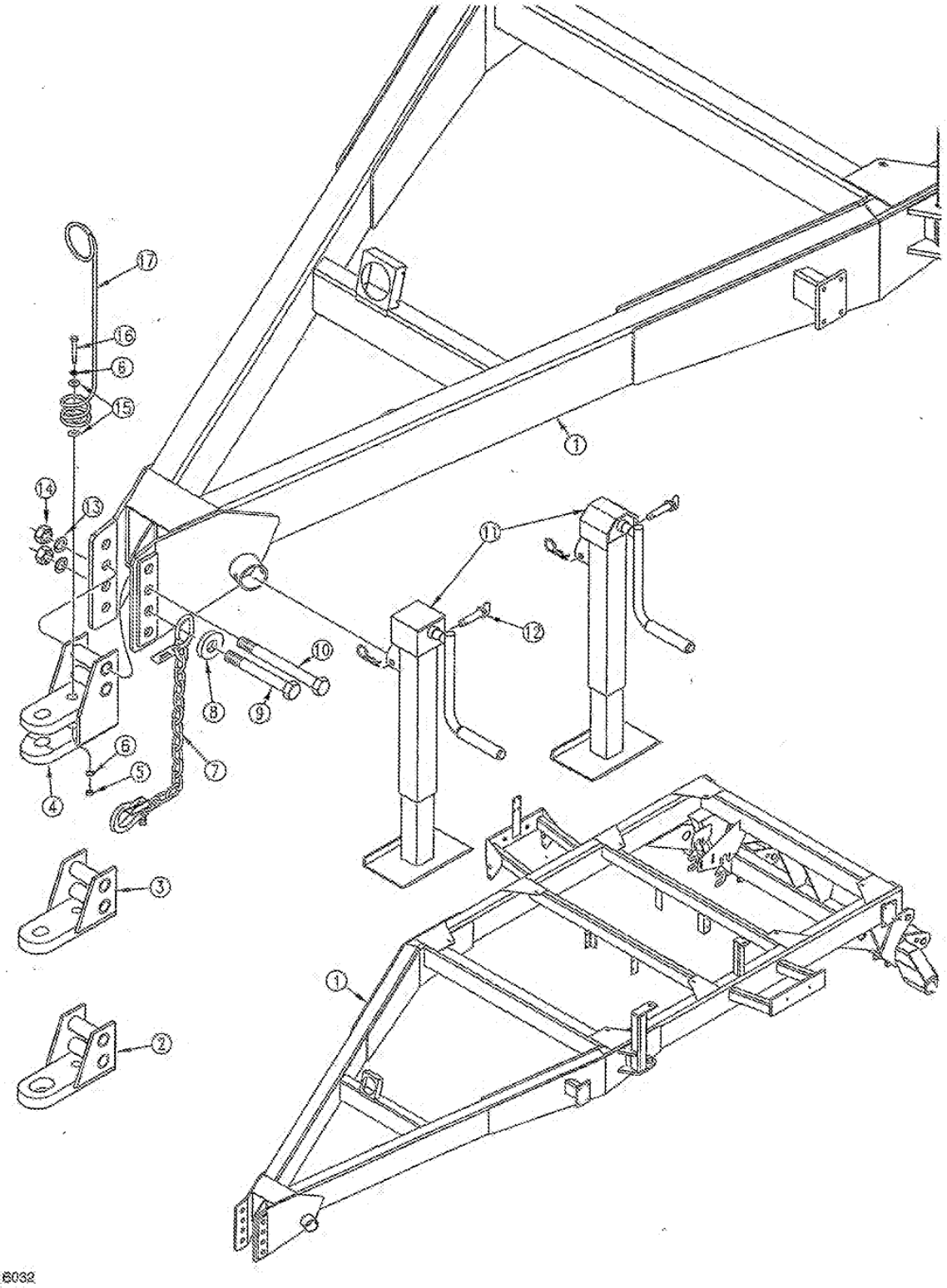

Hitch and Frame Assembly

Ref.	Part No.	Part Description	Comments
1.	166-105H	2220 CART FRAME WELDMENT	
2.	170-033H	SINGLE HITCH STRAP-LARGE	
3.	170-034H	SINGLE HITCH STRAP-SMALL	
4.	170-058H	FOLDING DRILL CLEVIS HITCH	
5.	803-020C	NUT HEX 1/2-13 PLT	
6.	804-015C	WASHER LOCK SPRING 1/2 PLT	
7.	890-398C	SAFETY CHAIN 40000 LB	
8.	194-070D	SAFETY CHAIN WASHER	
9.	802-166C	HHCS 1 1/4-7X9 1/2 GR5 SPTHD	
10.	802-317C	HHCS 1 1/4-7X11 GR5 SPTHD	
11.	❷ 890-610C	SQ TB JACK 10000 LB 10 STROKE	(S/N Y1010→) Refer to page 2-6 for breakdown.
	❶ 116-065K	JACK REPLACED BY 890-610C	(S/N Y1000↔Y1009) Refer to page 2-4 for breakdown.
12.	805-081C	PIN HITCH 3/4 X 4 3/8	
13.	804-030C	WASHER LOCK 1 1/4 SPRING PLT	
14.	803-034C	NUT HEX 1 1/4-7 PLT	
15.	804-017C	WASHER FLAT 1/2 USS PLT	
16.	802-226C	HHCS 1/2-13X2 3/4 GR5	
17.	807-073C	SPRING HOSE LOOP HEAVY	

Legend: ❶ = 1st revision; ❷ = 2nd revision; ❸ = 3rd revision; ✱ = use up existing stock; ⊘ = not interchangeable; ⊘ ❶ ❷ = for example: revision 2 is not interchangeable w/revision 1

Rotating Square Jack (116-065K S/N Y1000-Y1009)

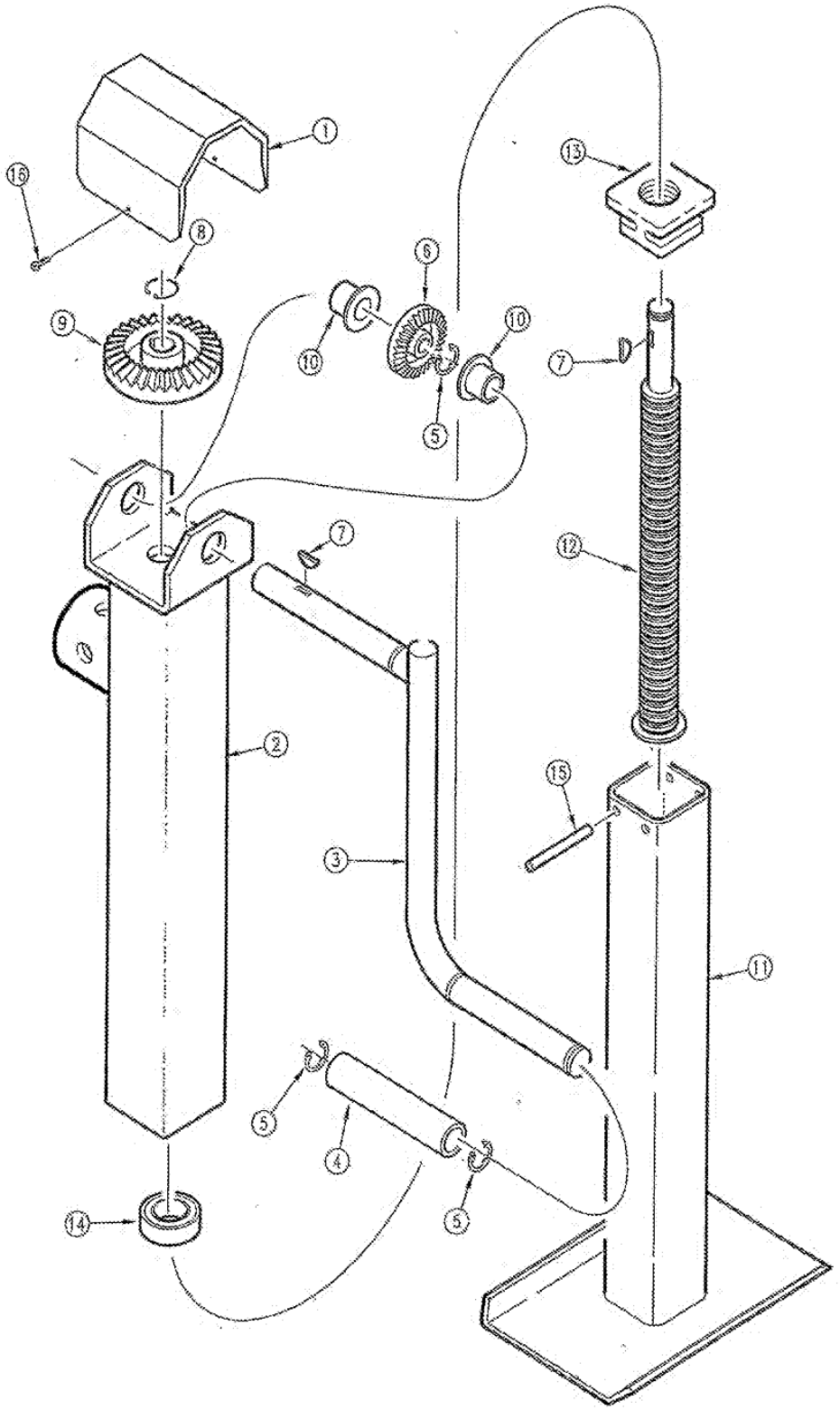

UM-PK0000858

Rotating Square Jack (116-0[illegible]K) (S/N Y1000-Y1009)

Ref.	Part No.	Part Description	Comments
1.	116-069D	JACK LID	
2.	116-061H	ROTATING JACK HOUSING	
3.	116-042H	ROTATING JACK CRANK HANDLE	
4.	116-068D	JACK CRANK HAND GRIP	
5.	800-042C	EXTERNAL E RING 3/4 I.D.	
6.	116-065D	BEVEL GEAR 15T 7 PITCH 26.6 PA	
7.	800-046C	WOODRUFF KEY #606	
8.	800-015C	SNAP RING EXT .750 .078 T	
9.	116-064D	BEVEL GEAR 30T 7 PITCH 63.4 PA	
10.	116-066D	JACK CRANK BUSHING	
11.	116-037H	JACK LEG WITH FOOT	
12.	116-038H	JACK SCREW WITH STOP	
13.	116-055D	JACK NUT	
14.	822-055C	BANDED THRUST BRG 3/4 I.D.	
15.	116-062D	JACK NUT PIN	
16.	801-052C	SCR P.H. 8X3/8 TYPEB THD FORM	

Legend: ❶ = 1st revision; ❷ = 2nd revision; ❸ = 3rd revision; ✱ = use up existing stock; ⊗ = not interchangeable; ❷ ❶ ❸ = for example: revision 2 is not interchangeable w/revision 1

Bulter Jack Assembly (890-6100 S/N Y1010+)

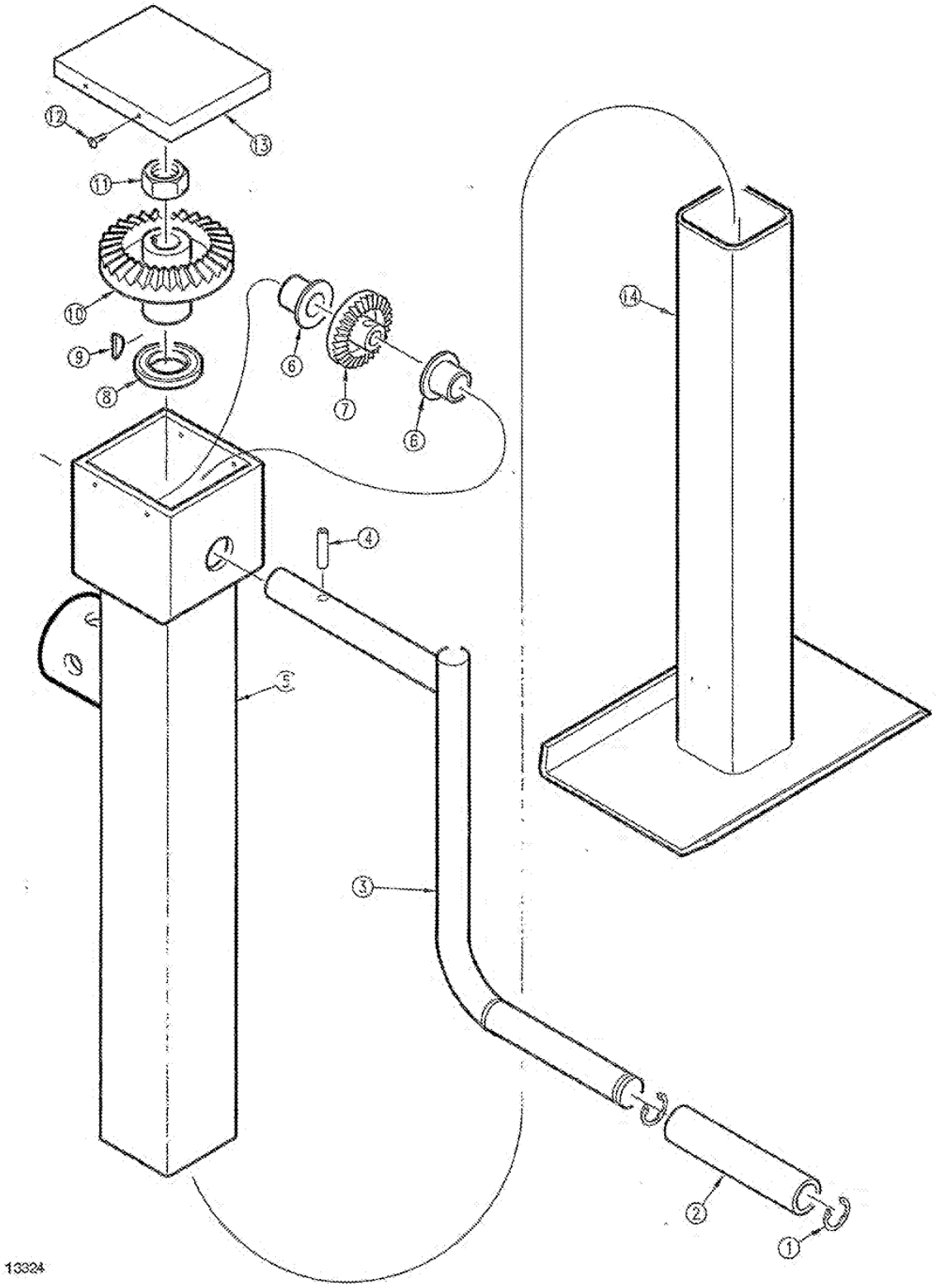

UM-PK0000860

Bulter Jack Assembly (890-6[illegible]) (S/N Y1010+)

Ref.	Part No.	Part Description	Comments
1.	10-80054	BUTLER GRIP CLIP	
2.	2H-30081	BUTLER PVC GRIP	
3.	2H-30080	BUTLER CRANK ASSEMBLY	
4.	10-80147	BUTLER GROOVE PIN	
5.	2H-200GP	BUTLER GEAR BOX	
6.	10-70020	BUTLER BUSHING	
7.	10-50058	BUTLER PINION GEAR	
8.	10-80012	BUTLER THRUST BEARING	
9.	800-046C	WOODRUFF KEY #606	
10.	10-50057	BUTLER BEVEL GEAR	
11.	10-80028	NUT HEX 7/8-14 LOCK	
12.	801-052C	SCR P.H. 8X3/8 TYPEB THD FORM	
13.	20-20028	BUTLER COVER	
14.	2H-300GP	BUTLER INNER LEG ASSEMBLY	

Legend: ❶ = 1st revision; ❷ = 2nd revision; ❸ = 3rd revision; ● = use up existing stock; ⊗ = not interchangeable; ⊗ ❶ ❷ = for example: revision 2 is not interchangeable w/revision 1

Left and Right Hubs

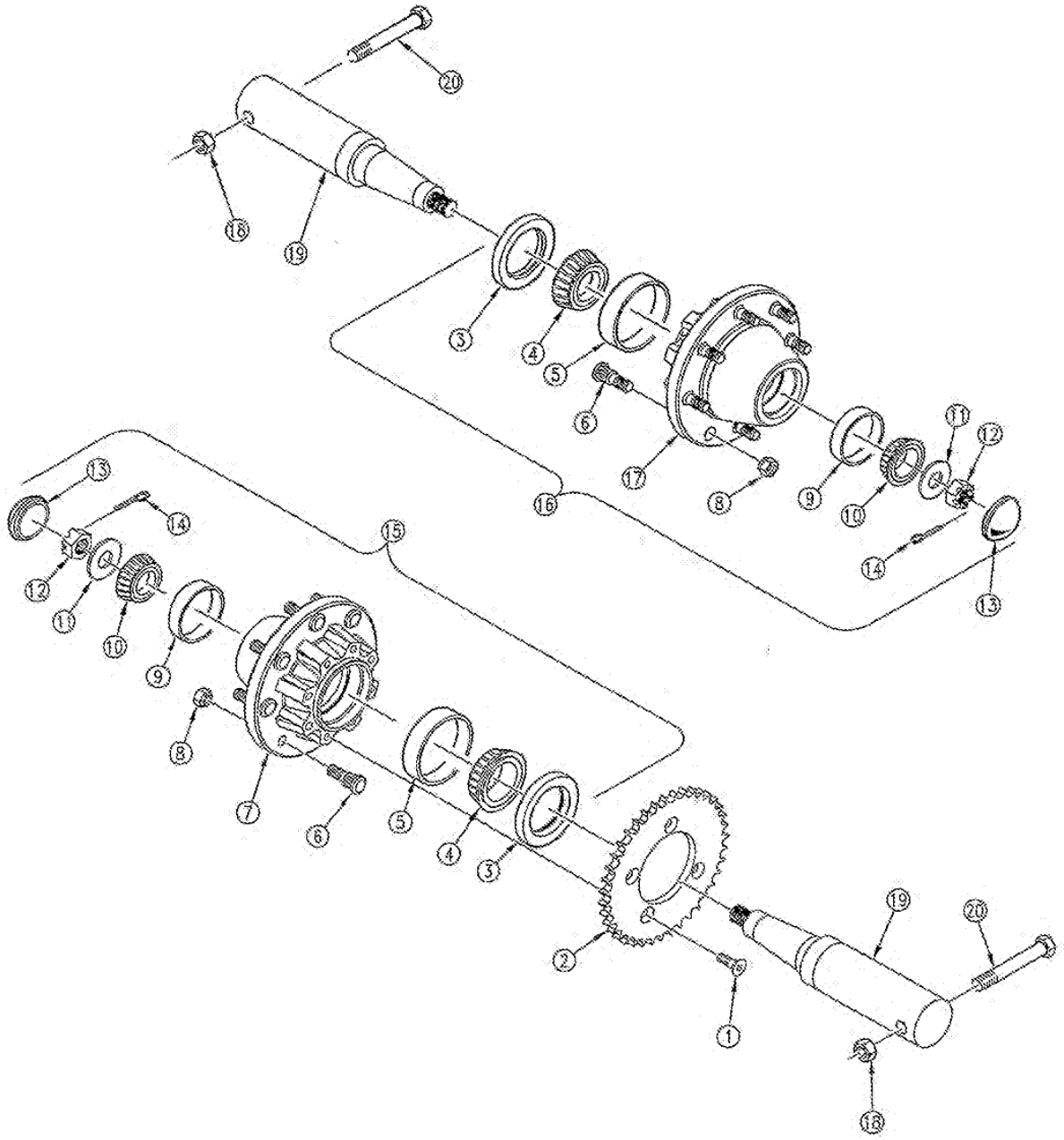

16094

UM-PK0000862

Left and Right Hubs

Ref.	Part No.	Part Description	Comments
1.	802-303C	HSFCHCS 1/2-20X1 1/4 BLK	
2.	186-479D	SPROCKET, 2220 MAIN DRIVE	
3.	P602122	ARMSTRONG SEAL 815-075C, -076C	
4.	822-106C	BEARING CONE 2.25 ID 387	
5.	822-107C	BEARING CUP 2.25 ID 382A	
6.	802-182C	HUB STUD 5/8-18X2 3/8 GR5	
7.	P758401-8	ARMSTRONG DRIVE HUB 815-076C	
8.	803-219C	NUT LUG 5/8-18 X 90 DEG PLT	
9.	822-115C	BEARING CUP LM501310	
10.	822-048C	BEARING CONE #LM 501349	
11.	804-028C	WASHER FLAT 1 USS	
12.	803-095C	NUT HEX SLOTTED 1-14	
13.	890-277C	GREASE CAP 3.125 X .38	
14.	805-060C	PIN COTTER 7/32 X 2	
15.	815-076C	HUB ASS'Y 8 BOLT W/BRAKE HOLES	
16.	815-075C	HUB ASSEMBLY 8 BOLT 6 PILOT	
17.	P758400-8	ARMSTRONG HUB MACH. 815-075C	
18.	803-026C	NUT LOCK 3/4-10 PLT	S/N Y1063+.
19.	815-074C	SPNDL ASS'Y 220 BU CART FRAME	S/N Y1063+.
20.	802-069C	HHCS 3/4-10X5 GR5	S/N Y1063+.

Legend: ❶ = 1st revision; ❷ = 2nd revision; ❸ = 3rd revision; ● = use up existing stock; ⊗ = not interchangeable; ⊗ ❶ ❷ = *for example: revision 2 is not interchangeable w/revision 1*

Hub and Wheel

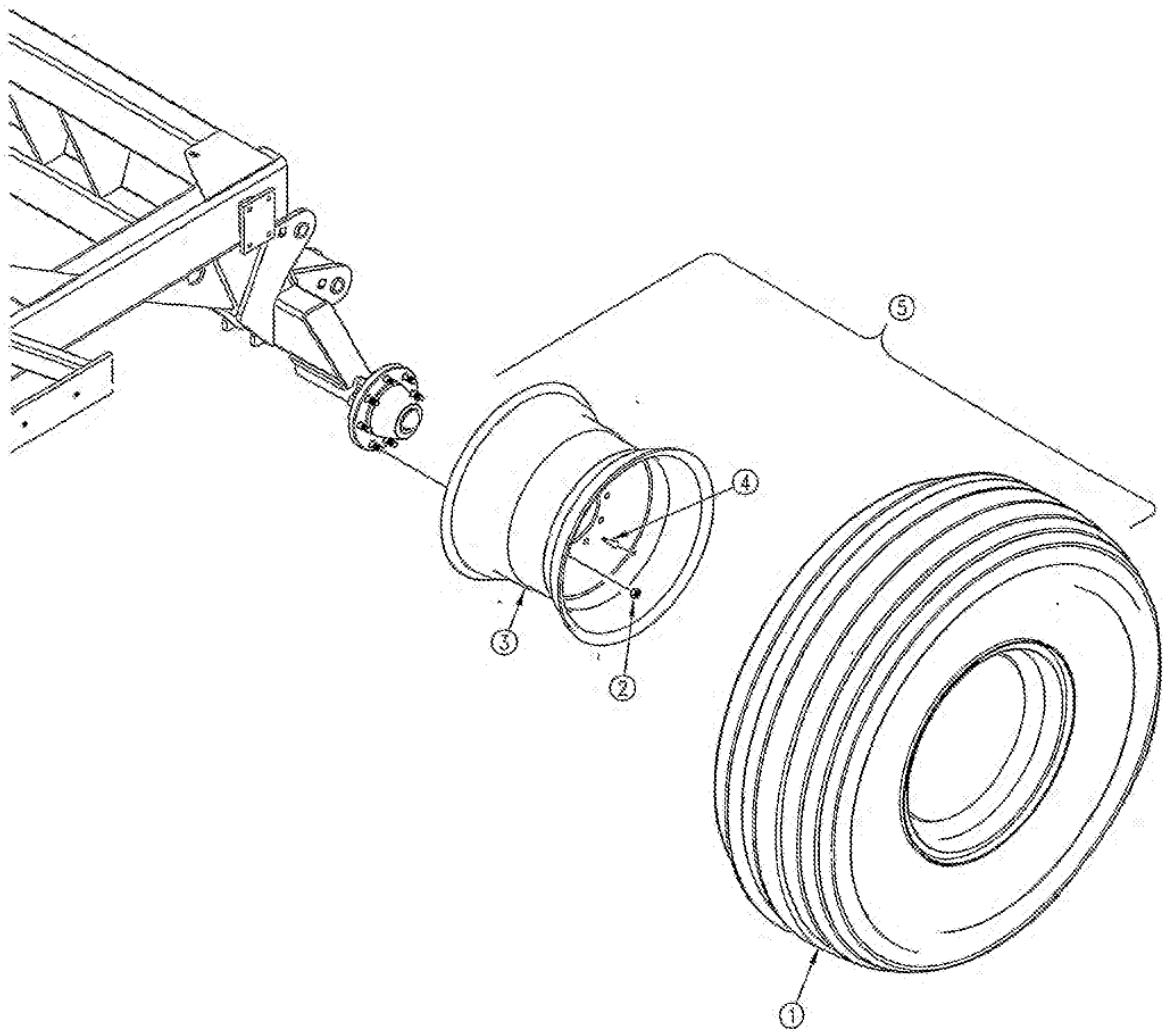

16038

UM-PK0000864
Unverferth Ex. 2025 - Page 47

Hub and Wheel

Ref.	Part No.	Part Description	Comments
1.	814-156C	TIRE 21.5L-16.1SL 10 PLY	
2.	803-219C	NUT LUG 5/8-18 X 90 DEG PLT	
3.	814-155C	WHEEL W16C X 16.1 8 BOLT	
4.	816-035C	VALVE STEM TR415X.625X1 1/4 LG	
5.	168-250K	WHEEL AND TIRE ASSY 21.5X16.1	

Legend: ❶ = 1st revision; ❷ = 2nd revision; ❸ = 3rd revision; ● = use up existing stock; ⊗ = not interchangeable; ⊗ ❶ ❸ = for example: revision 2 is not interchangeable w/revision 1

Bin Assembly

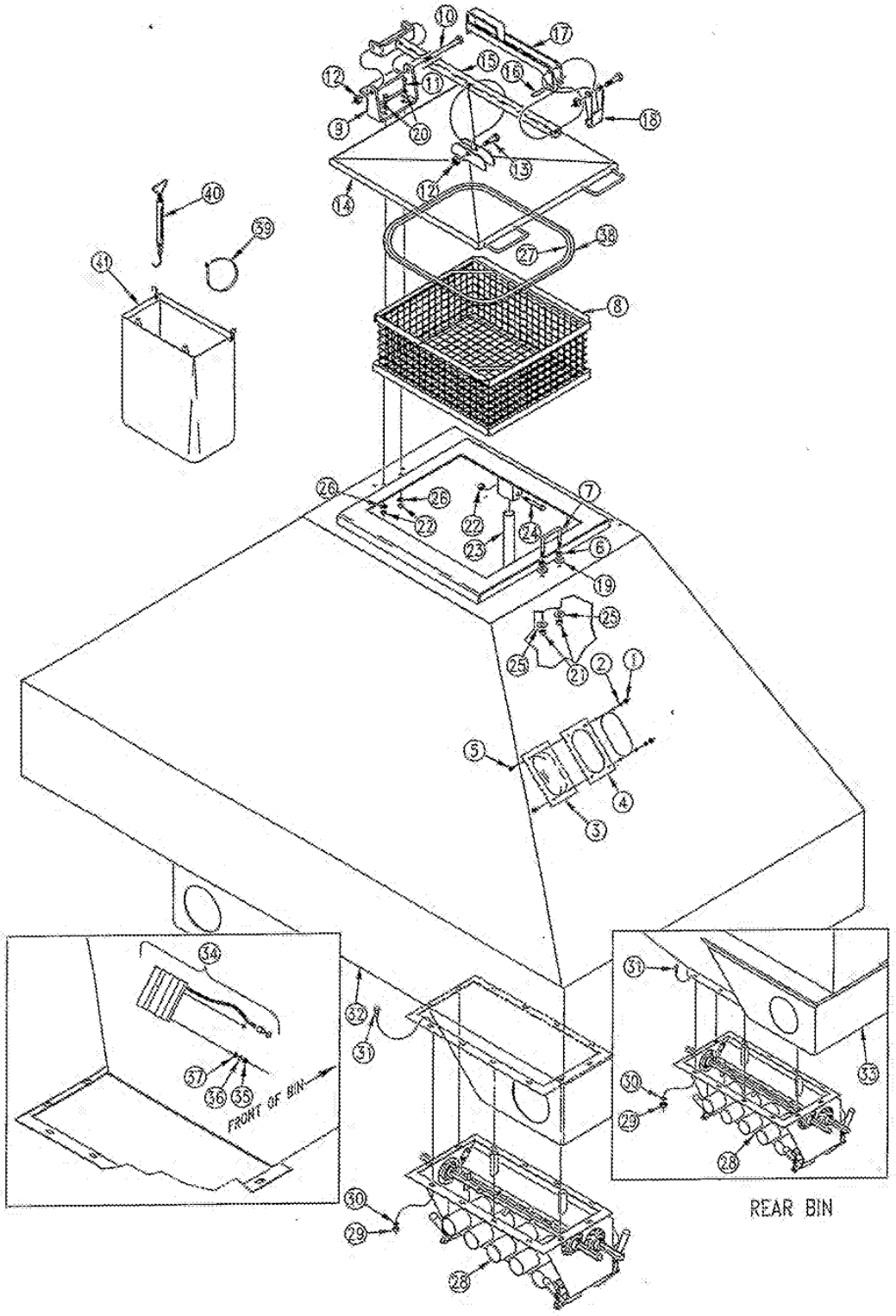

18137

UM-PK0000866
Unverferth Ex. 2025 - Page 49

Bin Assembly

Ref.	Part No.	Part Description	Comments
1.	803-001C	NUT HEX 10-24 PLT	
2.	804-004C	WASHER INTERNAL STAR #10 PLT	
3.	817-007C	GRAIN LEVEL SIGHT GLASS	
4.	816-013C	SIGHT GLASS GASKET	
5.	801-003C	SCREW RD HD SLT 10-24X1/2 PLT	
6.	803-014C	NUT HEX 3/8-16 PLT	
7.	806-077C	U-BOLT 3/8-16 X 2 5/8 X 2 3/4	
8.	167-051H	AIR DRILL HOPPER BASKET	
9.	167-050H	AIR DRILL BIN LID HINGE	
10.	802-289C	HHCS 1/2-13X8 GR5	
11.	802-159C	HHCS 5/16-18X1 GR5	
12.	803-147C	NUT HEX NYLOCK 1/2-13	
13.	802-226C	HHCS 1/2-13X2 3/4 GR5	
14.	167-049H	AIR DRILL BIN LID	
15.	167-054H	BIN LID PIVOT BAR WELDMENT	
16.	805-169C	PIN ROLL 1/2 X 1 3/4	
17.	167-048H	AIR DRILL BIN LID HANDLE WLMNT	
18.	167-035H	AIR DRILL BIN LID HOOK	
19.	804-012C	WASHER FLAT 3/8 SAE PLT	
20.	804-036C	WASHER FLAT 5/16 SAE PLT	
21.	803-013C	NUT LOCK 3/8-16 PLT	
22.	803-011C	NUT LOCK 5/16-18 PLT	
23.	167-112D	PRESSURE RELIEF PIPE	
24.	802-390C	HHCS 5/16-18X3 1/4 GR5	
25.	804-136C	WASHER FLAT 3/8 NEOPRENE PLT	
26.	804-135C	WASHER FLAT 5/16 NEOPRENE PLT	
27.	167-172D	AIR DRILL BIN LID SEAL	
28.	168-187K	METERING BOX ASSEMBLY	
	168-277K	FOUR OUTLET METERING BOX ASSEMBLY	NTA3010 only.
29.	803-006C	NUT HEX 1/4-20 PLT	
30.	804-006C	WASHER LOCK SPRING 1/4 PLT	
31.	802-078C	HHCS 1/4-20X5/8 GR5	
32.	167-099H	100 BU RR BIN W/ FLANGE WELD	S/N Y1063+.
	167-063H	100 BU REAR BIN WELDMENT	S/N Y1062-.
33.	167-096H	100 BU BIN W/ WELD BIN FLANGE	S/N Y1063+.
	167-044H	100 BUSHEL BIN WELDMENT	S/N Y1062-.
34.	VA-294000	VANSCO SMART BIN LEVEL SENSOR	
35.	803-084C	NUT HEX 8-32	
36.	804-043C	WASHER LOCK #8	
37.	804-088C	WASHER FLAT #8 SAE PLT	
38.	167-173D	BIN LID SEAL UPDATE SPACER	S/N Y1062-.
	167-089A	BIN LID SEAL FIELD UPDATE KIT	S/N Y 1062-. Includes Items 27 & 38
39.	800-035C	CABLE TIE .31X28 8DIA 120LB	
40.	890-633C	SPRING SCALE - SEED RATE CAL	
41.	818-301C	AIR DRILL CALIBRATION BAG	

Legend: ❶ = 1st revision; ❷ = 2nd revision; ❸ = 3rd revision; ✱ = use up existing stock; ⊗ = not interchangeable; ❷ ❶ ❷ = for example: revision 2 is not interchangeable w/revision 1

Bin to Frame

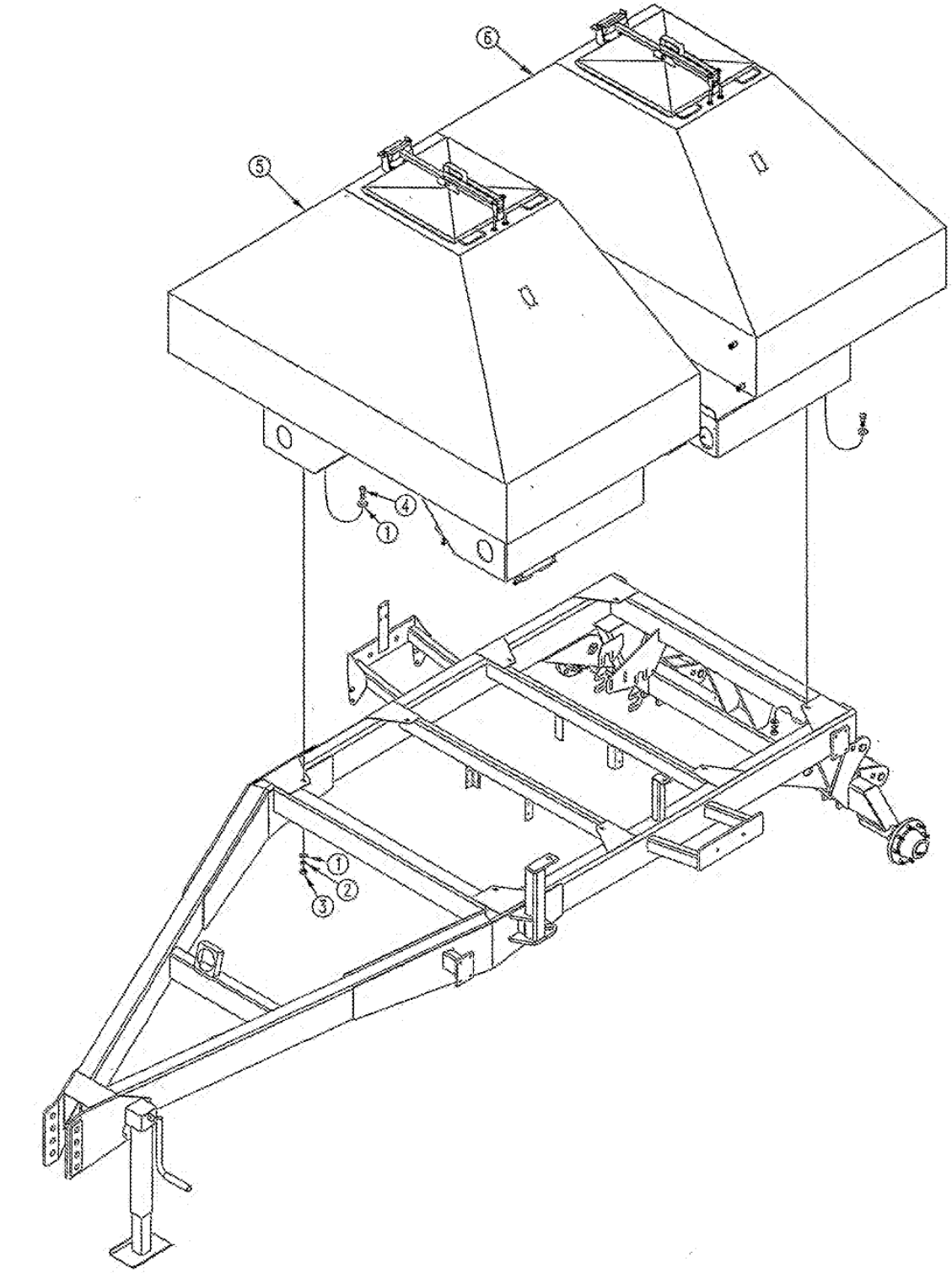

16039

UM-PK0000868

Bin to Frame

Ref.	Part No.	Part Description	Comments
1.	804-017C	WASHER FLAT 1/2 USS PLT	
2.	804-015C	WASHER LOCK SPRING 1/2 PLT	
3.	803-020C	NUT HEX 1/2-13 PLT	
4.	802-091C	HHCS 1/2-13X1 1/2 GR5	
5.	167-067L	100 BU REAR BIN ASSEMBLY	
6.	167-055L	100 BUSHEL BIN ASSEMBLY '95	

Legend: ❶ = 1st revision; ❷ = 2nd revision; ❸ = 3rd revision; ● = use up existing stock; ⊗ = not interchangeable; ⊗ ❶ ❷ = for example: revision 2 is not interchangeable w/revision 1

Step and Handrail

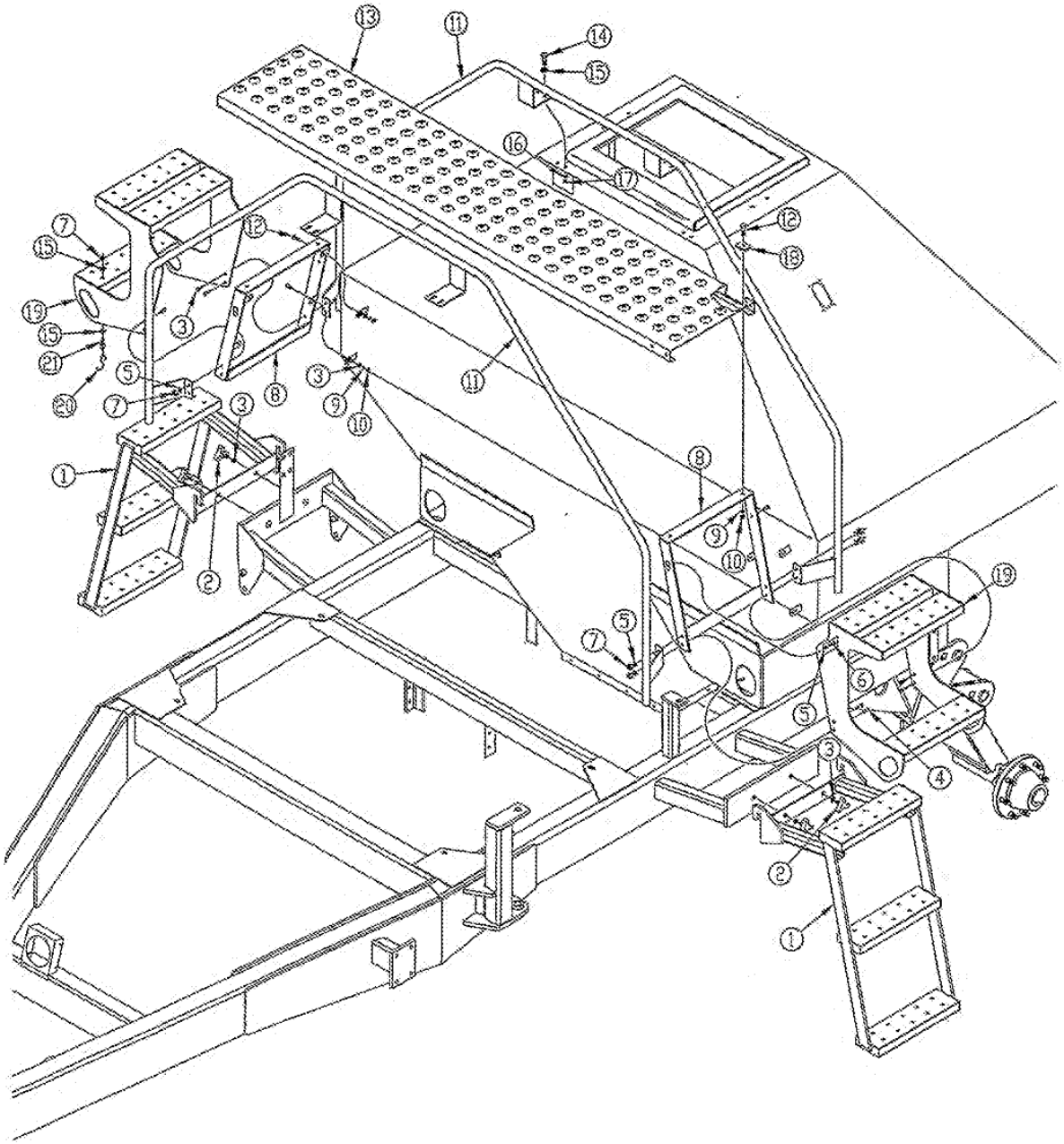

16043

UM-PK0000870

Step and Handrail

Ref.	Part No.	Part Description	Comments
1.	166-120H	2220 LOWER LADDER WELDMENT	
2.	817-131C	KNOB, TRANS. SHIELD	
3.	804-012C	WASHER FLAT 3/8 SAE PLT	
4.	802-010C	HHCS 5/16-18X1 1/4 GR5	
5.	804-009C	WASHER LOCK SPRING 5/16 PLT	
6.	802-007C	HHCS 5/16-18X3/4 GR5	
7.	803-008C	NUT HEX 5/16-18 PLT	
8.	166-118H	2220 UPPER LADDR MNT WLDMNT	
9.	804-013C	WASHER LOCK SPRING 3/8 PLT	
10.	803-014C	NUT HEX 3/8-16 PLT	
11.	166-064H	AIR DRILL HANDRAIL WELDMENT	
12.	802-017C	HHCS 3/8-16X1 GR5	
13.	119-155D	WALKBOARD 3 PT 15'	
14.	802-159C	HHCS 5/16-18X1 GR5	
15.	804-036C	WASHER FLAT 5/16 SAE PLT	
16.	804-135C	WASHER FLAT 5/16 NEOPRENE PLT	
17.	803-011C	NUT LOCK 5/16-18 PLT	
18.	119-032D	3-PT STEP RETAINER	
19.	166-117H	2220 UPPER LADDER WELDMENT	
20.	800-041C	S-HOOK #772 .177 X 1 1/8 PLT	
21.	802-602C	SP EYE 5/16-18X2 1/2	

Legend: ❶ = 1st revision; ❷ = 2nd revision; ❸ = 3rd revision; ✱ = use up existing stock; ⊘ = not interchangeable; ⊘ ❶ ❷ = for example; revision 2 is not interchangeable w/revision 1

UM-PK0000871

Meterbox

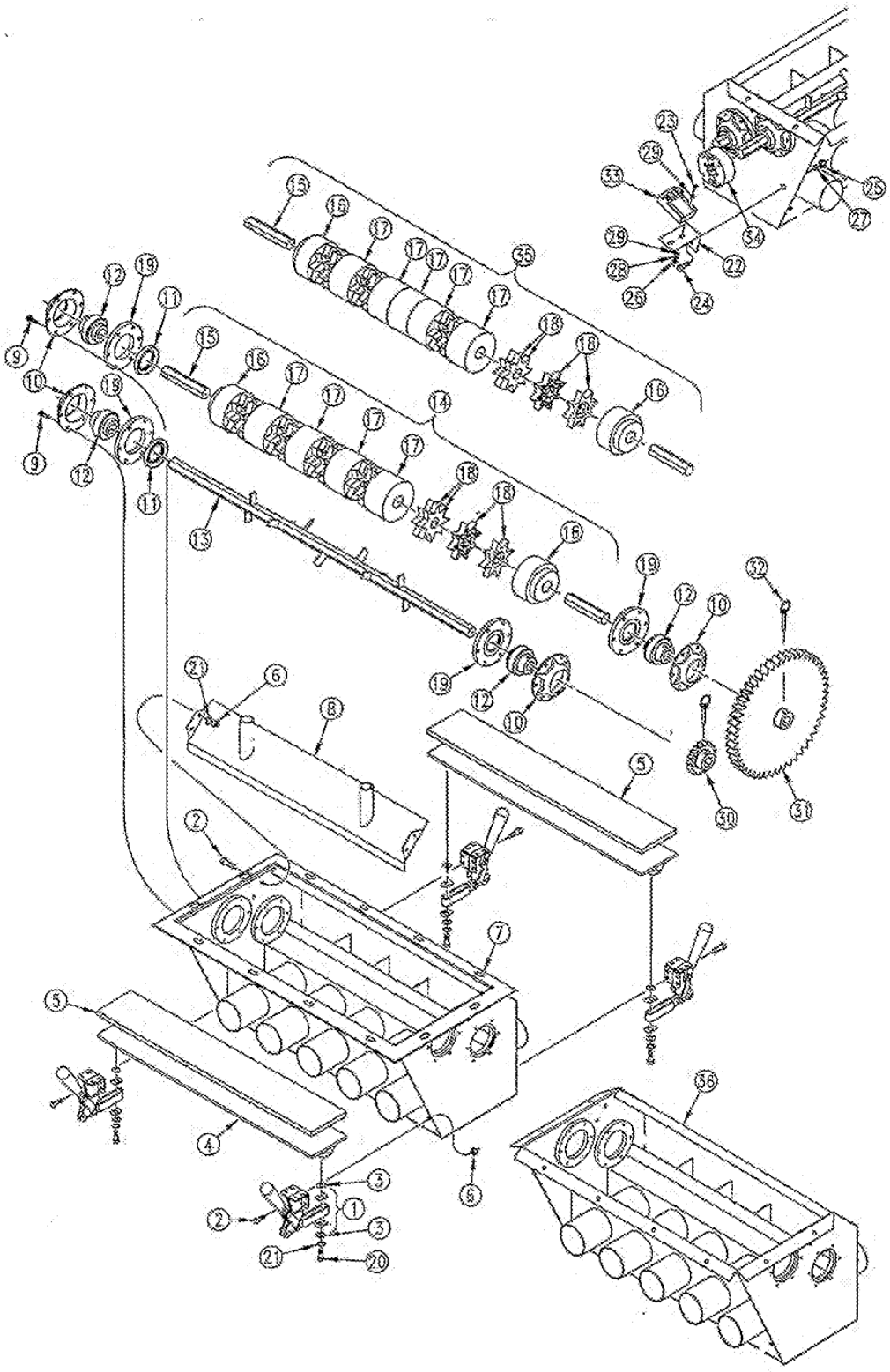

Meterbox

Ref.	Part No.	Part Description	Comments
1.	800-179C	DESTACO HOLD DOWN ACTION CLAMP	
2.	802-078C	HHCS 1/4-20X5/8 GR5	
3.	804-007C	WASHER FLAT 1/4 SAE PLT	
4.	168-190H	CALIBRATION LID WELDMENT	
5.	816-201C	METERING BOX ACCESS SEAL	
6.	803-006C	NUT HEX 1/4-20 PLT	
7.	168-295H	METERING BOX WELD W/OFL	S/N Y1063+.
8.	168-185H	METERING BOX TOP PANEL WELDMNT	
9.	801-151C	SCR HEX SELF TAP 1/4-20X1 TYPE F	S/N Y1063+.
	801-104C	HWHSTS #10-24 X 1 TYPE F	S/N Y1062-.
10.	890-466C	RIBB BRG FLING .266 MT HOLE PLT	S/N Y1063+.
	107-112D	BEARING FLANGE-3/16 DIA HOLES	S/N Y1062-.
11.	816-199C	METERING BOX BEARING SEAL	
12.	188-009V	BEARING .755 HEX BORE W/S-S	
13.	168-189H	AGITATOR SHAFT WELDMENT	
14.	168-188S	METERING BOX STAR SHAFT ASSY	
15.	168-269D	METER SHAFT	
16.	817-207C	METERING BOX END SPACER	
17.	817-206C	METERING BOX MIDDLE SPACER	
18.	817-018C	AGITATOR 8 POINT HALF	
19.	168-251D	METERING BOX SEAL FLANGE	
20.	802-167C	HHCS 1/4-20X1 1/2 GR5	
21.	804-003C	WASHER FLAT #8 BRASS	
22.	168-323D	MONITOR SWITCH MOUNT BKT	
23.	801-067C	SCREW RD HD 8-32 X 1 LG PLT	
24.	802-014C	HHCS 3/8-16X3/4 GR5	
25.	803-014C	NUT HEX 3/8-16 PLT	
26.	803-064C	NUT HEX 8-32	
27.	804-013C	WASHER LOCK SPRING 3/8 PLT	
28.	804-043C	WASHER LOCK #8	
29.	804-088C	WASHER FLAT #8 SAE PLT	
30.	808-192C	GEAR 17 TOOTH QUICK CHANGE	
31.	168-243D	GEAR 54 TOOTH QUICK CHANGE	
32.	805-158C	PIN LYNCH 5/16 X 2 11/32	
33.	VA-278000	VANSCO SMART SHAFT SENSOR	
34.	VA-111004-2	2 MAGNET ACTUATOR 3/4 HEX	
35.	168-278S	FOUR OUTLET METER SHAFT ASSY	NTA3010 only.
36.	168-186H	METERING BOX WELDMENT	S/N Y1062-.

Legend: ❶ = 1st revision; ❷ = 2nd revision; ❸ = 3rd revision; ✱ = use up existing stock; ⊗ = not interchangeable; ❷ ❸ ❹ = for example: revision 2 is not interchangeable w/revision 1

Fan and Transition

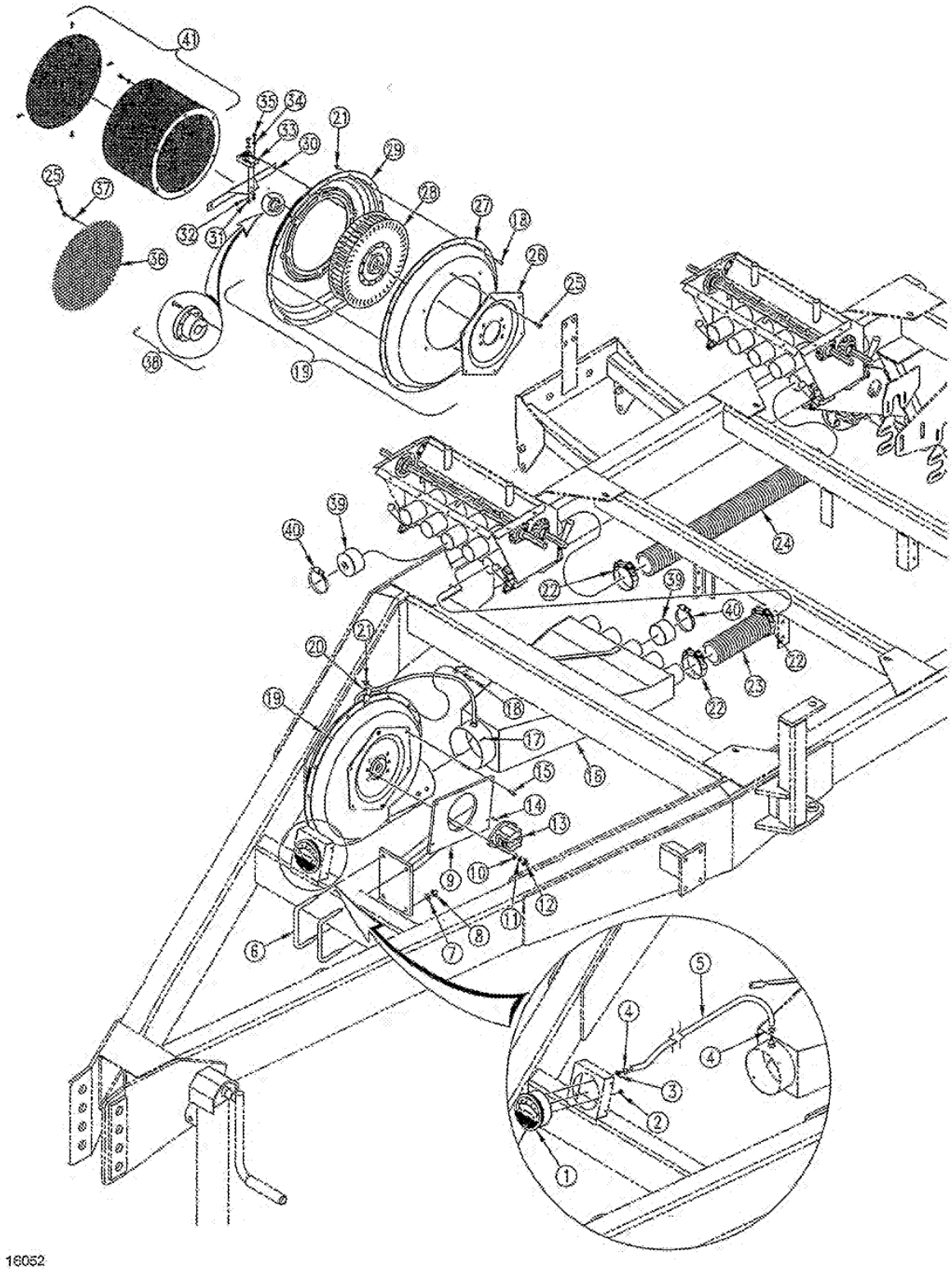

16052

UM-PK0000874

Fan and Transition

Ref.	Part No.	Part Description	Comments
1.	890-471C	MAGNEHELIC PRES GAGE-0-50inH2O	
2.	890-472C	BREATHER FILTER VENT 1/8 NPT	
3.	830-276C	AD 1/8MNPT X 1/4HB BRASS	
4.	800-034C	CLAMP HOSE 9/16 DIA.	
5.	168-141D	AIR GAUGE HOSE 36	
6.	806-067C	U-BOLT 1/2-13 X 6 1/32 X 4 1/4	
7.	804-015C	WASHER LOCK SPRING 1/2 PLT	
8.	803-020C	NUT HEX 1/2-13 PLT	
9.	166-119H	2220 FAN MOUNT WELDMENT	
10.	804-012C	WASHER FLAT 3/8 SAE PLT	
11.	804-013C	WASHER LOCK SPRING 3/8 PLT	
12.	803-014C	NUT HEX 3/8-16 PLT	
13.	810-273C	HYD MOTOR 7/8ORBF	
14.	168-094D	HYD MOTOR 1/8 KEY	
15.	801-002C	SCREW HEX SLT10-16X3/8P.THD CT	
16.	168-205H	FAN OUTLET TRANSITION	
17.	801-002C	SCREW HEX SLT10-16X3/8P.THD CT	
18.	802-375C	HFSS 1/4-20X1 GR5	
19.	890-395C	6 HYDRAULIC FAN KIT W/ SCREEN	
20.	800-064C	HOSE CLIP 13/16 ID	
21.	803-230C	NUT HEX FLANGE 1/4-20 PLT	
22.	800-180C	2 1/2 AIR HOSE BAND CLAMP	
23.	168-364D	2 1/2 INCH AIR HOSE 21 1/2 LG	
24.	168-363D	2 1/2 INCH AIR HOSE 34 LG	
25.	801-081C	SCREW HEX SELF TAP 1/4-20X3/4	
26.	23318	HYDRAULIC MOTOR MOUNT PLATE	
27.	23320	6 FAN HOUSING LH SIDE	
28.	17089	13 FAN IMPELLER	
29.	21121	6 FAN HOUSING RH SIDE	
30.	168-180H	AIR DRILL FAN SENSOR BRACKET	
31.	803-064C	NUT HEX 8-32	
32.	804-043C	WASHER LOCK #8	
33.	❷ VA-291003	**VANSCO SMART FAN SENSOR, LONG**	
	❶ VA-291000	**OBSOLETE, REPLD BY VA-291003**	
34.	804-088C	WASHER FLAT #8 SAE PLT	
35.	801-067C	SCREW RD HD 8-32 X 1 LG PLT	
36.	●❶ 20002	**3/8 MESH FAN SCREEN**	**S/N Y1062-.No longer avaiable. Replaced by 890-624C, item 41.**
37.	804-131C	WASHER FENDER 1/4 X 1	
38.	890-396C	BUSHING - FAN	
39.	817-344C	CAP 2 1/2 OD TUBE 1 1/2 LONG	Used on NTA3010 only.
40.	800-067C	CLAMP BAND 2 1/2	Used on NTA3010 only.
41.	❷ 890-624C	**MESH FAN SCREEN**	**S/N Y1063+.**

Legend: ❶ = 1st revision; ❷ = 2nd revision; ❸ = 3rd revision; ● = use up existing stock; ⊘ = not interchangeable; ⊘ ❶ ❷ = for example: revision 2 is not interchangeable w/revision 1

UM-PK0000875

Drive Wheel to Electric Clutch

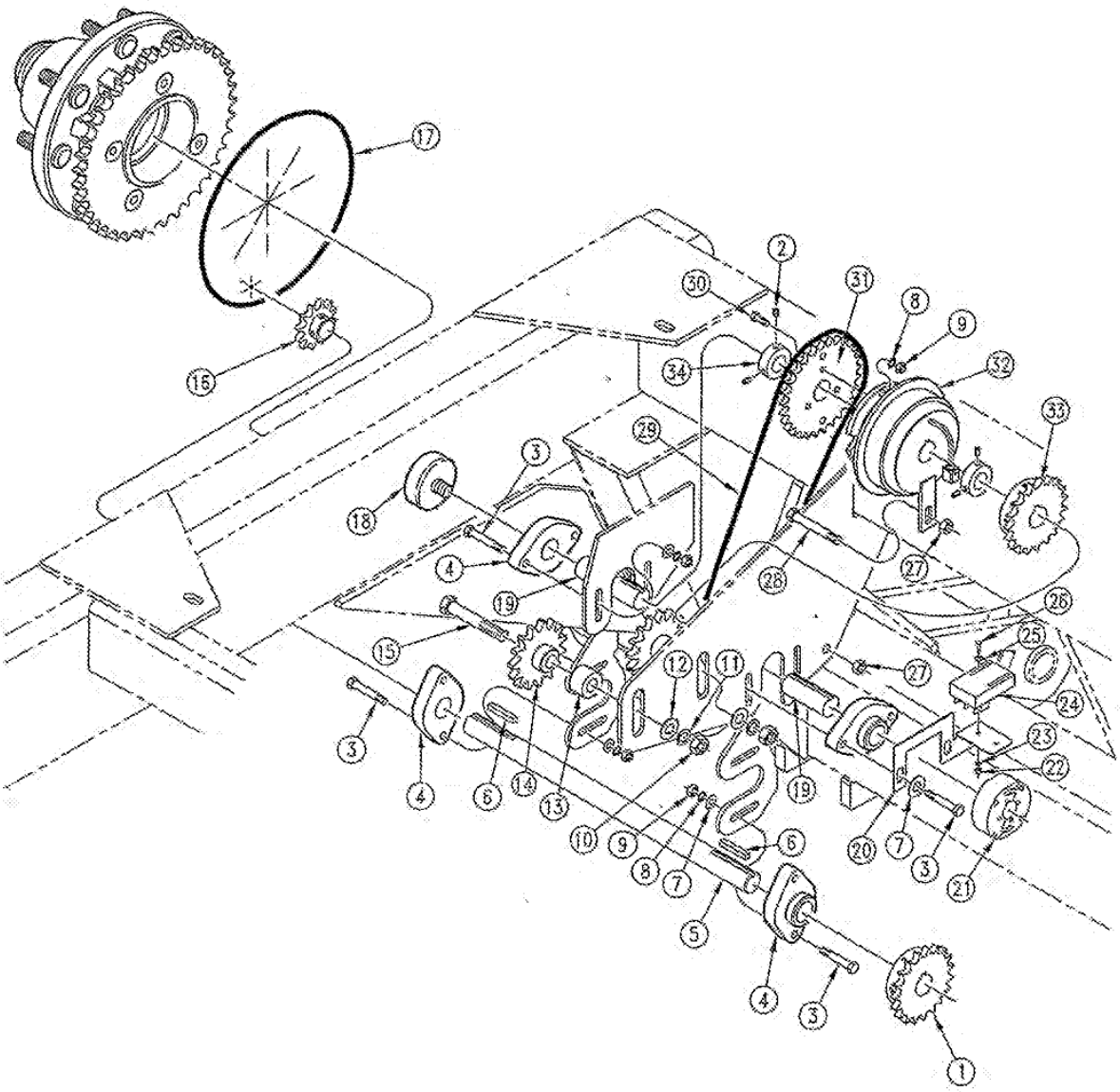

16087

UM-PK0000876

Drive Wheel to Electric Clutch

Ref.	Part No.	Part Description	Comments
1.	808-125C	SPKT 40B19X1 B MAX .875 THRU	NTA3510, ADI334, ADI345
	808-159C	SPKT 40B17 X 1 BORE W/KW & SS	NTA3010, CTA4000
2.	801-035C	SCREW SET 5/16-18 SKT KP X 3/8	
3.	802-010C	HHCS 5/16-18X1 1/4 GR5	
4.	822-073C	BEARING 2 BOLT CAM LOCK 1 BORE	
5.	168-355D	2220 MAIN DRIVE SHAFT	
6.	168-276D	KEY 1/4 X 1/4 X 1 3/8 LG	
7.	804-010C	WASHER FLAT 5/16 USS PLT	
8.	804-009C	WASHER LOCK SPRING 5/16 PLT	
9.	803-006C	NUT HEX 5/16-18 PLT	
10.	803-021C	NUT HEX 5/8-11 PLT	
11.	804-022C	WASHER LOCK SPRING 5/8 PLT	
12.	804-021C	WASHER FLAT 5/8 SAE PLT	
13.	181-131D	SPEED CHANGE SPACER	
14.	808-046C	SPKT 40A17 IDLER	
15.	802-059C	HHCS 5/8-11X3 GR5	
16.	808-237C	SPKT 60B11 X 1 BORE W/KW & SS	
17.	809-188C	CHAIN DOUBLE RL #60-2X39PI W/C	
18.	890-437C	ACRE METER AIR DRILL 2220	
19.	168-308D	AIR DRILL CLUTCH SHAFT	
20.	168-240D	METER SHAFT SENSOR MNT BRACKET	
21.	VA-111002-2	2 MAGNET ACTUATOR	
22.	803-064C	NUT HEX 8-32	
23.	804-043C	WASHER LOCK #8	
24.	VA-278001	VANSCO SMART GND SPD SENSOR	
25.	804-088C	WASHER FLAT #8 SAE PLT	
26.	801-067C	SCREW RD HD 8-32 X 1 LG PLT	
27.	803-014C	NUT HEX 3/8-16 PLT	
28.	802-318C	HHCS 3/8-16X5 GR5	
29.	809-192C	CHAIN RL 2040A X 51 PITCH W/C	ADI345, CTA4000
	809-189C	CHAIN RL 2040A X 53 PITCH W/C	NTA3510, NTA3010, ADI334
30.	802-159C	HHCS 5/16-18X1 GR5	
31.	168-123D	40A29 CLUTCH SPROCKET	ADI345, CTA4000
	168-183D	40A38 CLUTCH SPROCKET	NTA3510, NTA3010, ADI334
32.	823-074C	AIR DRILL ELECTRIC CLUTCH	
33.	808-062C	SPKT 40B15 X 1 B W/KW & SS	
34.	181-151C	1 BORE KEYED SET COLLAR	

Legend: ❶ = 1st revision; ❷ = 2nd revision; ❸ = 3rd revision; ● = use up existing stock; ⊗ = not interchangeable; ❷ ❶ ❸ = for example: revision 2 is not interchangeable w/revision 1

Electric Clutch to Gearbox Drive

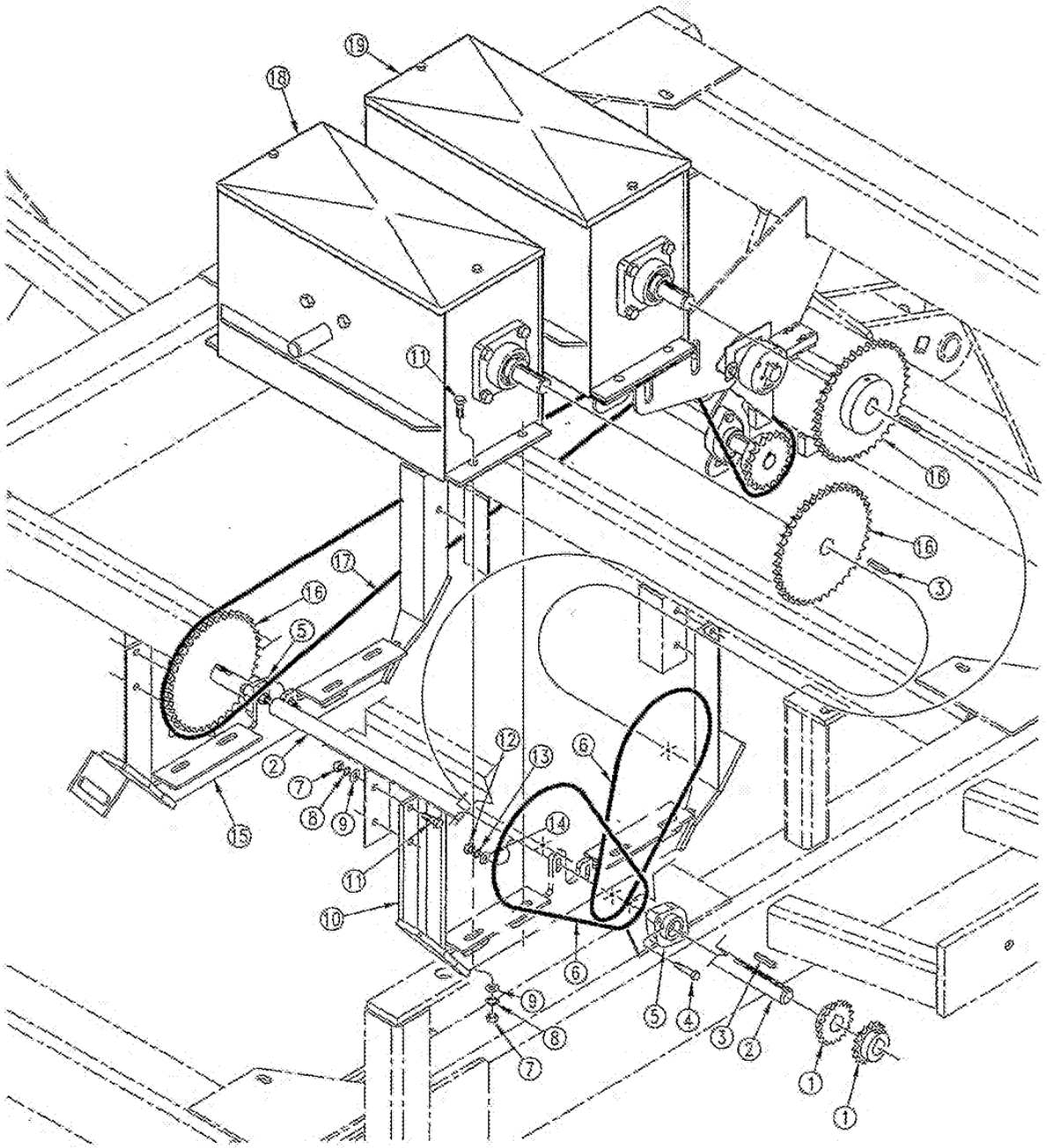

16089

UM-PK0000878

Electric Clutch to Gearbox Dr

Ref.	Part No.	Part Description	Comments
1.	808-062C	SPKT 40B15 X 1 B W/KW & SS	
2.	168-354D	2220 GEARBOX JACKSHAFT	
3.	168-276D	KEY 1/4 X 1/4 X 1 3/8 LG	
4.	802-010C	HHCS 5/16-18X1 1/4 GR5	
5.	822-073C	BEARING 2 BOLT CAM LOCK 1 BORE	
6.	809-065C	CHAIN RL 40 X 61 PITCH	
7.	803-014C	NUT HEX 3/8-16 PLT	
8.	804-013C	WASHER LOCK SPRING 3/8 PLT	
9.	804-012C	WASHER FLAT 3/8 SAE PLT	
10.	166-106H	GEARBOX BRACKET WELDMENT LH	
11.	802-017C	HHCS 3/8-16X1 GR5	
12.	803-008C	NUT HEX 5/16-18 PLT	
13.	804-009C	WASHER LOCK SPRING 5/16 PLT	
14.	804-010C	WASHER FLAT 5/16 USS PLT	
15.	166-114H	GEARBOX BRACKET WELDMENT RH	
16.	808-191C	SPKT 40B45 1 BORE W/KW & SS	
	808-064C	SPKT 40B37 X 1 B W/KW&2-SS	NTA3010 only.
17.	809-190C	CHAIN RL 2040A X 98 PITCH W/C	
18.	168-248K	FRONT GEARBOX ASSEMBLY 2220	Refer to page 5-12 and page 5-14 for breakdown..
19.	168-249K	REAR GEARBOX ASSEMBLY 2220	Refer to page 5-16 and page 5-18 for breakdown..

Legend: ❶ = 1st revision; ❷ = 2nd revision; ❸ = 3rd revision; ✱ = use up existing stock; ⊗ = not interchangeable; ❷ ❸ ⊗ = for example: revision 2 is not interchangeable w/revision 1

Gearbox to Meter Box Drive

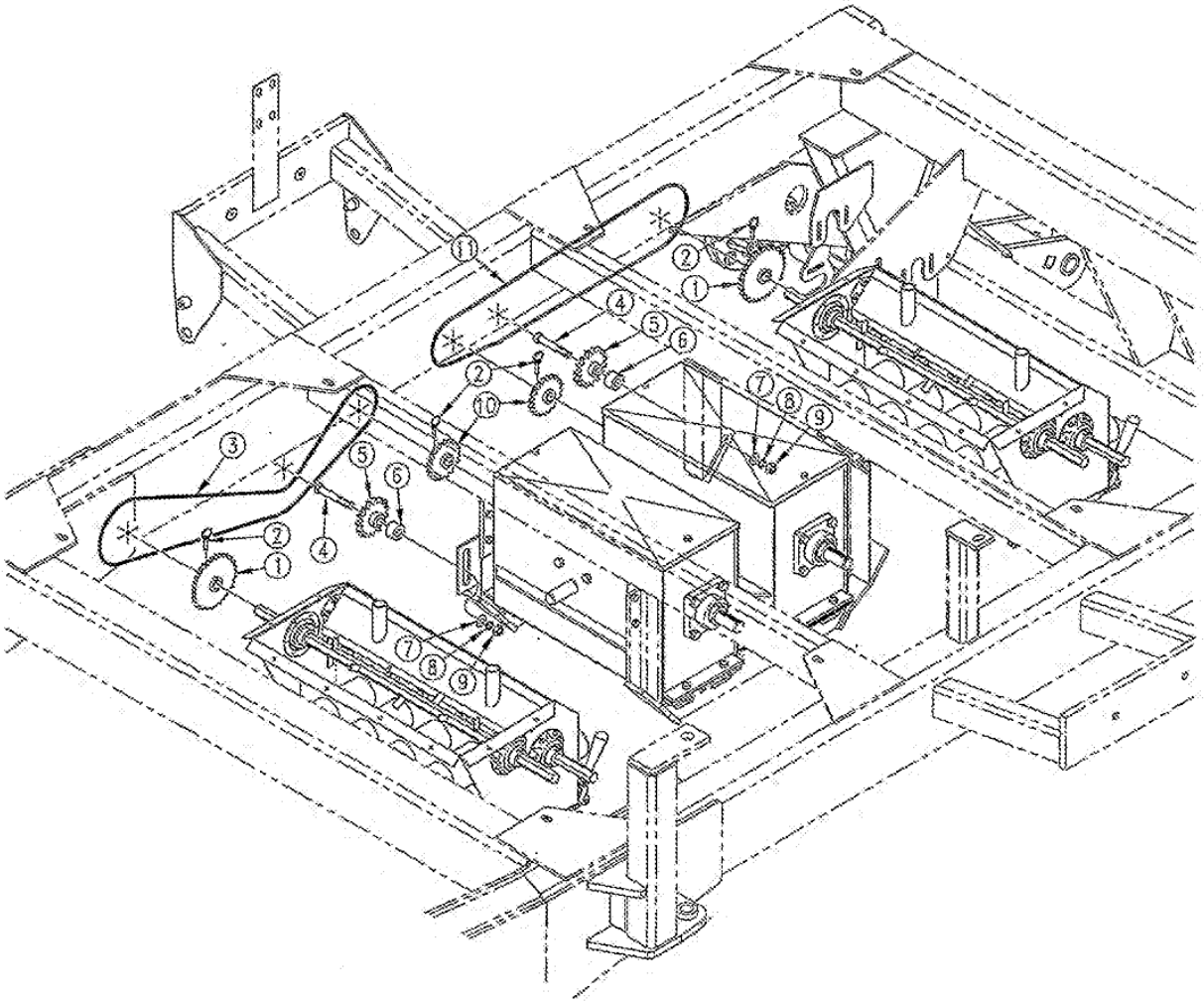

16130

UM-PK0000880

Gearbox to Meter Box Drive

Ref.	Part No.	Part Description	Comments
1.	168-191H	30T QUICK CHANGE SPKT WELDMENT	
2.	805-158C	PIN LYNCH 5/16 X 2 11/32	
3.	809-191C	CHAIN RL 2040A X 47 PITCH W/C	
4.	802-058C	HHCS 5/8-11X2 1/2 GR5	
5.	808-046C	SPKT 40A17 IDLER	
6.	161-131D	SPEED CHANGE SPACER	
7.	804-021C	WASHER FLAT 5/8 SAE PLT	
8.	804-022C	WASHER LOCK SPRING 5/8 PLT	
9.	803-021C	NUT HEX 5/8-11 PLT	
10.	168-192H	20T QUICK CHANGE SPKT WELDMENT	
11.	809-009C	CHAIN RL 20-40A 46 PITCH	

Legend: ❶ = 1st revision; ❷ = 2nd revision; ❸ = 3rd revision; ✱ = use up existing stock; ⊗ = not interchangeable; ⊗ ❶ ❸ = for example: revision 2 is not interchangeable w/revision 1

Vansco Monitor/Harness

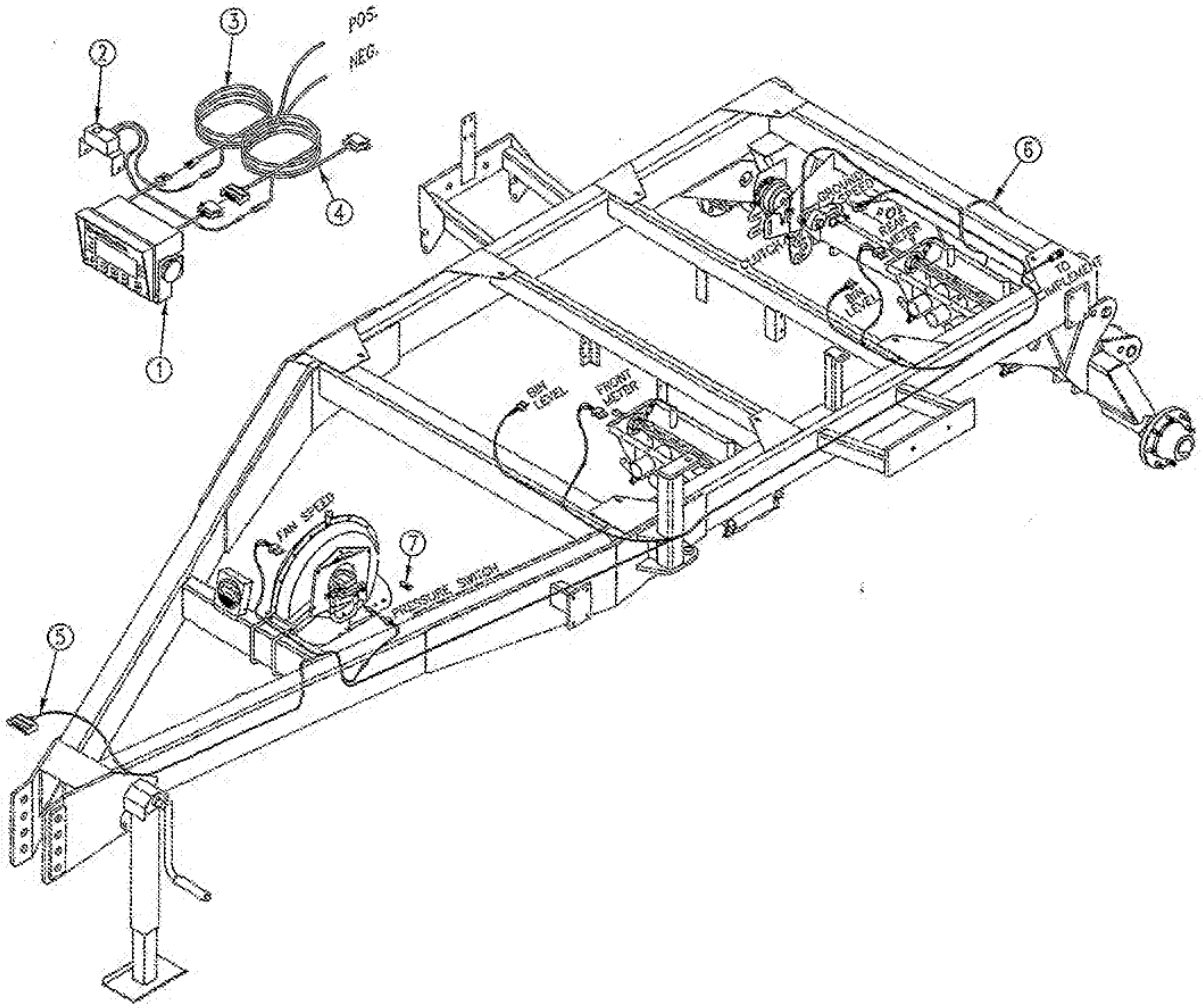

16139

UM-PK0000882

Vansco Monitor/Harness

Ref.	Part No.	Part Description	Comments
1.	VA-490001	VANSCO ADC2220 MUX CONSOLE	
2.	VA-490002	ADC2220 CLUTCH SWITCH BOX	
3.	VA-490700	VANSCO ADC2220 POWER LEAD	
4.	VA-490701	VANSCO ADC2220 CONSOLE OUTPUT	
5.	VA-490702	VANSCO ADC2220 CART HARNESS	
6.	800-060C	CABLE TIE .19X14.25 3DIA 50LB	
7.	823-187C	PRESSURE SWITCH REPLACE LOOP	

Legend: ❶ = 1st revision; ❷ = 2nd revision; ❸ = 3rd revision; ● = use up existing stock; ⊗ = not interchangeable; ❶ ❷ ❸ = for example: revision 2 is not interchangeable w/revision 1

Gearbox Levers

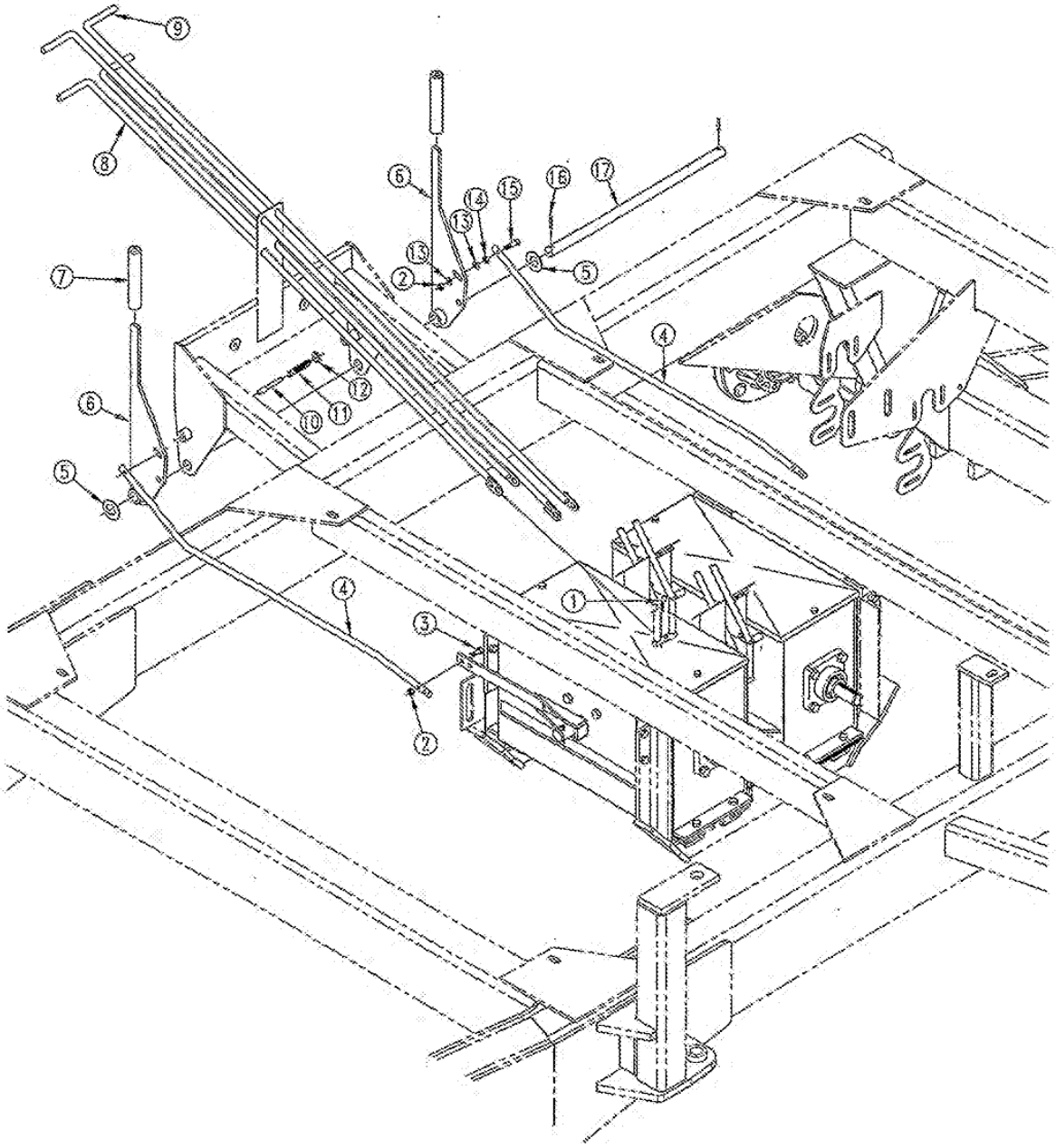

16169

UM-PK0000884

Gearbox Levers

Ref.	Part No.	Part Description	Comments
1.	805-032C	PIN HAIR COTTER .148 WIRE	
2.	803-011C	NUT LOCK 5/16-18 PLT	
3.	802-010C	HHCS 5/16-18X1 1/4 GR5	
4.	168-358D	2220 CLUTCH LINKAGE ROD	
5.	804-025C	WASHER FLAT 3/4 SAE PLT	
6.	166-107H	CLUTCH HANDLE WELDMENT	
7.	817-056C	30' 3-SEC TRANS LOCK-UP GRIP	
8.	168-246H	2220 GEARSHIFT HNDL WLDMT-SHRT	
9.	168-245H	2220 GEARSHIFT HNDL WLDMT-LG	
10.	204-221D	PLUNGER	
11.	807-123C	SPRING COMP .39X1.12X.047W	
12.	800-051C	RING, SPLIT 1-1/4 I.D.	
13.	804-036C	WASHER FLAT 5/16 SAE PLT	
14.	803-008C	NUT HEX 5/16-18 PLT	
15.	802-013C	HHCS 5/16-18X1 3/4 GR5	
16.	805-023C	PIN ROLL 3/16X1 1/4 PLT	
17.	166-451D	CLUTCH HANDLE PIVOT SHAFT	

Legend: ❶ = 1st revision; ❷ = 2nd revision; ❸ = 3rd revision; ● = use up existing stock; ⊘ = not interchangeable; ⊘ ① ❷ = for example: revision 2 is not interchangeable w/revision 1

UM-PK0000885

Front Gearbox (S/N Y1000-Y1062)

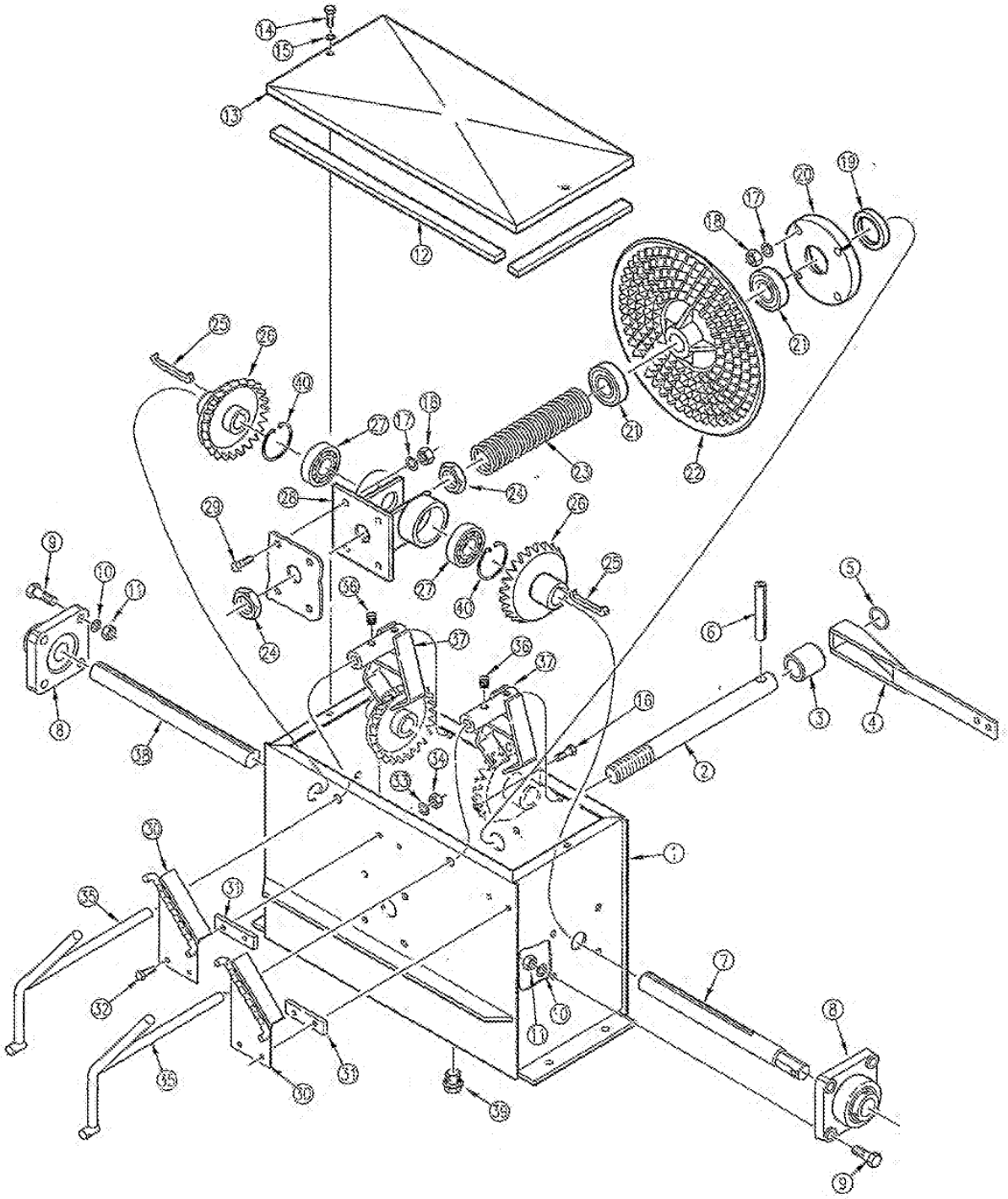

16180

UM-PK0000886

Front Gearbox (S/N Y1000-Y[illegible]62)

Ref.	Part No.	Part Description	Comments
1.	168-155H	FRONT GEARBOX HOUSING	
2.	168-212D	PLATE GEAR SHAFT	
3.	168-283D	GEARBOX LEVER CLUTCH TUBE	
4.	168-247H	GEARBOX SHIFT LINKAGE RAMP LG	
5.	816-166C	O-RING 1 ID X 1 1/4 OD X 1/8	
6.	805-169C	PIN ROLL 1/2 X 1 3/4	
7.	168-300D	GEARBOX OUTPUT SHAFT W/HEX	
8.	822-074C	BEARING 4 BOLT CAM LOCK 1 BORE	
9.	802-029C	HHCS 7/16-14X1 1/2 GR5	
10.	804-014C	WASHER LOCK 7/16 PLT	
11.	803-015C	NUT HEX 7/16-14 PLT	
12.	990-024R	SEAL 5/16 X 3/4 DOR-TITE TRAY	
13.	168-164H	GEARBOX LID	
14.	802-087C	HHCS 5/16-18X1 SS	
15.	804-009C	WASHER LOCK SPRING 5/16 PLT	
16.	802-079C	HHCS 3/8-16X1 1/4 GR5	
17.	804-013C	WASHER LOCK SPRING 3/8 PLT	
18.	803-014C	NUT HEX 3/8-16 PLT	
19.	816-053C	SEAL OIL 1 1/2 X 2 1/8 X 5/16	
20.	168-208D	CLUTCH SEAL HOUSING	
21.	822-069C	BEARING THRUST 1 ID X 2 ODX5/8	
22.	168-187D	MULTI GEAR PLATE GEAR	
23.	807-041C	SPRING GEARBOX CLUTCH	
24.	803-030C	NUT HEX JAM 1-8 PLT	
25.	890-353C	GEARBOX BEVEL GEAR KEY	
26.	168-188D	24T BEVEL PINNION GEAR	
27.	822-070C	BEARING BALL 1 ID X 2 OD X 5/8	
28.	168-157H	GEARBOX BEARING MOUNT	
29.	802-017C	HHCS 3/8-16X1 GR5	
30.	168-193H	GEARBOX SHIFT INDICATOR - REAR	
31.	168-209D	GEAR INDICATOR SPACER	
32.	802-004C	HHCS 1/4-20X3/4 GR5	
33.	804-006C	WASHER LOCK SPRING 1/4 PLT	
34.	803-006C	NUT HEX 1/4-20 PLT	
35.	168-195H	GEARBOX SHIFTER/IND WLDMT REAR	
36.	801-023C	SCREW SET SH 3/8-16X3/8 TYPE C	
37.	168-158H	SHIFT FORK	
38.	168-213D	GEARBOX INPUT SHAFT	
39.	800-066C	DRAIN PLUG 3/4-16 UNF PLATED	
40.	800-088C	SNAP RING INT 2.000	

Legend: ① = 1st revision; ② = 2nd revision; ③ = 3rd revision; ● = use up existing stock; ⊘ = not interchangeable; ③ ① ② = for example: revision 2 is not interchangeable w/revision 1

Front Gearbox (S/N Y1063+)

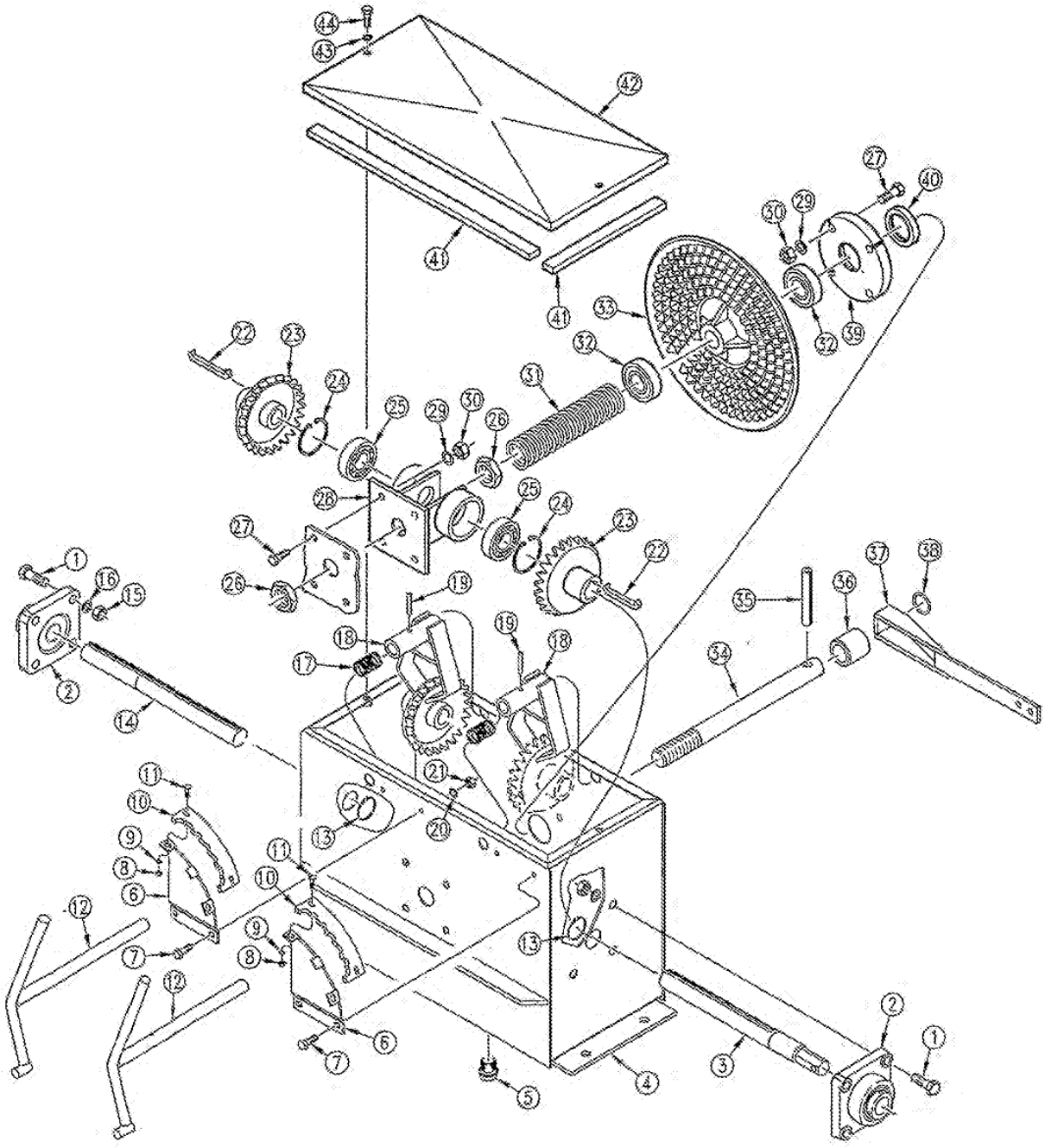

17073

UM-PK0000888

Front Gearbox (S/N Y1063+)

Ref.	Part No.	Part Description	Comments
1.	802-029C	HHCS 7/16-14X1 1/2 GR5	
2.	822-074C	BEARING 4 BOLT CAM LOCK 1 BORE	
3.	168-300D	GEARBOX OUTPUT SHAFT W/HEX	
4.	168-269H	FRONT GEARBOX HOUSING - NEW	
5.	800-068C	DRAIN PLUG 3/4-16 UNF PLATED	
6.	168-378D	SHIFT INDICATOR VERT PLT FRT	
7.	802-004C	HHCS 1/4-20X3/4 GR5	
8.	803-001C	NUT HEX 10-24 PLT	
9.	804-054C	WASHER LOCK #10	
10.	817-342C	GEARBOX SHIFT INDICATOR	
11.	801-003C	SCREW RD HD SLT 10-24X1/2 PLT	
12.	168-274H	SHIFTER/INDICATOR FRT - NEW	
13.	800-021C	SNAP RING 1.000	
14.	168-213D	GEARBOX INPUT SHAFT	
15.	803-015C	NUT HEX 7/16-14 PLT	
16.	804-014C	WASHER LOCK 7/16 PLT	
17.	807-175C	SPRING COMP .796ODX.065WX1.22	
18.	168-270H	SHIFT FORK - NEW	
19.	805-022C	PIN ROLL 3/16 X 1 PLT	
20.	804-006C	WASHER LOCK SPRING 1/4 PLT	
21.	803-008C	NUT HEX 1/4-20 PLT	
22.	890-353C	GEARBOX BEVEL GEAR KEY	
23.	168-188D	24T BEVEL PINNION GEAR	
24.	800-088C	SNAP RING INT 2.000	
25.	822-070C	BEARING BALL 1 ID X 2 OD X 5/8	
26.	803-030C	NUT HEX JAM 1-8 PLT	
27.	802-079C	HHCS 3/8-16X1 1/4 GR5	
28.	168-157H	GEARBOX BEARING MOUNT	
29.	804-013C	WASHER LOCK SPRING 3/8 PLT	
30.	803-014C	NUT HEX 3/8-16 PLT	
31.	807-041C	SPRING GEARBOX CLUTCH	
32.	822-069C	BEARING THRUST 1 ID X 2 ODX5/8	
33.	168-187D	MULTI GEAR PLATE GEAR	
34.	168-212D	PLATE GEAR SHAFT	
35.	805-169C	PIN ROLL 1/2 X 1 3/4	
36.	168-283D	GEARBOX LEVER CLUTCH TUBE	
37.	168-247H	GEARBOX SHIFT LINKAGE RAMP LG	
38.	816-166C	O-RING 1 ID X 1 1/4 OD X 1/8	
39.	168-208D	CLUTCH SEAL HOUSING	
40.	816-053C	SEAL OIL 1 1/2 X 2 1/8 X 5/16	
41.	990-024R	SEAL 5/16 X 3/4 DOR-TITE TRAY	
42.	168-164H	GEARBOX LID	
43.	804-009C	WASHER LOCK SPRING 5/16 PLT	
44.	802-087C	HHCS 5/16-18X1 SS	

Legend: ① = 1st revision; ② = 2nd revision; ③ = 3rd revision; ✱ = use up existing stock; ⊗ = not interchangeable; ② ① ③ = for example: revision 2 is not interchangeable w/revision 1

Rear Gearbox (S/N Y1000-Y1062)

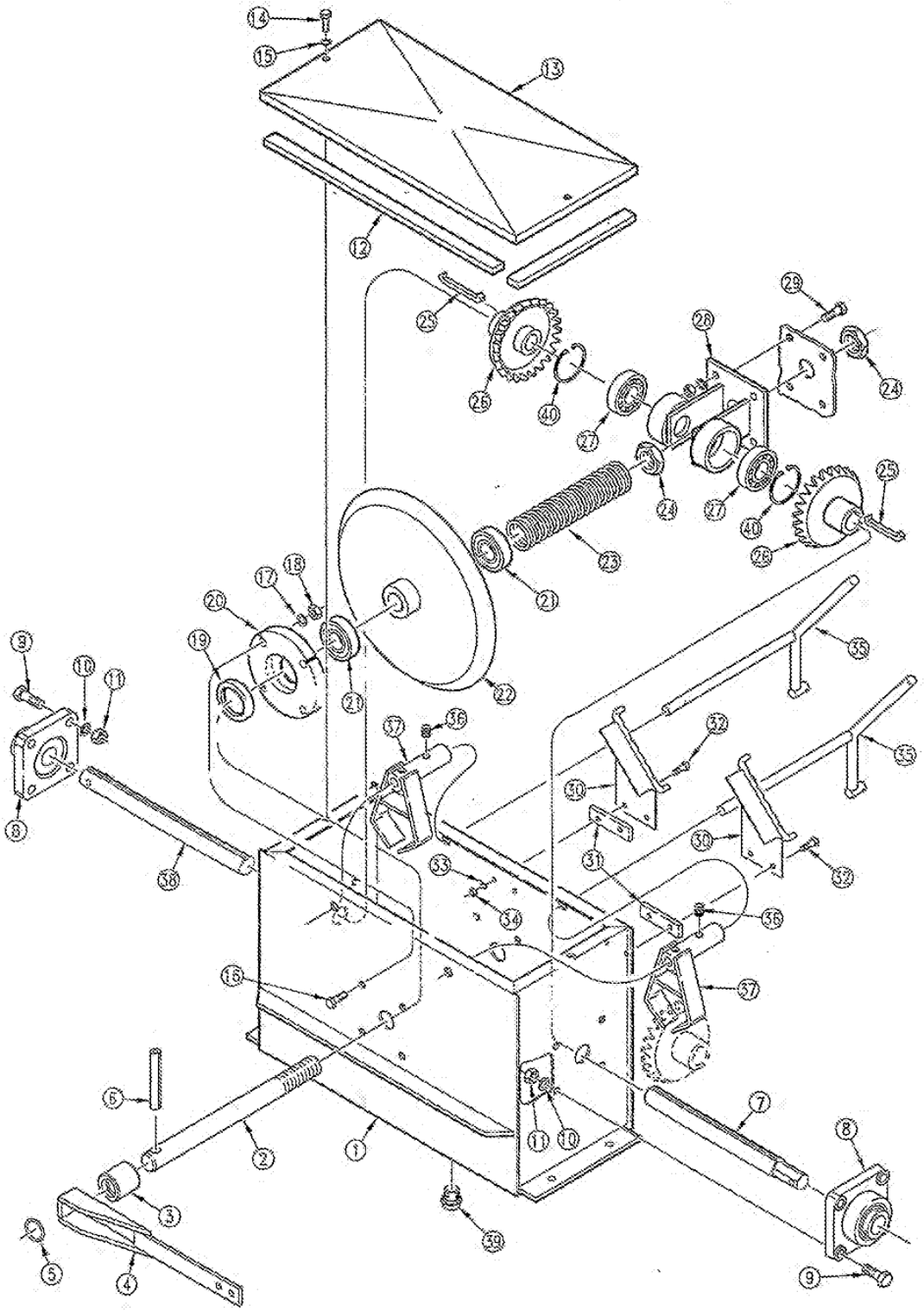

16187

UM-PK0000890

Rear Gearbox (S/N Y1000-Y[illegible]2)

Ref.	Part No.	Part Description	Comments
1.	168-156H	REAR GEARBOX HOUSING	
2.	168-212D	PLATE GEAR SHAFT	
3.	168-283D	GEARBOX LEVER CLUTCH TUBE	
4.	168-247H	GEARBOX SHIFT LINKAGE RAMP LG	
5.	816-166C	O-RING 1 ID X 1 1/4 OD X 1/8	
6.	805-169C	PIN ROLL 1/2 X 1 3/4	
7.	168-300D	GEARBOX OUTPUT SHAFT W/HEX	
8.	822-074C	BEARING 4 BOLT CAM LOCK 1 BORE	
9.	802-029C	HHCS 7/16-14X1 1/2 GR5	
10.	804-014C	WASHER LOCK 7/16 PLT	
11.	803-015C	NUT HEX 7/16-14 PLT	
12.	990-024R	SEAL 5/16 X 3/4 DOR-TITE TRAY	
13.	168-164H	GEARBOX LID	
14.	802-087C	HHCS 5/16-18X1 SS	
15.	804-009C	WASHER LOCK SPRING 5/16 PLT	
16.	802-079C	HHCS 3/8-16X1 1/4 GR5	
17.	804-013C	WASHER LOCK SPRING 3/8 PLT	
18.	803-014C	NUT HEX 3/8-16 PLT	
19.	816-053C	SEAL OIL 1 1/2 X 2 1/8 X 5/16	
20.	168-208D	CLUTCH SEAL HOUSING	
21.	822-069C	BEARING THRUST 1 ID X 2 ODX5/8	
22.	168-187D	MULTI GEAR PLATE GEAR	
23.	807-041C	SPRING GEARBOX CLUTCH	
24.	803-030C	NUT HEX JAM 1-8 PLT	
25.	890-353C	GEARBOX BEVEL GEAR KEY	
26.	168-188D	24T BEVEL PINNION GEAR	
27.	822-070C	BEARING BALL 1 ID X 2 OD X 5/8	
28.	168-157H	GEARBOX BEARING MOUNT	
29.	802-017C	HHCS 3/8-16X1 GR5	
30.	168-194H	GEARBOX SHIFT INDICATOR - FT	
31.	168-209D	GEAR INDICATOR SPACER	
32.	802-004C	HHCS 1/4-20X3/4 GR5	
33.	804-006C	WASHER LOCK SPRING 1/4 PLT	
34.	803-006C	NUT HEX 1/4-20 PLT	
35.	168-196H	GEARBOX SHIFTER/IND WLDMT FRNT	
36.	801-023C	SCREW SET SH 3/8-16X3/8 TYPE C	
37.	168-158H	SHIFT FORK	
38.	168-213D	GEARBOX INPUT SHAFT	
39.	800-066C	DRAIN PLUG 3/4-16 UNF PLATED	
40.	800-088C	SNAP RING INT 2.000	

Legend: ❶ = 1st revision; ❷ = 2nd revision; ❸ = 3rd revision; ✱ = use up existing stock; ⊗ = not interchangeable; ⊗ ❸ = for example: revision 2 is not interchangeable w/revision 1

Rear Gearbox (S/N Y1063+)

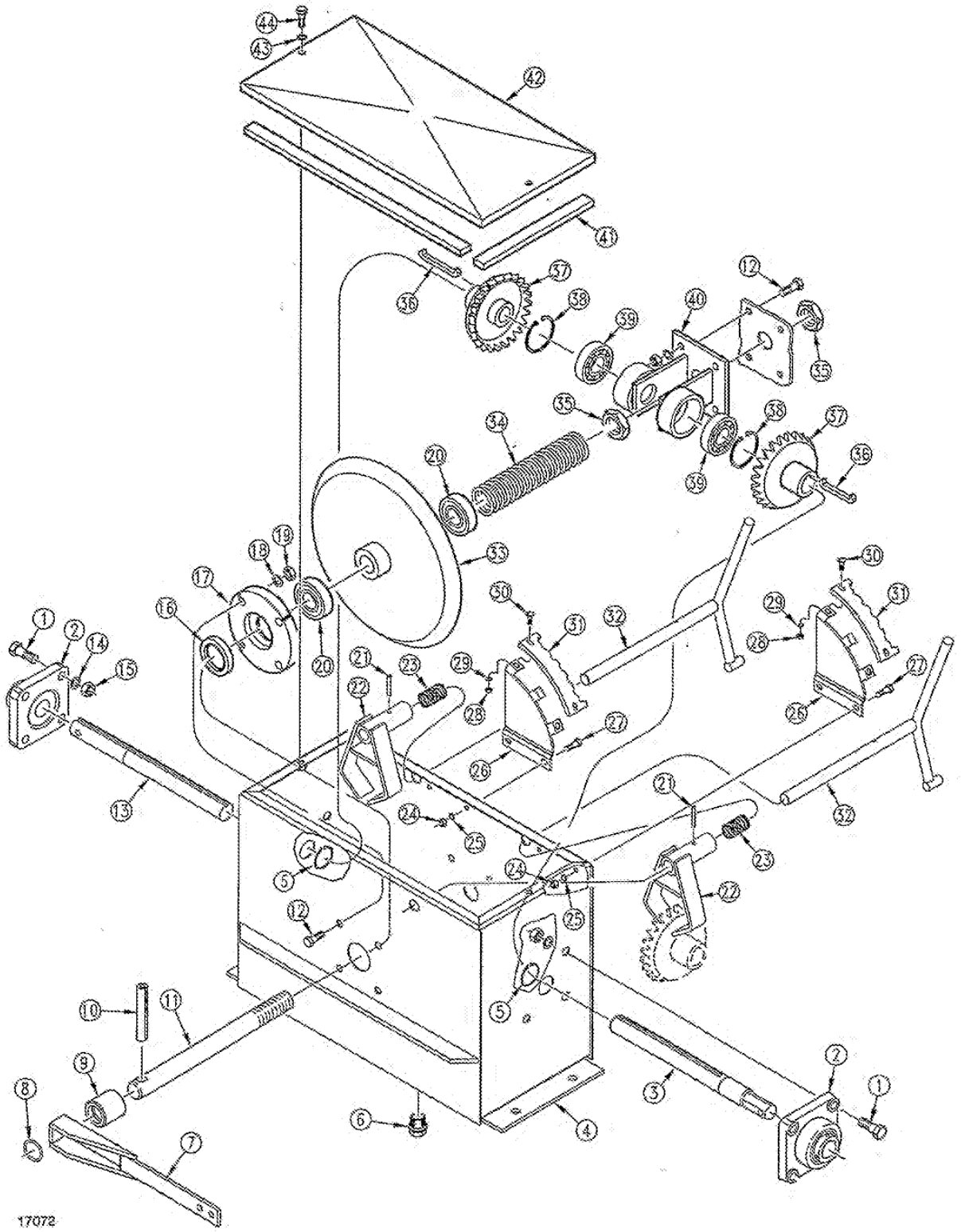

Rear Gearbox (S/N Y1063+)

Ref.	Part No.	Part Description	Comments
1.	802-029C	HHCS 7/16-14X1 1/2 GR5	
2.	822-074C	BEARING 4 BOLT CAM LOCK 1 BORE	
3.	168-300D	GEARBOX OUTPUT SHAFT W/HEX	
4.	168-268H	REAR GEARBOX HOUSING - NEW	
5.	800-021C	SNAP RING 1.000	
6.	800-066C	DRAIN PLUG 3/4-16 UNF PLATED	
7.	168-247H	GEARBOX SHIFT LINKAGE RAMP LG	
8.	816-166C	O-RING 1 ID X 1 1/4 OD X 1/8	
9.	168-283D	GEARBOX LEVER CLUTCH TUBE	
10.	805-169C	PIN ROLL 1/2 X 1 3/4	
11.	168-212D	PLATE GEAR SHAFT	
12.	802-079C	HHCS 3/8-16X1 1/4 GR5	
13.	168-213D	GEARBOX INPUT SHAFT	
14.	804-014C	WASHER LOCK 7/16 PLT	
15.	803-015C	NUT HEX 7/16-14 PLT	
16.	816-058C	SEAL OIL 1 1/2 X 2 1/8 X 5/16	
17.	168-208D	CLUTCH SEAL HOUSING	
18.	804-013C	WASHER LOCK SPRING 3/8 PLT	
19.	803-014C	NUT HEX 3/8-16 PLT	
20.	822-069C	BEARING THRUST 1 ID X 2 ODX5/8	
21.	805-022C	PIN ROLL 3/16 X 1 PLT	
22.	168-270H	SHIFT FORK - NEW	
23.	807-175C	SPRING COMP .796ODX.065WX1.22	
24.	803-006C	NUT HEX 1/4-20 PLT	
25.	804-006C	WASHER LOCK SPRING 1/4 PLT	
26.	168-376D	SHIFT INDICATOR VERT PLT REAR	
27.	802-004C	HHCS 1/4-20X3/4 GR5	
28.	803-001C	NUT HEX 10-24 PLT	
29.	804-054C	WASHER LOCK #10	
30.	801-003C	SCREW RD HD SLT 10-24X1/2 PLT	
31.	817-342C	GEARBOX SHIFT INDICATOR	
32.	168-274H	SHIFTER/INDICATOR FRT - NEW	
33.	168-187D	MULTI GEAR PLATE GEAR	
34.	807-041C	SPRING GEARBOX CLUTCH	
35.	803-030C	NUT HEX JAM 1-8 PLT	
36.	890-353C	GEARBOX BEVEL GEAR KEY	
37.	168-188D	24T BEVEL PINNION GEAR	
38.	800-088C	SNAP RING INT 2.000	
39.	822-070C	BEARING BALL 1 ID X 2 OD X 5/8	
40.	168-157H	GEARBOX BEARING MOUNT	
41.	990-024R	SEAL 5/16 X 3/4 DOR-TITE TRAY	
42.	168-164H	GEARBOX LID	
43.	804-009C	WASHER LOCK SPRING 5/16 PLT	
44.	802-087C	HHCS 5/16-18X1 SS	

Legend: ❶ = 1st revision; ❷ = 2nd revision; ❸ = 3rd revision; ● = use up existing stock; ⊘ = not interchangeable; ⊘ ❶ ❷ = for example: revision 2 is not interchangeable w/revision 1

Hydraulic System

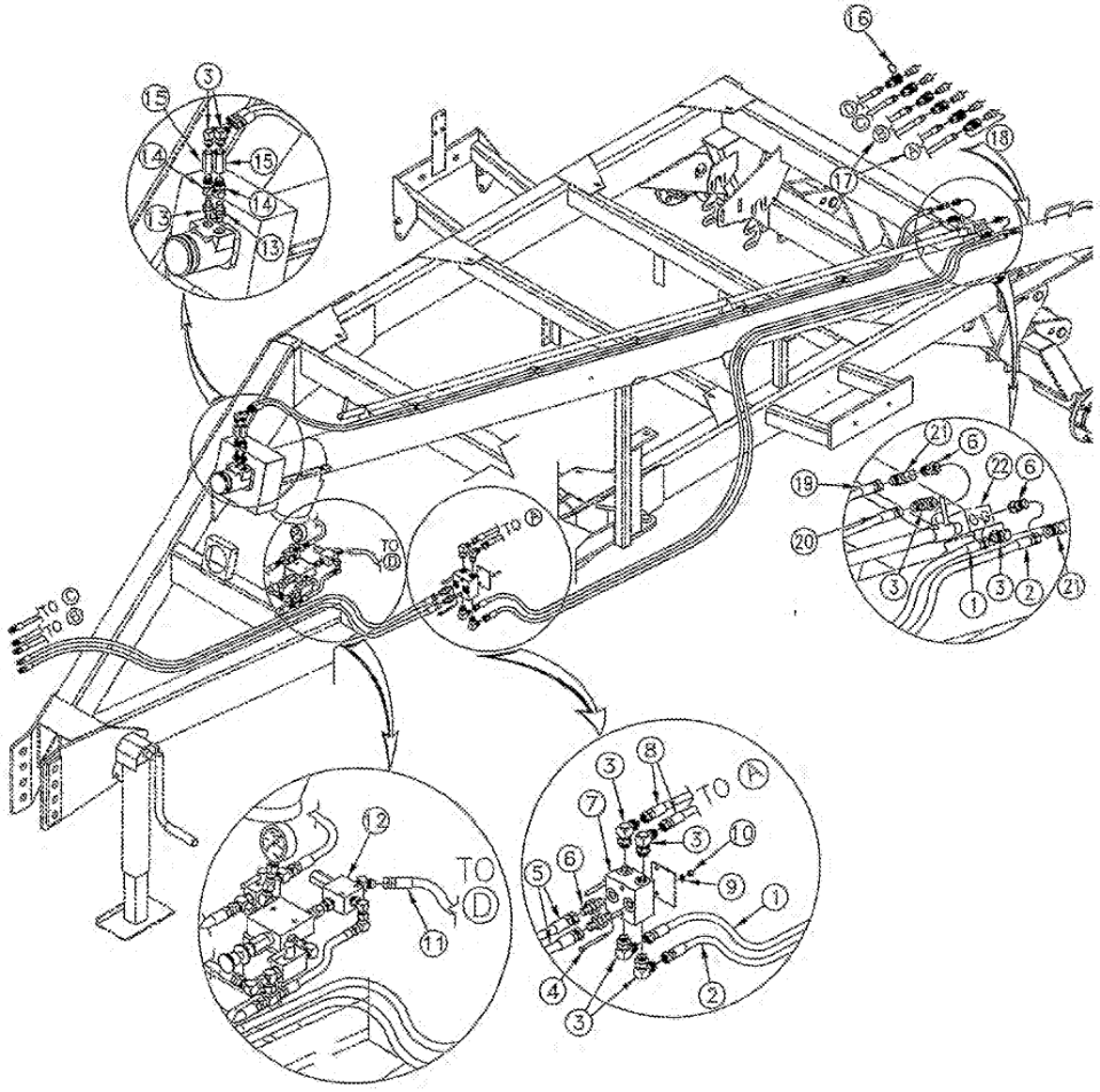

16224

Hydraulic System

Ref.	Part No.	Part Description	Comments
1.	811-650C	HH3/8R2 226 3/4FJIC	
2.	811-652C	HH3/8R2 228 3/4FJIC	
3.	811-063C	EL 3/4MJIC 3/4MORB	
4.	802-024C	HHCS 3/8-16X3 GR5	
5.	811-546C	HH3/8R2 159 1/2MNPT 3/4FJIC	
6.	811-088C	AD 3/4MORB 3/4MJIC	
7.	810-274C	DOUBLE SELECTOR VALVE 3/4FORB	Refer to page 6-8 for breakdown.
8.	811-666C	HH3/8R2 120 3/4FJIC 3/4MORB	
9.	804-013C	WASHER LOCK SPRING 3/8 PLT	
10.	803-014C	NUT HEX 3/8-16 PLT	
11.	811-681C	HH3/8R2 140 3/4MORB 9/16FJIC	(S/N Y1077-)
12.		NTA35 CONTROL VALVE	Refer to page 6-11 for breakdown. (S/N Y1077-)
13.	811-192C	AD 3/4MJIC 7/8MORB	
14.	811-324C	AD 3/4MORB 3/4FJIC	
15.	811-488C	CP 3/4 FORB 3/4 FORB	
16.	800-044C	SNAP RING EXT 1 1/2 SHAFT	
17.	811-649C	HH3/8R2 275 1/2MNPT 3/4MORB	
18.	811-204C	CP 3/4FORB QD BH	
19.	811-653C	HH3/8R2 156 3/4FJIC	
20.	811-651C	HH3/8R2 154 3/4FJIC	
21.	811-150C	EL 3/4FJIC 3/4MJIC	
22.	810-268C	VALVE 4 WAY 3 POS OP CEN DIR	Refer to page 6-10 for breakdown.

Legend: ① = 1st revision; ② = 2nd revision; ③ = 3rd revision; ✱ = use up existing stock; ⊗ = not interchangeable; ② ① ③ = for example: revision 2 is not interchangeable w/revision 1

UM-PK0000895

Hydraulic System

Ref.	Part No.	Part Description	Comments
1.	811-650C	HH3/8R2 226 3/4FJIC	
2.	811-652C	HH3/8R2 228 3/4FJIC	
3.	811-063C	EL 3/4MJIC 3/4MORB	
4.	802-024C	HHCS 3/8-16X3 GR5	
5.	811-548C	HH3/8R2 159 1/2MNPT 3/4FJIC	
6.	811-088C	AD 3/4MORB 3/4MJIC	
7.	810-274C	DOUBLE SELECTOR VALVE 3/4FORB	Refer to page 6-8 for breakdown.
8.	811-666C	HH3/8R2 120 3/4FJIC 3/4MORB	
9.	804-013C	WASHER LOCK SPRING 3/8 PLT	
10.	803-014C	NUT HEX 3/8-16 PLT	
11.	811-681C	HH3/8R2 140 3/4MORB 9/16FJIC	(S/N Y1077-)
12.		NTA35 CONTROL VALVE	Refer to page 6-11 for breakdown. (S/N Y1077-)
13.	811-192C	AD 3/4MJIC 7/8MORB	
14.	811-324C	AD 3/4MORB 3/4FJIC	
15.	811-488C	CP 3/4 FORB 3/4 FORB	
16.	800-044C	SNAP RING EXT 1 1/2 SHAFT	
17.	811-649C	HH3/8R2 275 1/2MNPT 3/4MORB	
18.	811-204C	CP 3/4FORB QD BH	
19.	811-653C	HH3/8R2 156 3/4FJIC	
20.	811-651C	HH3/8R2 154 3/4FJIC	
21.	811-150C	EL 3/4FJIC 3/4MJIC	
22.	810-268C	VALVE 4 WAY 3 POS OP CEN DIR	Refer to page 6-10 for breakdown.

Legend: ❶ = 1st revision; ❷ = 2nd revision; ❸ = 3rd revision; ✱ = use up existing stock; ⊗ = not interchangeable; ❶ ❷ ⊗ = for example: revision 2 is not interchangeable w/revision 1

UM-PK0000896

Fan Hydraulic System (S/N Y10[illegible])

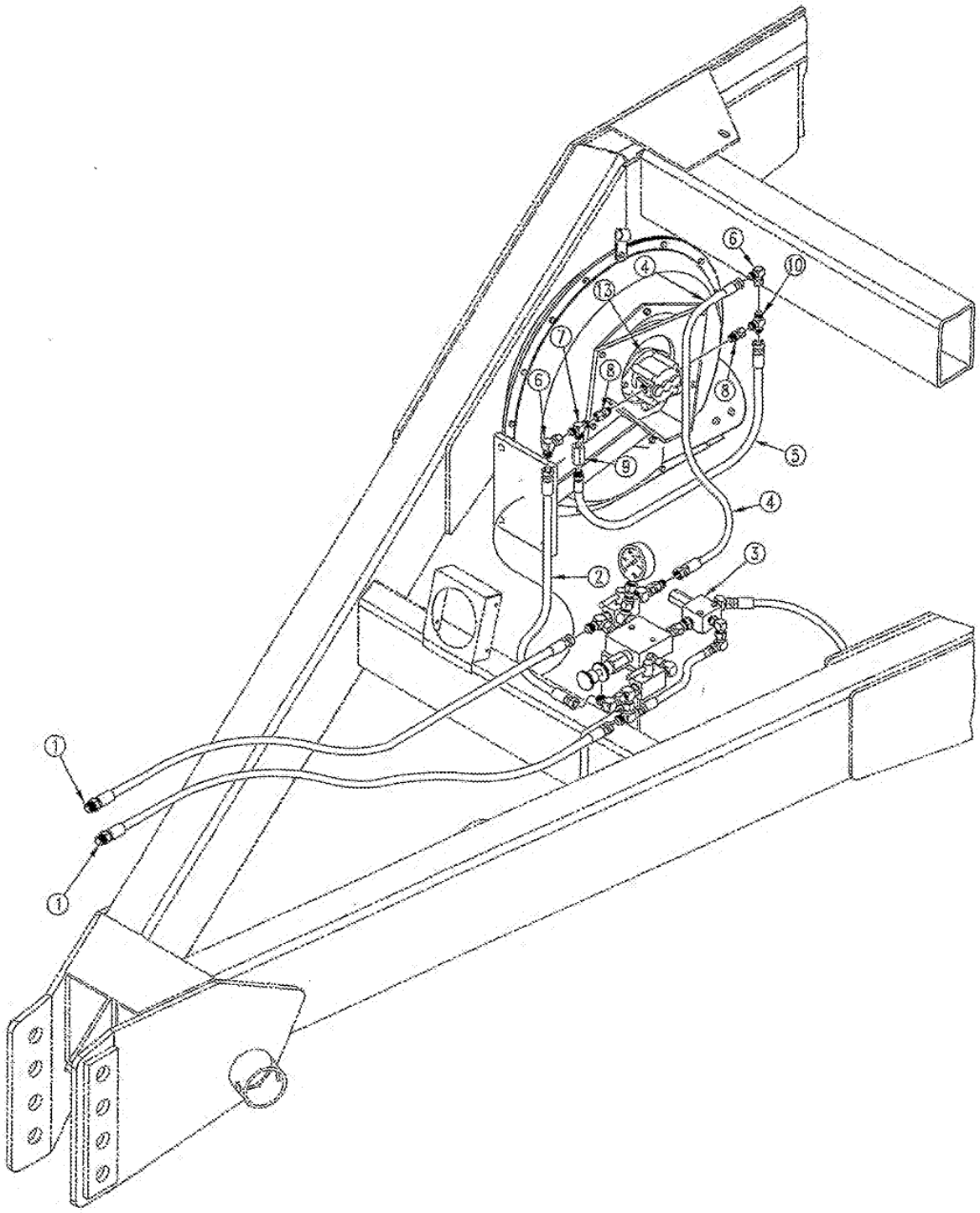

16246

UM-PK0000897

Fan Hydraulic System (S/N Y1077-)

Ref.	Part No.	Part Description	Comments
1.	811-516C	HH1/2R2 142 3/4FJIC 1/2MNPT	
2.	811-679C	HH1/2R2 28 3/4FJIC 3/4FJIC	
3.		NTA35 CONTROL VALVE SUB ASSY	Refer to page 6-11 for breakdown.
4.	811-680C	HH1/2R2 11 3/4FJIC 3/4FJIC	
5.	811-195C	HH1/2R1 028 3/4FJIC 3/4MORB	
6.	811-150C	EL 3/4FJIC 3/4MJIC	
7.	811-077C	TE 3/4MORB 3/4MJIC 3/4MJIC	
8.	811-502C	AD 7/8MORB 3/4FJIC	
9.	810-037C	VALVE LINE CHECK	
10.	811-078C	TE 3/4MJIC	
11.	811-503C	EL 3/4FJIC 1/8NPTF	No longer available.
12.	823-083C	PRESSURE SWITCH 800# NO	No longer available.
13.	810-273C	HYD MOTOR 7/8ORBF	

Legend: ❶ = 1st revision; ❷ = 2nd revision; ❸ = 3rd revision; ● = use up existing stock; ⊗ = not interchangeable; ⊗ ❶ ❷ = for example: revision 2 is not interchangeable w/revision 1

UM-PK0000898

Fan Hydraulic System (S/N Y10[illegible])

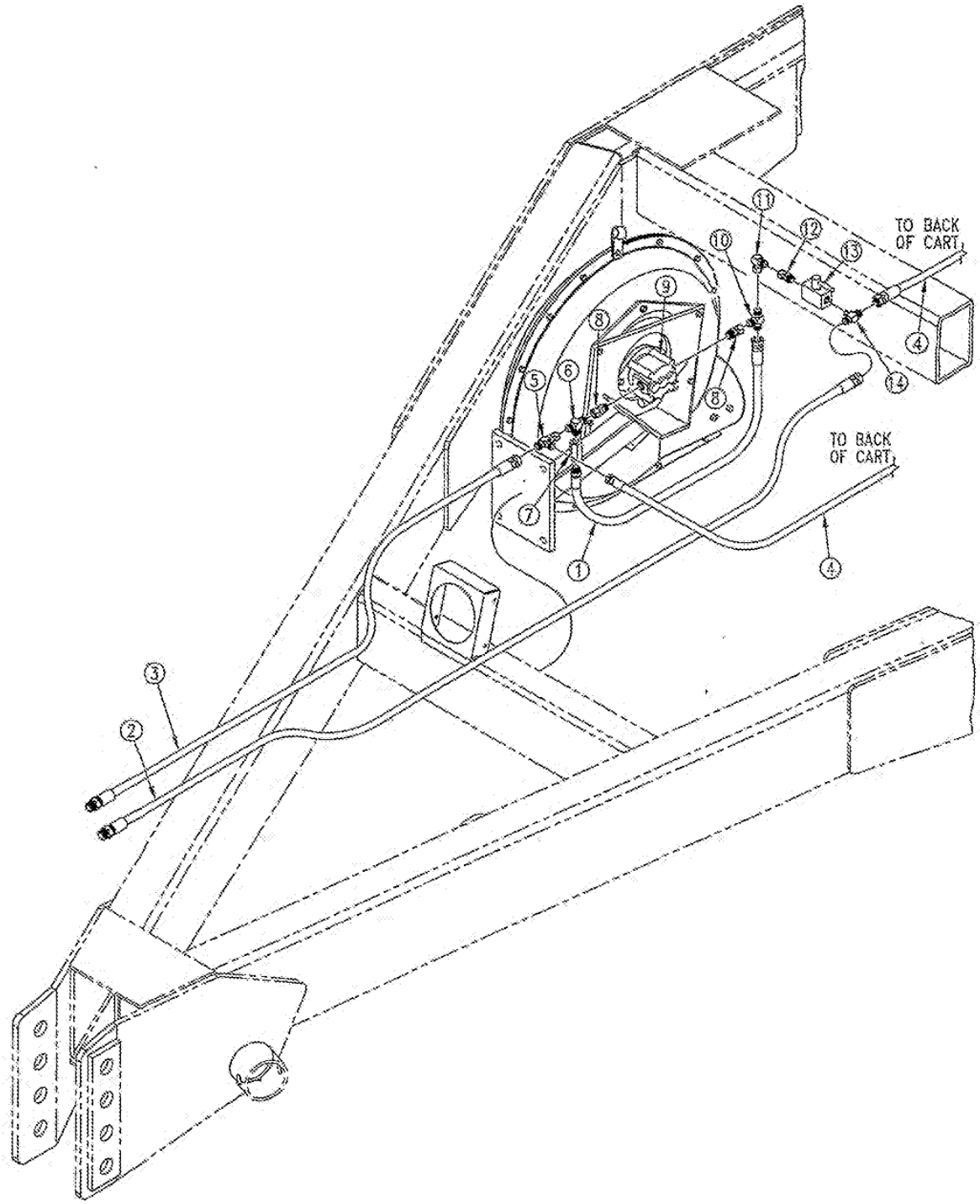

UM-PK0000899

Fan Hydraulic System (S/N Y[illegible]/8+)

Ref.	Part No.	Part Description	Comments
1.	811-195C	HH1/2R1 028 3/4FJIC 3/4MORB	
2.	811-515C	HH1/2R2 150 3/4FJIC 1/2MNPT	
3.	811-516C	HH1/2R2 142 3/4FJIC 1/2MNPT	
4.	811-548C	HH3/8R2 159 1/2MNPT 3/4FJIC	
5.	811-073C	TE 3/4MJIC 3/4MJIC 3/4FJIC	
6.	811-077C	TE 3/4MORB 3/4MJIC 3/4MJIC	
7.	810-037C	VALVE LINE CHECK	
8.	811-502C	AD 7/8MORB 3/4FJIC	
9.	810-273C	HYD MOTOR 7/8ORBF	
10.	811-147C	CR 3/4MJIC	
11.	811-150C	EL 3/4FJIC 3/4MJIC	
12.	811-324C	AD 3/4MORB 3/4FJIC	
13.	810-345C	VALVE 90 DEGREE SHUT-OFF	
14.	811-077C	TE 3/4MORB 3/4MJIC 3/4MJIC	
15.	811-503C	EL 3/4FJIC 1/8NPTF	
16.	823-083C	PRESSURE SWITCH 800# NO	

Legend: ❶ = 1st revision; ❷ = 2nd revision; ❸ = 3rd revision; ● = use up existing stock; ⊗ = not interchangeable; ⊗ ❶ ❷ = for example: revision 2 is not interchangeable w/revision 1

Double Selector Valve (810-274C)

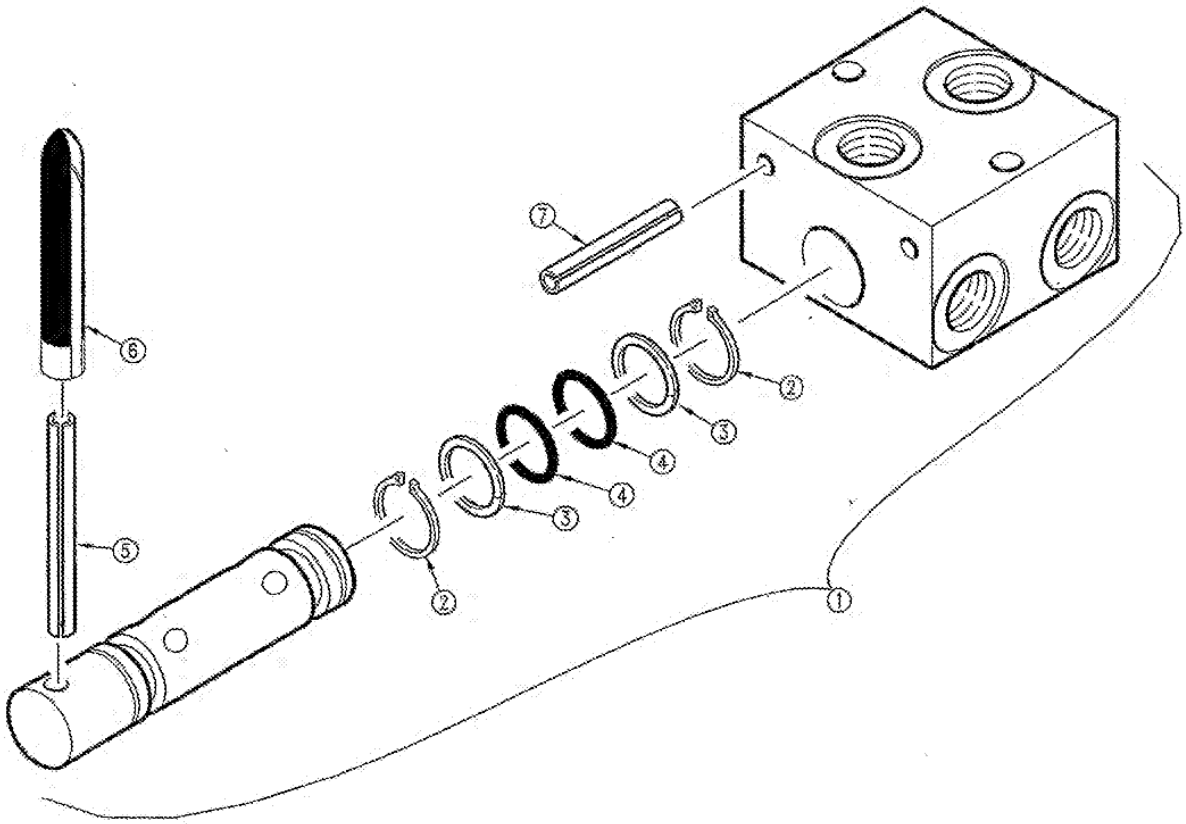

14927

UM-PK0000901
Unverferth Ex. 2025 - Page 84

Double Selector Valve (810-274C)

Ref.	Part No.	Part Description	Comments
1.	810-274C	DOUBLE SELECTOR VALVE 3/4FORB	
2.	1079	SH RETAINING RING TRU ARC	
3.	1089-210	SHOEMAKER TEFLON BACK UP	
4.	1088-210	SHOEMAKER O-RING BUNA N 70DURO	
5.	1285	SH GROOVE PIN	
6.	817-255C	BLACK VINYL GRIP	
7.	1084	SH PIN, SPRING 0.25 DIAMETER	

Legend: ❶ = 1st revision; ❷ = 2nd revision; ❸ = 3rd revision; ● = use up existing stock; ⊗ = not interchangeable; ❷ ❶ ❷ = for example: revision 2 is not interchangeable w/revision 1

Valve 4Way 3Pos Op Cen Dir (81[illegible]-268C)

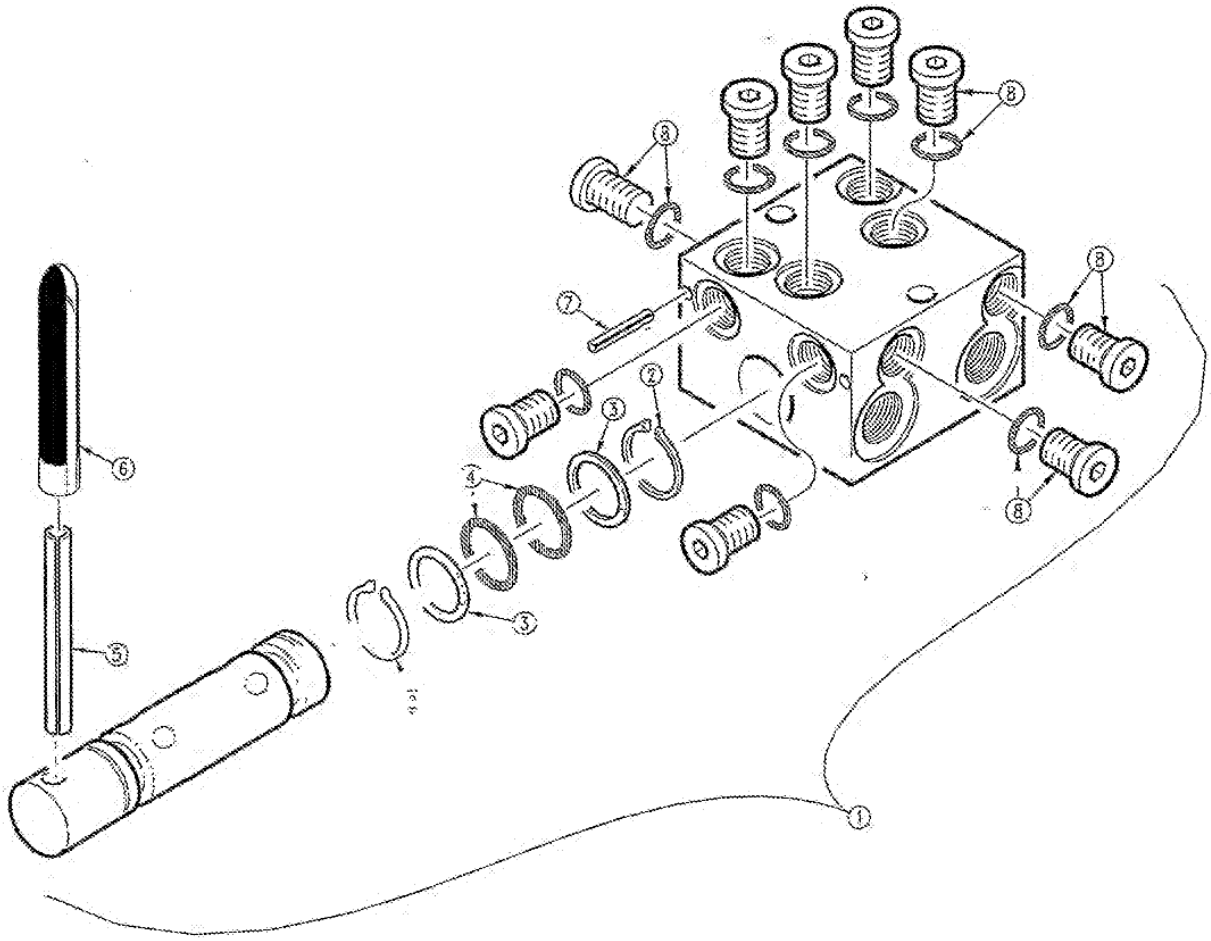

UM-PK0000903

Valve 4Way 3Pos Op Cen Dir (810-268C)

Ref.	Part No.	Part Description	Comments
1.	810-268C	VALVE 4 WAY 3 POS OP CEN DIR	
2.	1079	SH RETAINING RING TRU ARC	
3.	1089-210	SHOEMAKER TEFLON BACK UP	
4.	1088-210	SHOEMAKER O-RING BUNA N 70DURO	
5.	1285	SH GROOVE PIN	
6.	817-255C	BLACK VINYL GRIP	
7.	1284	SHOEMAKER STOP PIN	
8.	1132-4	SHOEMAKER PLUG, HEX SOCKET	

Legend: ❶ = 1st revision; ❷ = 2nd revision; ❸ = 3rd revision; ● = use up existing stock; ⊗ = not interchangeable; ⊗ ❶ ❷ = for example: revision 2 is not interchangeable w/revision 1

NTA35 Control Valve (S/N Y1077

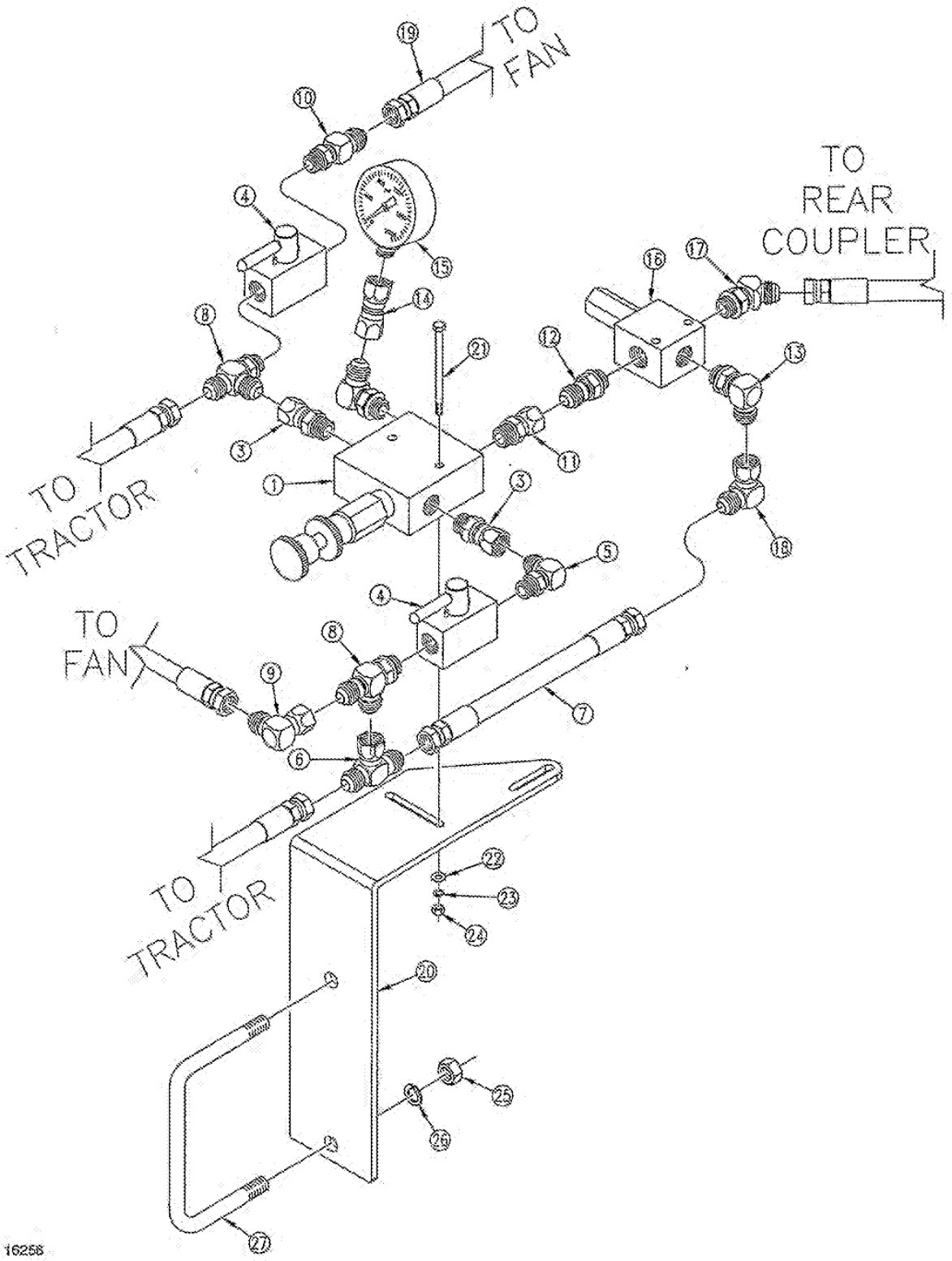

UM-PK0000905

NTA35 Control Valve (S/N Y 7-)

Ref.	Part No.	Part Description	Comments
1.	810-349C	VALVE PRESS RED W/ CHK 1/16 OR	Refer to page 6-14 for breakdown.
2.	811-078C	TE 3/4MJIC	
3.	811-282C	AD 3/4FJIC 9/16MORB	
4.	810-345C	VALVE 90 DEGREE SHUT-OFF	
5.	811-063C	EL 3/4MJIC 3/4MORB	
6.	811-079C	TE 3/4FJIC 3/4MJIC 3/4MJIC	
7.	811-678C	HH3/8R2 8 1/2 3/4FJIC 9/16FJIC	
8.	811-080C	TE 3/4MJIC 3/4MORB 3/4MJIC	
9.	811-150C	EL 3/4FJIC 3/4MJIC	
10.	811-088C	AD 3/4MORB 3/4MJIC	
11.	811-627C	AD 9/16MORB 9/16FJIC	
12.	811-170C	AD 9/16MORB 9/16MJIC	
13.	811-065C	EL 9/16MJIC 9/16MORB	
14.	811-582C	AD 9/16FJIC 1/4FNPT	
15.	810-347C	PRESSURE GAUGE 2000 PSI	
16.	810-348C	RELIEF VALVE 1500 PSI TAMP PRF	Refer to page 6-16 for breakdown.
17.	811-416C	EL 45 9/16MJIC 9/16MORB	
18.	811-169C	EL 9/16MJIC 9/16FJIC	
19.	811-680C	HH1/2R2 11 3/4FJIC 3/4FJIC	
20.	167-171D	NTA35 VALVE MOUNT PLATE	
21.	802-551C	HHCS 1/4-20X2 1/4 GR5	
22.	804-007C	WASHER FLAT 1/4 SAE PLT	
23.	804-006C	WASHER LOCK SPRING 1/4 PLT	
24.	803-006C	NUT HEX 1/4-20 PLT	
25.	803-020C	NUT HEX 1/2-13 PLT	
26.	804-015C	WASHER LOCK SPRING 1/2 PLT	
27.	808-067C	U-BOLT 1/2-13 X 6 1/32 X 4 1/4	

Legend: ❶ = 1st revision; ❷ = 2nd revision; ❸ = 3rd revision; ✱ = use up existing stock; ⊗ = not interchangeable; ⊗ ❶ ❷ = for example: revision 2 is not interchangeable w/revision 1

Pressure Reducing Valve (810-3[illegible]C)

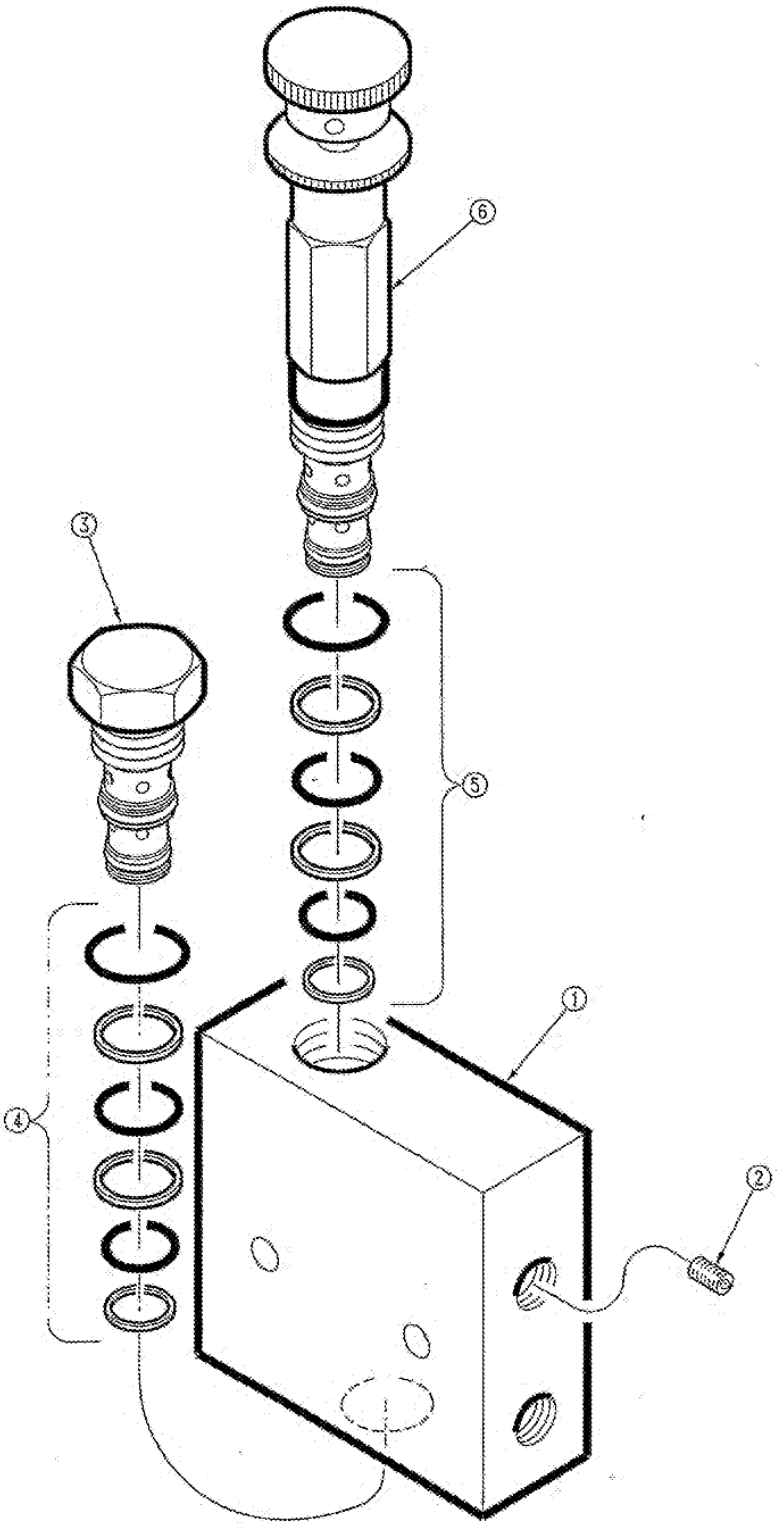

18442

UM-PK0000907
Unverferth Ex. 2025 - Page 90

Pressure Reducing Valve (81[illegible]349C)

Ref.	Part No.	Part Description	Comments
1.	5089	VALVE BODY PRV W/CHECK SHOEMKR	
2.	5106	PLUG, WITH .062 ORIFICE	
3.	CP2-10	CARTRIDGE CHECK SHOEMAKER	
4.	5070	SEAL KIT CHECK VALVE SHOEMAKER	
5.	5075	SEAL KIT PRESS RED V SHOEMAKER	
6.	PRPIL-10-K-25	CARTRIDGE PRESS RED SHOEMAKER	

Legend: ❶ = 1st revision; ❷ = 2nd revision; ❸ = 3rd revision; ● = use up existing stock; ⊘ = not interchangeable; ⊘ ❶ ❷ = for example: revision 2 is not interchangeable w/revision 1

Relief Valve (810-348C)

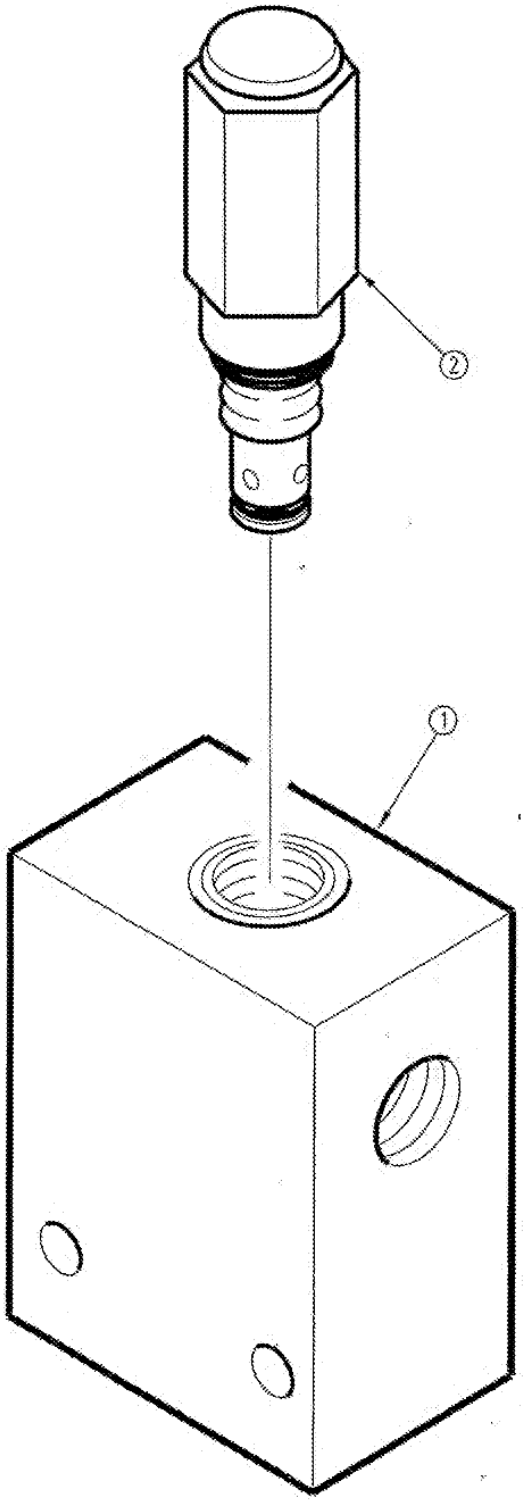

16441

UM-PK0000909

Relief Valve (810-348C)

Ref.	Part No.	Part Description	Comments
1.	30102322	DELTA 3 PORT RELIEF VALVE BODY	
2.	85020105	DELTA RELIEF VALVE CARTRIDGE-1500 PSI	

Legend: ❶ = 1st revision; ❷ = 2nd revision; ❸ = 3rd revision; ✱ = use up existing stock; ⊗ = not interchangeable; ⊗ ① ❷ = for example: revision 2 is not interchangeable w/revision 1

UM-PK0000910

Auger

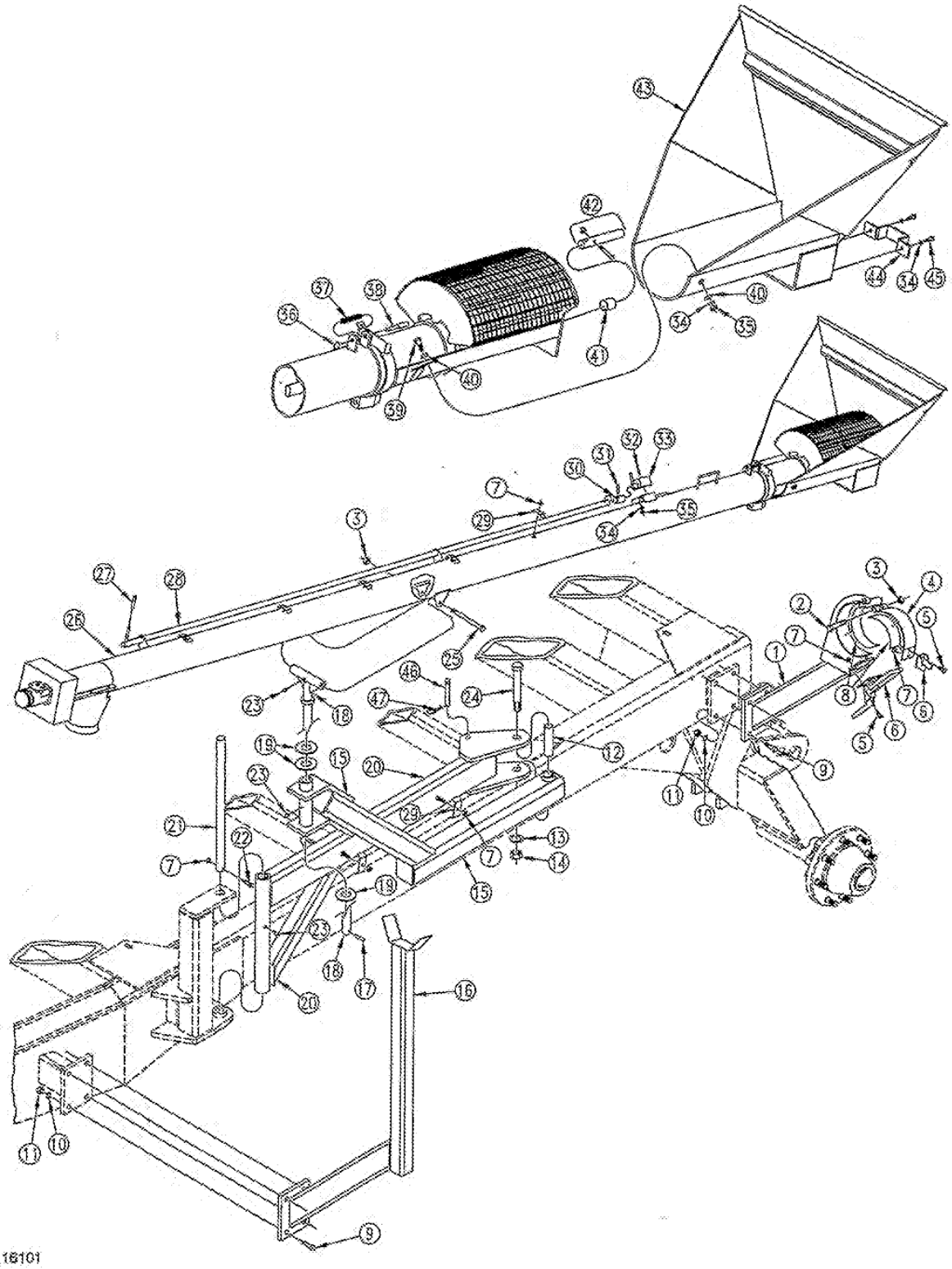

UM-PK0000911

Auger

Ref.	Part No.	Part Description	Comments
1.	166-125H	2220 REAR TRANSPORT SUPPORT	
2.	802-226C	HHCS 1/2-13X2 3/4 GR5	
3.	803-019C	NUT LOCK 1/2-13 PLT	
4.	166-126H	2220 RR TRANSPORT LATCH WLDMNT	
5.	802-007C	HHCS 5/16-18X3/4 GR5	
6.	800-285C	AUGER LATCH CLAMP	
7.	803-011C	NUT LOCK 5/16-18 PLT	
8.	816-203C	AUGER CLAMP PAD - INSIDE	
9.	802-082C	HHCS 1/2-13X1 3/4 GR5	
10.	804-015C	WASHER LOCK SPRING 1/2 PLT	
11.	803-020C	NUT HEX 1/2-13 PLT	
12.	166-512D	2220 OUTER PIVOT SPACER TUBE	
13.	804-023C	WASHER LOCK SPRING 3/4 PLT	
14.	803-027C	NUT HEX 3/4-10 PLT	
15.	166-109H	OUTER SUPPORT ARM WELDMENT	
16.	166-108H	2220 AUGER STORAGE SUPPRT FRNT	
17.	805-249C	PIN ROLL 3/8 X 2 PLT	
18.	166-124H	2220 AUGER SWIVEL SUPPORT	
19.	804-029C	WASHER FLAT 1 SAE	
20.	166-110H	INNER SUPPORT ARM WELDMENT	
21.	166-463D	INNER SUPPORT ARM SHAFT - LONG	
22.	802-115C	HHCS 5/16-18X2 GR5	
23.	800-001C	GREASE ZERK STRAIGHT 1/4-28	
24.	802-070C	HHCS 3/4-10X6 GR5	
25.	802-047C	HHCS 1/2-13X6 GR5	
26.	166-113H	6 IN AUGER WLDMNT 2220	
27.	817-255C	BLACK VINYL GRIP	
28.	166-123H	2220 AUGER VALVE REMOTE HANDLE	
29.	166-300D	AUGER HOSE SUPPORT CLAMP	
30.	166-293D	AUGER VALVE LINK COUPLER	
31.	805-189C	PIN ROLL 5/16 X 1 1/4 PLT	
32.	802-172C	HHCS 5/16-18X2 1/2 GR5	
33.	810-288C	VALVE 4 WAY 3 POS OP CEN DIR	
34.	804-009C	WASHER LOCK SPRING 5/16 PLT	
35.	803-008C	NUT HEX 5/16-18 PLT	
36.	800-051C	RING, SPLIT 1-1/4 I.D.	
37.	807-031C	MARKER LOCK SPRING	
38.	113-164D	MARKER LOCK PIN	
39.	802-159C	HHCS 5/16-18X1 GR5	
40.	804-036C	WASHER FLAT 5/16 SAE PLT	
41.	890-417C	AUGER FLIGHTING BUSH - BRONZE	
42.	10084XX	6 IN AUGER TAIL STUB	
43.	166-405D	8 A.D. AUGER HOPPER W/HOLES	
44.	166-413D	AUGER STRAP HANDLE	
45.	802-010C	HHCS 5/16-18X1 1/4 GR5	
46.	805-252C	PIN CLEVIS 1/2 X 6	
47.	805-032C	PIN HAIR COTTER .148 WIRE	

Legend: ❶ = 1st revision; ❷ = 2nd revision; ❸ = 3rd revision; ✱ = use up existing stock; ⊘ = not interchangeable; ❷ ❶ ❸ = for example: revision 2 is not interchangeable w/revision 1

Auger Hydraulic Drive

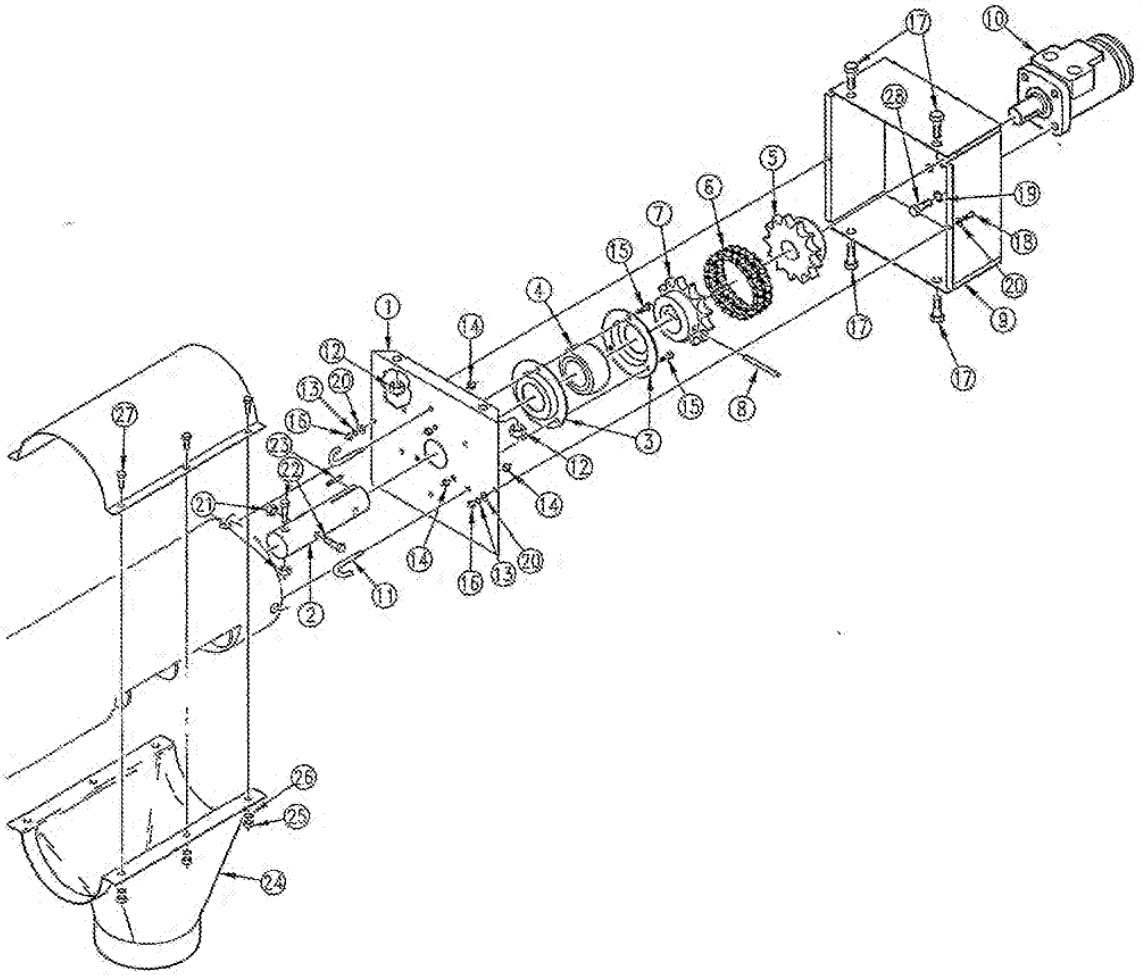

16309

UM-PK0000913
Unverferth Ex. 2025 - Page 96

Auger Hydraulic Drive

Ref.	Part No.	Part Description	Comments
1.	1008493	HEAD PLATE FOR 6 IN HYD AUGER	
2.	1008495	6 IN AUGER HEAD STUB	
3.	54008	FLANDETTE BRG 1 IN - 3 HOLE	
4.	6382C	BEARING 1 IN SPHERICAL	
5.	3198A1	FLEX COUPLER HALF 1	
6.	3148A91	FLEX COUPLER CHAIN	
7.	41478	FLEX COUPLER HALF 1 1/4	
8.	6318C	PIN ROLL 3/8 X 2	
9.	1004175	HYD MOTER MOUNT WLDMT	
10.	810-267C	HYD MOTOR 7/8 ORBF	
11.	835128	J-BOLT 5/16	
12.	803-147C	NUT HEX NYLOCK 1/2-13	
13.	804-006C	WASHER LOCK SPRING 1/4 PLT	
14.	803-084C	NUT HEX NYLOCK 5/16-18 PLT	
15.	802-092C	RHSNB 5/16-18X3/4 GR5	
16.	803-006C	NUT HEX 1/4-20 PLT	
17.	802-258C	HHCS 1/2-13X1 GR5	
18.	802-004C	HHCS 1/4-20X3/4 GR5	
19.	804-013C	WASHER LOCK SPRING 3/8 PLT	
20.	804-007C	WASHER FLAT 1/4 SAE PLT	
21.	803-078C	NUT LOCK 3/8-16 NYLON INSERT	
22.	802-024C	HHCS 3/8-16X3 GR5	
23.	168-276D	KEY 1/4 X 1/4 X 1 3/8 LG	
24.	6514A1	6 IN - 90 DISCHARGE SPOUT	
25.	803-008C	NUT HEX 5/16-18 PLT	
26.	804-009C	WASHER LOCK SPRING 5/16 PLT	
27.	802-473C	HHCS 5/16-18X2 FTHD	
28.	802-014C	HHCS 3/8-16X3/4 GR5	

Legend: ❶ = 1st revision; ❷ = 2nd revision; ❸ = 3rd revision; ● = use up existing stock; ⊗ = not interchangeable; ❷ ❶ ❷ = for example revision 2 is not interchangeable w/revision 1

Decal Placement

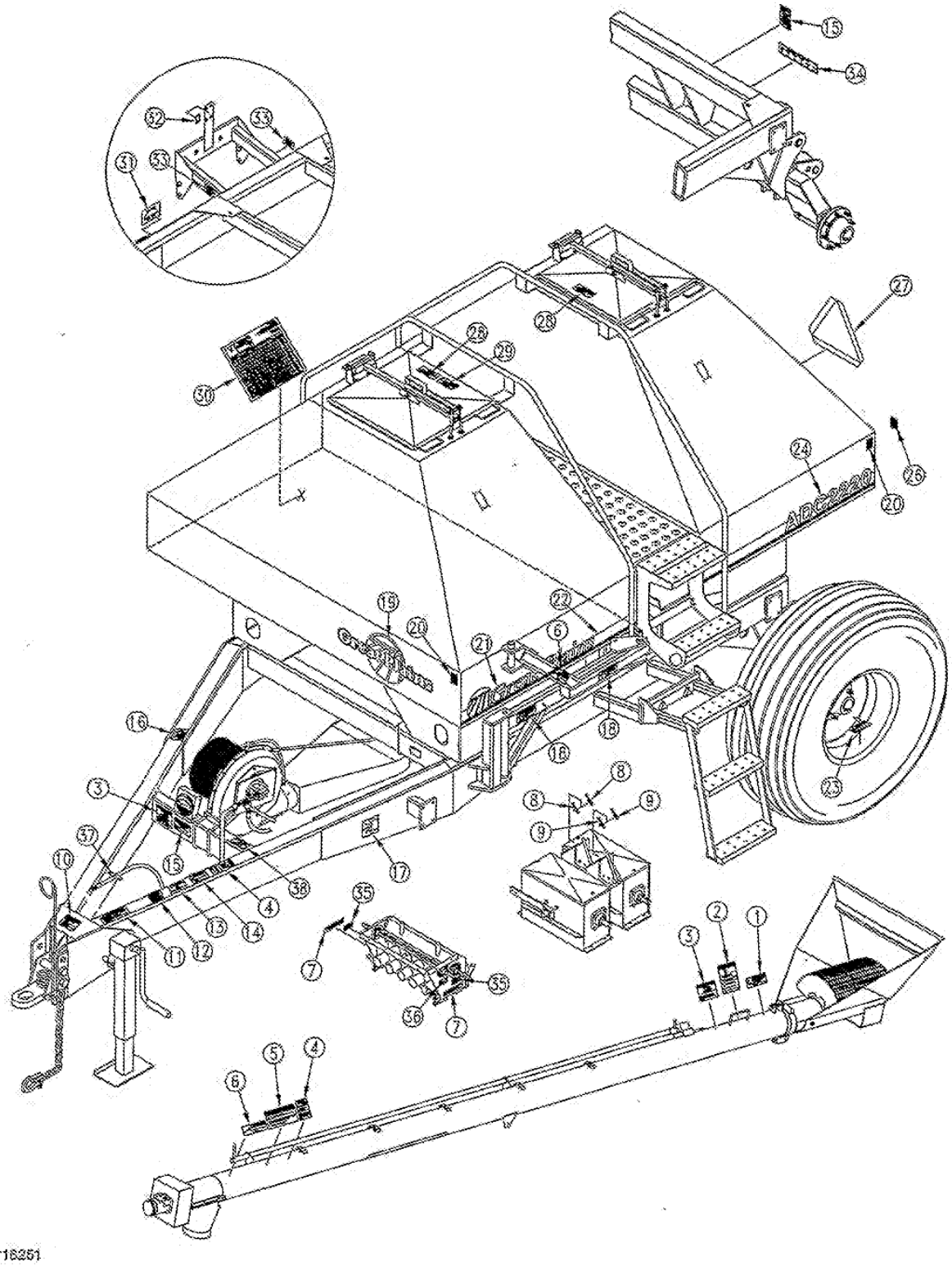

Decal Placement

Ref.	Part No.	Part Description	Comments
1.	818-633C	DECAL DANGER GUARD MISSING AUG	
2.	818-634C	DECAL DANGER AD ROTATING AUGER	
3.	818-627C	DECAL DANGER ELECTROCUTION AUG	
4.	818-339C	DECAL WARNING HIGH PRESSUR SML	
5.	818-635C	DECAL CAUTION AD AUGER GENERAL	
6.	818-622C	DECAL WARNING OVERHEAD AUGER	
7.	818-620C	DECAL METER BOX LID NOTICE	
8.	818-654C	DECAL A.D. GBX LTTER INDICATOR	
9.	818-653C	DECAL A.D. GBX NMBER INDICATOR	
10.	818-667C	DECAL CAUTION 2250 AD TOWING	
11.	818-188C	DECAL WARNING 20 MPH TRANS LRG	
12.	818-630C	DECAL CAUTION AD GENERAL INST	
13.	818-557C	DECAL DANGER CANNOT READ ENG	
14.	818-560C	DECAL NOTICE TO OWNER-NO WARRA	
15.	818-625C	DECAL NOTICE TRACTOR HYD AD95	
16.	818-632C	DECAL WARNING AD FAN HAZARD	
17.	818-772C	DECAL AUGER - MARKER	
18.	818-623C	DECAL WARNING PINCH POINT AUG	
19.	❷ 838-228C	**DECAL GREAT PLAINS ON LOGO SML**	
	❶ 818-598C	**DECAL GP LOGO - LARGE**	
20.	818-229C	DECAL AMBER REFLECTOR	
21.	❷ 838-168C	**DECAL LOGO&GP F/STRIPE 6 X 35**	
	❶ 818-594C	**DECAL GREAT PLAINS**	
22.	❷ 838-160C	**DECAL 3 COLOR STRIPE 2.50 WIDE**	
	❶ 818-597C	**DECAL 4 COLOR STRIPE**	
23.	818-789C	DECAL CAUTION 28 PSI 110 TORQ	
24.	❷ 838-212C	**DECAL ADC2220**	
	❶ 818-720C	**DECAL 2220**	
25.	818-595C	DECAL AIR DRILL	No longer available.
26.	818-230C	DECAL RED REFLECTOR	
27.	818-003C	DECAL SLOW MOVING VEHICLE	
28.	818-628C	DECAL WARNING AD BIN HAZARDS	
29.	818-188C	DECAL CAUTION AIR LEAKS	
30.	818-773C	DECAL SEED RATE ADC2220	
31.	818-774C	DECAL CALIBRATION ADC2220	
32.	818-651C	DECAL 2250 A.D. SHIFT LEVERS	
33.	818-776C	DECAL ADC2220 CLUTCH LEVERS	
34.	818-814C	DECAL NTA35 HOSE CONN INST	(S/N Y1077-)
	818-865C	DECAL 1150/2220 HOSE CONN	(S/N Y1078+)
35.	838-041C	DECAL DRIVEN	
36.	838-042C	DECAL DRIVING	
37.	818-882C	DECAL SUMP	
38.	818-795C	DECAL SEL VALVE FOLD/FIELD	

Legend: ❶ = 1st revision; ❷ = 2nd revision; ❸ = 3rd revision; ✱ = use up existing stock; ⊗ = not interchangeable; ❷ ❶ ⊗ = for example: revision 2 is not interchangeable w/revision 1

EXHIBIT 6

US007267519B2

(12) **United States Patent**
Cresswell et al.

(10) **Patent No.: US 7,267,519 B2**
(45) **Date of Patent: Sep. 11, 2007**

(54) **LOADING CONVEYOR WITH FOLDING HOPPER FOR AGRICULTURAL COMMODITY CARTS**

(75) Inventors: **Mark Cresswell**, St. Brieux (CA); **Scot Jagow**, St. Brieux (CA); **Bob Cochran**, St. Brieux (CA); **Dean Thomas**, St. Brieux (CA)

(73) Assignee: **Bourgault Industries Ltd.**, St. Brieux, Saskatchewan (CA)

(*) Notice: Subject to any disclaimer, the term of this patent is extended or adjusted under 35 U.S.C. 154(b) by 395 days.

(21) Appl. No.: **10/832,024**

(22) Filed: **Apr. 26, 2004**

(65) **Prior Publication Data**

US 2005/0238469 A1 Oct. 27, 2005

(51) **Int. Cl.**
A01D 90/00 (2006.01)

(52) **U.S. Cl.** **414/526**; 414/488; 414/502; 198/313; 198/586; 198/668

(58) **Field of Classification Search** 414/475, 414/486, 488, 502, 507, 526; 198/313, 586, 198/668

See application file for complete search history.

(56) **References Cited**

U.S. PATENT DOCUMENTS

4,427,105 A * 1/1984 Hawley et al. 198/632
4,669,943 A * 6/1987 Pollard et al. 414/505
5,538,388 A * 7/1996 Bergkoog et al. 414/523
5,980,189 A * 11/1999 Rubner 414/505

FOREIGN PATENT DOCUMENTS

CA 2357048 6/2000

* cited by examiner

Primary Examiner—David H. Bollinger
Assistant Examiner—M. S Lowe

(57) **ABSTRACT**

An agricultural commodity cart loading conveyor apparatus comprises a conveyor mounted to an agricultural commodity cart. A hopper is pivotally attached to the lower end of the conveyor tube and a hopper conveyor section is mounted along a bottom of the hopper. The hopper pivots from an extended position to a folded position. In the extended position the hopper is oriented at an angle to the conveyor tube such that the hopper extends along the ground when the conveyor is in the operating position, and is connected to the lower end of the conveyor tube such that the hopper conveyor section conveys material entering the hopper into the lower end of the conveyor tube for conveyance up the conveyor tube. A lock is operative to lock the hopper and conveyor together when the hopper is in the extended position. Hydraulic cylinders can be provided to facilitate use with larger conveyors.

10 Claims, 11 Drawing Sheets

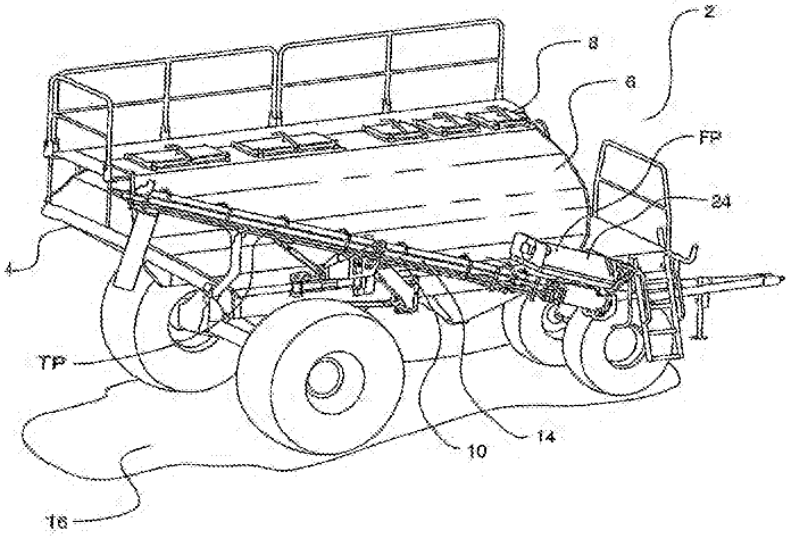

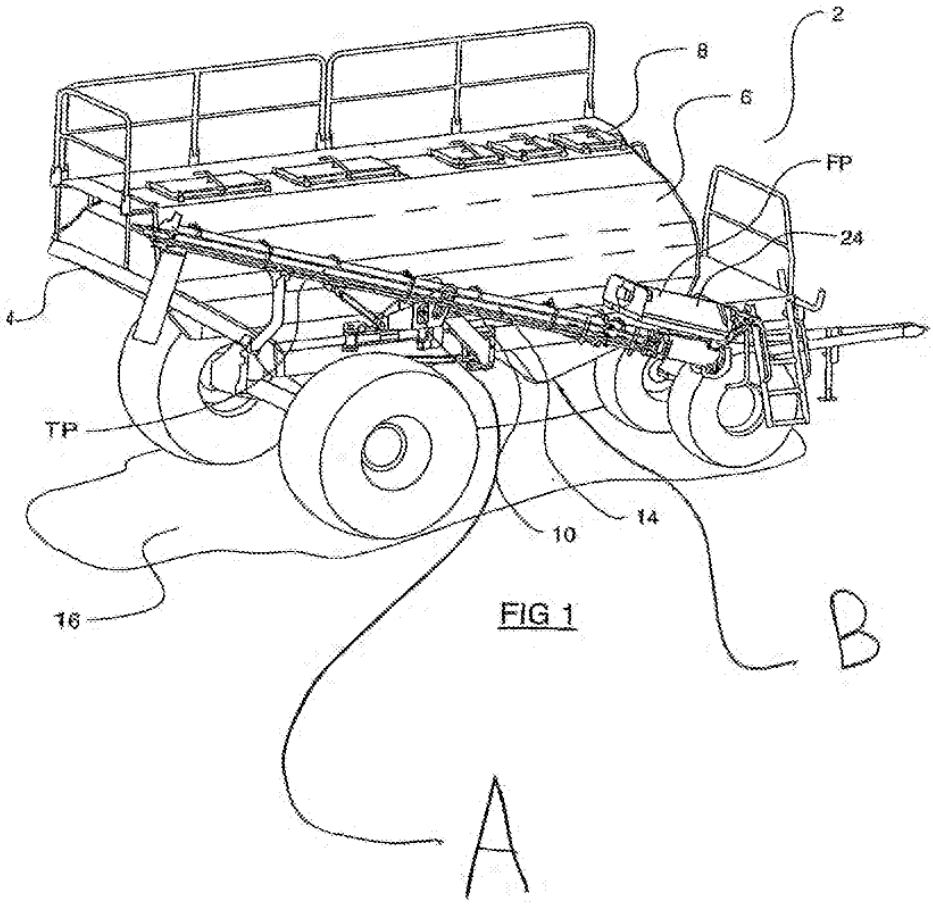

FIG 1

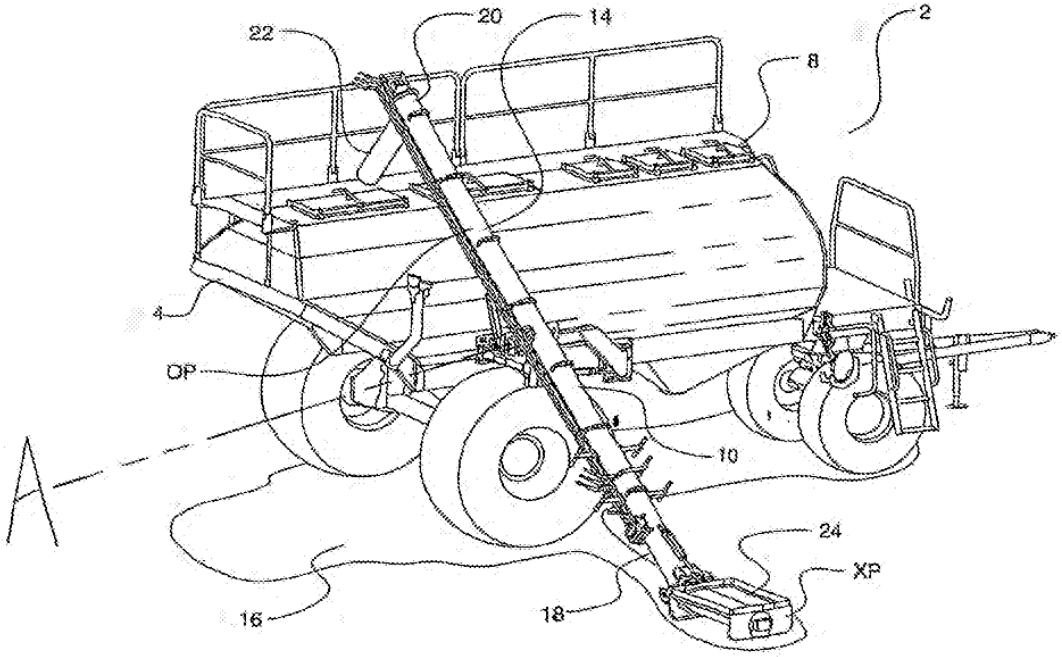

FIG. 2

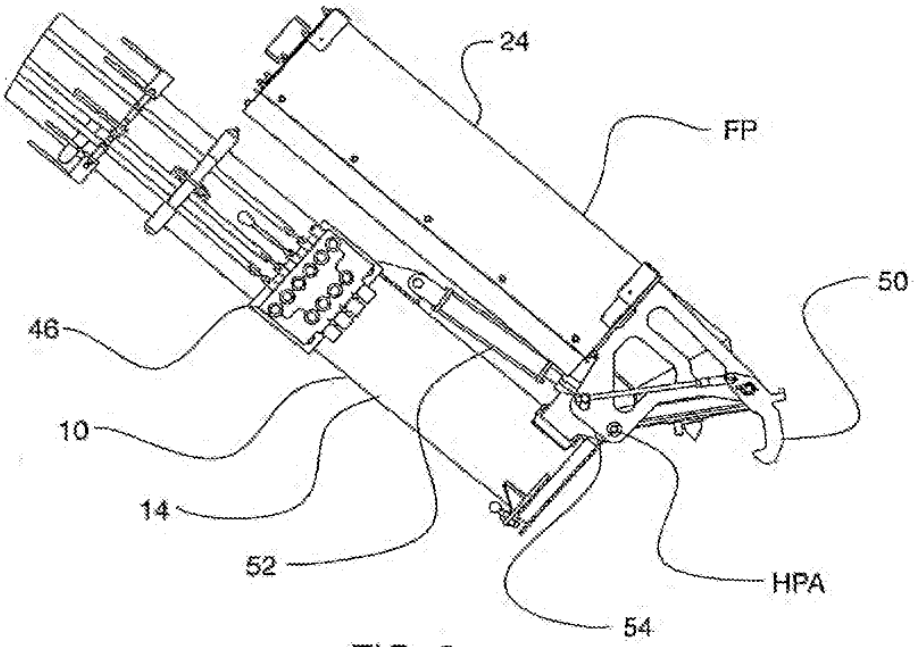

FIG. 3

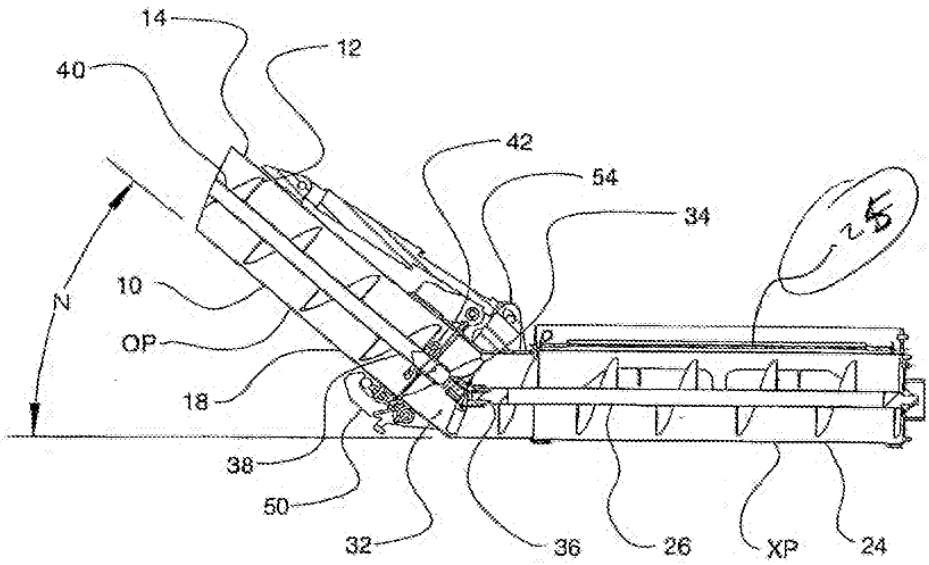

FIG 4

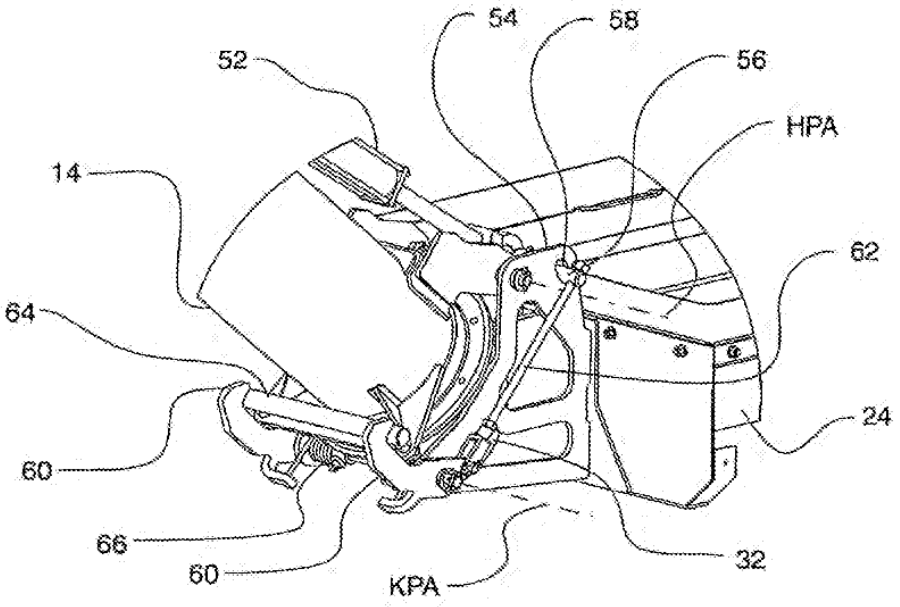

FIG. 5

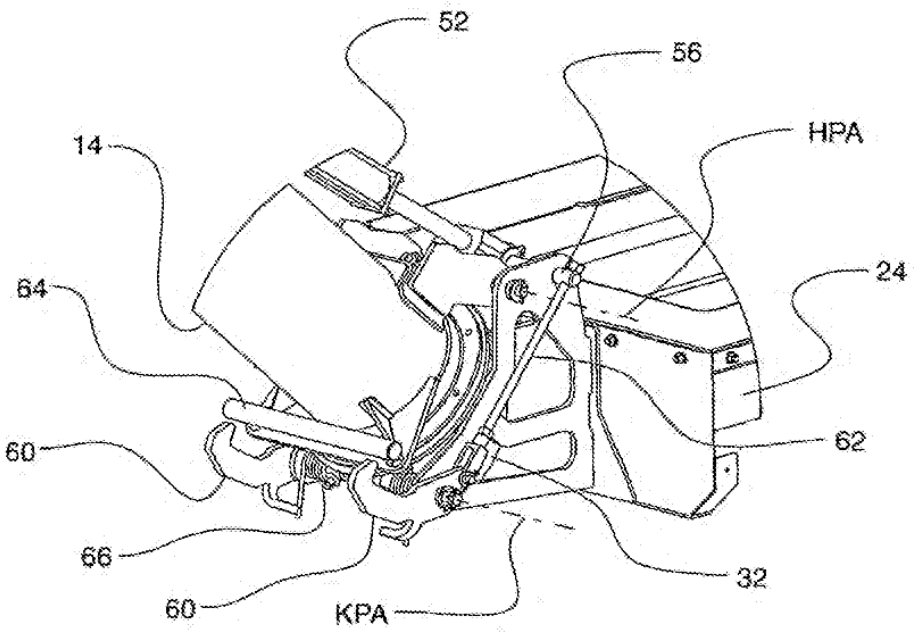

FIG. 6

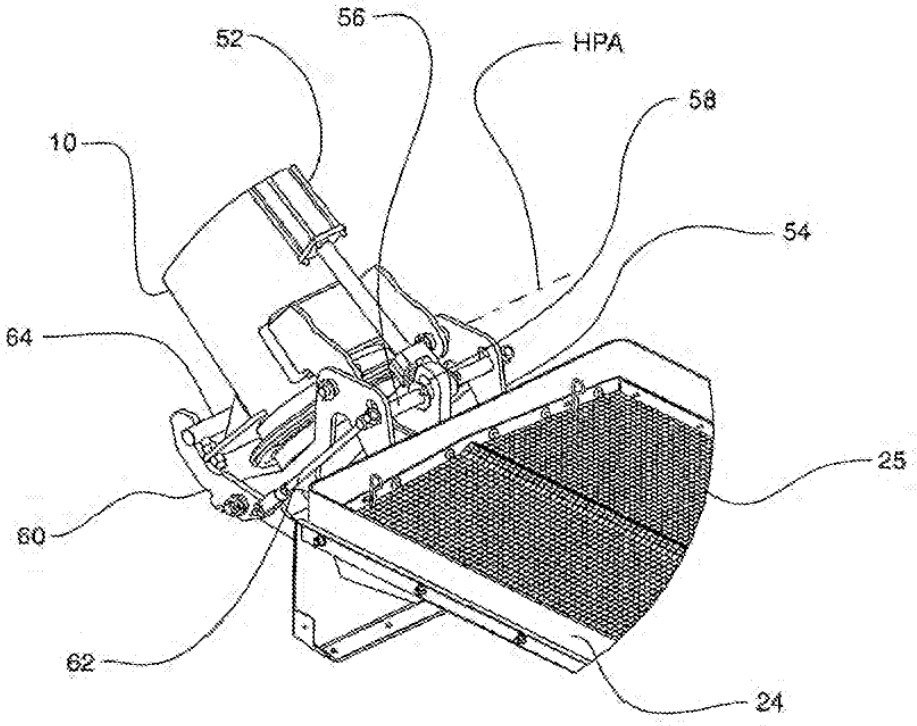

FIG 7

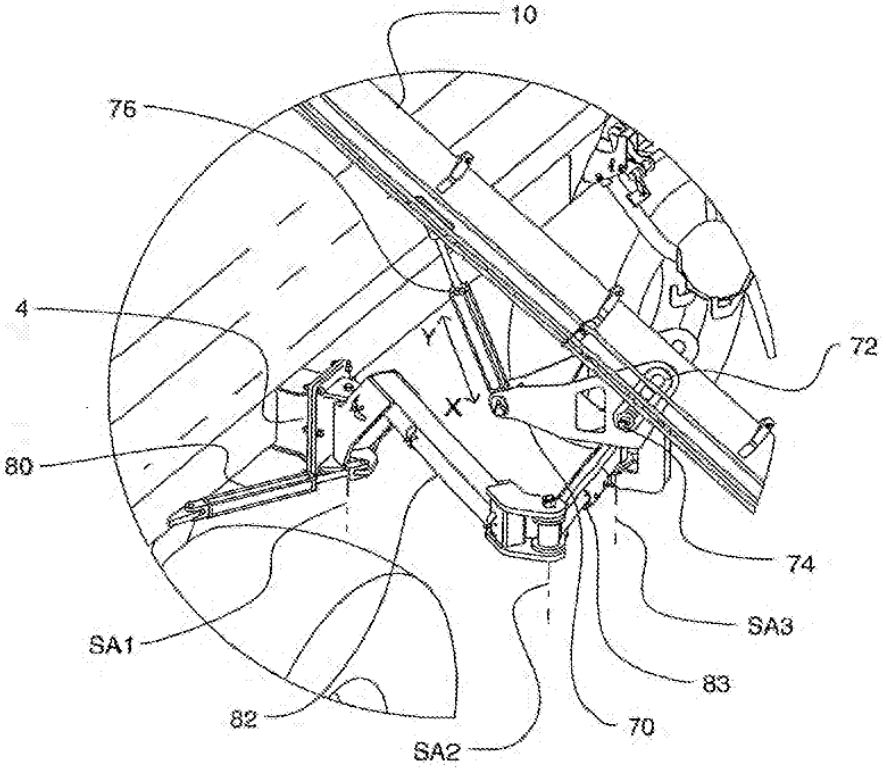

FIG. 8

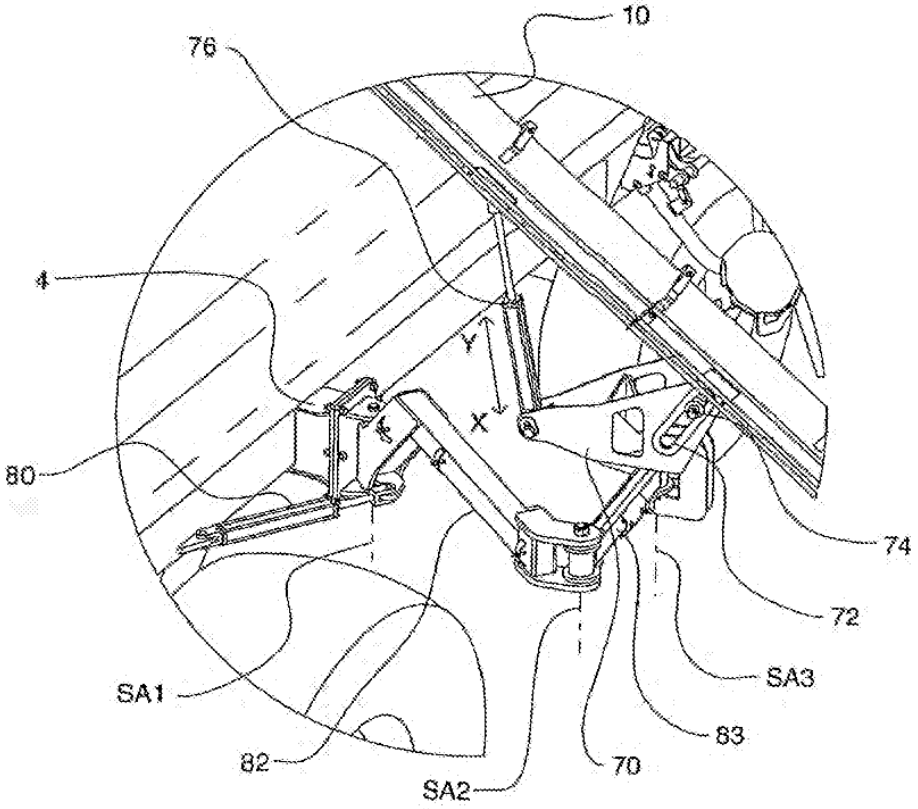

FIG. 9

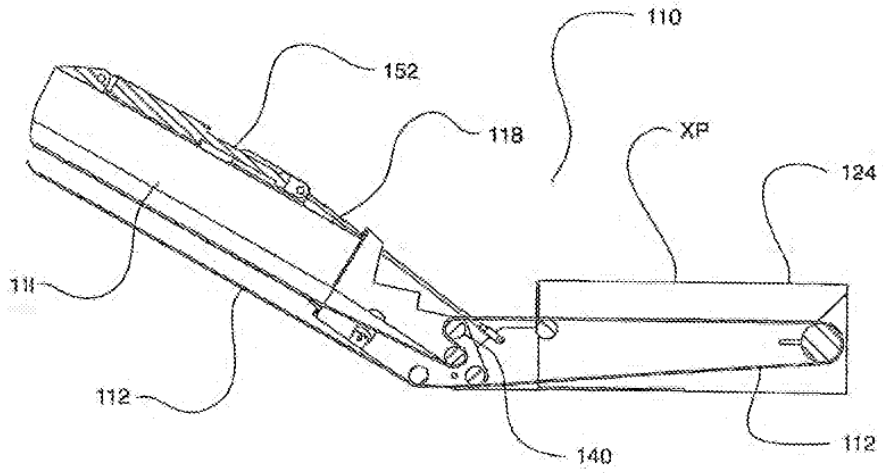

FIG 10

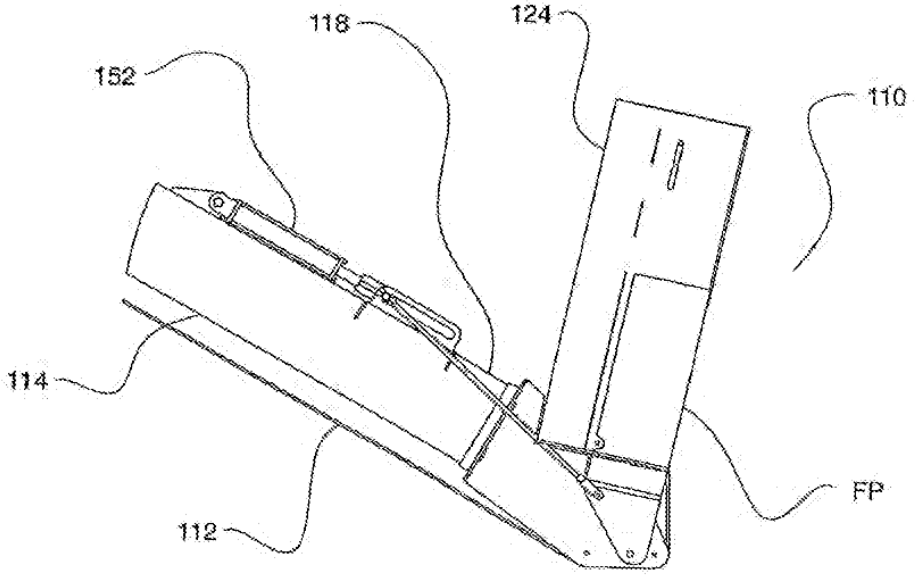

FIG 11

LOADING CONVEYOR WITH FOLDING HOPPER FOR AGRICULTURAL COMMODITY CARTS

This invention is in the field of air seeders such as are used in agriculture for seeding, fertilizing, and the like, and in particular with conveyors such as are mounted on agricultural commodity carts of such air seeders to transfer seed, fertilizer, and the like from a transport vehicle to tanks on the cart.

BACKGROUND OF THE INVENTION

Air seeders are known in the agricultural industry for planting and fertilizing crops. A typical air seeder comprises a frame for mounting a plurality of furrow openers and an agricultural commodity cart comprising at least one, and commonly two, three or more tanks for carrying various agricultural products like seed and fertilizer. Although not always present, commonly there is a conveyor mounted on the cart for transferring agricultural products from transport vehicles into the tanks. It is commonly seen as more convenient to mount a conveyor on the cart rather than on each transport vehicle, or maneuver a portable conveyor as a separate implement altogether.

The conveyor is typically mounted on a pivot mechanism configured to allow it to be moved from a transport position, where the bottom end of the conveyor is raised for transport, to an operating position where the bottom end is lowered to receive agricultural material from the transport vehicle, and is typically resting on the ground. The pivot mechanism also allows the conveyor to be maneuvered so that a spout on the upper discharge end of the conveyor can be maneuvered to direct agricultural product from the conveyor into the filling hatch for each tank.

Cart loading conveyors commonly include a hopper at the bottom intake end to receive agricultural product from the transport vehicle. Conventional cart conveyors typically comprise simply a straight tube with an auger inside to convey the product, and the hopper is simply mounted on the lower end. With hopper-bottom trailers such as are increasingly being used to carry agricultural products to air seeders, it is difficult to position a conventional hopper under the discharge chute located in the center of the trailer.

Canadian Patent Application Number 2,257,048 to Lisafeld discloses an agricultural commodity cart having an auger conveyor with an auger extension and hopper that extends horizontally under such a hopper-bottom trailer when the auger conveyor is in an operating position. Thus the hopper can be positioned under the discharge chute of the trailer to receive agricultural product. The length of the conveyor is increased by addition of the auger extension, such that the conveyor extends significantly beyond its original position. In some cases this can make it impractical to use the auger extension since it can interfere with other operations. The added weight of the auger extension further makes it more difficult to maneuver the conveyor manually into a desired position.

It is generally desirable to clean out the hopper on such conveyors when changing from one agricultural product to another in order to minimize contamination of the tanks with different agricultural products. On conventional cart conveyors, it is often possible to simply rotate the hopper on the conveyor tube such that the hopper is oriented downward. The auger can then be rotated in reverse so that material in the tube falls out of the lower end of the tube and into the inverted hopper and onto the ground.

Similarly in the apparatus of Lisafeld, while the hopper cannot be rotated on the auger tube, a cleanout port is provided in the bottom of the hopper so that the auger can be reversed and the majority of material will fall out the cleanout port. Some manual pushing of material is required to completely clean out the hopper.

As agricultural equipment grows larger, it is desired to provide larger conveyors for loading agricultural commodity carts. Such carts are now available that will carry 500 bushels or more of various agricultural products, and so the conventional seven and eight inch diameter auger conveyors take a significant amount of time to transfer a full load of product from the transport vehicle to the tanks. Ten inch auger conveyors would be much faster, however the large size makes it difficult to maneuver such conveyors.

It is desirable that the intake for a conveyor be screened to sieve the agricultural products and prevent entry into the agricultural commodity cart of lumps or foreign objects that could plug the tubes that carry agricultural products. This sieve screen has a mesh size that inhibits the flow of agricultural products through the sieve screen and into the auger intake. When increasing the capacity of the auger conveyor provision must also be made to provide a larger area of sieve screen that will allow the agricultural products to flow into the intake at the required increased rate. With conventionally configured hoppers this can be problematic since the conventional hopper is inclined on all sides. Thus to increase the sieve screen area, the conventional hopper must be made larger in every direction, which can interfere with fit under the discharge chute of a material transporting vehicle and ready storage in the transport position.

SUMMARY OF THE INVENTION

It is an object of the present invention to provide an agricultural commodity cart loading conveyor that overcomes problems in the prior art. It is a further object of the present invention to provide such a conveyor that comprises a conveyor extension within a hopper extending at an angle from the intake end of the conveyor to facilitate receiving agricultural materials from hopper bottom transport vehicles, and facilitate providing a larger sieve screen over the intake to satisfactorily feed a conveyor with increased capacity, and yet is more compact than prior art conveyors. It is a further object of the present invention to provide such a conveyor apparatus that includes a pivoting hopper that can be folded to reduce the length of the apparatus.

The present invention provides, in a first embodiment, an agricultural commodity cart loading conveyor apparatus comprising an agricultural commodity cart comprising at least one tank having a fill hatch located at a top portion of the cart. A conveyor comprising a conveyor tube is mounted to the cart such that the conveyor can be moved from a transport position wherein a lower end of the conveyor tube is raised off the ground, to an operating position wherein a lower end of the conveyor tube is substantially on the ground and the conveyor tube is inclined upward such that an upper discharge end of the conveyor tube is oriented to direct material discharged there-from into a fill hatch. A hopper is pivotally attached to the lower end of the conveyor tube and a hopper conveyor section is mounted along a bottom of the hopper. The hopper can pivot from an extended position to a folded position, and in the extended position the hopper is oriented at an angle to the conveyor tube such that the hopper extends along the ground when the conveyor is in the operating position, and in the extended position the hopper is connected to the lower end of the conveyor tube such that

the hopper conveyor section conveys material entering the hopper into the lower end of the conveyor tube for conveyance up the conveyor tube. A lock is operative to lock the hopper and conveyor tube together when the hopper is in the extended position.

The present invention provides, in a second embodiment, an agricultural commodity cart loading conveyor apparatus comprising an agricultural commodity cart comprising at least one tank having a fill hatch located at a top portion of the cart. A conveyor comprising an auger inside a conveyor tube is mounted to the cart such that the conveyor can be moved from a transport position wherein the conveyor tube is raised off the ground, to an operating position wherein a lower end of the conveyor tube is substantially on the ground and the conveyor tube is inclined upward such that an upper discharge end of the conveyor tube is oriented to direct material discharged there-from into a fill hatch. A hopper is pivotally attached to the lower end of the conveyor tube about a hopper pivot axis located above the conveyor and oriented substantially horizontally and perpendicular to the conveyor tube, and an auger extension is rotatably mounted along a bottom of the hopper. A tube transition section extends from a rear end of the hopper at an angle to the auger extension. The hopper can pivot from an extended position wherein the tube transition section is aligned with the conveyor tube and the hopper extends along the ground when the conveyor is in the operating position, to a folded position. An auger section inside the tube transition section is connected at one end to an inner end of the auger extension and adapted at an opposite end to releasably engage a lower end of the auger of the conveyor when the hopper is in the extended position such that rotation of the auger rotates the auger extension and such that the hopper can be pivoted to disengage the auger and auger extension and move the hopper into the folded position. A lock is operative to lock the hopper and conveyor tube together when the hopper is in the extended position.

Conveniently, the apparatus includes hydraulic cylinders to fold and unfold the hopper, and also to raise and lower the conveyor, and to swing the conveyor laterally, thereby facilitating the use of larger diameter conveyors with higher capacity than those common in the prior art. Such a hopper can also be of a sufficient length to provide a sieve screen over the intake that will allow for flow of agricultural products at an increased rate to feed a conveyor with an increased capacity.

BRIEF DESCRIPTION OF THE DRAWINGS

While the invention is claimed in the concluding portions hereof, preferred embodiments are provided in the accompanying detailed description which may be best understood in conjunction with the accompanying diagrams where like parts in each of the several diagrams are labeled with like numbers, and where:

FIG. 1 is a perspective view of an embodiment of the invention with the conveyor in the transport position, and the hopper in the folded position;

FIG. 2 is a perspective view of an embodiment of the invention with the conveyor in the operating position, and the hopper in the extended position;

FIG. 3 is a side view of the embodiment of FIG. 1 with the hopper in the folded position;

FIG. 4 is a side view of the embodiment of FIG. 1 with the hopper in the extended position;

FIG. 5 is a perspective view of the hooks and crossbar of the lock engaged to lock the conveyor tube and hopper together;

FIG. 6 is a perspective view of the hooks and crossbar of the lock disengaged to allow the hopper to be folded;

FIG. 7 is a perspective view of the hopper hydraulic cylinder attached to the hopper pin;

FIG. 8 is a perspective view of the attachment of the conveyor to the cart, with the intake end of the conveyor near the ground;

FIG. 9 is a perspective view of the attachment of the conveyor to the cart, with the lower end of the conveyor tube on the ground, and the discharge end of the conveyor in position to discharge into a fill hatch.

FIG. 10 is a schematic side view of a belt conveyor of the invention in the extended position;

FIG. 11 is a schematic side view of the belt conveyor of FIG. 10 in the folded position.

DETAILED DESCRIPTION OF THE ILLUSTRATED EMBODIMENTS

FIGS. 1-9 illustrate an agricultural commodity cart loading conveyor apparatus 2 of the invention. The apparatus 2 comprises an agricultural commodity cart 4 comprising a plurality of tanks 6. Each tank 6 has a fill hatch 8 located at a top portion of the cart 4. The cart 4 is typically attached to a seeding tool bar (not illustrated) that is operative to receive the agricultural commodities carried in the tanks 6 through a system of air ducts, and deposit the material in the soil. Such carts are typically pulled either directly behind or sometimes directly ahead of such a tool bar.

In the embodiment of FIGS. 1-9 the conveyor 10 comprises an auger 12 inside a conveyor tube 14 as illustrated in FIG. 4. As described below, FIGS. 10 and 11 schematically illustrate an alternate embodiment in use with a belt conveyor.

The conveyor 10 is mounted to the cart 4 such that the conveyor 10 can be moved from a transport position TP wherein the conveyor is raised off the ground 16 for transport as illustrated in FIG. 1, to an operating position OP as illustrated in FIG. 2 for transferring agricultural materials from a transport vehicle to one of the tanks 6. In the operating position OP the lower end 18 of the conveyor tube 14 is substantially on the ground 16 and an upper discharge end 20 is oriented to direct material discharged into one of the fill hatches 8, typically through a chute 22 or the like.

In order to facilitate transferring agricultural materials from hopper-bottom trailers and like transport vehicles, the invention provides a hopper 24 pivotally attached to the lower end 18 of the conveyor tube 14. A hopper conveyor section comprises an auger extension 26 rotatably mounted along the bottom of the hopper 24, as illustrated in FIG. 4.

In the extended position XP of FIGS. 2 and 4 the hopper 24 is oriented at an angle to the conveyor tube 14 such that the hopper 24 extends along the ground when the conveyor 10 is in the operating position OP, as illustrated in FIGS. 2 and 4. The angle N in the illustrated embodiment between the auger extension 26 and the conveyor tube 14 is about 40°, and can be modified to suit the particular configuration.

In the extended position XP the hopper 24 adds significantly to the length of the conveyor 10, such that it could interfere with access to ladders and the like on the cart 4, or contact the tool bar and cause damage. To avoid these problems, the hopper 24 can pivot from the extended position XP to a folded position FP wherein the hopper 24 is above the conveyor tube 14 as illustrated in FIGS. 1 and 3.

In the illustrated embodiment the hopper 24 is folded over on top of the conveyor tube 14 so as to be oriented above and substantially aligned with the conveyor tube 14, making for the most compact folded position that is least likely to interfere with operations of the air seeder. It is contemplated that the hopper 24 could be folded beside the conveyor tube 14 as well, or in some other manner that reduced the interference caused by the hopper 24 in the conditions encountered in a particular application.

In the illustrated embodiment, a tube transition section 32 extends from a rear end of the hopper 24 at an angle to the auger extension 26 such that the tube transition section 32 is aligned with the tube 14 of the conveyor 10 when the hopper 24 is in the extended position XP. An auger section 34 inside the tube transition section 32 is connected at one end to an inner end 36 of the auger extension 26 by a universal joint, flexible shaft, gear box, or the like. The opposite end of the auger section 34 is adapted to engage the lower end 38 of the auger 12 of the conveyor 10. In the illustrated embodiment the shaft 40 of the auger 12 is hollow, and the end of the auger section 34 extends somewhat into the shaft 40 to align the auger section 34 with the auger 12, and a pin 42 on the auger section 34 engages the end of the flighting or a like protrusion on the lower end 38 of the auger 12 so that rotation of the auger 12 causes rotation of the auger section 34 and the auger extension 26. Thus the hopper conveyor section conveys material entering the hopper 24 into the lower end 18 of the conveyor tube 14 for conveyance up the conveyor tube 14.

To prevent accidental separation of the hopper 24 and conveyor tube 14 during operation, a lock 50 is operative to lock the hopper 24 and conveyor tube 14 together when the hopper 24 is in the extended position XP.

The illustrated apparatus 2 is designed for use with a relatively large conveyor 10, such as one having, for example a tube 14 with a diameter of ten inches. The corresponding hopper 24 is about 42 inches long. The hopper 2 is covered by a sieve screen 25 as illustrated in FIG. 7 that has a mesh size small enough to prevent lumps and foreign objects that could plug tubes from entering the agricultural commodity cart. The sieve screen 25 also inhibits the flow of agricultural products through the sieve screen 25 and into the hopper 24. When increasing the size of the auger conveyor to ten inches the area of the sieve screen 25 must be made sufficiently large to allow the agricultural products to flow into the intake at the required increased rate to allow the conveyor to operate at full capacity. The length of the hopper 24 is of such a size to provide sufficient screen area, as well as to readily extend under hopper-bottom trailers and the like. The hopper 24 thus becomes too large and too heavy to conveniently pivot manually.

The illustrated embodiment of FIGS. 1-9 therefore provides an extendable hopper actuator comprising a hopper hydraulic cylinder 52 attached at one end to the conveyor tube 14 and attached at an opposite end to the hopper 24. A hopper control, typically a conventional hydraulic valve 46, is operative to selectively extend the hopper hydraulic cylinder 52 to move the hopper 24 to the extended position XP and retract the hopper hydraulic cylinder 52 to move the hopper 24 to the folded position FP.

The hopper 24 is pivotally attached to the lower end 18 of the conveyor tube 14 about a hopper pivot axis HPA located above the conveyor tube 14 and oriented substantially horizontal and perpendicular to the conveyor tube 14. The hopper hydraulic cylinder 52 is attached to the hopper 24 at a location above the hopper pivot axis HPA. A hopper bracket 54 is attached to the hopper 24 and the hopper hydraulic cylinder 52 is attached to the hopper 24 by attachment to a hopper pin 56 extending through a hopper slot 58 defined by the hopper bracket 54.

FIGS. 5-7 illustrate a lock 50. In the illustrated embodiment the lock 50 is configured to lock the hopper 24 and conveyor tube 14 together when the hopper hydraulic cylinder 52 is extended to a maximum position and to unlock the hopper 24 and conveyor tube 14 when the hopper hydraulic cylinder 52 is retracted from the maximum position.

The illustrated lock 50 comprises a pair of hooks 60 pivotally attached to the hopper 24 about a hook pivot axis KPA. As illustrated the pair of hooks 60 are conveniently pivotally attached to the hopper 24 by pivotal attachment to lower portions of the hopper brackets 54 next to the tube transition section 32. The pair of hooks 60 is linked to the hopper hydraulic cylinder 52 by a release rod 62 on each side of the conveyor tube 14 linking the hopper pin 56 and the hooks 60. Thus movement of the hopper hydraulic cylinder 52 moves the hopper pin 56 which moves the release rods 62 and thus the hooks 60.

The lock 50 further comprises a crossbar 64 fixed to the conveyor tube 14 and configured such that the hooks 60 engage the crossbar 64 to lock the hopper 24 and conveyor tube 14 together. A bias element, illustrated as springs 66, urges the hooks to pivot upward to engage the crossbar 64. When the hopper hydraulic cylinder 52 is extended to the maximum position as illustrated in FIG. 5 the hopper pin 56 moves to a first end of the hopper slot 58, and the release rod 62 moves down somewhat allowing the hook to move into engagement with the crossbar in response to a bias force exerted by the bias element. This mechanism better assures engagement of the hooks 60 on the crossbar 64, since it is not the force of the hopper hydraulic cylinder 52 that holds the hooks in engagement with the crossbar 64, but the bias force exerted by the springs 66. An accidental loss of hydraulic pressure, or creeping of the hopper hydraulic cylinder 52 will thus not cause the lock 50 to disengage.

When the hopper hydraulic cylinder 52 is retracted from the maximum position the hopper pin 56 moves along the hopper slot 58 from the first end toward the opposite second end, drawing the release rods 62 up as the hopper pin 56 moves along the hopper slot 58, and thereby moving the hooks 60 against the bias force exerted by the springs 66 and out of engagement with the crossbar 64. When the hopper pin 56 reaches the second end of the hopper slot 58, in the position illustrated in FIG. 6, the hooks 60 are disengaged from the crossbar 64, and the hopper pin 56 then bears against the second end of the hopper slot 58 to raise and fold the hopper 24.

FIGS. 8 and 9 illustrate an attachment of the conveyor 10 to the cart 4 that is particularly advantageous for maneuvering larger ten inch diameter auger conveyors. A mounting bracket 70 is attached to the cart 4 and defines a mounting slot 72. The conveyor 10 is mounted to the cart by a conveyor pin 74 through the mounting slot 72. A conveyor hydraulic cylinder 76 is pivotally attached to the cart 4 at one end and to the conveyor tube 14 at an opposite end. In the illustrated embodiment the conveyor hydraulic cylinder 76 is pivotally attached to the cart 4 by pivotal attachment to the mounting bracket 70, which in turn is attached to the cart 4 by pivotal attachment to the second swing bracket 83.

The conveyor hydraulic cylinder 76 and the mounting slot 72 are oriented such that moving the conveyor hydraulic cylinder 76 in a first direction X raises the lower end 18 of the conveyor tube 14 to the transport position TP with the conveyor pin 74 bearing against one end of the mounting

slot 72. Moving the conveyor hydraulic cylinder 76 in an opposite second direction Y first lowers the lower end 18 of the conveyor tube 14 to rest on the ground in the operating position, and then further movement of the conveyor hydraulic cylinder 76 in the second direction Y raises the discharge end of the conveyor tube 14 and causes the conveyor pin 74 to move along the mounting slot 72, as illustrated in FIG. 9. The mounting slot 72 allows the conveyor tube 14 to be raised and lowered without risk of exerting a bending force on the conveyor tube 14 that could be caused by the lower end 18 bearing against the ground and resisting movement of the conveyor hydraulic cylinder 76, possibly thereby bending the conveyor tube 14.

To facilitate handling of a large conveyor, the illustrated embodiment further comprises a swing hydraulic cylinder 80 attached between the cart 4 and the conveyor tube 14 and operative to move the conveyor tube 14 laterally about a substantially vertical swing axis.

In the illustrated embodiment, a first swing bracket 82 is pivotally attached to the cart 4 about a substantially vertical first swing axis SA1, and a second swing bracket 83 is pivotally attached to the first swing bracket 82 about a substantially vertical second swing axis SA2. The mounting bracket 70 is pivotally attached to the second swing bracket 83 about a substantially vertical third swing axis SA3. The conveyor tube 14 is attached to the mounting bracket 70 as described above. The swing hydraulic cylinder 80 is attached to the cart 4 at one end and to the first swing bracket 82 at the opposite end. Conventional hydraulic valves 46, as illustrated in FIG. 3, are conveniently located to control the conveyor hydraulic cylinder 76, the swing hydraulic cylinder 80, and the hopper hydraulic cylinder 82 so that the operator can maneuver the conveyor 10 between the transport position and operating positions that will allow the conveyor 10 to discharge agricultural materials into any of the fill hatches 8.

FIGS. 10 and 11 schematically illustrate an embodiment in use with a belt conveyor 110. The belt conveyor 110 comprises a belt 112 inside the conveyor tube 114 for conveying material from the lower end 118 through the conveyor tube 114. The belt 112 extends through the conveyor tube 114 and along the bottom of the hopper 124, passing around a configuration of rollers 140 configured such that the hopper 124 can pivot up from the extended position XP illustrated in FIG. 10 to the folded position FP illustrated in FIG. 11.

Thus the belt 112 extends through the hopper conveyor section and conveys material entering the hopper 124 into the lower end of the conveyor tube 114 for conveyance up the conveyor tube 114.

The embodiment of FIGS. 10 and 11 also shows the use of an electric screw type extendable hopper actuator 152 instead of a hydraulic cylinder to fold the hopper 124. Such an actuator 152 is not susceptible to creeping like a hydraulic cylinder, and so when extended could also serve as the lock to maintain the hopper 124 and conveyor tube 114 in position with the hopper 124 in the extended position. Other mechanisms could also be used that would serve to extend the hopper 24 and lock it in the extended position without risk of the hopper 24 creeping or moving out of position.

In embodiments for use with a smaller conveyor, it is contemplated that the hopper could be folded manually, and a conventional lock mechanism used to releasably lock the hopper and conveyor tube together for operation in the extended position of the hopper.

The foregoing is considered as illustrative only of the principles of the invention. Further, since numerous changes and modifications will readily occur to those skilled in the art, it is not desired to limit the invention to the exact construction and operation shown and described, and accordingly, all such suitable changes or modifications in structure or operation which may be resorted to are intended to fall within the scope of the claimed invention.

What is claimed is:

1. An agricultural commodity cart loading conveyor apparatus comprising:

an agricultural commodity cart comprising at least one tank having a fill hatch located at a top portion of the cart;

a conveyor comprising a conveyor tube movably mounted to the cart about a substantially vertical swing axis such that the conveyor can be moved from a transport position wherein a lower end of the conveyor tube is raised off the ground and the conveyor tube is substantially aligned with the cart and beside the cart, to an operating position wherein a lower end of the conveyor tube is substantially on the ground and the conveyor tube is inclined upward such that an upper discharge end of the conveyor tube is oriented to direct material discharged there-from into the fill hatch;

a hopper pivotally attached to the lower end of the conveyor tube about a hopper pivot axis located above the conveyor tube and oriented substantially horizontally and perpendicular to the conveyor tube;

a hopper conveyor section mounted along a bottom of the hopper;

wherein the hopper can pivot about the hopper pivot axis from an extended position to a folded position, and wherein in the extended position the hopper is oriented at an angle to the conveyor tube such that the hopper extends along the ground when the conveyor is in the operating position, and in the extended position the hopper is connected to the lower end of the conveyor tube such that the hopper conveyor section conveys material entering the hopper into the lower end of the conveyor tube for conveyance up the conveyor tube, and wherein in the folded position the hopper is above a lower portion of the conveyor tube;

an extendable hopper actuator attached at one end to the conveyor tube and attached at an opposite end to the hopper;

a hopper control operative to selectively extend the hopper actuator to move the hopper to the extended position and retract the hopper actuator to move the hopper to the folded position; and

a lock operative to lock the hopper and conveyor tube together when the hopper is in the extended position.

2. The apparatus of claim 1 wherein the hopper actuator comprises a hopper hydraulic cylinder and wherein the lock comprises a hook pivotally attached to the hopper about a hook pivot axis and linked to the hopper hydraulic cylinder, and a crossbar fixed to the conveyor tube and configured such that the hook engages the crossbar to lock the hopper and conveyor tube together when the hopper hydraulic cylinder is extended to a maximum position and such that the hook disengages the crossbar to unlock the hopper and conveyor when the hopper hydraulic cylinder is retracted from the maximum position.

3. The apparatus of claim 2 further comprising a bias element urging the hook to pivot in a direction to engage the crossbar, and wherein when the hopper hydraulic cylinder is extended to the maximum position the hook is allowed to move into engagement with the crossbar in response to a bias force exerted by the bias element, and wherein when the

hopper hydraulic cylinder is retracted from the maximum position the hook is moved against the bias force to disengage the crossbar.

4. The apparatus of claim 3 wherein the hopper hydraulic cylinder is attached to the hopper at a location above the hopper pivot axis.

5. The apparatus of claim 4 further comprising a hopper bracket attached to the hopper and wherein the hopper hydraulic cylinder is attached to the hopper by attachment to a hopper pin extending through a hopper slot defined by the hopper bracket, and further comprising a release rod linking the hopper pin and the hook.

6. The apparatus of claim 5 wherein the hopper pin is located substantially at a first end of the hopper slot when the hopper hydraulic cylinder is extended to the maximum position, and wherein the hopper pin moves along the hopper slot when the hopper hydraulic cylinder is retracted from the maximum position, thereby moving the hook out of engagement with the crossbar, and wherein the hopper pin bears against a second end of the hopper slot to fold the hopper.

7. An agricultural commodity cart loading conveyor apparatus comprising:

an agricultural commodity cart comprising at least one tank having a fill hatch located at a top portion of the cart;

a conveyor comprising a conveyor tube and mounted to the cart such that the conveyor can be moved from a transport position wherein a lower end of the conveyor tube is raised off the ground, to an operating position wherein a lower end of the conveyor tube is substantially on the ground and the conveyor tube is inclined upward such that an upper discharge end of the conveyor tube is oriented to direct material discharged there-from into a fill hatch;

a hopper pivotally attached to the lower end of the conveyor tube;

a hopper conveyor section mounted along a bottom of the hopper;

wherein the hopper can pivot from an extended position to a folded position, and wherein in the extended position the hopper is oriented at an angle to the conveyor tube such that the hopper extends along the ground when the conveyor is in the operating position, and in the extended position the hopper is connected to the lower end of the conveyor tube such that the hopper conveyor section conveys material entering the hopper into the lower end of the conveyor tube for conveyance up the conveyor tube;

a lock operative to lock the hopper and conveyor tube together when the hopper is in the extended position;

a mounting bracket attached to the cart and defining a mounting slot, and wherein the conveyor is mounted to the cart by a conveyor pin through the mounting slot; and

a conveyor hydraulic cylinder pivotally attached to the cart at one end and to the conveyor tube at an opposite end; and

wherein the conveyor hydraulic cylinder and the mounting slot are oriented such that moving the conveyor hydraulic cylinder in a first direction raises the lower end of the conveyor tube to the transport position, and such that moving the conveyor hydraulic cylinder in an opposite second direction lowers the lower end of the conveyor tube to rest on the ground in the operating position, and such that further movement of the conveyor hydraulic cylinder in the second direction raises the discharge end of the conveyor and causes the conveyor pin to move along the mounting slot.

8. The apparatus of claim 7 wherein the conveyor hydraulic cylinder is pivotally attached to the cart by pivotal attachment to the mounting bracket.

9. The apparatus of claim 7 further comprising a swing hydraulic cylinder attached between the cart and the conveyor and operative to move the conveyor laterally about a substantially vertical swing axis.

10. The apparatus of claim 9 further comprising a first swing bracket pivotally attached to the cart about a substantially vertical first swing axis, a second swing bracket pivotally attached to the first swing bracket about a substantially vertical second swing axis, and the mounting bracket is pivotally attached to the second swing bracket about a substantially vertical third swing axis, and the swing hydraulic cylinder is attached to the cart at one end and to the first swing bracket at the opposite end.

* * * * *

EXHIBIT 7

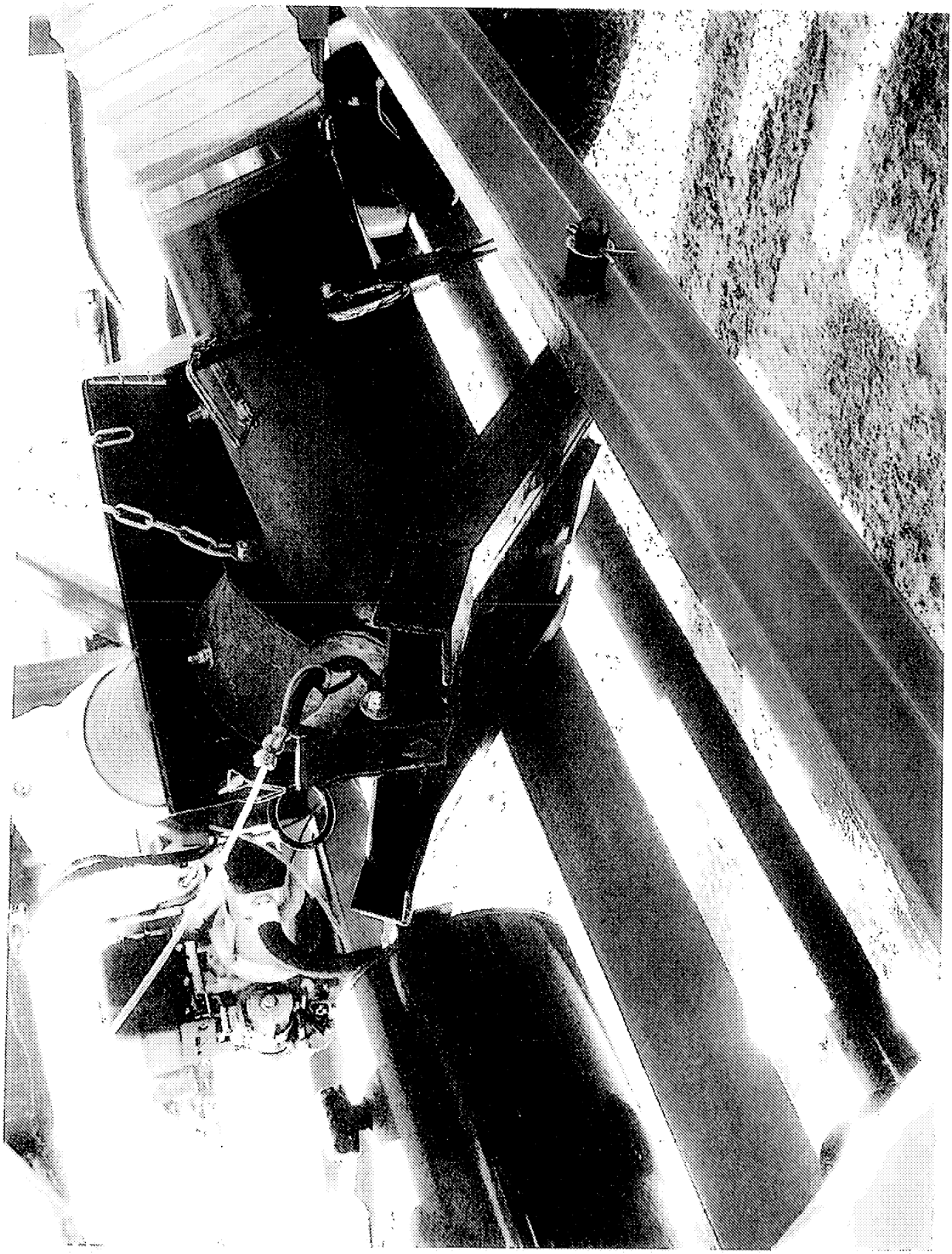

UM-PK0000937

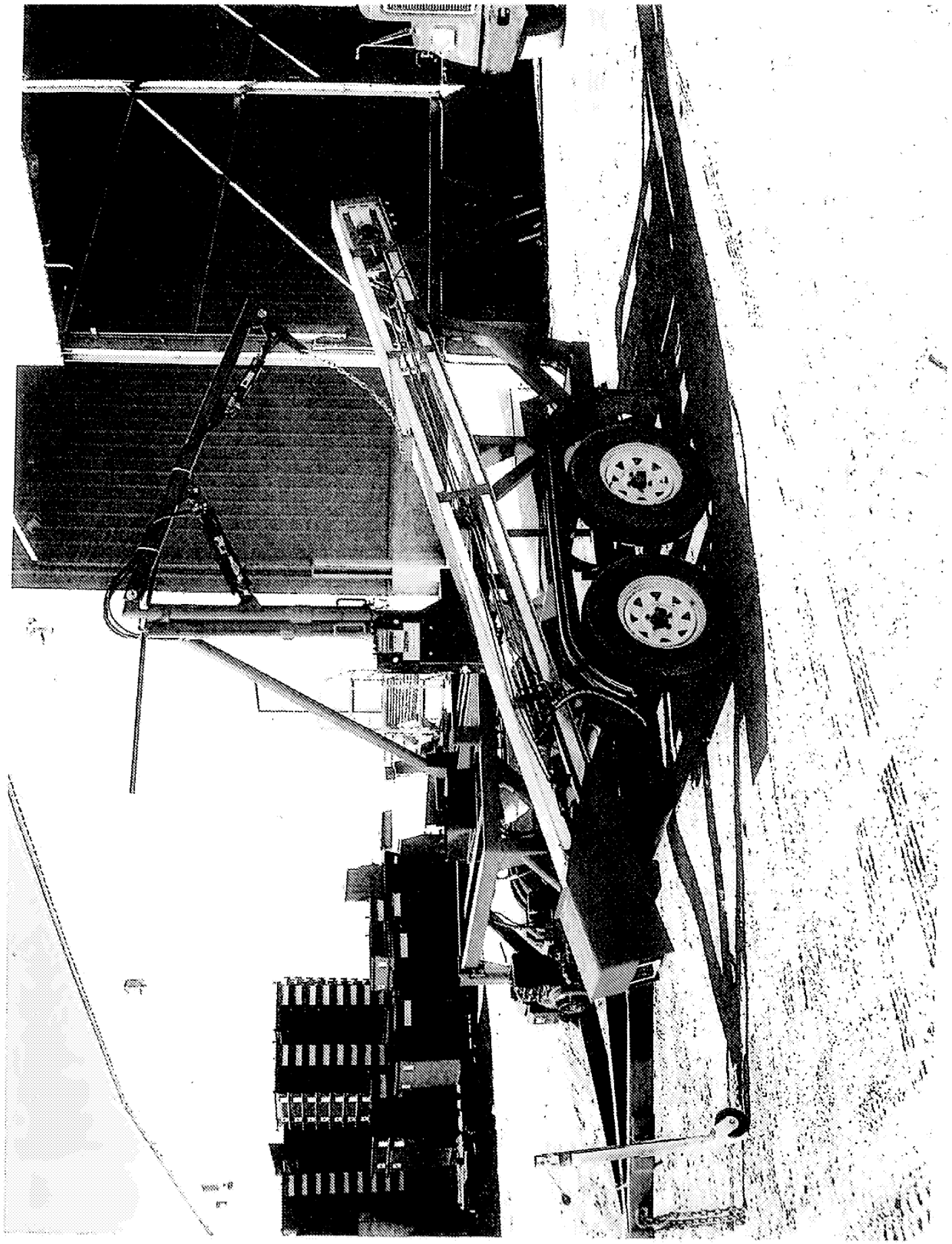

UM-PK0000938

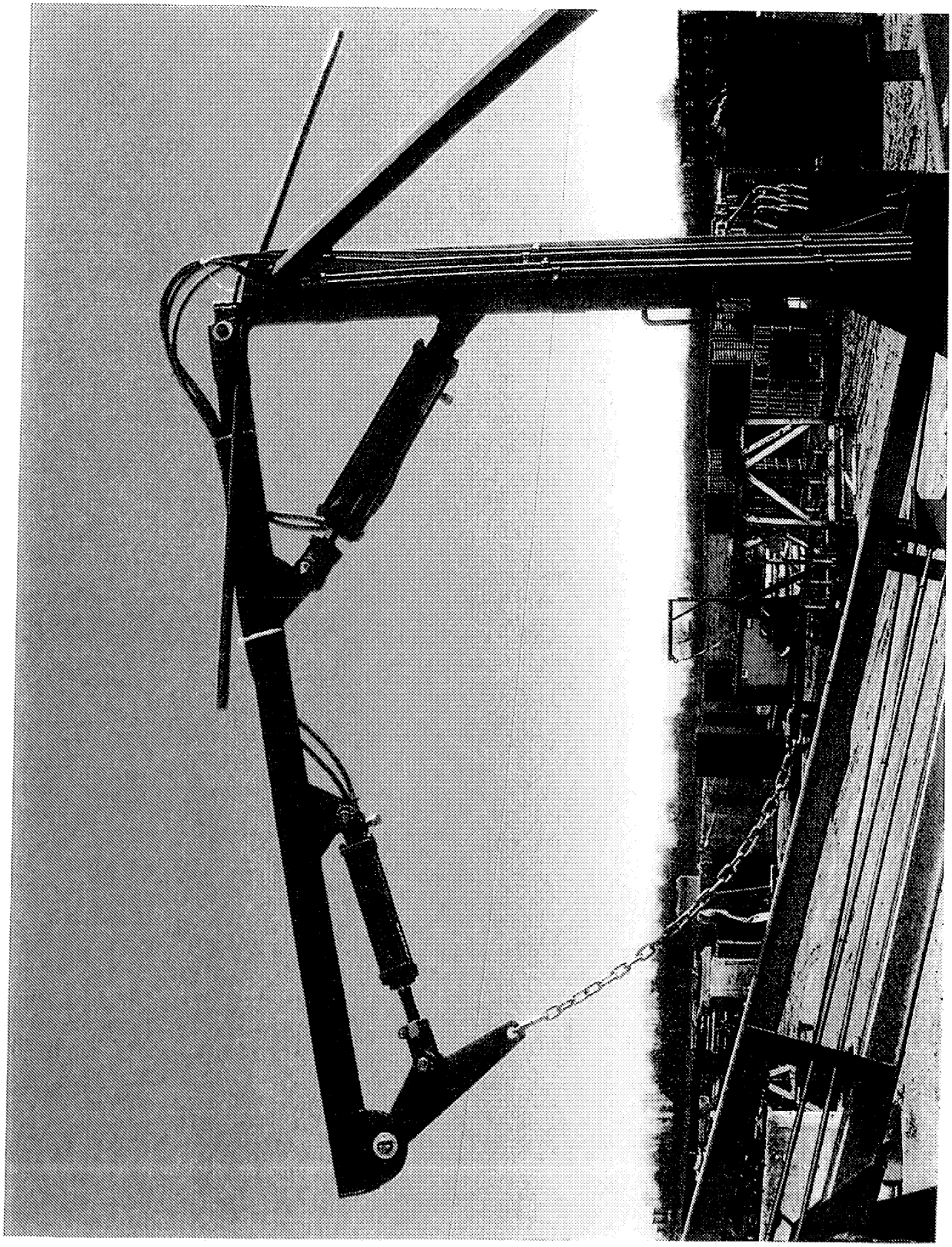

UM-PK0000939

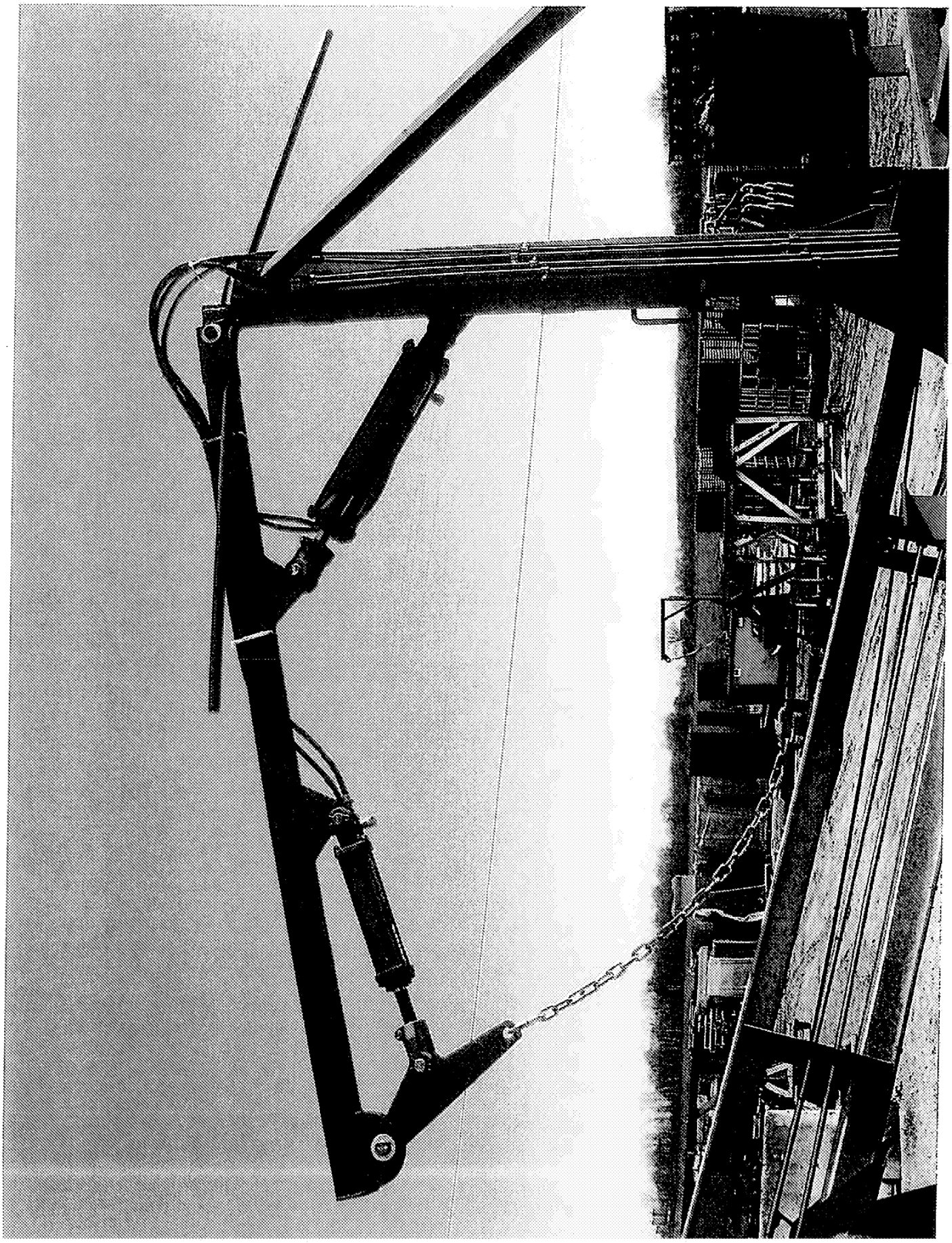

UM-PK0000940

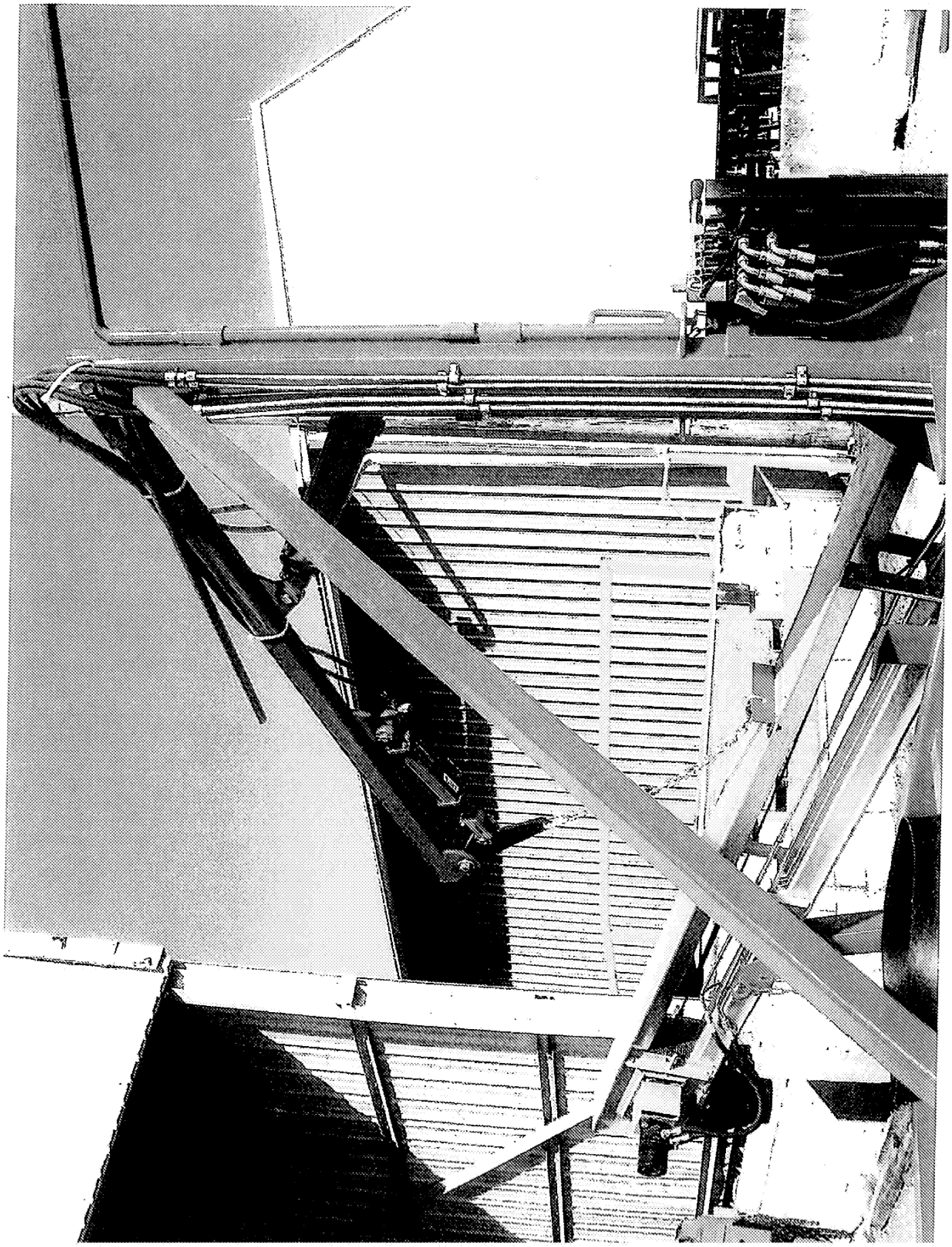

UM-PK0000941

295" FROM TONGUE TO END OF CONVEYOR (LONGEST POINT)
114" FROM GROUND TO TOP OF BOOM (HIGHEST POINT)
96" WIDE FROM FENDER TO FENDER (WIDEST POINT)
3420 LBS. COMPLETE W/O BOXES

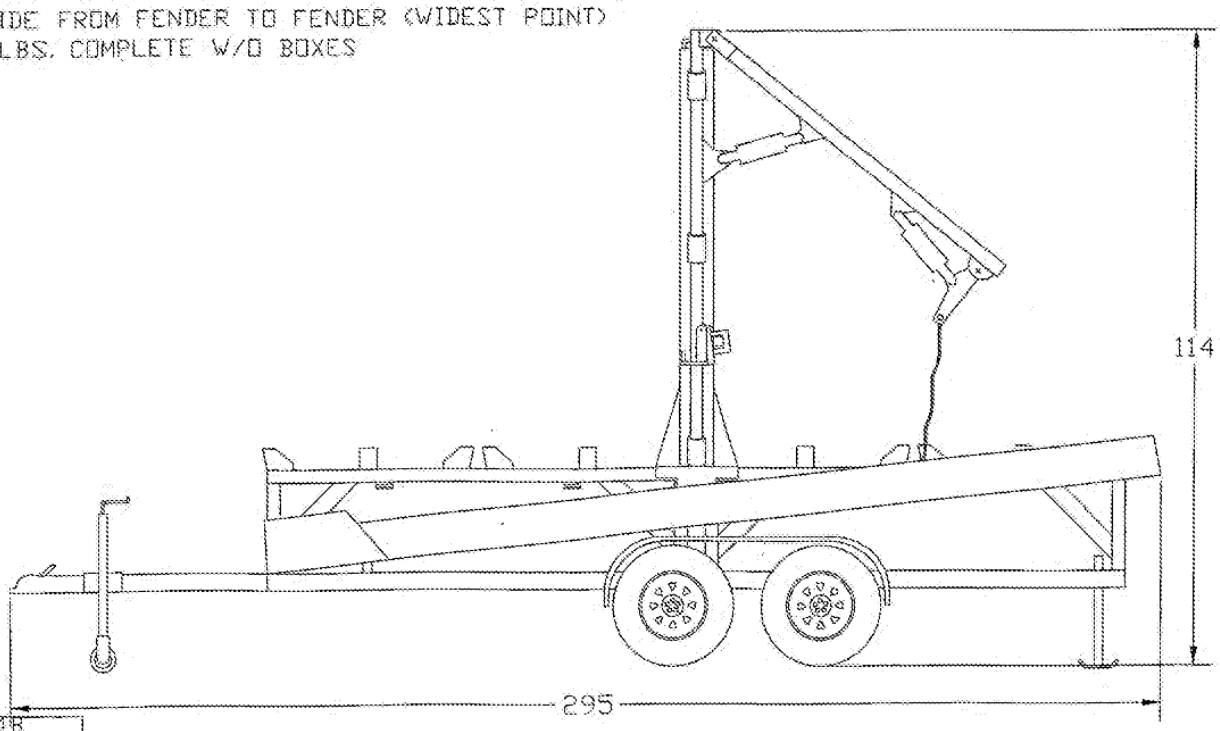

GWST4B			
USED ON			
APPLICATION			
MATERIAL:	UNLESS OTHERWISE SPECIFIED, DIMENSIONS WILL BE IN ENGLISH		
MATERIAL ID.:	1/16	1/32	ANGULAR
	±1/32	±1/64	±1°

Par-Kan Company
SILVER LAKE, IN 46982 USA

TITLE: DEMENSIONS

DWG BY: DSH	CHECKED:	APPROVED:
SCALE: 1=1	SIZE: A	SHEET 1 OF 1
DATE: 4-28-03	DRAWING NO.: GWST4B001DEN	

THESE DRAWINGS ARE THE PROPERTY OF PAR-KAN. THEY ARE ISSUED IN STRICT CONFIDENCE AND SHALL NOT BE REPRODUCED COPIED OR USED FOR MANUFACTURING PURPOSES WITHOUT WRITTEN PERMISSION

PK 04019

240" FROM TONGUE TO END OF CONVEYOR (LONGEST POINT)
113" FROM GROUND TO TOP OF BOOM (HIGHEST POINT)
95" WIDE FROM FENDER TO FENDER (WIDEST POINT)
2400 LBS. COMPLETE WEIGHT W/O BOXES

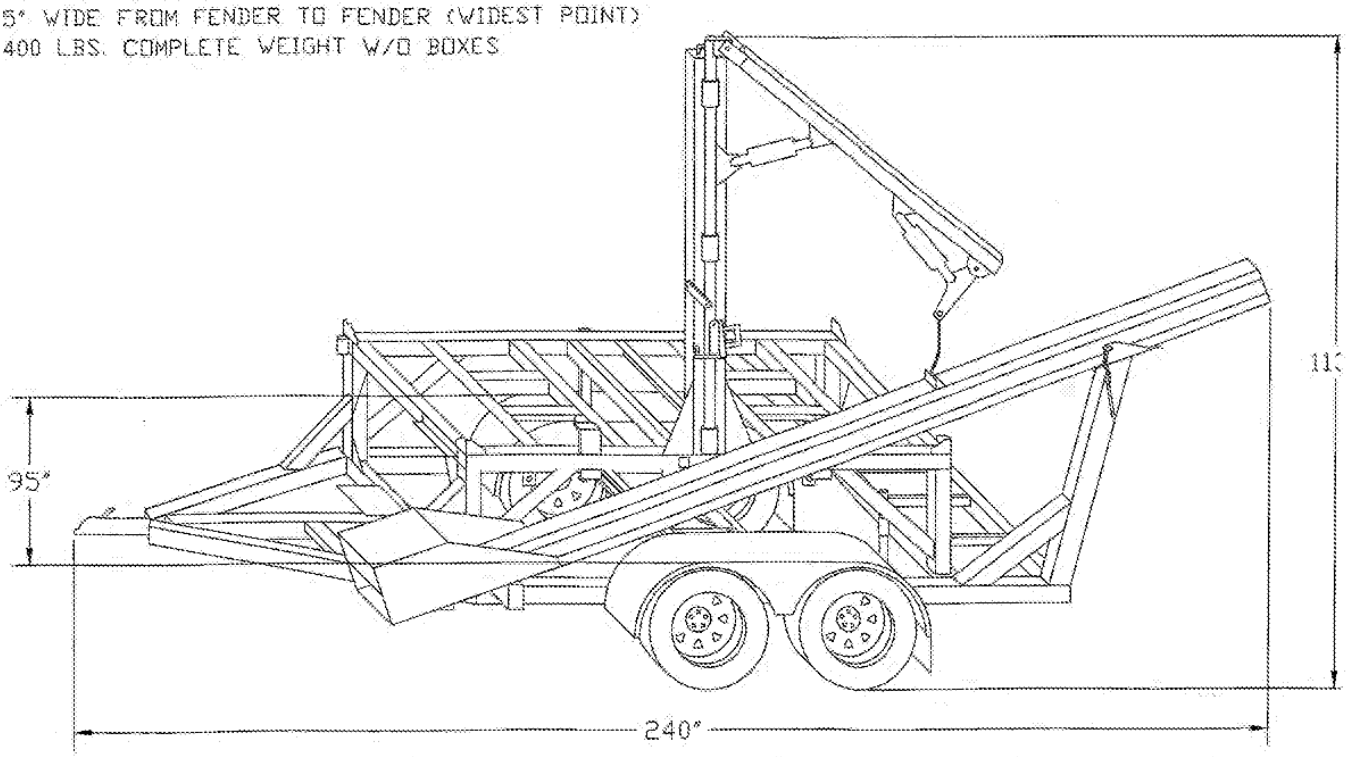

MATERIAL:	UNLESS OTHERWISE SPECIFIED, DIMENSIONS WILL BE IN ENGLISH			Par-Kan Company SILVER LAKE, IN 46982 USA
MATERIAL ID.:	1/16	1/32	ANGULAR	
	±1/32	±1/64	±1°	TITLE: OVERALL DEMENSIONS
THESE DRAWINGS ARE THE PROPERTY OF PAR-KAN. THEY ARE ISSUED IN STRICT CONFIDENCE AND SHALL NOT BE REPRODUCED COPIED OR USED FOR MANUFACTURING PURPOSES WITHOUT WRITTEN PERMISSION				DWG BY: DSH / CHECKED: / APPROVED:
				SCALE: 1=1 / SIZE: A / SHEET 1 OF 1
				DATE: 4-15-03 / DRAWING NO.: GWST2100DEM

PK004021

UM-PK0000943

GRAIN-WEIGH

Seed Delivery System

The Seed Delivery System by Grain Weigh allows delivery of 50 to 200 units directly to the field by utilizing a belt conveyor system that eliminates the concern of damaged seed.

A swing away conveyor allows not only delivery of seed to the planter unit but can also be used to fill pro boxes from the ground.

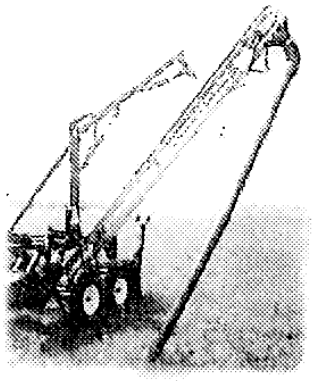

Belt Conveyor
12' discharge height
and up to 33' discharge width

Contact Ted Stansbury
at 800-291-5487
for more information, or order online

Par-Kan
COMPANY

Silver Lake, Indiana
800-291-5487 • fax (260)352-0701
www.par-kan.com • cwuthrich@par-kan.com

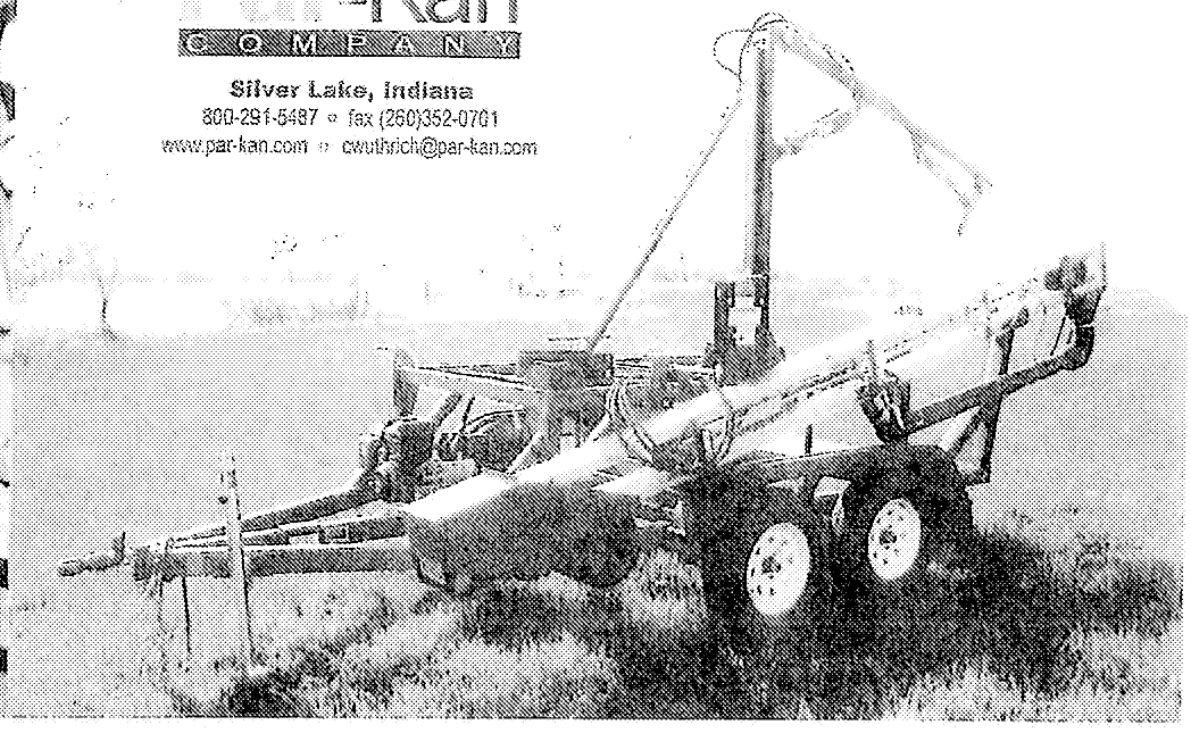

UM-PK0000944

EXHIBIT 8

US007500814B2

(12) **United States Patent**
Meyer

(10) **Patent No.: US 7,500,814 B2**
(45) **Date of Patent: Mar. 10, 2009**

(54) **CONVEYOR POSITIONING SYSTEM FOR AN AIR CART IN AN AGRICULTURAL SEEDER**

(75) Inventor: **Bradley J. Meyer**, Bismarck, ND (US)

(73) Assignee: **Deere & Company**, Moline, IL (US)

(*) Notice: Subject to any disclaimer, the term of this patent is extended or adjusted under 35 U.S.C. 154(b) by 424 days.

(21) Appl. No.: **11/247,520**

(22) Filed: **Oct. 11, 2005**

(65) **Prior Publication Data**

US 2007/0079739 A1 Apr. 12, 2007

(51) **Int. Cl.**

B65F 9/00	(2006.01)
B65G 1/00	(2006.01)
B65G 65/00	(2006.01)
B65G 67/00	(2006.01)
B60P 1/00	(2006.01)

(52) **U.S. Cl.** **414/327**; 414/343; 414/391; 414/398; 414/523; 414/526; 414/528; 414/920; 198/311; 198/317; 198/318; 198/861.4

(58) **Field of Classification Search** 414/523, 414/528, 327, 343, 390, 391, 393, 398, 526, 414/519, 520, 920; 198/311, 317, 813, 861.4, 198/312, 318

See application file for complete search history.

(56) **References Cited**

U.S. PATENT DOCUMENTS

4,742,938	A	5/1988	Niewold	222/381
5,108,249	A	4/1992	Kinzenbaw et al.	414/523
5,831,539	A	11/1998	Thomas et al.	340/674
5,831,542	A	11/1998	Thomas et al.	340/684
5,888,044	A	3/1999	Baskerville	414/523
5,979,343	A	11/1999	Gregor et al.	111/175
6,093,926	A	7/2000	Martins et al.	250/222.1

Primary Examiner—Christopher J. Novosad
(74) *Attorney, Agent, or Firm*—Taylor & Aust, P.C.

(57) **ABSTRACT**

An air cart for use in an agricultural seeder includes a frame; a material tank carried by the frame; an arm pivotally coupled with the frame; a conveyor coupled with the arm for conveying material to the tank; and a hydraulic positioning system coupled with the conveyor for automatically moving the conveyor to a selected one of a plurality of predetermined positions.

15 Claims, 3 Drawing Sheets

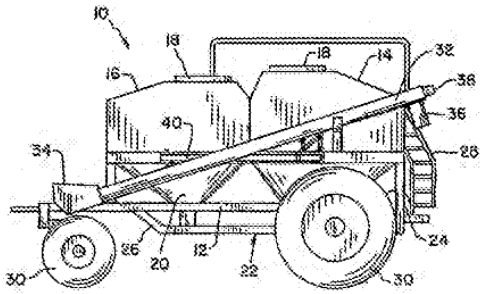

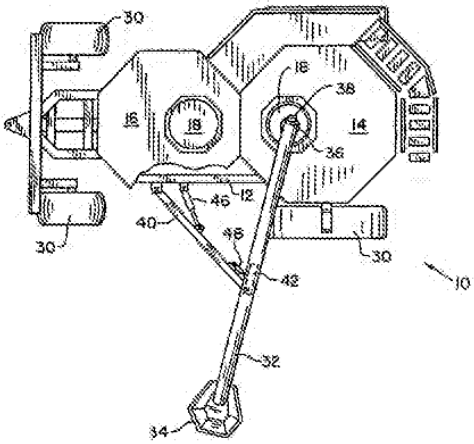

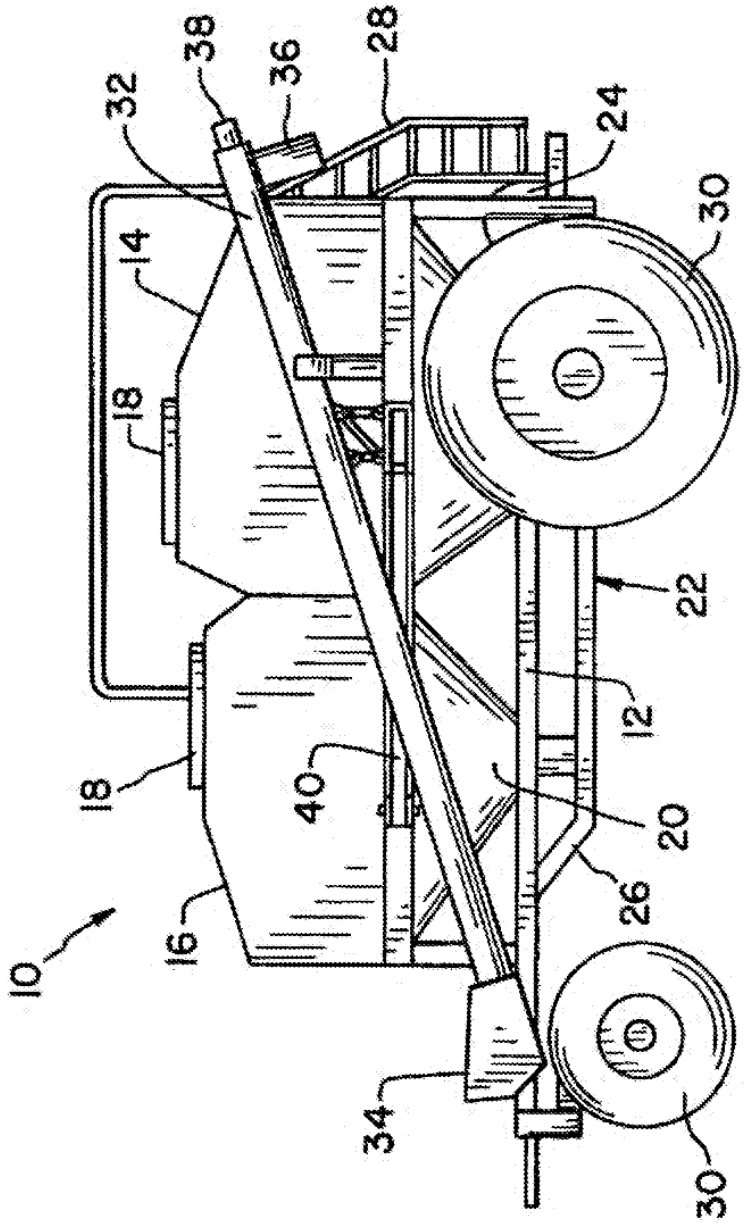

Fig. 1

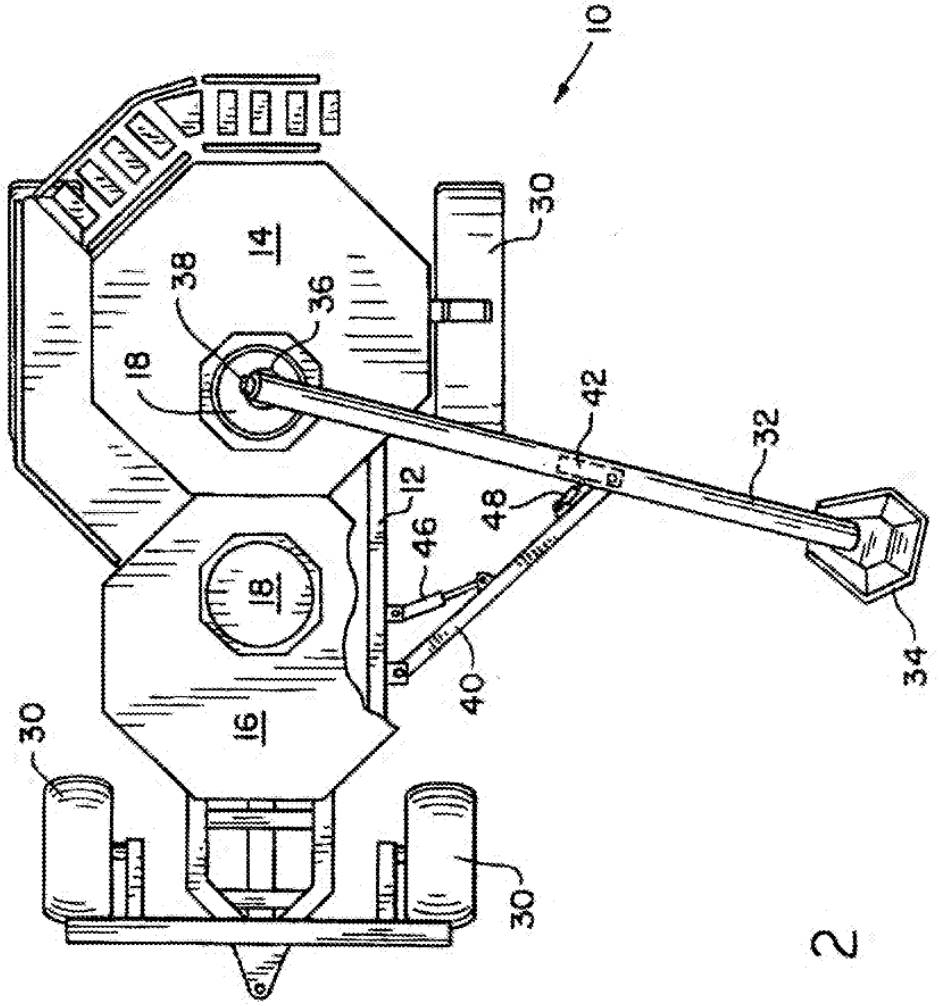

Fig. 2

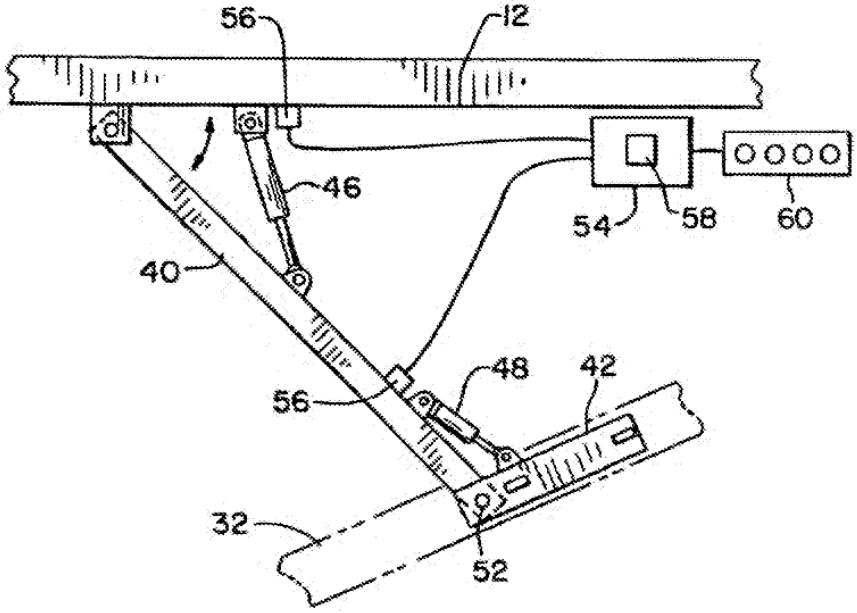

Fig. 3

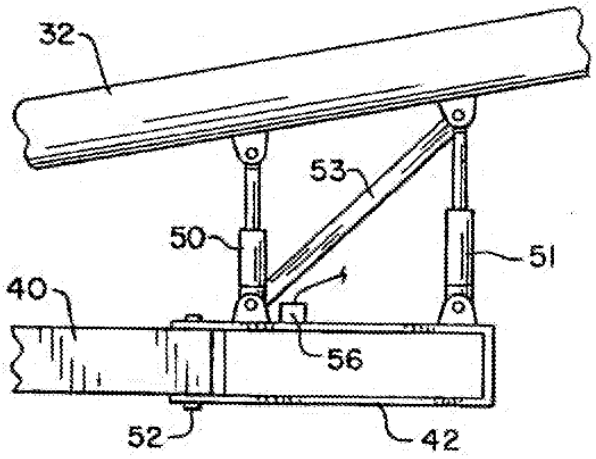

Fig. 4

CONVEYOR POSITIONING SYSTEM FOR AN AIR CART IN AN AGRICULTURAL SEEDER

FIELD OF THE INVENTION

The present invention relates to agricultural seeders, and, more particularly, to conveyor systems for air carts associated with such seeders.

BACKGROUND OF THE INVENTION

Air seeders are commonly towed by a traction unit, e.g., an agricultural tractor, to apply seed and/or fertilizer to a field. An air seeder has as a primary component a wheeled air cart which includes one or more frame-mounted tanks for holding material, typically seed and/or fertilizer. It is generally advantageous to tow an air cart in combination with a tilling implement, one behind the other, to place the seed and fertilizer under the surface of the soil. Air seeders generally include a metering system for dispensing material from the tanks and a pneumatic distribution system for delivering the material from the tanks to the soil. A centrifugal fan provides at least one airstream which flows through the pneumatic distribution system. Material is first introduced to the air stream by the metering system at a primary distribution manifold located below the metering system. Material is carried by the air stream through distribution lines to a series of secondary distribution manifolds, which in turn distribute the material through distribution lines to seed boots mounted behind ground openers on the tilling implement so that the product may be evenly delivered to the ground which is tilled by the tilling implement.

An air cart as described above typically includes a conveyor in the form of an auger or belt which is primarily used for loading the one or more tanks, but may also be used for unloading the one or more tanks. Such conveyors may be long and heavy, and thus are usually movably mounted to the frame of the air cart so that the operator is not required to lift and move the entire weight of the conveyor. Nonetheless, such conveyors still remain difficult for some operators to position for loading, unloading and transport, especially with wind or on sidehill terrain.

What is needed in the art is an air cart with a conveyor that can be simply, quickly and easily positioned at loading, unloading and transport positions.

SUMMARY OF THE INVENTION

The present invention provides an air cart having a hydraulic positioning system which automatically moves a conveyor to a selected predetermined position stored in a memory for loading, unloading or transport.

The invention comprises, in one form thereof, an air cart for use in an agricultural seeder, including a frame; a material tank carried by the frame; an arm pivotally coupled with the frame; a conveyor coupled with the arm for conveying material to the tank; and a hydraulic positioning system coupled with the conveyor for automatically moving the conveyor to a selected one of a plurality of predetermined positions.

The invention comprises, in another form thereof, a method of operating an agricultural seeder, including the steps of: providing an air cart including a frame, at least one material tank carried by the frame, a conveyor coupled with the frame for conveying the material, and a hydraulic positioning system coupled with the conveyor; selecting one of a plurality of predetermined positions of the conveyor; and actuating the hydraulic positioning system to automatically move the conveyor to the selected position.

BRIEF DESCRIPTION OF THE DRAWINGS

FIG. 1 is a side view of an embodiment of an air cart of the present invention with the conveyor in a transport position;

FIG. 2 is a top view of the air cart of FIG. 1 with the conveyor in a loading position;

FIG. 3 is a top, fragmentary view of a portion of the air cart shown in FIGS. 1 and 2; and

FIG. 4 is a side, fragmentary view of a portion of the air cart shown in FIGS. 1-3.

DETAILED DESCRIPTION OF THE INVENTION

Referring now to the drawings, and more particularly to FIGS. 1 and 2, there is shown an embodiment of an agricultural material handling implement in the form of an air cart 10 for use in an air seeder. Air cart 10 typically is pulled behind a tillage implement (not shown) including a number of openers for forming parallel seed trenches in the soil in which the singulated seeds are deposited in known manner. Air cart 10 may also be configured as a forecart which is pulled in front of the tillage implement by a traction unit such as a tractor (not shown).

Although configured as an air cart in the embodiment shown, the agricultural implement may also be in the form of a different type of implement which carries a material which can by conveyed, such as a gravity wagon, planter, etc.

Air cart 10 generally includes one or more tanks which hold a material to be deposited in the seed trenches formed in the soil, such as seed and/or fertilizer. In the embodiment shown, air cart 10 includes a first tank 14 and second tank 16. First tank 14 and second tank 16 each include an inlet 18 for receiving material, and an outlet 20 for discharging material to pneumatic distribution system 22 also carried by frame 12. Pneumatic distribution system 22 includes a centrifugal fan 24 which blows air at a predetermined flow rate and pressure through air distribution lines 26 to the tillage implement ahead of air cart 10.

Frame 12 also carries a stair and walkway 28, wheels 30 and conveyor 32. In the embodiment shown, conveyor 32 is in the form of an auger, but may also be in the form of a belt if desired. Conveyor 32 is primarily used to load material into tanks 14 and 16, but may also be used to unload material remaining within tanks 14 and 16 after planting is complete. Conveyor 32 includes an inlet 34 in the form of a loading hopper, an outlet 36 in the form of an unloading chute, and a hydraulic motor 38 adjacent outlet 36 for driving an internal flighting (not shown).

Conveyor 32 is generally moveable in three primary directions, i.e., toward and away from frame 12, up and down, and in a rotational direction about a generally vertical axis. To that end, a first arm 40 is pivotally coupled with frame 12. The outboard end of first arm 40 is moveable toward and away from frame 12 through the pivotal action, and is itself pivotally coupled with a second arm 42.

A hydraulic positioning system including a first hydraulic cylinder 46, second hydraulic cylinder 48, third hydraulic cylinder 50 and fourth hydraulic cylinder 51 effects movement of conveyor 32 in the three primary movement directions noted above. First hydraulic cylinder 46 is coupled between first arm 40 and frame 12 to effect the pivotal movement therebetween in a generally horizontal plane. Second hydraulic cylinder 48 is coupled between first arm 40 and second arm 42 to effect rotational movement of conveyor 32

about generally vertical pivot pin 52 interconnecting first arm 40 and second arm 42. Third hydraulic cylinder 50 and fourth hydraulic cylinder 51 are coupled between second arm 42 and the bottom of conveyor 32 to effect up and down movement of conveyor 32. Third hydraulic cylinder 50 and fourth hydraulic cylinder 51 may be operated sequentially or concurrently to effect up and down motion and up and down pivoting of conveyor 32. A cross bar linkage 53 extending between the bottom link of hydraulic cylinder 50 and the top link of hydraulic cylinder 51 prevents undesirable side to side motion of conveyor 32 (in the plane of the drawing shown in FIG. 4), while still allowing generally vertical and pivoting motion of conveyor 32.

According to an aspect of the present invention, conveyor 32 is moved in the primary movement directions using hydraulic cylinders rather than manually moved as is the case with known designs. Additionally, the hydraulic positioning system senses a current position of conveyor 32 and automatically moves conveyor 32 to a selected one of a plurality of positions including one or more loading positions, one or more unloading positions, and a transport position. More particularly, an electrical processing circuit 54 is carried by air cart 10 and may be digital or analog based. The exact mounting position of electrical processing circuit 54 on air cart 10 can be selected depending upon the application. Electrical processing circuit 54 is electrically coupled with one or more sensors 56 for sensing the current position of conveyor 32. In the embodiment shown, sensors 56 may be potentiometers that are coupled with a frame member adjacent a hydraulic cylinder and sense rotational movement of the cylinder relative to the frame member during use. It may also be desirable to place a sensor under conveyor inlet 34 to sense contact with the ground. Electrical processing circuit 54 is also electrically coupled with an indicator 58, preferably in the form of a visual display, for indicating to an operator the position of conveyor 32. Visual display 58 may be incorporated, e.g., in a GPS based monitoring and display system in the operators cab of the tractor. Alternatively, visual display 58 may be integrally incorporated into electrical processing circuit 54 on board air cart 10. Of course, other possibilities are also available, such as a dedicated visual display in the operators cab.

Electrical processing circuit 54 is also electrically coupled with an input device 60 which may include a number of depressible buttons corresponding to the number of predetermined positions of conveyor 32. In the embodiment shown, input device 60 is mounted directly to air cart 10 for access by an operator on the ground. Input device 60 may separately or concurrently be provided within the operators cab through the use of a dedicated device or incorporation into another device (such as a touch screen on a GPS system).

During operation, the various air and electrical connections of air cart 10 are coupled with the tillage implement and tractor as appropriate. Since air cart 10 includes a first tank 14 and second tank 16, conveyor 32 is moveable to a first loading position in which conveyor outlet 36 is positioned above inlet 18 of first tank 14 (FIG. 2), and a second loading position in which conveyor outlet 36 is positioned above inlet 18 of second tank 16. Conveyor 32 may also be positioned at an unloading position in which conveyor inlet 34 is positioned below a clean out plate (such as at the bottom of the air distribution manifold below second tank 16) for unloading unused material. Conveyor 32 is also moveable to the transport position shown in FIG. 1 after a loading or unloading operation. Conveyor 32 is moved to a selected position by depressing a corresponding button on an input device 60 located on board air cart 10 or in the operators cab. The position of conveyor 32 is sensed and electrical processing circuit 54 controls first hydraulic cylinder 46, second hydraulic cylinder 48 and/or third hydraulic cylinder 50 in a concurrent or sequential manner to move conveyor 32 to the selected position. The control logic necessary for controlling movement of conveyor 32 may be effected using suitable electrical hardware, software and/or firmware. Depending upon the contour of the ground or other factors, it may be desirable or necessary to place conveyor 32 in a "float" position after being moved to the selected position such that the bottom end of conveyor 32 slowly moves to and rests upon the ground. After a selected loading or unloading operation, the button corresponding to the transport position may be depressed and conveyor 32 is automatically moved back to the transport position shown in FIG. 1.

Having described the preferred embodiment, it will become apparent that various modifications can be made without departing from the scope of the invention as defined in the accompanying claims.

Assignment

The entire right, title and interest in and to this application and all subject matter disclosed and/or claimed therein, including any and all divisions, continuations, reissues, etc., thereof are, effective as of the date of execution of this application, assigned, transferred, sold and set over by the applicant(s) named herein to Deere & Company, a Delaware corporation having offices at Moline, Ill. 61265, U.S.A., together with all rights to file, and to claim priorities in connection with, corresponding patent applications in any and all foreign countries in the name of Deere & Company or otherwise.

The invention claimed is:

1. An agricultural implement, comprising:

a frame;

at least one material tank carried by said frame;

a conveyor coupled with said frame for conveying the material;

a hydraulic positioning system coupled with said conveyor for moving said conveyor in at least two directions to a selected one of a plurality of predetermined positions; and

at least one sensor for sensing a position of said conveyor.

2. The agricultural implement of claim 1, wherein said at least two directions include at least two of:

a generally horizontal direction;

a generally vertical direction; and

a rotational direction.

3. The agricultural implement of claim 1, further including at least one arm interconnecting said conveyor with said frame.

4. The agricultural implement of claim 3, wherein said at least one arm includes a first arm coupled with a second arm, and said positioning system includes a first hydraulic cylinder coupled between said first arm and said frame, and a second hydraulic cylinder coupled between said first arm and said second arm.

5. The agricultural implement of claim 4, wherein said first arm and said second arm are coupled together using a generally vertical pivot pin.

6. The agricultural implement of claim 1, wherein each said tank has an inlet and said conveyor has an outlet, said positioning system configured for positioning said conveyor outlet relative to a selected tank inlet.

7. The agricultural implement of claim 1, including an outlet associated with at least one said tank, said conveyor

having an inlet, said positioning system configured for positioning said conveyor inlet relative to said tank outlet.

8. The agricultural implement of claim 1, including an indicator for indicating a position of said conveyor.

9. The agricultural implement of claim 8, wherein said indicator comprises a visual display.

10. The agricultural implement of claim 1, wherein said conveyor comprises one of an auger and a belt.

11. The agricultural implement of claim 1, wherein said agricultural material handling implement comprises an air cart.

12. The agricultural implement of claim 1, wherein each said material tank carries at least one of seed and fertilizer.

13. The An agricultural implement, comprising:

a frame;

at least one material tank carried by said frame;

a conveyor coupled with said frame for conveying the material; and

a hydraulic positioning system coupled with said conveyor for moving said conveyor in at least two directions to a selected one of a plurality of predetermined positions;

at least one arm interconnecting said conveyor with said frame, said at least one arm includes a first arm coupled with a second arm, and said positioning system includes a first hydraulic cylinder coupled between said first arm and said frame, and a second hydraulic cylinder coupled between said first arm and said second arm; and

a third hydraulic cylinder coupled between said second arm and said conveyor.

14. An agricultural implement, comprising:

a frame;

at least one material tank carried by said frame;

a conveyor coupled with said frame for conveying the material; and

a hydraulic positioning system coupled with said conveyor for moving said conveyor in at least two directions to a selected one of a plurality of predetermined positions, said positioning system including at least two hydraulic cylinders coupled with said conveyor, and including an electrical processing circuit coupled with each said hydraulic cylinder, said electrical processing circuit actuating at least one said hydraulic cylinder to position said conveyor at one of said plurality of predetermined positions.

15. The agricultural implement of claim 14, wherein said at least one tank includes a first tank and a second tank, each of said first tank and said second tank including an inlet and an outlet, said conveyor including an inlet and an outlet, said one of a plurality of predetermined positions including one of:

a first position in which said conveyor outlet is positioned in association with said first tank inlet;

a second position in which said conveyor outlet is positioned in association with said second tank inlet;

a third position in which said conveyor inlet is positioned in association with at least one of said first tank outlet and said second tank outlet; and

a transport position.

* * * * *

EXHIBIT 9

US005888044A

United States Patent [19]

Baskerville

[11] **Patent Number: 5,888,044**

[45] **Date of Patent: Mar. 30, 1999**

[54] **SEED CART WITH LOADING/UNLOADING CONVEYOR SYSTEM**

[75] Inventor: **Gregory Eugene Baskerville**, Jolley, Iowa

[73] Assignee: **DewEze Manufacturing, Inc.**, Harper, Kans.

[21] Appl. No.: **655,010**

[22] Filed: **May 29, 1996**

[51] **Int. Cl.**[6] **B65G 67/02**

[52] **U.S. Cl.** **414/523**; 198/311; 198/317; 198/318; 414/345; 414/528

[58] **Field of Search** 414/523, 528, 414/327, 343, 345, 390, 391, 393, 398, 526; 198/311, 312, 317, 318

[56] **References Cited**

U.S. PATENT DOCUMENTS

3,498,483	3/1970	Meharry	414/523
3,863,783	2/1975	Spellman, Jr.	414/523
4,119,223	10/1978	Fischter	198/317 X
4,411,581	10/1983	Niewold	414/523 X
4,433,946	2/1984	Christianson et al.	414/523 X
4,541,767	9/1985	Daberkow	414/523
4,742,938	5/1988	Niewold	414/523 X
5,104,613	4/1992	Humphrey	414/523 X
5,108,249	4/1992	Kinzenbaw et al.	414/523
5,257,893	11/1993	Sevits	414/523
5,484,249	1/1996	Klatt	414/523
5,520,495	5/1996	Sukup	414/523

OTHER PUBLICATIONS

Sales literature of J & M Manufacturing Co., Inc., Fort Recovery, Ohio for Uni-Swivel Hydraulic Augers, Models USA-13 and USA-15, exact publication date unknown, but at least one year prior to the filing of the present application.

Sales literature of Kill Brothers Company, Delphos, Ohio for Grain Box Augers Models 112, 114 & 115, exact publication date unknown, but at least one year prior to the filing of the present application.

Sales literature of Unverferth Manufacturing Co., Inc., Kalida, Ohio for Unverferth 16' Gravity Box Auger, exact publication date unknown, but at least one year prior to the filing of the present application.

Sales literature of Friesen of Iowa, Inc., Storm Lake, Iowa for Bulk Seed Tender, Seed Loading and Delivery System, exact publication date unknown, but at least one year prior to the filing of the present application.

Sales literature of Unverferth Manufacturing Co., Inc., Kalida, Ohio for UM Grain Box Augers, exact publication date unknown, but at least one year prior to the filing of the present application.

Sales literature of Unverferth Manufacturing Co., Inc., Kalida, Ohio for Hydraulic Grain Body Augers, exact publication date unknown, but at least one year prior to the filing of the present application.

(List continued on next page.)

Primary Examiner—David A. Bucci
Attorney, Agent, or Firm—Litman, McMahon, & Brown

[57] **ABSTRACT**

A bulk seed cart includes a seed bin with sloping sides converging at a bottom mounted discharge hopper to which a conveyor is removably connected for unloading seed from the cart. The conveyor is supported by a telescoping boom mounted on the side of the cart and the boom, and attached conveyor, can be raised or lowered via an attached hydraulic lifting cylinder. The boom can be pivoted from side to side and the conveyor is attached to the boom via a swivel assembly, which, once the conveyor is detached from the seed cart, allows the conveyor to be swiveled 180 degrees and attached to a nearby source of seed, such as another seed cart, a stationary bin, a truck or railroad car, etc., with the conveyor being directed toward the seed bin in the seed cart. Seed can thus be unloaded from the source and loaded into the seed cart via the conveyor. The lifting cylinder, the telescoping boom and the conveyor motor are all controllable via a single remote control module.

13 Claims, 4 Drawing Sheets

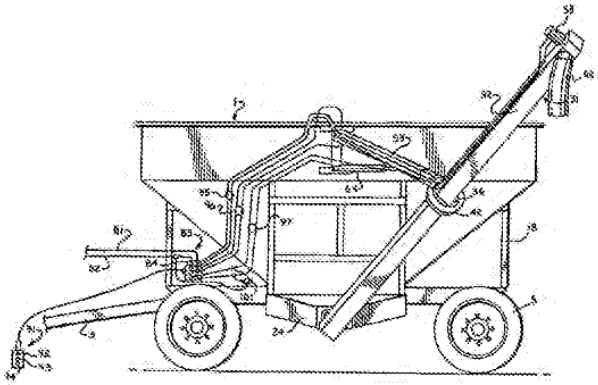

OTHER PUBLICATIONS

Sales literature of Clay Equipment Corporation, Cedar Falls, Iowa for Clay Bulk Seed Handlers, exact publication date unknown, but at least one year prior to the filing of the present application.

Sales literature of Clay Equipment Corporation, Cedar Falls, Iowa for Clay Seed Conveyor, exact publication date unknown, but at least one year prior to the filing of the present application.

Sales literature of Remlinger Manufacturing Co., Inc., Kalida, Ohio for Gravity Box and Folding Truck Augers, exact publication date unknown, but at least one year prior to the filing of the present application.

Sales literature of Christianson Systems, Inc., Blomkest, Minnesota for SEED VAC Bulk Seed Conveyor, exact publication date unknown, but at least one year prior to the filing of the present application.

Sales literature of Sudenga Industries, Inc., George, Iowa for Gravity Wagon Auger, exact publication date unknown, but at least one year prior to the filing of the present invention.

Sales literature of Sudenga Industries, Inc., George, Iowa for Endgate Auger, exact publication date unknown, but at least one year prior to the filing of the present invention.

Sales literature of Sudenga Industries, Inc., George, Iowa for Seed Carton Unloaders, exact publication date unknown, but at least one year prior to the filing of the present invention.

Sales literature of Sudenga Industries, Inc., George, Iowa for Bulk Seed Caddy, exact publication date unknown, but at least one year prior to the filing of the present invention.

Sales literature of Parker Industries, Jefferson, Iowa for Bulk Seed Tender Model 2611S, publication date at least one year prior to the filing of the present invention.

Sales literature of Quality Plus Manufacturing, Oelwein, Iowa for The Bulk Seed Handling System, publication date unknown, not admitted prior art.

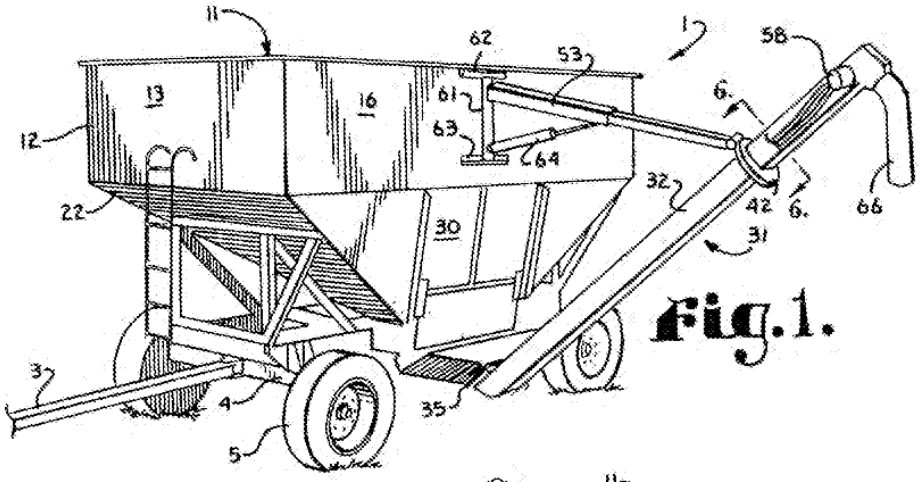

Fig.1.

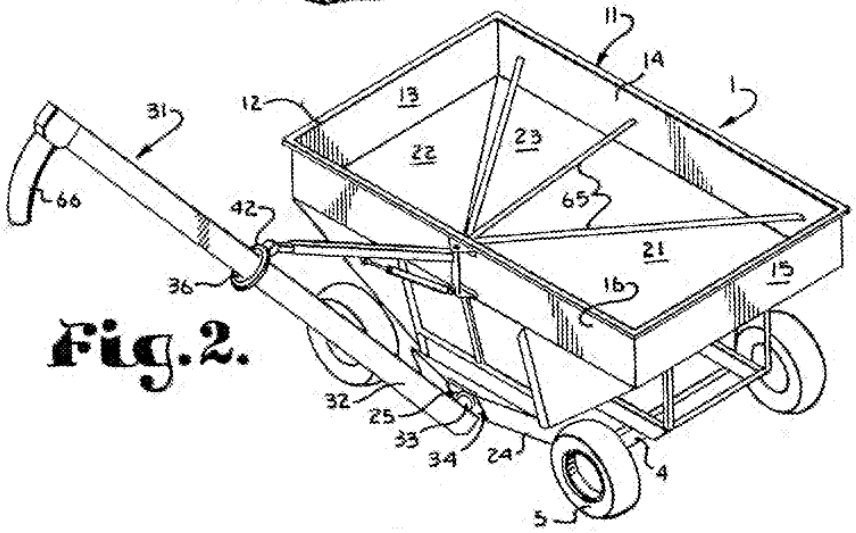

Fig.2.

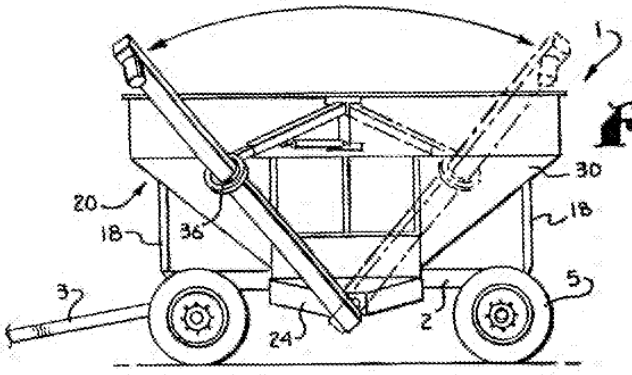

Fig.3.

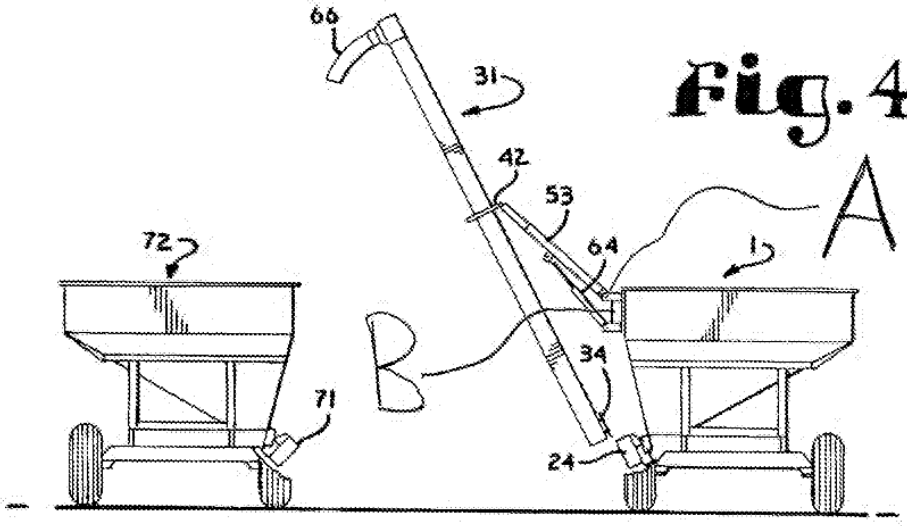

Fig. 4.

Fig. 5.

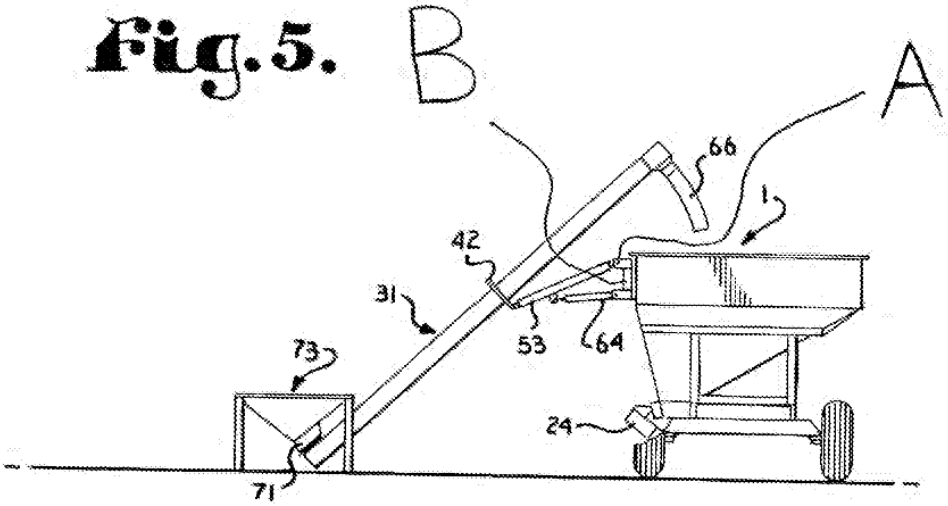

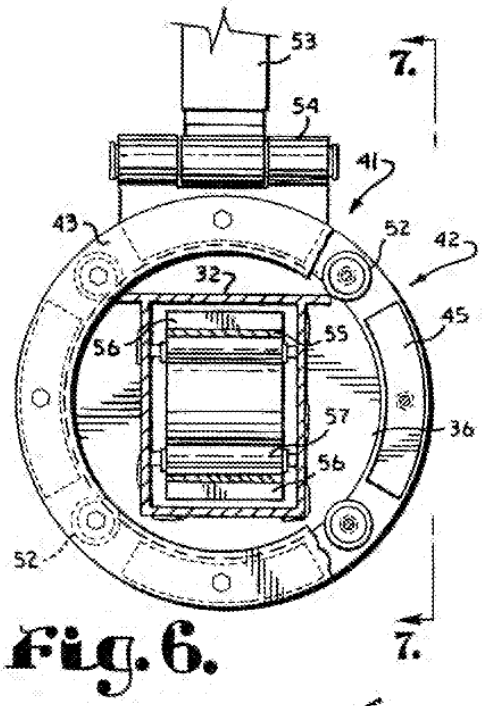

Fig. 6.

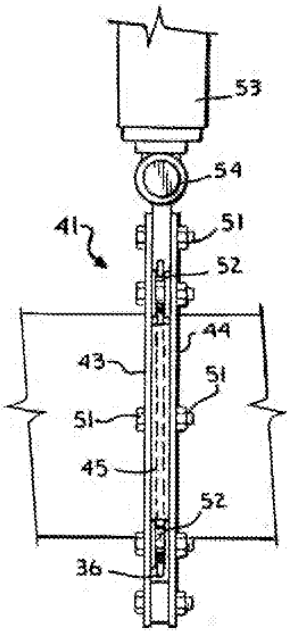

Fig. 7.

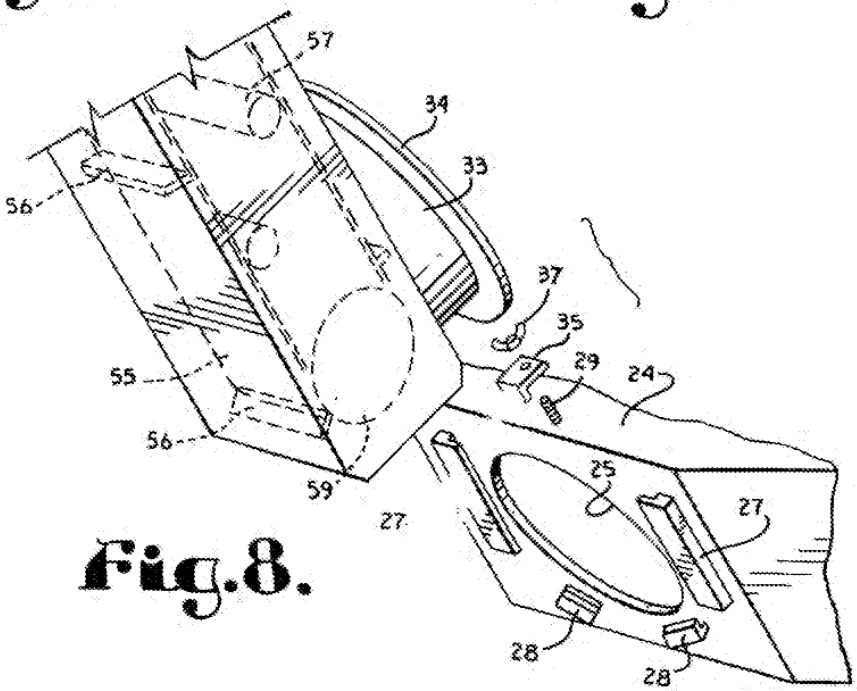

Fig. 8.

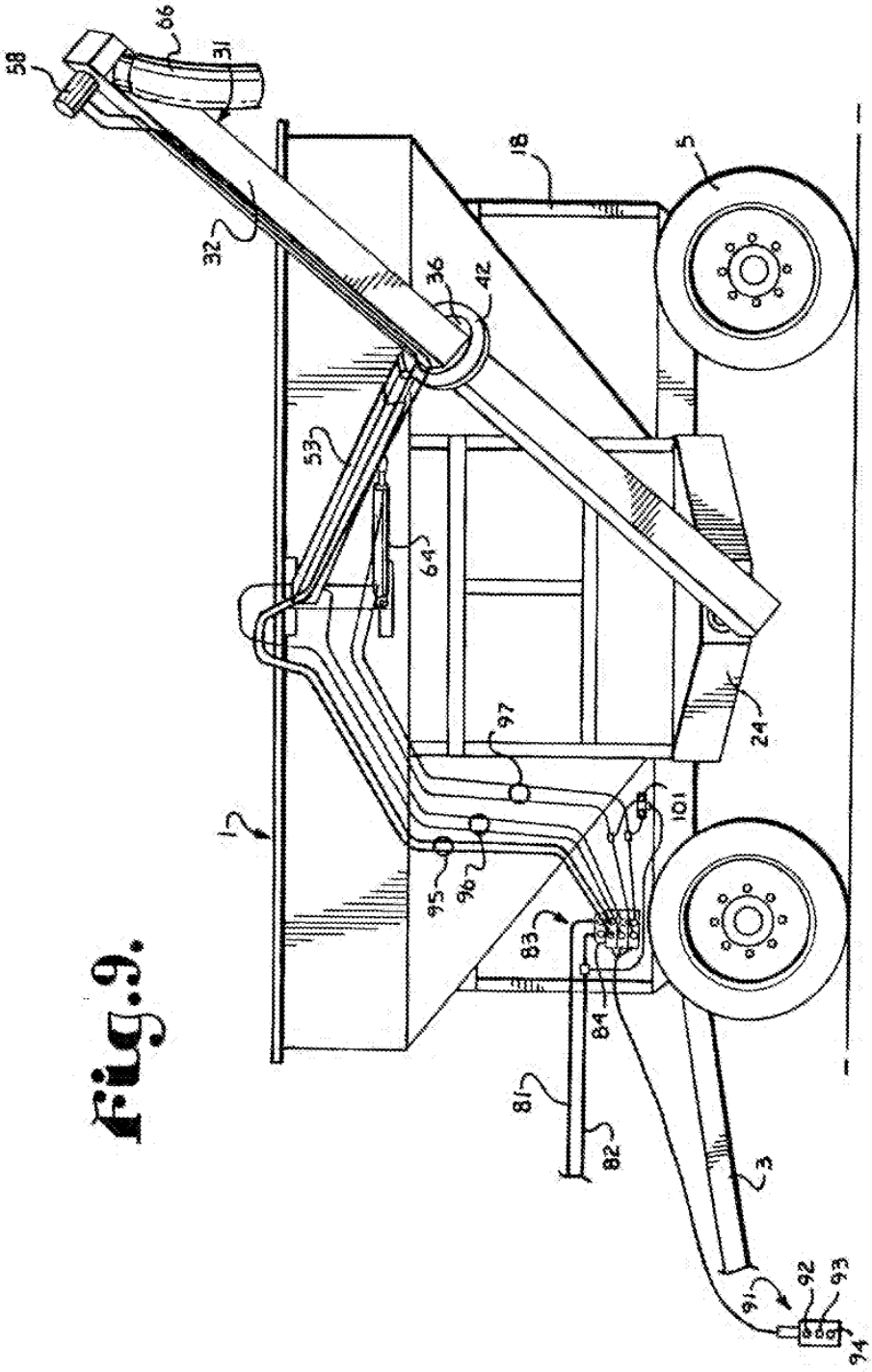

fig.9.

SEED CART WITH LOADING/UNLOADING CONVEYOR SYSTEM

BACKGROUND OF THE INVENTION

1. Field of the Invention

The present invention relates generally to a bulk seed cart of the type used to transport and discharge bulk certified seed and other particulate agricultural products. The inventive cart is equipped with a belt-type conveyor which is detachably coupled to a discharge hopper positioned proximate the bottom of the seed cart. The conveyor is supported by a swivel attached to the end of a telescoping boom assembly. The conveyor can thus be pivoted from side to side and lifted or lowered via the boom assembly. In addition, the conveyor can be removed from its connection to the seed cart, swiveled 180 degrees, and used to load seed into the seed cart.

2. Description of the Related Art

Seed for agricultural operations has traditionally been sold and distributed in relatively small quantities, such as 50 lb. bags. As modern agricultural operations have increased in size and demands for efficiency have increased, seed producers have started delivering seed in larger, bulk quantities. A number of manufacturers have produced specialized carts for handling this bulk seed. These carts typically include a conveyor attached proximate the bottom of the seed cart for off-loading the seed. While grain carts typically use auger-type conveyors, some seed carts, due to the rather fragile nature of the seed, have incorporated belt-type conveyors instead. One version of bulk seed cart is described in U.S. Pat. No. 5,257,893 to Sevits. The Sevits cart includes a frame designed to receive and dispense large bulk bags of seed by dropping them downward into a chute from a spout formed in the bottom of the bag. A built-in auger conveyor then collects the seeds from the chute and conveys them up the conveyor to a destination, such as to bins in a planter or seed drill. The auger convey can be pivoted from side to side to vary the dispensing angle of the seeds.

A problem with seed carts such as that described in the Sevits patent, as well as with more conventional carts which resemble grain carts, but with specialized features for accommodating and dispensing loose bulk seed, is the loading of seed into the cart. For example, in the case of the Sevits cart, heavy bulk bags must be loaded mechanically via a fork lift, crane or the like, which, for field operations, can be impossible, and is, at best, inconvenient for many other operations. In the case of more conventional carts, loose seed must typically be loaded from above the cart, or, if from ground level, via a separate belt or auger-type conveyor attachable to seed sources such as storage bins, trucks, etc. Again, such a conveyor is not always readily available, particularly for field operations.

Accordingly, it is clear that a need exists for an improved bulk seed cart with a self contained conveyor which can be used both for loading and for unloading the seed cart. Such a conveyor should be capable of both pivoting side to side to change unloading angles, and should be capable of being removed from the seed cart, swiveled at least 180 degrees, and attached to a seed source such that it can be used to load seed into the cart as well as unload seed out of the cart.

SUMMARY OF THE INVENTION

In the practice of the present invention, a bulk seed cart includes a seed bin with sloping sides converging at a bottom mounted discharge hopper. The hopper includes a

discharge opening and a motor driven belt-type conveyor is removably connected to the hopper for unloading seed from the cart and selectively discharging the seed into receptacles, such as seed bins on a planter or seed drill. The conveyor is supported by a telescoping boom mounted on the side of the cart and the boom, and attached conveyor, can be raised or lowered via an attached hydraulic lifting cylinder. The boom can be pivoted from side to side and the conveyor is attached to the boom via a swivel assembly including a swivel plate attached to the conveyor and a swivel ring attached to the boom. The swivel assembly, once the conveyor is detached from the seed cart, allows the conveyor to be swiveled 180 degrees and attached to a nearby source of seed, such as another seed cart, a stationary bin, a truck or railroad car, etc., with the conveyor being directed toward the a seed bin in the seed cart. Seed can thus be unloaded from the source and loaded into the seed cart via the conveyor. The lifting cylinder, the telescoping boom and the conveyor hydraulic motor are all controllable via a single remote control module.

OBJECTS AND ADVANTAGES OF THE PRESENT INVENTION

The objects and advantages of the present invention include: providing an improved bulk seed cart; providing such a seed cart with a storage bin which has sloping sidewalls converging into a discharge hopper attached to the bottom of the bin; providing such a seed cart with a conveyor which is removably attachable to the discharge hopper for unloading seed from the cart; providing such a seed cart in which the conveyor is supported by a telescoping boom which can be selectively raised and lowered and extended and retracted to position the conveyor at a desired angle and in a desired direction; providing such a seed cart in which the conveyor is attached to the boom via a swivel assembly; providing such a seed cart in which the conveyor can be removed from its connection to the cart discharge hopper, swiveled 180 degrees, and attached to a nearby source of bulk feed; providing such a seed cart which can be directed from the source of seed back into the top of the storage bin on the seed cart so as to load seed from the source into the seed cart; providing such a seed cart conveyor which is driven via a hydraulic motor; providing such a seed cart with a push button remote control module which controls the hydraulics for the telescoping boom, the hydraulic lifting cylinder and the conveyor hydraulic motor; and providing such a seed cart which is economical to manufacture, efficient and convenient in operation, capable of a long operating life and which is particularly well adapted for the proposed usage thereof.

Other objects and advantages of this invention will become apparent from the following description taken in conjunction with the accompanying drawings wherein are set forth, by way of illustration and example, certain embodiments of this invention.

The drawings constitute a part of this specification and include exemplary embodiments of the present invention and illustrate various objects and features thereof.

BRIEF DESCRIPTION OF THE DRAWINGS

FIG. 1 is a perspective view of a seed cart in accordance with the present invention with an attached conveyor supported by a telescoping boom and lifting cylinder.

FIG. 2 is another perspective view of the seed cart of FIG. 1, illustrating the interior of the seed bin and a number of cross braces for bracing the telescoping boom and the lifting cylinder.

FIG. 3 is a side elevational view of the seed cart of FIG. 1, illustrating the conveyor pivoted to the left in solid lines and, in dotted lines pivoted to the right.

FIG. 4 is a partially schematic end elevational view of the seed cart of FIG. 1 along with a complementary seed source cart which serves as a source of seed for the inventive cart, and with the conveyor being removed from engagement with the inventive cart for connection to the complementary seed source cart.

FIG. 5 is a partially schematic end elevational view of the seed cart of FIG. 1 along with a complementary stationary seed source bin, and with the conveyor swiveled 180 degrees and inserted into a mating discharge hopper in the bin.

FIG. 6 is a greatly enlarged, fragmentary cross-sectional view, taken along line 6—6 of FIG. 1, illustrating a two dimensional swivel mount for the seed cart conveyor.

FIG. 7 is a greatly enlarged, fragmentary cross-sectional view, taken along line 7—7 of FIG. 6, and further illustrating the structure of the swivel mount for the seed cart conveyor.

FIG. 8 is a greatly enlarged, fragmentary perspective view illustrating the removable connection of the belt-type conveyor to the seed cart discharge hopper with the conveyor belt shown in phantom lines.

FIG. 9 is an enlarged, partially schematic, side elevational view of the seed cart of FIG. 1, illustrating the hydraulic system and controls for the conveyor, the telescoping boom and the lifting cylinder.

DETAILED DESCRIPTION OF THE PREFERRED EMBODIMENTS

I. Introduction and Environment

As required, detailed embodiments of the present invention are disclosed herein; however, it is to be understood that the disclosed embodiments are merely exemplary of the invention, which may be embodied in various forms. Therefore, specific structural and functions details disclosed herein are not to be interpreted as limiting, but merely as a basis for the claims and as a representative basis for teaching one skilled in the art to variously employ the present invention in virtually any appropriately detailed structure.

Certain terminology will be used in the following description for convenience and reference only and will not be limiting. For example, the words "up", "down", "right" and "left" will refer to directions in the drawings to which reference is made. The words "in" and "out" will refer to directions toward and away from, respectively, the geometric center of the structure being referred to. Said terminology will include the words specifically mentioned derivatives thereof and words of similar import.

II. Seed Cart

Referring to the drawings in more detail, reference numeral 1 in FIGS. 1–3 generally designates a seed cart in accordance with the present invention. The cart 1 comprises a lower frame 2 connected to a tongue 3. The frame 2 is supported by two axles 4, each with a pair of wheels 5 attached thereto.

A grain bin, generally indicated as 11, comprises an upper portion 12 with substantially vertical sidewalls 13–16. The grain bin 11 is supported by a pair of rectangular frames 18 which are attached to and extend upward from respective opposite ends of the lower frame 2. Extending downward from the upper portion 12, the bin includes a lower portion 20 with three triangular sidewall extensions 21, 22, and 23 (FIG. 2) each of which tapers inward and downward to converge at an inlet (not shown) which opens into a discharge hopper 24. In a conventional fashion, this structure directs all seed or other particulate material stored in the bin 11 toward the discharge hopper 24. The discharge hopper 24 slopes downward and inward toward a circular discharge opening 25 such that all seed or other particulate material in the hopper 24 is directed toward the circular discharge opening 25. The discharge hopper 24 includes a number of brackets 27 and 28 attached to the outside thereof and which partially surround the circular opening 25. A threaded stud 29 extends upward from the top of the discharge hopper 24. The lower portion 20 of the bin 11 includes a fourth triangular sidewall 30 which is oriented substantially vertically.

A belt-type conveyor 31 includes an elongate housing 32 which is preferably rectangular in cross section. A circular flange 33 is connected to and extends outward from the bottom of the conveyor housing 32. The flange 33 mates with the circular opening 25 in the hopper 24 (FIG. 8). The circular flange 33 has attached thereto a perimeter circular plate 34 which is insertable into the brackets 27 and 28 and is retained in position adjacent the opening 25 via a securing wedge 35 fitted onto the threaded stud 29 and held there via a wing nut 37. The conveyor 31 is thus removably coupled to the hopper 24. The conveyor housing 32 is pivotable from side to side relative to the hopper 24, as shown in FIG. 3, while remaining attached thereto.

Approximately two-thirds of the way up the conveyor housing 32, a circular swivel plate 36 is welded about the periphery of the housing 32. The swivel plate 36 forms a part of a swivel assembly 41 which also includes a swivel ring assembly 42. The swivel assembly 41 is best illustrated in FIGS. 6 and 7. The swivel ring assembly 42 includes an upper and a lower ring 43 and 44, respectively, separated by a plurality of spacing bars 45 arrayed about the periphery of the rings 43 and 44. A plurality of threaded bolts and mating nuts 51 extend through the rings 43 and 44 and the spacing bars 45 to clamp the rings 43 and 44 together in a spaced configuration. A plurality of bearing rollers 52 are rotatably held between the rings 43 and 44, with the rollers 52 supporting and engaging the swivel plate 36 such that the swivel plate 36, and the attached conveyor housing 32, can freely swivel 180 degrees or more within the swivel ring assembly 42. The swivel ring assembly 42 is pivotably attached to a telescoping boom 53 via a hinge 54.

FIG. 6 also illustrates the interior of the conveyor housing 32 which encloses an endless conveyor belt 55 which carries a plurality of spaced paddles 56 for carrying seed upward through the conveyor 31. A number of idler rollers 57 keep the belt 55 apart as it passes over itself and a hydraulic conveyor drive motor 58 (FIG. 1) is connected to drive the belt 55. A return conveyor roller 59 is positioned proximate the bottom of the conveyor housing 32 near the circular flange 33.

The telescoping boom 53 is attached near the top of a vertically oriented tube 61 which tube 61 is, in turn, pivotably attached to the upper sidewall 16 of the seed bin 11 via a pair of supports 62 and 63. A hydraulic lifting cylinder 64 is attached at one end to the tube 61 and at a second end to the telescoping boom 53. A plurality of cross braces 65 are positioned inside of the seed bin 11 in order to provided enhanced strength and rigidity to the sidewall 16, and thus to provide adequate support for the telescoping boom 53 and the lifting cylinder 64.

III. Operation

The conveyor 31 can thus be used to unload seed from the cart 1 via the discharge hopper 24, which seed is carried up the conveyor housing 32 via the belt 55 and paddles 56 to the top thereof where the seed enters a flexible discharge tube

66. The combination of the telescoping boom 53, the lifting cylinder 64 and the pivotable connection of the conveyor 31 to the discharge hopper 24 allows discharged seed to be directed at virtually any desired location or height along the conveyor side of the seed cart 1.

FIGS. 4 and 5 illustrate the enhanced versatility of the inventive seed cart 1 and conveyor 31. In FIG. 4, the combination of the lifting cylinder 64 and the telescoping boom 53 are used to lift the conveyor 31 out of engagement with the discharge hopper 24 in the seed cart 1. The conveyor 31 is then swiveled 180 degrees relative to the boom 53 via the attached swivel plate 36 and the swivel ring assembly 42. The lifting cylinder 64 and the boom 53 are then lowered, thus allowing the conveyor 31 to be engaged with a mating discharge hopper 71 in a companion seed cart 72 (FIG. 4) or a similar hopper 71 in a compsnion seed bin 73 (FIG. 5). The conveyor 31, in addition to performing an unloading function, thus also serves a dual function of allowing the seed cart 1 to be loaded from an exterior seed source, such as the cart 72 or the stationary bin 73. Of course, while the cart 72 and the bin 73 have been shown as a seed source for loading the seed cart 1, any suitable source of seed can be connected to the conveyor 31, such as a semi-trailer or railroad car, silo, etc.

IV. Hydraulic System and Control

FIG. 9 illustrates the hydraulic system and control for operation of the seed cart 1. A hydraulic pressure line 81 and a return line 82 are connected to a hydraulic pump on a pulling tractor (not shown). The lines 81 and 82 terminate in a three function solenoid valve 83 equipped with three solenoid controlled valves 84–86. The solenoid valves 84–86 are connected to a wired remote control module 91 equipped with three two-way switches 92–94 which switches 92–94 respectively control the valves 84–86. The solenoid valve 84 is connected to hydraulic line pair 95 which selectively supply and return pressurized hydraulic fluid to and from the hydraulic conveyor drive motor 58. The valve 85 is connected to line pair 96 which selectively supplies and returns pressurized hydraulic fluid to the telescoping boom 53. Finally, the valve 86 is connected to line pair 97 which selectively supplies and returns pressurized hydraulic fluid to the lifting cylinder 64. A dampering float control 101 is provided to bypass excess pressure from the lifting cylinder 64 to dampen any dramatic shifts in the position of the boom 53.

With the seed cart hydraulic system and control illustrated in FIG. 9, an operator can remotely control the lifting and lowering of the boom 53 via the lifting cylinder 64, the extension and retraction of the boom 53 itself, and the on or off state of the conveyor drive motor 58. This allows for much safer and more reliable operation of the seed cart 1 by allowing an operator positioned on the ground to achieve this three way control. It should be noted that, while the remote control module 91 has been illustrated as a wired connection, a radio linked control module could be substituted therefor.

While the cart 1 has been described herein as a bulk seed cart, it should be noted that the present invention, including the detachable, swiveling conveyor 31, can also be used advantageously with grain carts, trucks or other granular materials carriers. While the conveyor 31 has been described as a belt-type conveyor due to the relatively fragile nature of bulk seed, an auger-type conveyor could also be detachable connected in a similar fashion.

It is thus to be understood that while certain forms of the present invention have been illustrated and described herein, it is not to be limited to the specific forms or arrangement of parts described and shown.

What is claimed and desired to be secured by Letters Patent is as follows:

1. A storage and transport vehicle comprising:

a. a discharge point;

b. a storage bin connected to said discharge point;

c. a conveyor detachably connectable to said discharge point, said conveyor including an elongate housing; and

d. a conveyor support structure, said support structure including a swivel assembly attaching said conveyor housing to said support structure and also including a telescoping boom with an inner end pivotably attached to an exterior side of said bin and a cylinder attached to said boom, said swivel assembly being attached to an outer end of said boom, thus allowing said conveyor to be selectively swiveled at least 180 degrees about said outer end of said boom.

2. A vehicle as in claim 1, wherein said conveyor includes a drive motor, said vehicle further comprising a remote control which allows an operator to selectively extend and retract said telescoping boom, to selectively extend and retract said lifting cylinder, and to selectively start and stop said conveyor motor.

3. A vehicle as in claim 1, wherein said conveyor is a belt-type conveyor with an endless belt driven by said motor, said belt supporting a plurality of paddles for transporting granular material along an interior of said conveyor housing.

4. A storage and transport vehicle comprising:

a. a discharge point;

b. a storage bin connected to said discharge point;

c. a conveyor detachably connectable to said discharge point, said conveyor including an elongate housing; and

d. a conveyor support structure, said support structure including a swivel assembly attaching said conveyor housing to said support structure, said swivel assembly allowing said conveyor to be selectively swiveled at least 180 degrees about said support structure said swivel assembly comprising

e. a swivel plate rigidly secured about said conveyor housing; and

f. a swivel ring assembly pivotably attached to said support structure, said swivel ring assembly accommodating said swivel plate such that said swivel plate, and said attached conveyor, can be freely swiveled about a longitudinal axis of said conveyor housing.

5. A vehicle as in claim 4, wherein said swivel ring assembly comprises:

a. an upper and a lower swivel ring; and

b. a plurality of bearings connected between said upper and lower swivel rings, said bearings arrayed about the periphery of said swivel plate such that said swivel plate is supported by and can be swiveled relative to said bearings.

6. A storage and transport vehicle comprising:

a. a discharge point;

b. a storage bin connecting to said discharge point;

c. a conveyor detachably connectable to said discharge point, said conveyor including an elongate housing; and

d. a conveyor support structure, said support structure including a telescoping boom having an inner end pivotably attached to said bin and a swivel assembly pivotably attached proximate an outer end of said

boom, said swivel assembly also being attached to said conveyor housing so as to allow said conveyor to be selectively swiveled at least 180 degrees relative to said telescoping boom, and a lifting cylinder attached directly to said telescoping boom, said lifting cylinder selectively lifting said boom and the attached swivel assembly and conveyor.

7. A vehicle as in claim 8, wherein said conveyor includes a drive motor, said vehicle further comprising a remote control which allows an operator to selectively extend and retract said telescoping boom, to selectively extend and retract said lifting cylinder, and to selectively start and stop said conveyor motor.

8. A vehicle as in claim 6, wherein said conveyor is a belt-type conveyor with an endless belt driven by said motor, said belt supporting a plurality of paddles for transporting granular material along an interior of said conveyor housing.

9. A storage and transport vehicle comprising:

a. a discharge point;

b. a storage bin connecting to said discharge point;

c. a conveyor detachably connectable to said discharge point, said conveyor including an elongate housing; and

d. a conveyor support structure, said support structure including a telescoping boom having an inner end pivotably attached to said bin and a swivel assembly pivotably attached proximate an outer end of said boom, said swivel assembly also being attached to said conveyor housing so as to allow said conveyor to be selectively swiveled at least 180 degrees relative to said telescoping boom said swivel assembly comprising:

i. a swivel plate rigidly secured about said conveyor housing; and

ii. a swivel ring assembly pivotably attached to said boom, said swivel ring assembly accommodating said swivel plate such that said swivel plate, and said attached conveyor, can be freely swiveled about a longitudinal axis of said conveyor housing.

10. A conveyor system for attachment to a storage container, said storage container including a discharge point, said system comprising:

a. a conveyor detachably connectable to said discharge point, said conveyor including an elongate housing;

b. a conveyor support structure, said support structure including a telescoping boom with an inner end pivotably attachable to said container, and a swivel assembly pivotably attached proximate an outer end of said boom, said swivel assembly also being attached to said conveyor housing so as to allow said conveyor to be selectively swiveled at least 180 degrees relative to said telescoping boom; and

c. a lifting cylinder attached between said telescoping boom and said container.

11. A conveyor system as in claim 10, said conveyor including a drive motor, said conveyor system further comprising a remote control which allows an operator to selectively extend and retract said telescoping boom, to selectively extend and retract said lifting cylinder, and to selectively start and stop said conveyor motor.

12. A conveyor system as in claim 10, wherein said conveyor is a belt-type conveyor with an endless belt driven by said motor, said belt supporting a plurality of paddles for transporting granular material along an interior of said conveyor housing.

13. A conveyor system for attachment to a storage container, said storage container including a discharge point, said system comprising:

a. a conveyor detachably connectable to said discharge point, said conveyor including an elongate housing;

b. a conveyor support structure, said support structure including a telescoping boom with an inner end pivotably attachable to said container, and a swivel assembly pivotably attached proximate an outer end of said boom, said swivel assembly also being attached to said conveyor housing so as to allow said conveyor to be selectively swiveled at least 180 degrees relative to said telescoping boom; and

c. a lifting cylinder attached to said telescoping boom said swivel assembly comprising

i. a swivel plate rigidly secured about said conveyor housing; and

ii. a swivel ring assembly pivotably attached to said boom, said swivel ring assembly accommodating said swivel plate such that said swivel plate, and said attached conveyor, can be freely swiveled about a longitudinal axis of said conveyor housing.

* * * * *

EXHIBIT 10

Unverferth models 3750, 2750

Seed Runner

Exclusive self-loading design from the High IQ line*

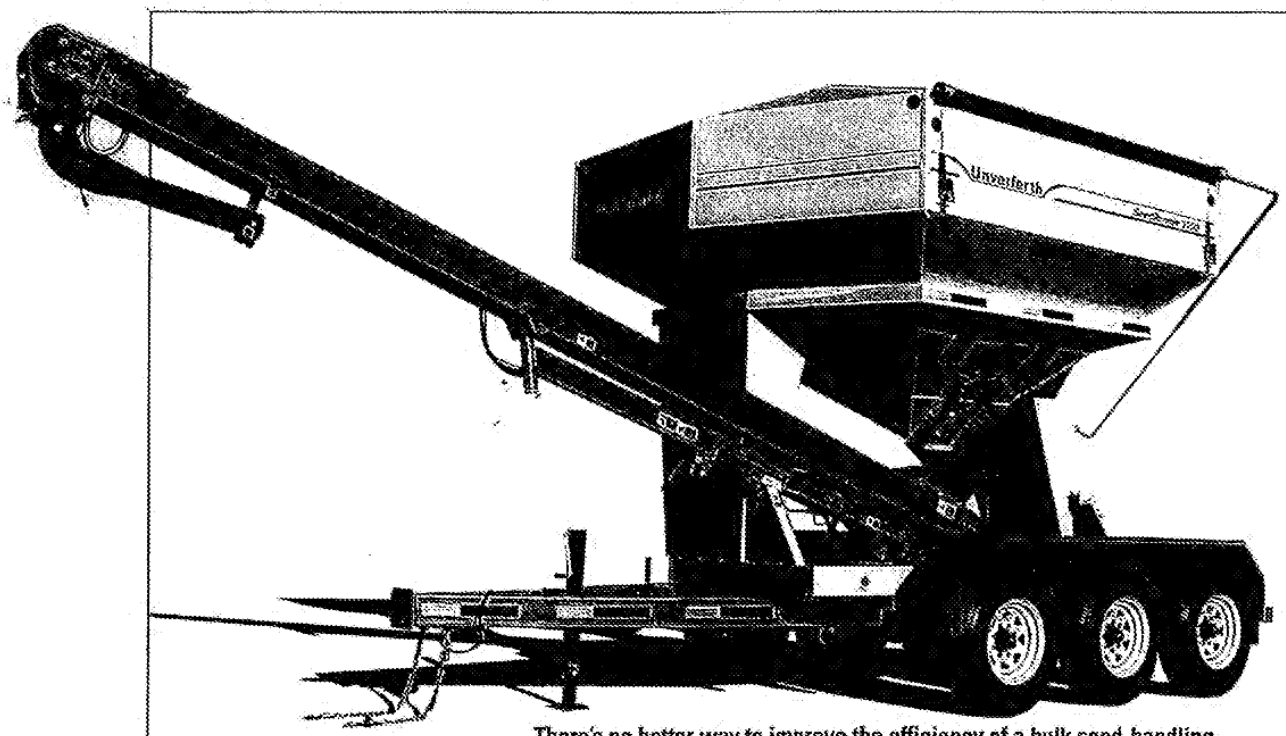

There's no better way to improve the efficiency of a bulk seed-handling system than with the double-duty Unverferth Seed Runner.

The dual-compartment Unverferth Seed Runner not only delivers seed direct to your planter or drill, its innovative, patented design allows it to fill itself! The model 3750 has a capacity of 375 cubic feet (375, 50-pound seed units); capacity for the model 2750 is 275 cubic feet (275, 50-pound seed units).

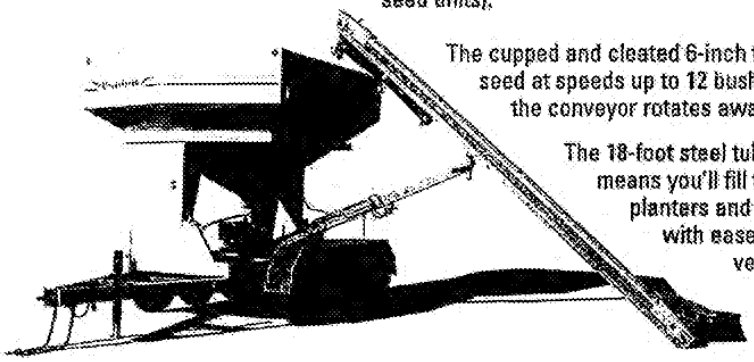

The cupped and cleated 6-inch tube conveyor gently carries seed at speeds up to 12 bushels per minute. For self-loading, the conveyor rotates away from the unit.

The 18-foot steel tube with telescoping downspout means you'll fill the far corners of the largest planters and drills, and even bulk-fill planters, with ease. Dual hydraulic levers for conveyor control are located at both the hopper and downspout. An optional electronic on/off control is also available.

Unverferth

I Q

UM-PKan0000289

UM-PK0000965

Seed Runner: Exclusive self-loading design

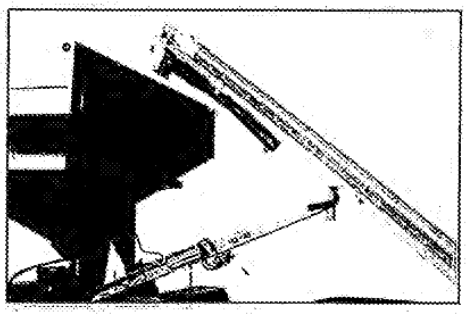

- Unloading efficiency is enhanced by the Unverferth Seed Runner's patented conveyor design allowing it to rotate a full 180° for self-loading
- The conveyor can also be positioned to 90° for material transfer between two other units such as bulk seed container to gravity box
- The hinged, two-stage telescoping downspout swings out of the way and locks back when filling the Seed Runner
- Dual viewing windows for easily monitoring contents during loading and unloading
- Powered by a 9 h.p. gas engine with optional electric start

- 62 inches of hydraulically operated vertical-height adjustment for easy movement into the loading or transport positions
- The conveyor base features rollers, pivots a full 180° and can be locked into place for unloading
- Easy-opening 5" x 6" doors with rubber funnel regulate grain flow into the conveyor for fast unloading and 100 percent seed use
- The top-mounted, 6-cubic-inch hydraulic motor pulls the belt forward, keeping it tight for the most efficient seed movement and reduced motor stress

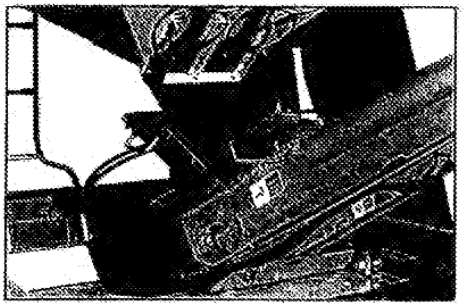

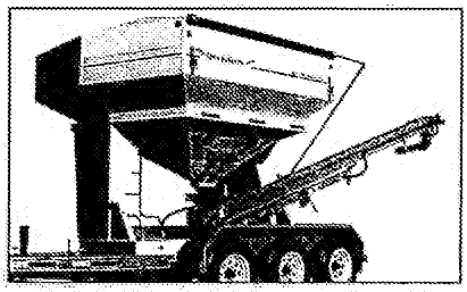

- Hinged door at bottom of conveyor for complete cleanout
- The conveyor locks into the transport position at either the front or back of the tender
- Standard marker lights and reflective striping enhance transport safety
- Optional scale for verifying the quantity of seed delivered/loaded
- Steep-sloped sidewalls ensure fast and complete unloading
- Standard snug-fitting, 8-ounce, roll-over tarp protects contents from the weather and stays tightly locked, even at highway speeds

Mount the Unverferth Seed Runner on your own truck or trailer or choose the heavy-duty Seed Runner trailer:

- **Heavy-duty steel construction**
- **Rubber-cushioned suspension and highway-rated tires for a smooth ride**
- **Triple axles with electric brakes for model 3750**
- **Dual axles with electric brakes for model 2750**
- **Includes pintle hitch, lights, reflectors and transport chains for enhanced highway safety**

Due to continuing improvements in the design and manufacture of Unverferth products, all specifications contained herein are subject to change without notice

See your nearest Unverferth dealer today for complete details about the Seed Runner, check our Web site at www.unverferth.com or call 1-800-322-6301.

U.S. Patent #5588644; additional patents applied for

PRINTED WITH SOY INK

©2006 Unverferth Manufacturing Co., Inc.
Printed in U.S.A.

®,™ Trademarks, registered or applied for, of Unverferth Manufacturing Co., Inc., Kalida, OH

Additional facilities in California, Georgia, Iowa, Nebraska, North Dakota, Oregon and Canada

Unverferth
SINCE 1948

P.O. Box 357 • Kalida, Ohio 45853
(419) 532-3121 • FAX (419) 532-2468
unverferth.com
1-800-322-6301

Farm Safety 4 Just Kids

Please remind all family members to use caution and follow recommended safety practices when around all farm equipment. Unverferth Mfg. Co., Inc. supports the efforts of Farm Safety 4 Just Kids.

USTR02020M05

UM-PKan0000290

EXHIBIT 11

US007500817B2

(12) **United States Patent**
Furrer et al.

(10) **Patent No.: US 7,500,817 B2**
(45) **Date of Patent: Mar. 10, 2009**

(54) **AGRICULTURAL SEED TENDER WITH MODULAR STORAGE CONTAINERS**

(75) Inventors: **G. Jason Furrer**, N. Remington, IN (US); **Todd W. Kaeb**, Loda, IL (US); **Steven R. Walder**, Hoopeston, IL (US)

(73) Assignee: **KSI Conveyors, Inc.**, Cissna Park, IL (US)

(*) Notice: Subject to any disclaimer, the term of this patent is extended or adjusted under 35 U.S.C. 154(b) by 305 days.

(21) Appl. No.: **11/348,659**

(22) Filed: **Feb. 7, 2006**

(65) **Prior Publication Data**

US 2006/0180062 A1 Aug. 17, 2006

Related U.S. Application Data

(60) Provisional application No. 60/653,876, filed on Feb. 16, 2005.

(51) **Int. Cl.**

B65F 1/00	(2006.01)
B65F 3/00	(2006.01)
B65G 41/00	(2006.01)
B60P 1/00	(2006.01)
G01F 11/10	(2006.01)

(52) **U.S. Cl.** **414/522**; 414/523; 222/371; 198/311; 198/312

(58) **Field of Classification Search** 222/371; 198/312, 311; 414/523, 522
See application file for complete search history.

(56) **References Cited**

U.S. PATENT DOCUMENTS

4,503,803 A * 3/1985 Barnes 118/303

* cited by examiner

Primary Examiner—Christopher J. Novosad
(74) *Attorney, Agent, or Firm*—Wildman, Harrold, Allen & Dixon LLP

(57) **ABSTRACT**

A trailer having support wheels and a frame adapted to be hitched to a truck, includes a support track extending longitudinally for supporting an unload conveyor. The conveyor is mounted by a turret to the support track and, thus, to the trailer frame, permitting the turret to move in a fore-to-aft direction, as well as to rotate about the vertical for about 180°, providing flexibility in use as well as transport and storage. A support module, carrying at least one storage container is mounted on the trailer frame. The storage containers may be provided in a number of different sizes and they may be arranged in various configurations suiting the user's needs. The turret is positioned along the track beneath a desired seed container, which may then be unloaded by the conveyor to fill a planter seed box or grain drill, or for other seed handling applications.

9 Claims, 10 Drawing Sheets

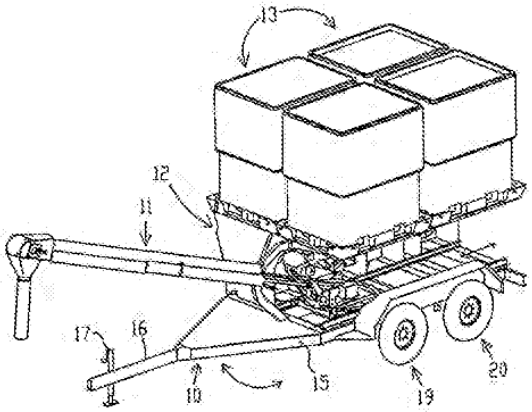

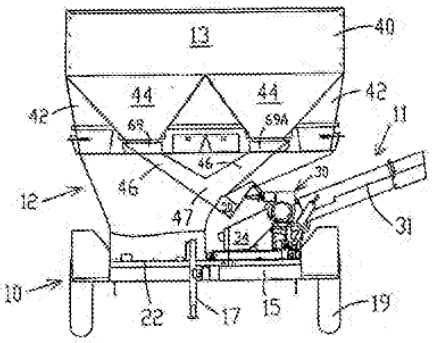

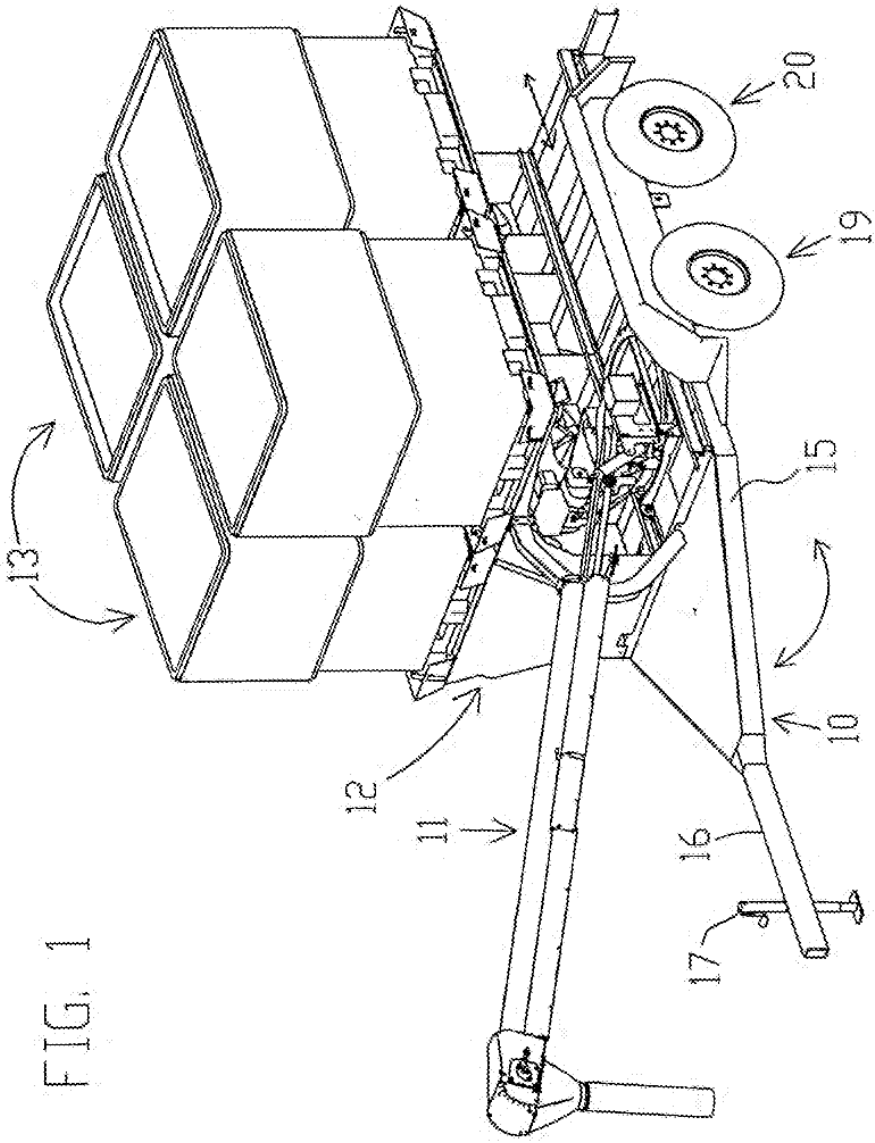

FIG. 1

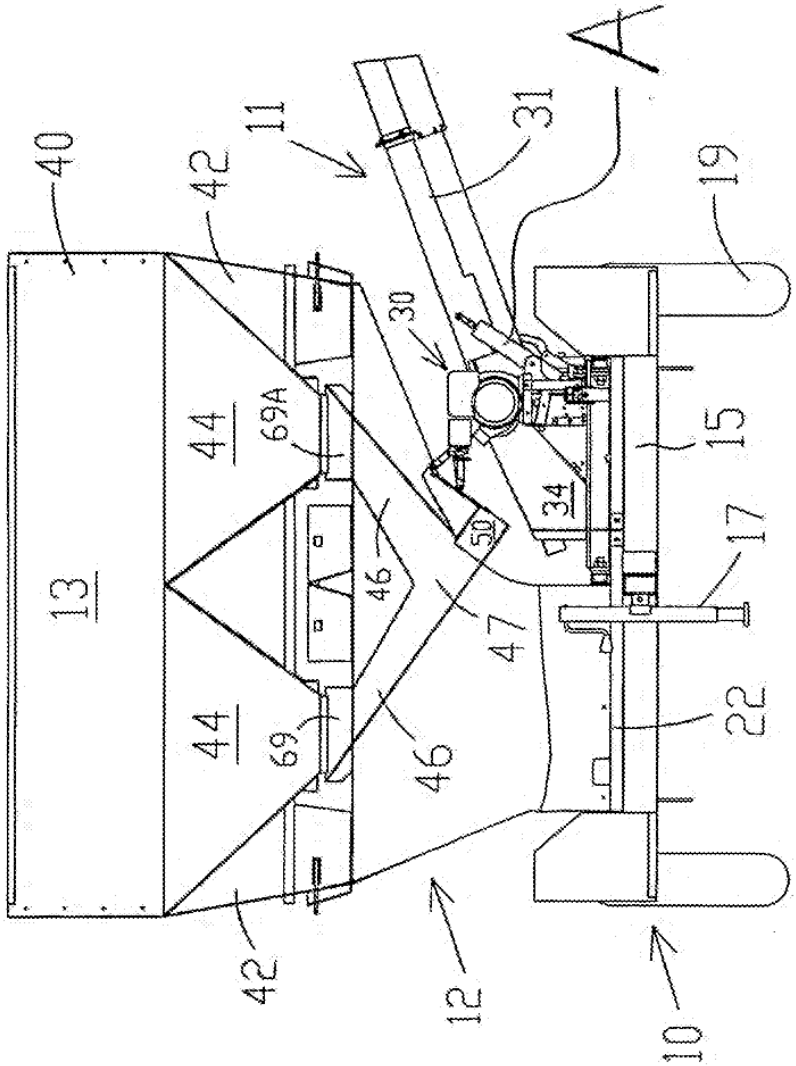

FIG. 1A

US007500817B2

(12) **United States Patent**
Furrer et al.

(10) **Patent No.: US 7,500,817 B2**
(45) **Date of Patent: Mar. 10, 2009**

(54) **AGRICULTURAL SEED TENDER WITH MODULAR STORAGE CONTAINERS**

(75) Inventors: **G. Jason Furrer**, N. Remington, IN (US); **Todd W. Kaeb**, Loda, IL (US); **Steven R. Walder**, Hoopeston, IL (US)

(73) Assignee: **KSI Conveyors, Inc.**, Cissna Park, IL (US)

(*) Notice: Subject to any disclaimer, the term of this patent is extended or adjusted under 35 U.S.C. 154(b) by 305 days.

(21) Appl. No.: **11/348,659**

(22) Filed: **Feb. 7, 2006**

(65) **Prior Publication Data**

US 2006/0180062 A1 Aug. 17, 2006

Related U.S. Application Data

(60) Provisional application No. 60/653,876, filed on Feb. 16, 2005.

(51) **Int. Cl.**

B65F 1/00	(2006.01)
B65F 3/00	(2006.01)
B65G 41/00	(2006.01)
B60P 1/00	(2006.01)
G01F 11/10	(2006.01)

(52) **U.S. Cl.** **414/522**; 414/523; 222/371; 198/311; 198/312

(58) **Field of Classification Search** 222/371; 198/312, 311; 414/523, 522
See application file for complete search history.

(56) **References Cited**

U.S. PATENT DOCUMENTS

4,503,803 A * 3/1985 Barnes 118/303

* cited by examiner

Primary Examiner—Christopher J. Novosad
(74) *Attorney, Agent, or Firm*—Wildman, Harrold, Allen & Dixon LLP

(57) **ABSTRACT**

A trailer having support wheels and a frame adapted to be hitched to a truck, includes a support track extending longitudinally for supporting an unload conveyor. The conveyor is mounted by a turret to the support track and, thus, to the trailer frame, permitting the turret to move in a fore-to-aft direction, as well as to rotate about the vertical for about 180°, providing flexibility in use as well as transport and storage. A support module, carrying at least one storage container is mounted on the trailer frame. The storage containers may be provided in a number of different sizes and they may be arranged in various configurations suiting the user's needs. The turret is positioned along the track beneath a desired seed container, which may then be unloaded by the conveyor to fill a planter seed box or grain drill, or for other seed handling applications.

9 Claims, 10 Drawing Sheets

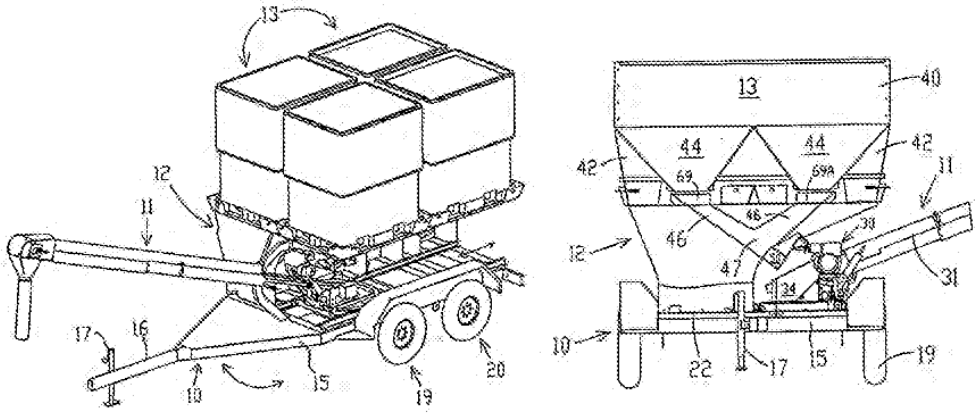

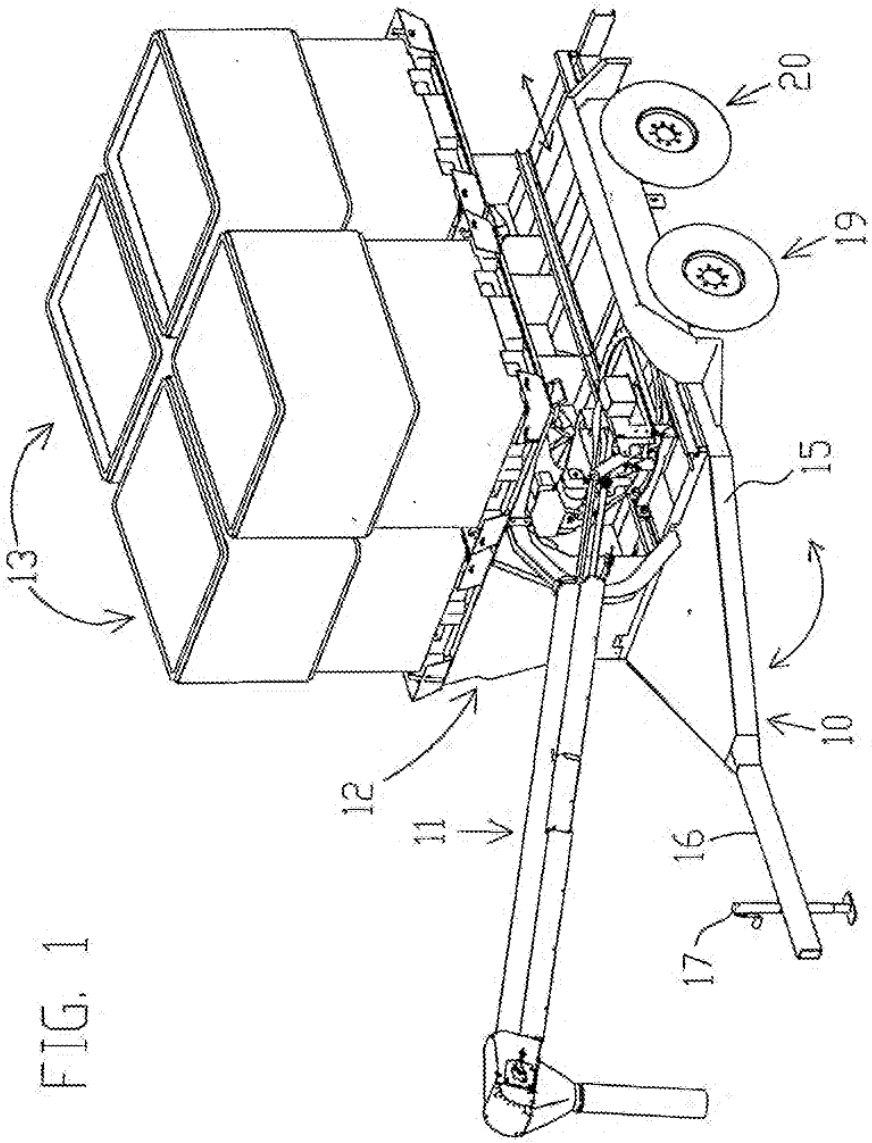

FIG. 1

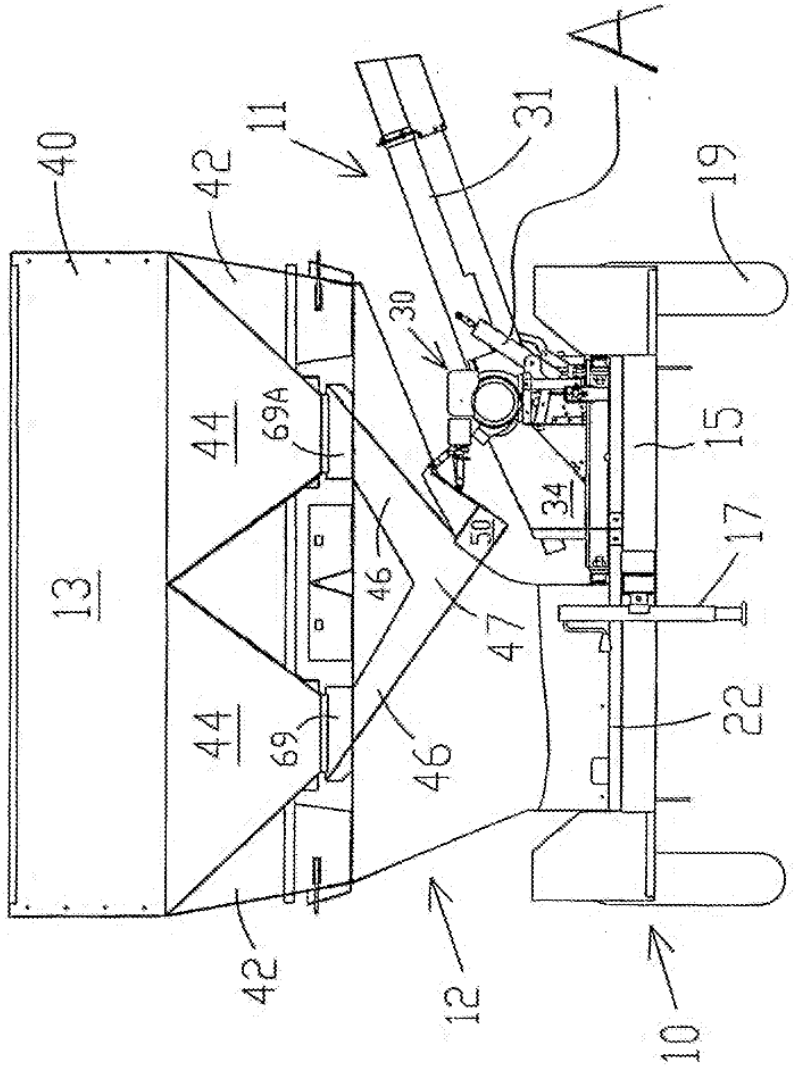

FIG. 1A

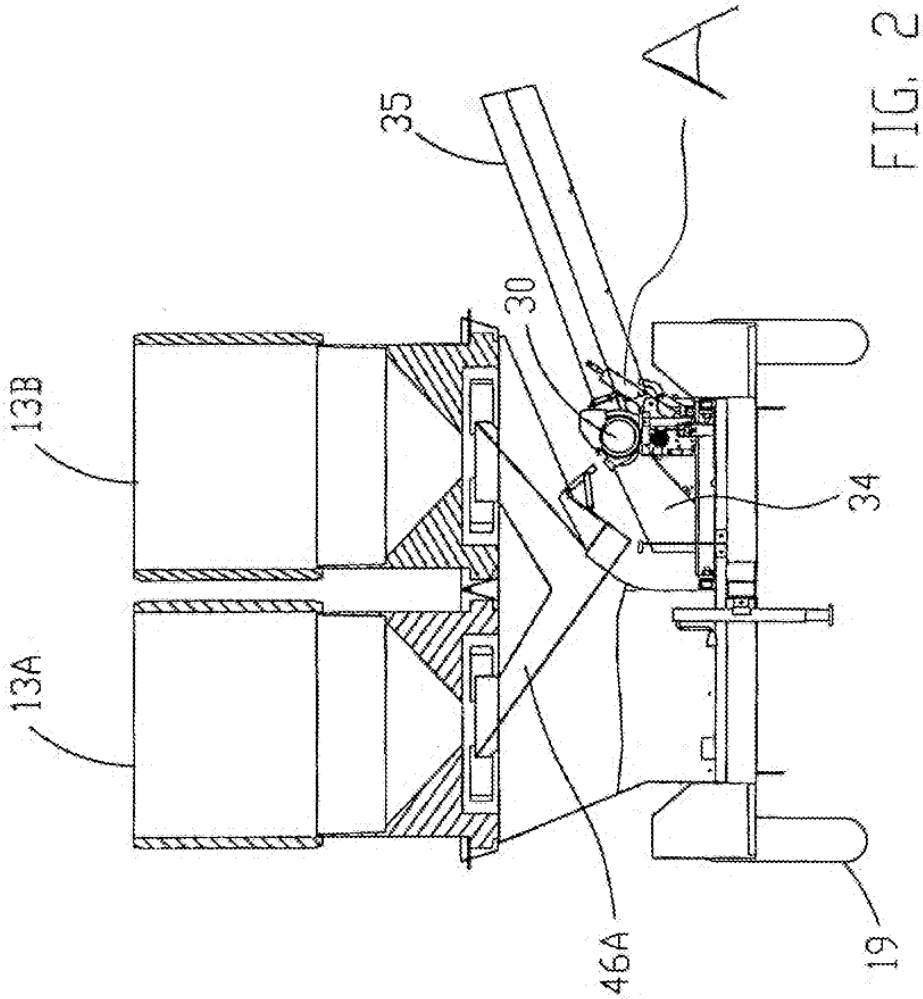

FIG. 2

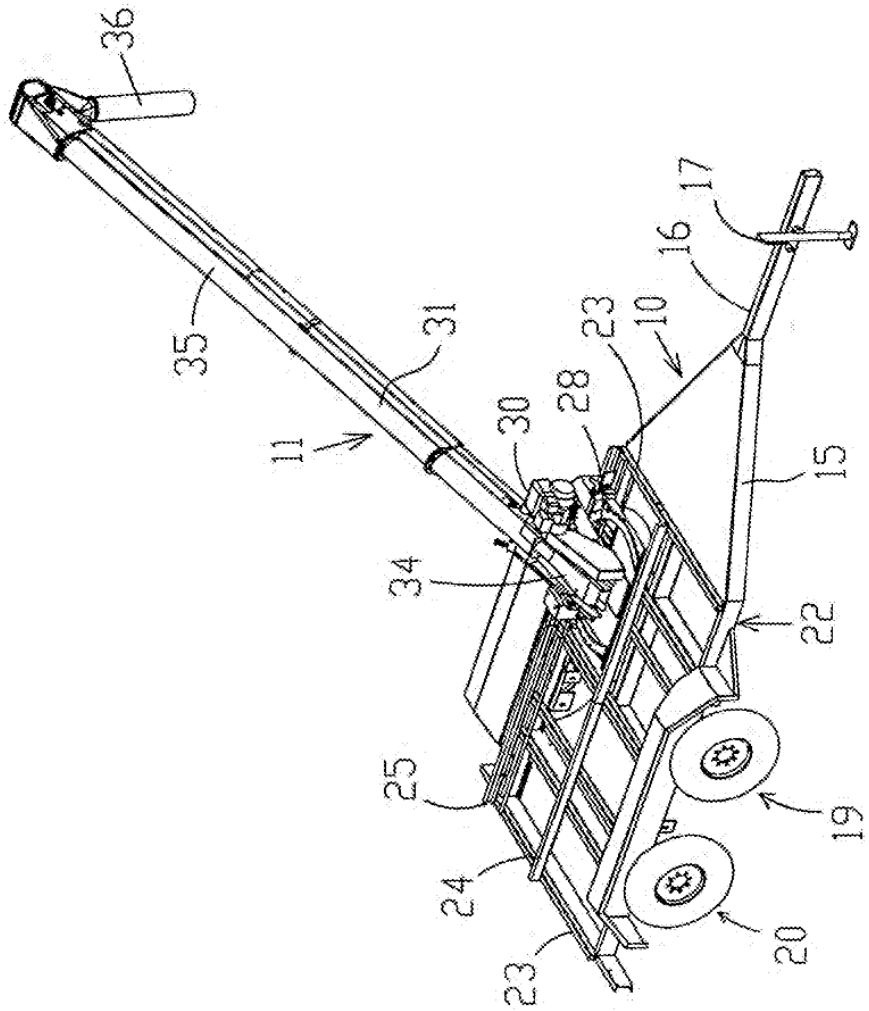

FIG. 3

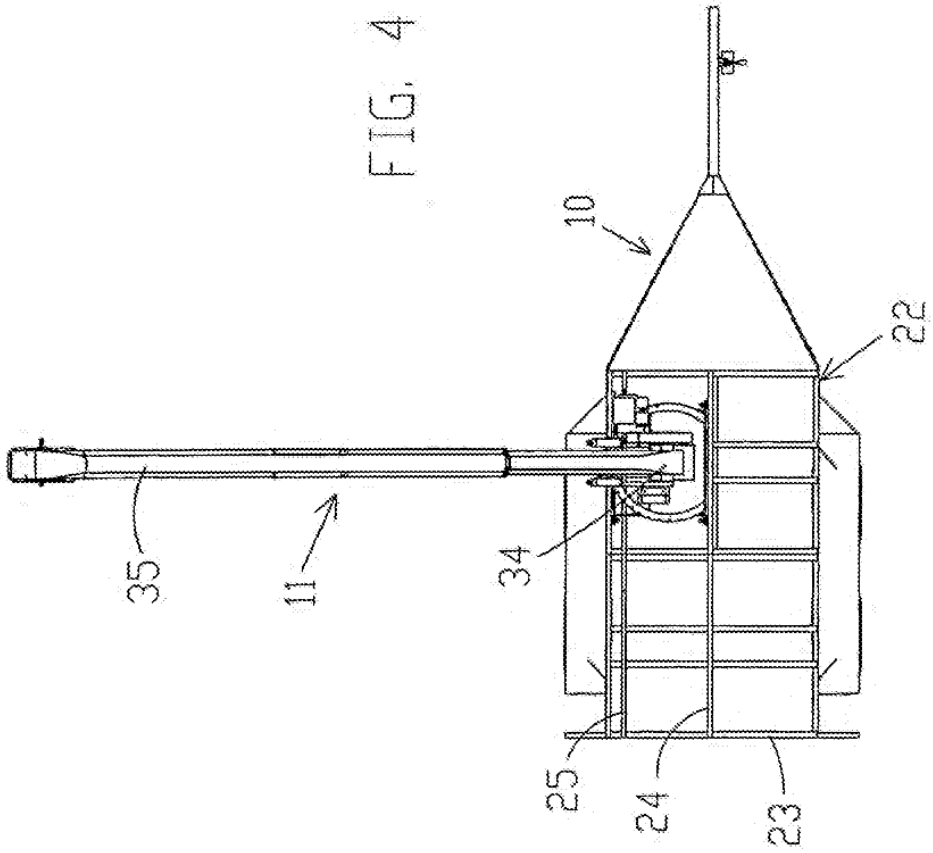

FIG. 4

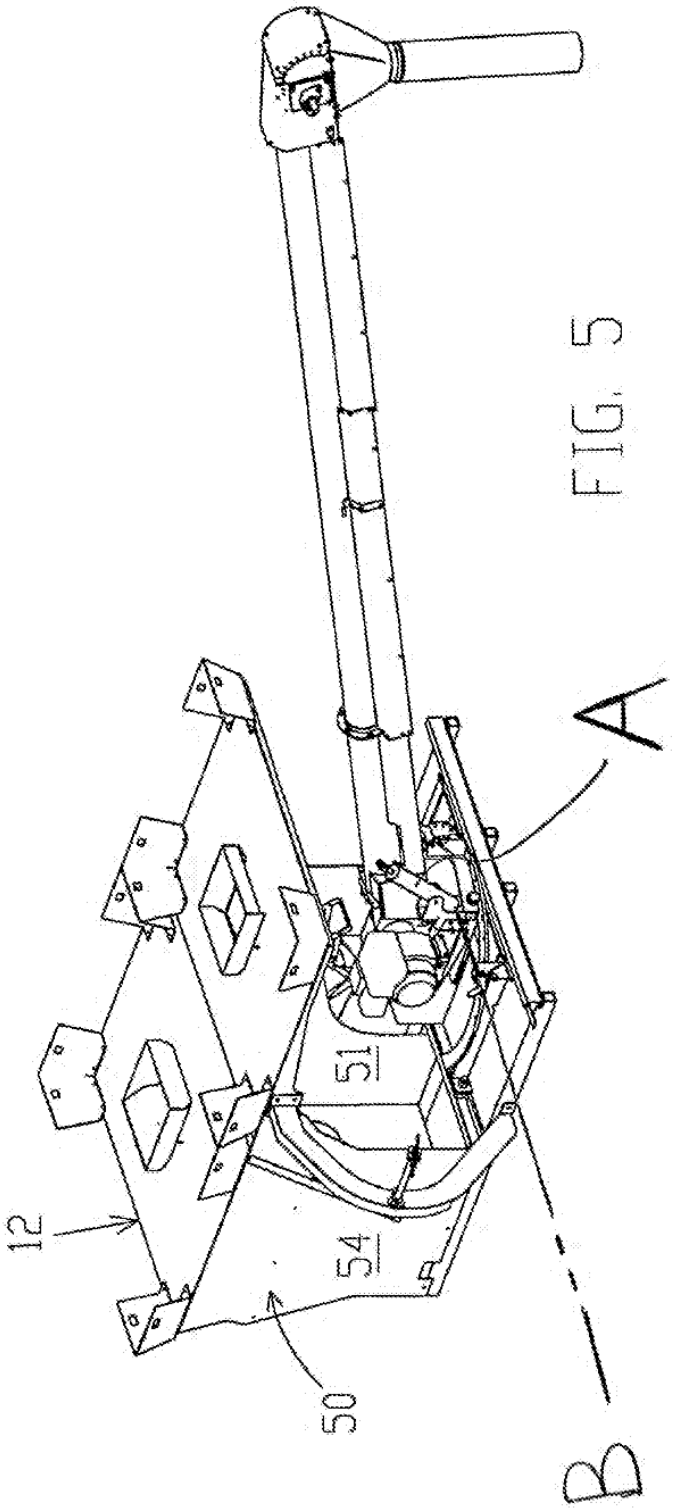

FIG. 5

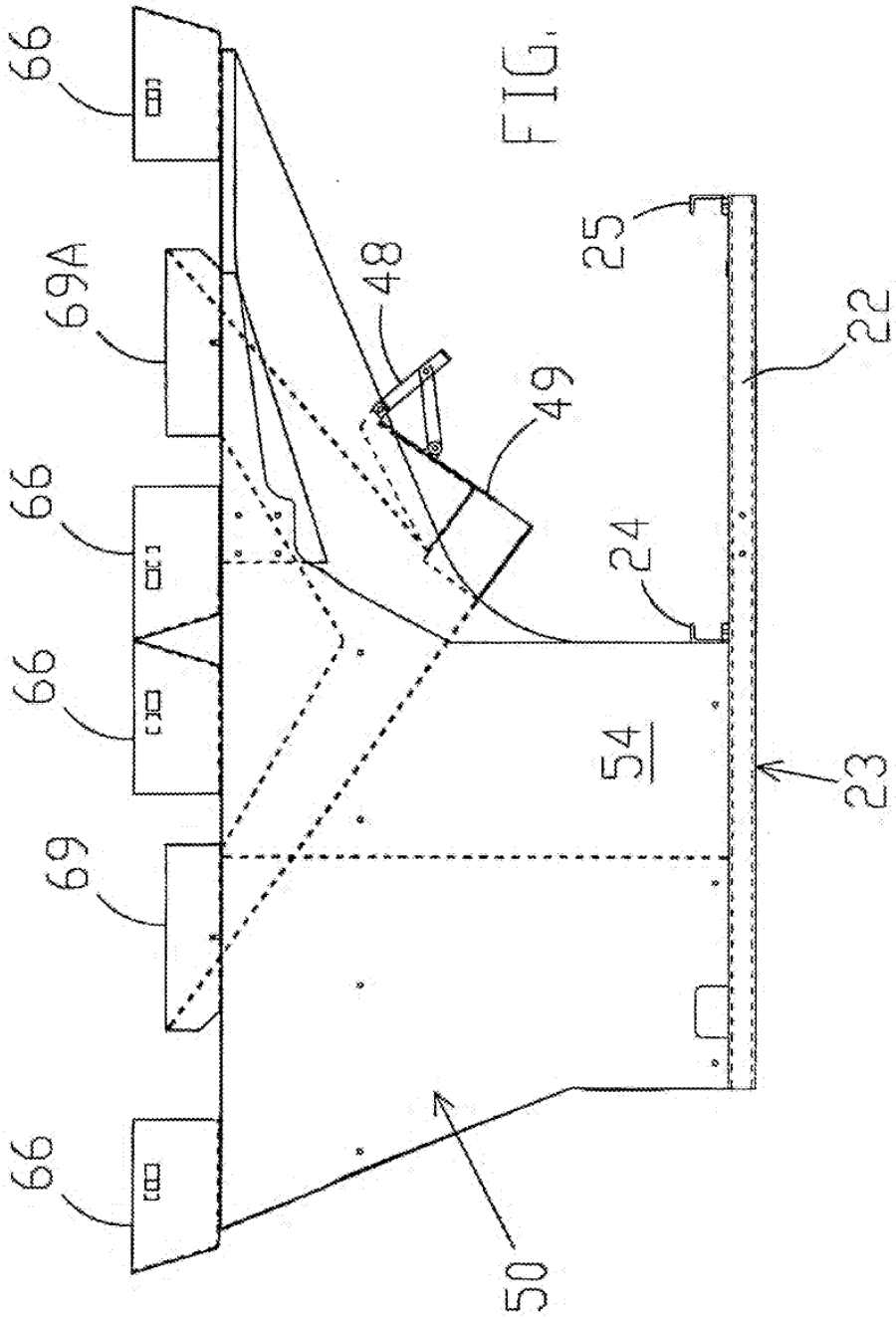

FIG. 6

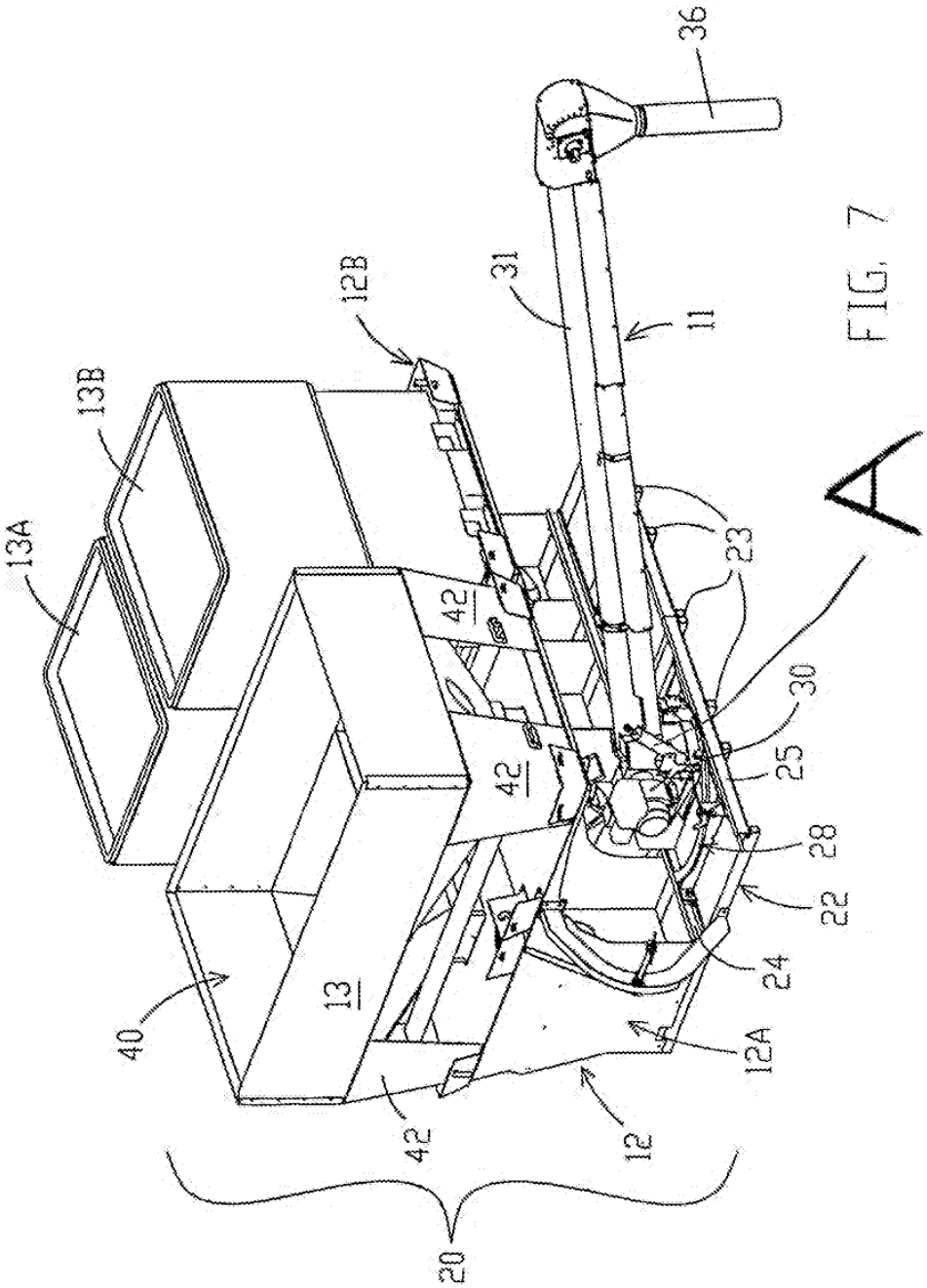

FIG. 7

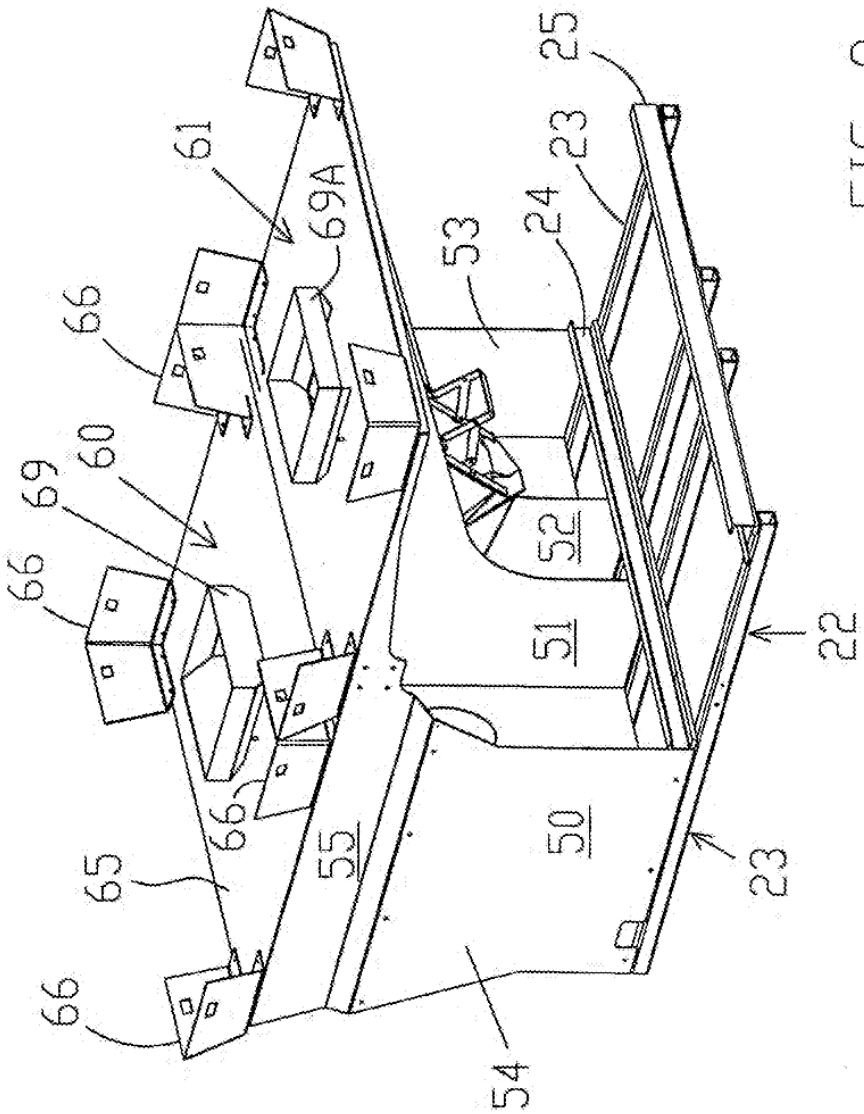

FIG. 8

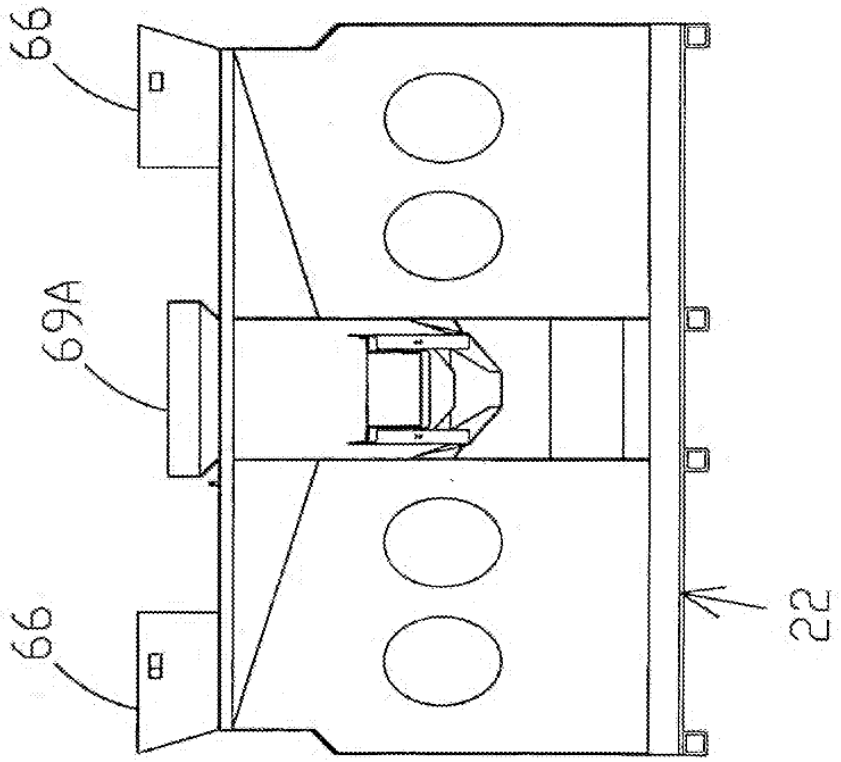

FIG. 9

AGRICULTURAL SEED TENDER WITH MODULAR STORAGE CONTAINERS

RELATED APPLICATION

This application claims benefit under 35 U.S.C. '120 of U.S. application Ser. No. 60/653,876, filed Feb. 16, 2005, for "BULK SEED TENDER".

FIELD OF THE INVENTION

The present invention relates to apparatus for handling agricultural seed in bulk form. In particular, it relates to a trailer or wheeled tender adapted to be pulled by a vehicle such as a truck, and containing seed in bulk form or stored in large, heavy containers, primarily for supplying agricultural row crop planters or grain drills or the like, with seed, although it may be used for other seed handling applications as well.

BACKGROUND OF THE INVENTION

The term "planters" as used herein, it is intended to include all types of planting machines, such as row crop planters, grain drills and any other seed planting devices. As planters become larger and larger, the seed storage hoppers or containers on modern planters have also become larger in capacity such that currently, a large agricultural planter is capable of storing seed in quantities which are of considerable weight, and there have been many attempts to mechanize the filling and refilling of planter hoppers or seed bins with seed. Mechanized filling of seed hoppers or bins saves considerable time during the planting season, when time is at a premium.

Most prior attempts to provide a seed supply tender for a planter have been limited to a single type of seed at a given time, or to a single type of seed container. Such attempts are limited in that a farmer may use the same planter to plant different varieties of seed in the same field. Bulk seed for popular commercial crops such as corn and soy beans is now distributed in large boxes, tanks or seed bags, depending upon the producer of the seed and the quantity and volume of seed being transferred. The weight of the containers requires powered lifts for handling.

It is thus desirable to have a seed tender which is not only portable and adaptable to the various situations found in different farms and areas, but which is capable of handling large volumes and considerable weight of seed, and which is also capable of carrying seed containers of different volumes and/or configurations, for maximum flexibility. Further, by accommodating a larger number of seed containers on the seed tender, a problem arises in mechanizing the distribution of seed from the various containers, particularly as they are located in different places on a tender, as well as having the vehicle accommodate containers of different configurations.

SUMMARY OF THE INVENTION

The present invention includes a trailer having support wheels and a frame adapted to be hitched to a truck. The trailer frame includes a guide/support track extending longitudinally of the trailer. As used herein, "longitudinal" refers to the direction of travel of the trailer. "Transverse" refers to the side-to-side direction relative to the direction of travel.

A conveyor is mounted to the track by a turret rotatable about a vertical axis. Preferably the turret is located to one side of the trailer, and the turret and conveyor move beneath the seed storage bins. This arrangement permits the turret to

move in a longitudinal direction so as to unload seed under gravity from containers located above the conveyor inlet and either in a forward or a rear position on the trailer. In this manner, the forward and rear seed containers need not be the same container size or configuration. For example, one could be a relatively large bin extending the full width of the trailer, whereas the others could be two smaller containers, located side-by-side, and having a combined width equal to the width of the larger container, depending upon the manner in which the distributor or seed manufacturer elects to ship and transport the seed.

Thus, the conveyor is capable of moving along the track to different unload positions in a longitudinal direction. The storage containers may be provided in a number of different sizes, types, and configurations so that they may be arranged and adapted for particular containers, which better suit the user's needs and convenience.

The turret and conveyor inlet hopper are positioned to move longitudinally along the track, to be positioned beneath a desired larger container or beside two containers located side-by-side, which may then be unloaded by the conveyor to fill a planter box or grain drill, or for other seed handling applications.

The conveyor may be turned by the turret about its vertical axis between: (i) a side position for unloading seed; (ii) a forward position and extending forwardly wherein the conveyor is located between the sides of the trailer and in front of it, for transport, or (iii) to the rear and extending rearwardly, for unloading or transport. In any longitudinal positioning of the conveyor, the conveyor delivery tube may be raised or lowered as desired. This feature is convenient as well as economical because some planters, particularly larger ones, have storage hoppers which typically have an inlet opening higher than the conventional seed hoppers of, smaller or intermediate size row crop planters, for example. Moreover, this arrangement (i.e., raising or lowering the elevation angle of the tubular conveyor) permits the conveyor to be raised in the storage position, but lowered during delivery or use applications.

The ability to raise and lower the unload auger also permits grain containers or bins carried on a trailer to be mounted at a lower elevation, thus, lowering the center of gravity of the trailer and providing greater stability in transport, as well as during unloading. Further, the ability to raise the unload auger during unloading permits unloading to be accomplished at greater heights than heretofore using conventional techniques, thus utilizing the full advantage of a cleated belt conveyor such as disclosed in U.S. Pat. No. 6,170,649, issued Jan. 9, 2001. Moreover: the use of a powered conveyor to fill the planter hopper or seed bin improves seed storage capacity, as well as the ability to place the conveyor and its mount on flatbed semi-trailers, or other trailers. Thus, the end user may already own one of these types of trailers and does not, therefore, have to purchase a new trailer or truck having a special height requirement. In other words, the present invention permits not only flexibility in positioning and elevating the unload auger, but also permits the user to mount the structure on a variety of vehicles, including trailers or trucks of different height.

Other features and advantages of the present invention will be apparent to persons skilled in the art from the following detailed description of a preferred embodiment, accompanied

by the attached drawing, wherein identical reference numerals will refer to like parts in the various views.

BRIEF DESCRIPTION OF THE DRAWINGS

FIG. 1 is a right, front perspective view of a seed tender incorporating the present invention; taken from a front, left, upper view;

FIG. 1A is a front elevational view of a seed tender incorporating the present invention;

FIG. 2 is a view similar to FIG. 1, but with two rear grain storage bins shown in cross section taken along a vertical transverse plane;

FIG. 3 is an upper, right perspective view of the trailer, the conveyor in the unload position, and the track system mounting the conveyor to the trailer frame;

FIG. 4 is a plan view of the trailer and conveyor, without the seed bins;

FIG. 5 is a perspective view without the trailer, of the storage and unload module, taken from a forward and upper left side, showing the unload conveyor and its mount, and one modular support structure for the overhead seed storage bin or bins;

FIG. 6 is a front elevational view of the seed bin support module of FIG. 5;

FIG. 7 is a perspective view similar to FIG. 5, but with two modular seed bin supports, located fore and aft of each other, and with different configurations of seed storage bins fore and aft;

FIG. 8 is a close-up perspective view of a seed bin support structure for mounting two seed bins side-by-side on the trailer, taken from a forward, left and slightly elevated perspective; and

FIG. 9 is a right side view of the seed bin storage module of FIG. 6.

DETAILED DESCRIPTION OF THE ILLUSTRATED EMBODIMENT

Referring first to FIGS. 1, 1A and 3, the seed tender of the present invention includes a wheeled trailer generally designated 9, an unload conveyor generally designated 11 and located toward the left side of the trailer in FIG. 1A (when looking in the direction of travel), one or more seed bin modules generally designated 12 (FIG. 1), and at least one seed storage bin 13. As used herein, "bin" is intended to be construed broadly to include all manner of container, regardless of size, shape, configuration or material (including even flexible bags). Broadly speaking, the invention includes a seed bin module 12 and a support vehicle. In the illustrated embodiment, the support vehicle is shown as a trailer simply because a trailer might be provided by a manufacturer of the entire system. However, the support vehicle could be a truck, as well, adapted for supporting and securing the seed bin module, because the seed bin module is self-contained and not dependent upon the type of vehicle which transports and positions it.

Still referring to FIGS. 1 and 3, the trailer 9 may be of conventional design, including a frame 15 fitted with a draft tongue 16 carrying, if desired, a support stand 17. Pairs of forward and rear wheels designated 19, 20 respectively in FIG. 3, support the frame 15 as well as the seed bin module 12, comprising an unload conveyor 11, bin support modules 12, which serve as mounts for individual storage bins 13, as well as the contents of the seed storage bins, while permitting the trailer and its load to be pulled by a vehicle or truck.

The versatility and utility of the present invention may best be understood from FIGS. 1 and 7, to which reference is now made. A superstructure comprising one or more bin support modules, seen in FIG. 7, is mounted to the conventional frame 15 of the trailer 9. The superstructure, generally designated 20, includes a lower frame 22 including a series of transverse metal bars, which may be rectangular tubes, welded or otherwise affixed to the trailer frame 9. This provides a stable base for assembling and mounting the bin support modules. In FIG. 7, there are two bin support modules designated respectively 12A for the forward bin support module and 12B for the rear bin support module. These bin support modules may be identical even though the bins they support have different capacities. It will be appreciated that the forward hopper or storage bin module 13 is mounted to the forward bin support 12A whereas there are two bin modules 13A and 13B mounted to the rear bin support module 12B (compare FIGS. 1 and 2, for example). Both rear bins 13A, 13B are mounted to the rear bin support 12B, which in turn is mounted to the superstructure carrying frame 22 which, in turn, is secured to the main frame 9 of the trailer (or truck).

A pair of metal rails 24, 25 (in the form of C-shaped channels as seen in FIG. 8) are welded to the transverse frame members 23 of the lower frame 22 to form a track for moving the conveyor along the length of the wheeled support vehicle. The conveyor 11 includes a turret mount 28 carried by a conventional mobile carrier, including a circular track, and seen best in FIG. 3, for traveling longitudinally along the track defined by the rails 24, 25. The unload conveyor 11 also includes a drive motor 30 which drives the belt of a conventional tube conveyor. For example, the tube, conveyor 11 may be of the type described in U.S. Pat. No. 6,675,958 issued Jan. 13, 2004 entitled ATube Conveyor. Although less desirable, the conveyor could be an auger. Briefly, the former preferred conveyor includes a tubular housing 31 in which the seed is moved by a cleated belt from an inlet hopper 34 (FIG. 3) through a conveyor tube 35 of closed cross section to a discharge tube 36. The turret mount 28, motor 30 and discharge tube 31 may be moved manually between a forward discharge position beneath the larger bin 13, as seen in FIG. 7, or rearwardly, along the rails 24, 25, to a rear discharge position beneath the rear bins 13A, 13B.

As best seen in FIG. 1, when the conveyor is in the forward position, it can be used either for transport or for unloading in a forward location. Alternatively, as seen in FIG. 7, the conveyor may be rotated to a wide range of angles, both vertical and horizontal, providing a flexible unload capability. See also FIG. 3. Finally, as will be appreciated, the turret can be moved to a rearward position, and the conveyor 11 may be rotated about a vertical axis to instill another wide range of unload, or rear-trailing positions. Thus, there is great flexibility and adaptability in the positioning of the conveyor, whether for unloading or for transport or storage.

Turning now to the bin support module 12 on which the forward storage bin 13 is mounted, with particular reference to FIGS. 1A and 7, it may be fabricated using conventional techniques from sheet metal. In the illustrated embodiment, the storage bin 13 includes a rectangular upper body hopper portion 40 (FIG. 7) having four upright walls arranged in a rectangular form, and four supporting legs 42, one located in each corner, also formed of sheet metal and bent into an angular form corresponding to the shape of the corners of the corresponding walls providing the upper hopper. In FIG. 7, the support legs are designated 42, and each may be of similar shape and structure.

At the bottom of the upper hopper wall 40, there are formed left and right funnel-shaped discharge areas 44, the bottom of

which are open and rectangular, and lead into aligned, rectangular openings (69, 69A in FIG. 8) in a V-shaped conduit 46 having two upper conduit leg portions which converge at the bottom designated 47 in FIG. 1A. A manually operable gate 48 (FIGS. 6 and 8) is hinged above an outlet opening 49 of a discharge spout extending from the bottom 47 of the conduits 46 for controlling the flow of the seed under gravity into the inlet hopper 34 of the unload conveyor 11. Alternatively, the gate 48 may be operated electrically or hydraulically, if desired.

Turning now to FIGS. 5, 6 and 8-10, the bin support module 12 will now be described in detail. As mentioned, however, each bin support module may be the same as the other, so that only one need be described in detail for a full understanding of the invention. Making the bin support modules identical not only reduces the cost of the tender vehicle, but it also enhances its utility because it permits the type of modularity and various arrangements of different size seed bins as shown in FIGS. 1 and 7, and described above.

Turning then to the bin support module 12, it includes a forward wall 50, two intermediate walls 51, 52 and a rear wall 53. Each of the walls 50-53 may be similar in shape, which, as illustrated in FIG. 5, 6 and 8 for the forward wall 50 includes a lower section 54 having a width extending from the right side of the lower transverse superstructure frame 22 (i.e. the left side of FIG. 6) toward the center and immediately adjacent the inboard rail 24. The support wall 50 (and others as well) then extend upwardly and outwardly to brace and support the seed bins. Thus, the upright transverse support walls form openings which are aligned in the direction of travel to provide openings forming a passage or thruway above the rails or tracks 24, 25 to allow the conveyor to move between a forward position (FIG. 1) to a corresponding rear position as can be appreciated from FIGS. 1 and 6, and be located at any intermediate position as well. This leaves the track formed by the rails 24, 25 free for moving the conveyor assembly fore and aft. Above the lower portion 54 of the wall 50, there is an upper portion 55 which extends from the right side of the lower frame 22 over to the left side of the lower frame 22, and above the left rail 25. As seen in FIG. 8, the individual frame members 23 of the lower frame 22 extend from the right side to the left side of the bin support module 12. The lower edges of the walls 50-53 are secured, as by welding, to the right side of the individual frame members 23 of the transverse frame 22 (that is, toward the right side of the inner rail 24).

The upper section 55 of the wall 50 (as well as for the other support walls 51-53) extend toward the left (toward the right as FIG. 8 is viewed), to provide a throway above the track for the passage of the inlet hopper, and base of the conveyor, including the drive motor and turret mount, as best seen in FIGS. 8 and 9. The cantilever upper portions such as that designated 55 in FIG. 8 of the walls 50-53 support the outboard, left side of the seed being stored and transported in the bins on the left side, as will be understood.

Above, and resting on the upper portions of the upright walls 50-53, for each bin support module are right and left base plates or mounting plates, designated respectively 60, 61 in FIG. 8, denoting the right and left base support plates respectively. Each of the base support plates is, in turn, fabricated from sheet metal, and to enhance the modularity of the system, each of the base support plates may be identical. Moreover, the same two base support plates may be used to support a single, larger storage bin such as that designated 13 in the front of the unit in FIG. 7, and the same structure, including two identical base support plates may be used to support the two separate seed storage bins 13A, 13B. Thus, only one base support plate need be described for further understanding 15 of the invention.

Turning then to FIG. 8, each base support plate includes a flat metal plate 65 including corner braces secured at each of the corners, and designated 66, for each corner brace. Depending on the desired configuration, the corner braces may have to be modified slightly. At the center of the plate 65 there is an aperture with a raised rectangular collar designated 69 which receives a shortened downspout from an associated discharge opening of a seed storage bin. The corresponding collar for the left side support brace 61 is designated 69A. As seen in FIG. 1, the two guide collars 69, 69A, are coupled respectively to the upper, input ends of the conduit sections 46 of the V-shaped conduit 47, leading to the input of the conveyor hopper 34.

Turning now to FIG. 2, briefly, it can be seen that each of the two rear storage bins 13A, 13B (seen in vertical cross section) may use the same routing conduit system for handling the seeds in those two bins when the conveyor is moved to the rear station beneath the two rear bins.

As has been mentioned, although two discharge stations are shown in the embodiment of FIG. 7, the invention, particularly due to its modularity, may have three, four or more discharge stations with different combinations of bin styles and shapes and capacities if desired.

It will thus be appreciated that the elevation of the unload conveyor 11 may be adjusted continuously over a wide range of unload heights, so that the system accommodates a number of different applications, from loading grain drills to loading individual hoppers for row crop planters to loading larger central seed storage hoppers on a planter or seed drill which have a higher reach, and can be moved from a forward position, to any side position to a rear position, providing over 180° of lateral flexibility, as well as the vertical adjustment flexibility described.

Having thus disclosed in detail, an illustrated embodiment of the invention, persons skilled in the art will be able to modify certain of the structure which has been illustrated, and to modify certain of the structure which has been disclosed; and it is, therefore, intended that all such modifications and substitutions be covered as they are embraced within the spirit and scope of the appended claims.

We claim:

1. A seed tender comprising:

a wheeled support vehicle;

a first support module mounted on said vehicle and defining an elongated first thruway, said first thruway opening to at least one side of said support vehicle;

a second support module mounted on said vehicle and defining a second elongated thruway extending longitudinally of said second support module, said first and second thruways forming an opening to a lateral side of said support vehicle and partially through a front side and a rear side of said support vehicle, whereby said conveyor may be positioned to extend in front of said support vehicle, to rear of said support vehicle, or adjusted along a lateral side of said support vehicle; and

a second seed container mounted to said second seed support module;

at least one seed container mounted to said first support module for storing seed;

a track mounted to said support vehicle and extending longitudinally of said first thruway;

a powered conveyor having an input section adapted to receive seed from said seed container for delivering said seed through a discharge end to an outlet;

a turret mounting said conveyor on said track for positioning said conveyor longitudinally of said track and for rotating said conveyor laterally for side adjustment and for adjusting said conveyor vertically for height adjustment of a discharge end.

2. The tender of claim 1 wherein one of said support modules is adapted to support first and second seed containers in side-by-side relation; and wherein

first and second seed containers are mounted to said first support module.

3. The tender of claim 1 wherein said support vehicle has a width, and one of said support modules is adapted to support one seed container having a generally rectangular upper inlet and extending laterally substantially the width of said support vehicle.

4. The tender of claim 3 wherein a second of said support modules is adapted to support two seed containers and further including

first and second seed containers mounted respectively on said first and second support modules, each container having a generally rectangular upper inlet and together extending laterally substantially the width of said one support module.

5. The tender of claim 4 wherein said first support module includes a lower discharge chute of a contentiously decreasing cross sectional area to funnel the seed contained therein through a discharge opening to an inlet of said conveyor; and further including

a door pivotally mounted to close said discharge opening and moveable to an open position to permit seed to flow from a container to an inlet of said conveyor.

6. The tender of claim 1 wherein said first and second support modules each include first and second apertures for passing seed vertically from a seed container, and further comprising:

a conduit for receiving seed from said first and second apertures and delivering seed to said conveyor; and

a gate mounted to selectively open and close said conduit for controlling the delivery of seed from said container.

7. The tender of claim 6 wherein said gate is manually controlled.

8. A support module for a seed container and adapted to be mounted to a frame of a vehicle, said module comprising:

at least first and second upright walls extending generally parallel to one another in a forward and a rear position, said first and second walls defining a thruway extending front to rear of said module and opening laterally to one side thereof;

a track extending longitudinally of said thruway;

a horizontal base support wall interconnecting said first and second upright walls and defining first and second laterally spaced discharge openings;

a plurality of connector members for receiving a seed container and removable mounting said seed container to said support vehicle;

a conduit for passing grain from said first and second discharge openings of a seed container to a conveyor carried on said track; and

a gate for controlling the flow of seed from said container to a conveyor on said track.

9. The module of claim 8 further comprising a module frame secured to a bottom of said upright walls; and

wherein said track includes first and second rails mounted to said module frame.

* * * * *

UNITED STATES PATENT AND TRADEMARK OFFICE

CERTIFICATE OF CORRECTION

PATENT NO. : 7,500,817 B2
APPLICATION NO. : 11/348659
DATED : March 10, 2009
INVENTOR(S) : G. Jason Furrer et al.

It is certified that error appears in the above-identified patent and that said Letters Patent is hereby corrected as shown below:

Column 6, line 2, "understanding 15 of the invention" should read --understanding of the invention--

Signed and Sealed this

Second Day of June, 2009

John Doll

JOHN DOLL
Acting Director of the United States Patent and Trademark Office