High-Definition Multimedia Interface

Specification Version 1.0

Hitachi, Ltd.

Matsushita Electric Industrial Co., Ltd.

Philips Consumer Electronics, International B.V.

Silicon Image, Inc.

Sony Corporation

Thomson Inc.

Toshiba Corporation

CONFIDENTIAL

December 9, 2002

Preface

Notice

THIS SPECIFICATION IS PROVIDED “AS IS” WITH NO WARRANTIES WHATSOEVER, EXPRESS OR IMPLIED, INCLUDING, WITHOUT LIMITATION, NO WARRANTIES OF MERCHANTABILITY, NONINFRINGEMENT, FITNESS FOR ANY PARTICULAR PURPOSE, OR ANY WARRANTY OTHERWISE ARISING OUT OF ANY PROPOSAL, SPECIFICATION, OR SAMPLE.

Hitachi, Ltd., Matsushita Electric Industrial Co., Ltd., Philips Consumer Electronics International B.V., Silicon Image, Inc., Sony Corporation, Thomson Inc., Toshiba Corporation and HDMI Licensing, LLC. disclaim all liability, including liability for infringement of any proprietary rights, relating to use of information in this specification.

Copyright © 2001-2002 by Hitachi, Ltd., Matsushita Electric Industrial Co., Ltd., Philips Consumer Electronics International, B.V., Silicon Image, Inc., Sony Corporation, Thomson Inc., and Toshiba Corporation. All rights reserved. No license, express or implied, by estoppel or otherwise, to any intellectual property rights is granted herein. Unauthorized use or duplication prohibited. “HDMI” and all associated logos are trademarks of HDMI Licensing, LLC. Third-party trademarks and servicemarks are property of their respective owners.

Document Revision History

1.0	2002/12/09	Initial Release

IPR2024-001429
HP – EX1010, Page 2 of 193

Intellectual Property Statement

Hitachi, Ltd., Matsushita Electric Industrial Co., Ltd., Philips Consumer Electronics International, B.V., Silicon Image, Inc., Sony Corporation, Thomson Inc., and Toshiba Corporation each may have patents and/or patent applications related to the High-Definition Multimedia Interface Specification. These companies intend to make available to the industry an Adopter Agreement that will include a limited, reciprocal patent license to certain of the electrical interfaces, mechanical interfaces, signals, signaling and coding protocols, and bus protocols described in the mandatory portions of the High-Definition Multimedia Interface Specification Release 1.0 published by HDMI Licensing, LLC.

Contact Information

The URL for the HDMI Founders web site is: http://www.HDMI.org.

Contribution

Silicon Image, Inc has made a significant contribution to this standard by editing the specification and developing the core technologies upon which this specification is based; including Transition Minimized Differential Signaling (TMDS®) technology.

Acknowledgement

HDMI founders acknowledge the concerted efforts of employees of Japan Aviation Electronics Industry, Limited and Molex Japan, who have made a significant contribution to this standard by developing the connector technology and the mechanical and electrical specifications for the required plugs and receptacles.

IPR2024-001429
HP – EX1010, Page 3 of 193

Table of Contents

PREFACE ..... **II**

NOTICE II

DOCUMENT REVISION HISTORY II

INTELLECTUAL PROPERTY STATEMENT III

CONTACT INFORMATION III

CONTRIBUTION III

ACKNOWLEDGEMENT III

1 INTRODUCTION **1**

1.1 PURPOSE AND SCOPE 1

1.2 NORMATIVE REFERENCES 1

1.3 INFORMATIVE REFERENCES 2

1.4 ORGANIZATION OF THIS DOCUMENT 2

1.5 USAGES AND CONVENTIONS 3

2 DEFINITIONS **4**

2.1 CONFORMANCE LEVELS 4

2.2 GLOSSARY OF TERMS 4

2.3 ACRONYMS AND ABBREVIATIONS 6

3 OVERVIEW **8**

4 PHYSICAL LAYER **10**

4.1 CONNECTORS AND CABLES 10

4.1.1 Overview of Connectors 10

4.1.2 Connector Support Requirements 10

4.1.3 Dual-Link 10

4.1.4 Connector Pin Assignments 11

4.1.5 Contact sequence 12

4.1.6 Connector Mechanical Performance 13

4.1.7 Connector Electrical Characteristics 15

IPR2024-001429
HP – EX1010, Page 4 of 193

4.1.8 Connector Environmental Characteristics *17*
4.1.9 Connector Drawings *19*
4.1.10 Cable Adapter Specification *25*
4.2 ELECTRICAL SPECIFICATION 29
4.2.1 Overview *29*
4.2.2 System Operating Conditions *30*
4.2.3 Jitter and Eye Measurements: Ideal Recovery Clock *30*
4.2.4 HDMI Source TMDS Characteristics *31*
4.2.5 HDMI Sink TMDS Characteristics *34*
4.2.6 Cable Assembly *36*
4.2.7 +5V Power Signal *37*
4.2.8 DDC *38*
4.2.9 Hot Plug Detect Signal (HPD) *38*
4.2.10 CEC Line *39*
4.2.11 Robustness Requirements *39*
5 SIGNALING AND ENCODING 40
5.1 OVERVIEW 40
5.1.1 Link Architecture *40*
5.1.2 Operating Modes Overview *41*
5.2 OPERATING MODES 42
5.2.1 Control Period *42*
5.2.2 Video Data Period *44*
5.2.3 Data Island Period *44*
5.3 DATA ISLAND PACKET DEFINITIONS 48
5.3.1 Packet Header *48*
5.3.2 Null Packet *49*
5.3.3 Audio Clock Regeneration Packet *49*
5.3.4 Audio Sample Packet *50*
5.3.5 InfoFrame Packet *51*
5.3.6 General Control Packet *52*
5.4 ENCODING 53
5.4.1 Serialization *53*
5.4.2 Control Period Coding *54*

IPR2024-001429
HP – EX1010, Page 5 of 193

5.4.3 TERC4 Coding *54*
5.4.4 Video Data Coding *55*

6 VIDEO 59

6.1 OVERVIEW 59
6.2 VIDEO FORMAT SUPPORT 59
6.2.1 Format Support Requirements *59*
6.2.2 Video Control Signals : HSYNC, VSYNC *60*
6.2.3 Pixel Encoding Requirements *60*
6.3 VIDEO FORMAT TIMING SPECIFICATIONS 60
6.3.1 Primary Video Format Timings *61*
6.3.2 Optional Video Format Timings *61*
6.4 PIXEL-REPETITION 61
6.5 PIXEL ENCODINGS 62
6.6 VIDEO QUANTIZATION RANGES 64
6.7 COLORIMETRY 65
6.7.1 480p, 480i, 576p, 576i, 240p and 288p *65*
6.7.2 1080i, 1080p and 720p *65*

7 AUDIO 66

7.1 RELATIONSHIP WITH IEC 60958/IEC 61937 (IEC) 66
7.2 AUDIO SAMPLE CLOCK CAPTURE AND REGENERATION 66
7.2.1 N parameter *67*
7.2.2 CTS parameter *68*
7.2.3 Recommended N and Expected CTS Values *68*
7.3 AUDIO SAMPLE RATES AND SUPPORT REQUIREMENTS 70
7.3.1 Video Dependency *71*
7.4 CHANNEL / SPEAKER ASSIGNMENT 73
7.5 AUDIO, VIDEO SYNCHRONIZATION 73
7.6 AUDIO DATA PACKETIZATION 73
7.7 ERROR HANDLING (INFORMATIVE) 75
7.8 PACKET DELIVERY RULES 76
7.8.1 Audio Sample Packets *76*
7.8.2 Audio Clock Regeneration Packets *76*

IPR2024-001429
HP – EX1010, Page 6 of 193

8 CONTROL AND CONFIGURATION 77

8.1 OVERVIEW 77

8.2 EIA/CEA-861B INFOFRAMES 77

8.2.1 Auxiliary Video information (AVI) InfoFrame 77

8.2.2 Audio InfoFrame 80

8.3 E-EDID DATA STRUCTURE 82

8.3.1 EDID Timing Extension 82

8.3.2 HDMI Vendor-Specific Data Block (HDMI VSDB) 82

8.3.3 DVI/HDMI Device Discrimination 83

8.3.4 Audio and Video Details 83

8.4 ENHANCED DDC 83

8.4.1 Timing 83

8.4.2 Data Transfer Protocols 84

8.4.3 Segment pointer 84

8.4.4 Enhanced DDC Sink 84

8.4.5 Enhanced DDC Source 84

8.5 HOT PLUG DETECT SIGNAL 85

8.6 CONSUMER ELECTRONICS CONTROL (CEC) 85

8.7 PHYSICAL ADDRESS 85

8.7.1 Overview 85

8.7.2 Physical Address Discovery 86

8.7.3 Discovery Algorithm 87

8.7.4 HDMI Sink Query 87

9 CONTENT PROTECTION 88

9.1 RECOMMENDATION 88

9.2 HDCP IMPLEMENTATIONS 88

APPENDIX A REPEATER 89

A.1 REPEATER FUNCTIONS 89

APPENDIX B TYPE B CONNECTOR USAGE 90

B.1 EXCEPTION TO AUDIO FORMAT SUPPORT REQUIREMENT 90

B.2 HDMI DUAL-LINK ARCHITECTURE 90

IPR2024-001429
HP – EX1010, Page 7 of 193

APPENDIX C COMPATIBILITY WITH DVI 91

C.1 REQUIREMENT FOR DVI COMPATIBILITY 91
C.2 HDMI SOURCE REQUIREMENTS 91
C.3 HDMI SINK REQUIREMENTS 92
C.4 TYPE A TO DVI ADAPTER CABLE [INFORMATIVE] 92
C.5 TYPE B TO DVI ADAPTER CABLE [INFORMATIVE] 94

SUPPLEMENT 1 CONSUMER ELECTRONICS CONTROL (CEC) ..... CEC-i

IPR2024-001429
HP – EX1010, Page 8 of 193

Figures

Figure 3-1 HDMI Block Diagram 8
Figure 4-1 Type A Receptacle Mating Interface Dimensions 19
Figure 4-2 Type A Plug Mating Interface Dimensions 20
Figure 4-3 Type A Receptacle and Plug Mated Condition 21
Figure 4-4 Type B Receptacle Mating Interface Dimensions 22
Figure 4-5 Type B Plug Mating Interface Dimensions 24
Figure 4-6 Type B Receptacle and Plug Mated Condition 24
Figure 4-7 Conceptual Schematic for one TMDS differential pair 29
Figure 4-8 Single-ended Differential Signal 29
Figure 4-9 Differential Signal 30
Figure 4-10 TMDS Link Test Points 30
Figure 4-11 Balanced Source Test Load 31
Figure 4-12 Normalized Eye Diagram Mask at TP1 for Source Requirements 33
Figure 4-13 HDMI Sink Test Points 34
Figure 4-14 Absolute Eye Diagram Mask at TP2 for Sink Requirements 35
Figure 4-15 Cable Assembly Test Points 36
Figure 5-1 HDMI Encoder/Decoder Overview 40
Figure 5-2 Informative Example: TMDS periods in 720x480p video frame 41
Figure 5-3 TMDS Periods and Encoding 45
Figure 5-4 Data Island Packet and ECC Structure 47
Figure 5-5 Error Correction Code generator 48
Figure 5-6 TMDS Video Data Encode Algorithm 57
Figure 5-7 TMDS Video Decode Algorithm 58
Figure 6-1 Default pixel encoding: RGB 4:4:4, 8 bits/component 62
Figure 6-2 YC_BC_R 4:2:2 component 62
Figure 6-3 8-bit YC_BC_R 4:4:4 mapping 63
Figure 6-4 RGB with Pixel-Doubling 63
Figure 6-5 YC_BC_R 4:2:2 with Pixel-Doubling 64
Figure 6-6 YC_BC_R 4:4:4 with Pixel-Doubling 64
Figure 7-1 Audio Clock Regeneration model 67
Figure 7-2 Optional Implementation: Audio Sink 67

IPR2024-001429
HP – EX1010, Page 9 of 193

Figure 7-3 Example Audio Sample Timing (Informative) 75
Figure 8-1 CEC and DDC line connections 85
Figure 8-2 Typical HDMI cluster 86
Figure 8-3 Addresses within an HMDI cluster 86

IPR2024-001429
HP – EX1010, Page 10 of 193

Tables

Table 4-1 Type A Connector Pin Assignment 11
Table 4-2 Type B Connector Pin Assignment 12
Table 4-3 Connector Contact Sequence 12
Table 4-4 Type A Plug and Receptacle Mechanical Performance 13
Table 4-5 Electrical Performance 15
Table 4-6 Connector Environmental Performance 17
Table 4-7 Wire Categories 25
Table 4-8 Type A-to-Type A Cable Wire Assignment 26
Table 4-9 Type A-to-Type B Cable Wire Assignment 27
Table 4-10 Type B to Type B Cable Wire Assignment 28
Table 4-11 Required Operating Conditions for HDMI Interface (see Figure 4-7) 30
Table 4-12 Source DC Characteristics at TP1 32
Table 4-13 Source AC Characteristics at TP1 32
Table 4-14 Sink Operating DC Characteristics at TP2 34
Table 4-15 Sink DC Characteristics When Source Disabled or Disconnected at TP2 34
Table 4-16 Sink AC Characteristics at TP2 35
Table 4-17 HDMI Sink Impedance Characteristics at TP2 35
Table 4-18 Cable Assembly Parameters 37
Table 4-19 Power Pin Voltage 37
Table 4-20 Maximum Capacitance of DDC line 38
Table 4-21 Pull-up Resistance on DDC Lines 38
Table 4-22 Required Output Characteristics of Hot Plug Detect Signal 38
Table 4-23 Required Detection Levels for Hot Plug Detect Signal 39
Table 4-24 CEC line Electrical Specifications for all Configurations 39
Table 5-1 Encoding Type and Data Transmitted 42
Table 5-2 Preambles for Each Data Period Type 43
Table 5-3 TMDS Link Timing Parameters 44
Table 5-4 Extended Control Period Parameters 44
Table 5-5 Video Leading Guard Band Values 44
Table 5-6 Data Island Leading and Trailing Guard Band Values 46
Table 5-7 Packet Header 48

IPR2024-001429
HP – EX1010, Page 11 of 193

Table 5-8 Packet Types ... 49
Table 5-9 Null Packet Header ... 49
Table 5-10 Audio Clock Regeneration Packet Header ... 49
Table 5-11 Audio Clock Regeneration Subpacket ... 50
Table 5-12 Audio Sample Packet Header ... 50
Table 5-13 Audio Sample Subpacket ... 51
Table 5-14 InfoFrame Packet Header ... 52
Table 5-15 InfoFrame Packet Contents ... 52
Table 5-16 General Control Packet Header ... 53
Table 5-17 General Control Subpacket ... 53
Table 5-18 Control-signal Assignment ... 54
Table 5-19 Encoding Algorithm Definitions ... 56
Table 6-1 Video Color Component Ranges ... 65
Table 7-1 Recommended N and Expected CTS for 32kHz Audio ... 68
Table 7-2 Recommended N and Expected CTS for 44.1kHz and Multiples ... 69
Table 7-3 Recommended N and Expected CTS for 48kHz and Multiples ... 69
Table 7-4 Channel Status Values for Audio Sample Frequencies ... 71
Table 7-5 Maximum Audio Sampling Frequency for all Video Format Timings (Informative) ... 72
Table 7-6 Audio Packet Layout and Layout Value ... 73
Table 7-7 Valid Sample_Present Bit Configurations for Layout 0 ... 74
Table 8-1 AVI InfoFrame Packet Header ... 77
Table 8-2 AVI InfoFrame Packet Contents ... 78
Table 8-3 HDMI Valid Pixel Repeat Values for Each Format ... 79
Table 8-4 Audio InfoFrame Packet Header ... 80
Table 8-5 Audio InfoFrame Packet contents ... 81
Table 8-6 HDMI-LLC Vendor-Specific Data Block (HDMI VSDB) ... 83
Table E-1 Wire Categories ... 92
Table E-2 Type A-to-DVI-D Cable Wire Assignment [Informative] ... 93
Table E-3 Type B to DVI-D Cable Wire Assignment [Informative] ... 94

IPR2024-001429
HP – EX1010, Page 12 of 193

1 Introduction

1.1 Purpose and Scope

This document constitutes the specification for the High-Definition Multimedia Interface (HDMI).

The High-Definition Multimedia Interface is provided for transmitting digital television audiovisual signals from DVD players, set-top boxes and other audiovisual sources to television sets, projectors and other video displays.

HDMI can carry high quality multi-channel audio data and can carry all standard and high-definition consumer electronics video formats. Content protection technology is available.

HDMI can also carry control and status information in both directions.

This specification completely describes the interface such that one could implement a complete transmission and interconnect solution or any portion of the interface. The underlying Transition Minimized Differential Signaling (TMDS)-based protocol and associated electrical signaling is described in detail. The mechanical specification of the connector and the signal placement within the connector are described.

A device that is compliant with this specification is interoperable with other compliant devices through the configuration and implementation provided for in this specification.

Mechanical, electrical, behavioral and protocol requirements necessary for compliance are described for sources, sinks and cables.

1.2 Normative References

The following standards contain provisions that, through reference in this text, constitute normative provisions of this standard. At the time of publication, the editions indicated were valid. All standards are subject to revision, and parties to agreements based on this standard are encouraged to investigate the possibility of applying the most recent editions of the standards listed below. If the referenced standard is dated, the reader is advised to use the version specified.

EIA, EIA/CEA-861B, “A DTV Profile For Uncompressed High Speed Digital Interfaces”[1]

VESA, VESA E-EDID Standard, ENHANCED EXTENDED DISPLAY IDENTIFICATION DATA STANDARD Release A, Revision 1, February 9, 2000

VESA, VESA E-DDC Standard, ENHANCED DISPLAY DATA CHANNEL STANDARD Version 1, September 2, 1999

Philips Semiconductors, The I^2C-bus Specification, Version 2.1, January 2000

ITU, ITU-R BT.601-5 Studio encoding parameters of digital television for standard 4:3 and wide-screen 16:9 aspect ratios (October 1995)

[1] All HDMI devices are required to comply with the requirements specified in EIA/CEA-861B except where specifically noted in this document.

IPR2024-001429
HP – EX1010, Page 13 of 193

ITU, ITU-R BT.709-4 Parameter values for the HDTV standards for production and international programme exchange (March 2000)

IEC, IEC 60958-1, “Digital audio interface – Part 1: General”, First edition 1999-12

IEC, IEC 60958-3, “Digital audio interface – Part 3: Consumer applications”, First edition 1999-12

IEC, IEC 61937, “Digital Audio - Interface for non-linear PCM encoded audio bitstreams applying IEC 60958”, First edition 2000-04

DDWG, “Digital Visual Interface,” Revision 1.0, April 2, 1999 (DVI)

1.3 Informative References

The following documents contain information that is useful in understanding this standard. Some of these documents are drafts of standards that may become normative references in a future release of this standard.

Digital Content Protection LLC, “High-bandwidth Digital Content Protection System Specification”, Revision 1.10 (HDCP)

ANSI/SMPTE, SMPTE Standard 170M (1999) for Television – Composite Analog Video Signal – NTSC for Studio Applications

ANSI/SMPTE, SMPTE Standard 274M

ANSI/SMPTE, SMPTE Standard 296M

EIA, CEB14, “Recommend Practice for use of EDID with EIA/CEA-861”

1.4 Organization of this document

This specification is organized as follows:

- Chapter 1 introduces HDMI, describes the purpose and scope of this document, references, organization of the document and usages and conventions.
- Chapter 2 defines terms and acronyms used throughout this document.
- Chapter 3 provides a high-level overview of the operation of HDMI.
- Chapter 4 describes the details of the Physical Layer of HDMI including basic electrical specifications and mechanical specifications of cables and connectors.
- Chapter 5 describes the Signaling and Encoding used by HDMI including descriptions of the different periods and encoding types used to transmit audio, video, and control data types and packet definitions for audio and auxiliary data.
- Chapter 6 describes Video related issues including video format timings, pixel encodings (RGB, YC_BC_R), colorimetry and corresponding requirements.
- Chapter 7 describes Audio related issues including audio clock regeneration, placement of audio samples within packets, packet timing requirements, audio sample rates and requirements, and channel/speaker assignments.
- Chapter 8 describes Control and Configuration functions, mechanisms and requirements, including use of the E-EDID, and InfoFrames.

IPR2024-001429
HP – EX1010, Page 14 of 193

- Chapter 9 describes the Content protection used for HDMI.
- Appendix A describes the usage of Repeaters and Switches.
- Appendix B describes restrictions related to the use of the Type B connector.
- Appendix C describes DVI compatibility.
- Supplement 1 describes use of the Consumer Electronics Control (CEC) line and protocol.

1.5 Usages and Conventions

bit N	Bits are numbered in little-endian format, i.e. the least-significant bit of a byte or word is referred to as bit 0.
D[X:Y]	Bit field representation covering bit X to bit Y (inclusive) of value or field D.
0xNN	Hexadecimal representation of base-16 numbers are represented using ‘C’ language notation, preceded by ‘0x’.
0bNN	Binary (base-2) numbers are represented using ‘C’ language notation, preceded by ‘0b’.
NN	Decimal (base-10) numbers are represented using no additional prefixes or suffixes.

Within this specification, any descriptions of data structures, values or sequences that occur on the HDMI interface should be interpreted only as data structures, values and sequences that are transmitted by the HDMI Source. Due to the possibility of errors during the transmission, these items should not be construed as data structures, values or sequences that are guaranteed to be detected by the HDMI Sink.

IPR2024-001429
HP – EX1010, Page 15 of 193

2 Definitions

2.1 Conformance Levels

expected	A key word used to describe the behavior of the hardware or software in the design models *assumed* by this specification. Other hardware and software design models may also be implemented.
may	A key word that indicates flexibility of choice with *no implied preference*.
shall	A key word indicating a mandatory requirement. Designers are *required* to implement all such mandatory requirements.
should	A key word indicating flexibility of choice with a strongly preferred alternative. Equivalent to the phrase *is recommended*.
reserved fields	A set of bits within a data structure that are defined in this specification as reserved, and are not otherwise used. Implementations of this specification shall zero these fields. Future revisions of this specification, however, may define their usage.
reserved values	A set of values for a field that are defined in this specification as reserved, and are not otherwise used. Implementations of this specification shall not generate these values for the field. Future revisions of this specification, however, may define their usage.

2.2 Glossary of Terms

(Audio) Channel	Audio data meant to be delivered to a single audio speaker.
(Audio) Sample Clock	Original clock related to the audio input samples at the Source or the generated clock used to time the output of audio samples.
BCH	Error correction technique named after the developers: Bose, Chauduri, and Hocquenghem.
Byte	Eight bits of data.
Data Stream Disparity	Integer indicating “DC-offset” level of link. A positive value represents the excess number of “1”s that have been transmitted. A negative value represents the excess number of “0”s that have been transmitted.
Downstream	In the direction of the primary audio and video data flow, i.e. towards the Sink (e.g. display).
(HDMI) Source	A device with an HDMI output.
(HDMI) Sink	A device with an HDMI input.
(HDMI) Repeater	A device with one or more HDMI inputs and one or more HDMI outputs. Repeater devices shall simultaneously behave as both an HDMI Sink and an HDMI Source.

IPR2024-001429
HP – EX1010, Page 16 of 193

Multi-channel	Audio with more than 2 channels. Typically this term is applied to 6 (5.1) channel streams. Also called surround formats.
Pixel	Picture Element. Refers to the actual element of the picture and the data point in the digital video stream representing such an element. This term may also apply to the data that is carried across the HDMI link during a single TMDS (pixel) clock cycle, even if that data does not actually represent a picture element.
Pixel Encoding	Bit placement and sequencing for the components of a pixel for a particular color space and chroma sampling.
Root (Device)	A device, generally a display device, formally defined by the following rule: A device that has no HDMI output or, a device which has chosen to take the physical address 0.0.0.0 (see Section 8.7).
Receiver	A component that is responsible for receiving the four differential TMDS input pairs at the input to an HDMI Sink and converting those signals into a digital output indicating a 24 bit, 12 bit, or 6 bit TMDS decoded word and indicating the TMDS coding mode used to decode those bits. This digital output may be contained within a semiconductor device or may be output from a semiconductor device.
Stereo	2 channel audio.
Stream	A time-ordered set of digital data originating from one Source and terminating at zero or more Sinks. A stream is characterized by bounded bandwidth requirements.
T_{bit}	Time duration of a single bit carried across the TMDS data channels.
T_{pixel}	Time duration of a single pixel carried across the TMDS data channels. This is equal to $10 * T_{bit}$.
Transmitter	A component that is responsible for driving the four differential TMDS output pairs into an HDMI output and for clocking the data driven into those four output pairs.
Video Field	The period from one VSYNC active edge to the next VSYNC active edge.
Video Format	A video format is sufficiently defined such that when it is received at the monitor, the monitor has enough information to properly display the video to the user. The definition of each format includes a Video Format Timing, the picture aspect ratio, and a colorimetry space.
Video Format Timing	The waveform associated with a video format. Note that a specific Video Format Timing may be associated with more than one Video Format (e.g., 720X480p@4:3 and 720X480p@16:9).
YC_BC_R	Digital representation of any video signal using one of several luminance/color-difference color spaces.

IPR2024-001429
HP – EX1010, Page 17 of 193

2.3 Acronyms and Abbreviations

ANSI	American National Standards Institute
AVI	Auxiliary Video Information
CEA	Consumer Electronics Association
CEC	Consumer Electronics Control
CTS	Cycle Time Stamp
DDC	Display Data Channel
DDWG	Digital Display Working Group
DTV	Digital Television
DVD	Digital Versatile Disc
DVI	Digital Visual Interface
E-DDC	Enhanced Display Data Channel
E-EDID	Enhanced Extended Display Identification Data
ECC	Error Correction Code
EDID	Extended Display Identification Data
EIA	Electronic Industries Alliance
HDCP	High-bandwidth Digital Content Protection
HDMI	High-Definition Multimedia Interface
HDTV	High-Definition Television
HPD	Hot Plug Detect
IEC	International Electrotechnical Commission
IEEE	Institute of Electrical and Electronics Engineers
ITU	International Telecommunications Union
L-PCM	Linear Pulse-Code Modulation
LSb	least significant bit
MPEG	Moving Picture Experts Group
MSb	most significant bit

IPR2024-001429
HP – EX1010, Page 18 of 193

N.C.	No connect.
PCB	Printed Circuit Board
Rx	Receiver
SMPTE	Society of Motion Picture & Television Engineers
STB	Set-Top Box
TERC4	TMDS Error Reduction Coding – 4 bit
TMDS	Transition Minimized Differential Signaling
Tx	Transmitter
VESA	Video Electronics Standards Association
VSDB	Vendor-Specific Data Block

IPR2024-001429
HP – EX1010, Page 19 of 193

3 Overview

HDMI system architecture is defined to consist of Sources and Sinks. A given device may have one or more HDMI inputs and one or more HDMI outputs. Each HDMI input on these devices shall follow all of the rules for an HDMI Sink and each HDMI output shall follow all of the rules for an HDMI Source.

As shown in *Figure 3-1 HDMI Block Diagram* the HDMI cable and connectors carry four differential pairs that make up the TMDS data and clock channels. These channels are used to carry video, audio and auxiliary data. In addition, HDMI carries a VESA DDC channel. The DDC is used for configuration and status exchange between a single Source and a single Sink. The optional CEC protocol provides high-level control functions between all of the various audiovisual products in a user's environment.

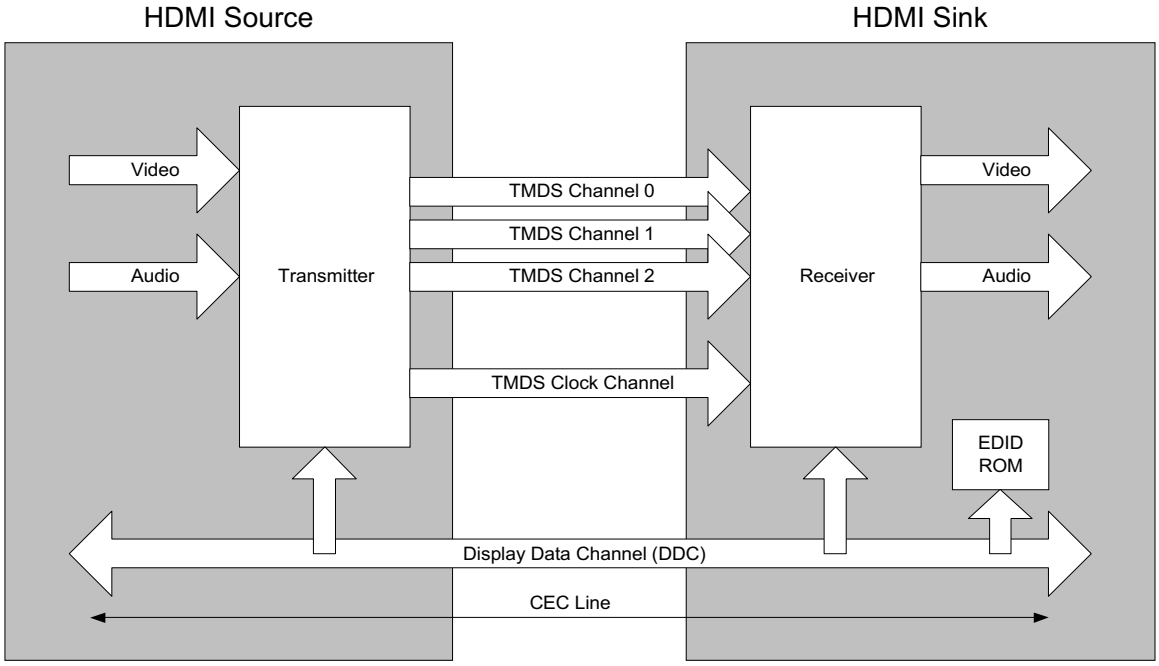

Figure 3-1 HDMI Block Diagram

Audio, video and auxiliary data is transmitted across the three TMDS data channels. The video pixel clock is transmitted on the TMDS clock channel and is used by the receiver as a frequency reference for data recovery on the three TMDS data channels.

Video data is carried as a series of 24-bit pixels on the three TMDS data channels. TMDS encoding converts the 8 bits per channel into the 10 bit DC-balanced, transition minimized sequence which is then transmitted serially across the pair at a rate of 10 bits per pixel clock period.

Video pixel rates can range from 25MHz to 165MHz. Video formats with rates below 25MHz (e.g. 13.5MHz for 480i/NTSC) can be transmitted using a pixel-repetition scheme. The video pixels can be encoded in either RGB, YC_BC_R 4:4:4 or YC_BC_R 4:2:2 formats. In all three cases, up to 24 bits per pixel can be transferred.

IPR2024-001429
HP – EX1010, Page 20 of 193

In order to transmit audio and auxiliary data across the TMDS channels, HDMI uses a packet structure. In order to attain the higher reliability required of audio and control data, this data is protected with a BCH error correction code and is encoded using a special error reduction coding to produce the 10-bit word that is transmitted.

Basic audio functionality consists of a single IEC 60958 audio stream at sample rates of 32kHz, 44.1kHz or 48kHz. This can accommodate any normal stereo stream. Optionally, HDMI can carry a single such stream at sample rates up to 192KHz or from two to four such streams (3 to 8 audio channels) at sample rates up to 96KHz. HDMI can also carry IEC 61937 compressed (e.g. surround-sound) stream at sample rates up to 192kHz.

The DDC is used by the Source to read the Sink's Enhanced Extended Display Identification Data (E-EDID) in order to discover the Sink's configuration and/or capabilities.

IPR2024-001429
HP – EX1010, Page 21 of 193

4 Physical Layer

4.1 Connectors and Cables

4.1.1 Overview of Connectors

A device's external HDMI connection shall be presented via one of the two specified HDMI connectors, Type A or Type B. This connector can be attached directly to the device or can be attached via a cable adapter that is shipped with the device.

The Type A connector carries all required HDMI signals, including a single TMDS link. The Type B connector is slightly larger and carries a second TMDS link which is necessary to support very high resolution computer displays requiring dual link bandwidth.

A passive cable adapter between Type A and Type B connectors is specified.

4.1.2 Connector Support Requirements

4.1.2.1 HDMI Sources

An HDMI Source connection using a Type A connector shall transmit only video format timings that are:

- Described in Section 6.3, or,
- Defined, per EDID Ver. 1.3, in the first, and only the first 18-byte timing descriptor of a concurrently attached HDMI compliant Sink.

An HDMI Source connection using a Type B connector may transmit any video format timing.

4.1.2.2 HDMI Sinks

An HDMI Sink connection using a Type A connector may define support, via E-EDID, only for video format timings that are:

- Described in Section 6.3, or,
- Defined within the first and only the first 18-byte timing descriptor found in the EDID 1.3 structure of this Sink.

An HDMI Sink connection using a Type B connector may define support for any video format timing, via any of the EDID 1.3 or EIA/CEA-861B mechanisms.

Beyond the specific video format timing restrictions defined in this section (above), no other video differences between Type A and Type B devices are defined in this specification.

4.1.3 Dual-Link

The Type A connector carries only a single TMDS link and is therefore only permitted to carry signals up to 165Mpixels/sec.

To support signals greater than 165Mpixels/sec, the dual-link capability of the Type B connector shall be used.

IPR2024-001429
HP – EX1010, Page 22 of 193

HDMI dual-link architecture is compatible with DVI 1.0 dual-link architecture and is defined in Appendix B.

4.1.4 Connector Pin Assignments

Table 4-1 Type A Connector Pin Assignment

PIN	Signal Assignment	PIN	Signal Assignment
1	TMDS Data2+	2	TMDS Data2 Shield
3	TMDS Data2–	4	TMDS Data1+
5	TMDS Data1 Shield	6	TMDS Data1–
7	TMDS Data0+	8	TMDS Data0 Shield
9	TMDS Data0–	10	TMDS Clock+
11	TMDS Clock Shield	12	TMDS Clock–
13	CEC	14	Reserved (N.C. on device)
15	SCL	16	SDA
17	DDC/CEC Ground	18	+5V Power
19	Hot Plug Detect		

IPR2024-001429
HP – EX1010, Page 23 of 193

Table 4-2 Type B Connector Pin Assignment

PIN	Signal Assignment	PIN	Signal Assignment
1	TMDS Data2+	2	TMDS Data2 Shield
3	TMDS Data2-	4	TMDS Data1+
5	TMDS Data1 Shield	6	TMDS Data1-
7	TMDS Data0+	8	TMDS Data0 Shield
9	TMDS Data0-	10	TMDS Clock+
11	TMDS Clock Shield	12	TMDS Clock-
13	TMDS Data5+	14	TMDS Data5 Shield
15	TMDS Data5-	16	TMDS Data4+
17	TMDS Data4 Shield	18	TMDS Data4-
19	TMDS Data3+	20	TMDS Data3 Shield
21	TMDS Data3-	22	CEC
23	Reserved (N.C. on device)	24	Reserved (N.C. on device)
25	SCL	26	SDA
27	DDC/CEC Ground	28	+5V Power
29	Hot Plug Detect		

4.1.5 Contact sequence

Table 4-3 Connector Contact Sequence

Connection	Signals	
	Type A Connector	Type B Connector
First Make	Connector shell	Connector shell
Second Make	Pins 1 - 17 and pin 19	Pins 1 - 27 and pin 29
Third Make	Pin18 (+5V Power)	Pin28 (+5V Power)

IPR2024-001429
HP – EX1010, Page 24 of 193

4.1.6 Connector Mechanical Performance

Table 4-4 Type A Plug and Receptacle Mechanical Performance

Item	Test Condition	Requirement	
Vibration	Amplitude : 1.52mm P-P or 147m/s^2 {15G} Sweep time: 50-2000-50Hz in 20 minutes. Duration : 12 times in each (total of 36 Times) X, Y, Z axes. Electrical load : DC100mA current shall be Flowed during the test. (ANSI/EIA-364-28 Condition III Method 5A)	Appearance	No Damage
		Contact Resistance	Contact : Change from initial value: 30 milliohms maximum. Shell Part : Change from initial value: 50 milliohms maximum.
		Discontinuity	1 μsec maximum.
Shock	Pulse width: 11 msec., Waveform : half sine, 490m/s^2{50G}, 3 strokes in each X.Y.Z. axes (ANSI/EIA-364-27, Condition A)	Appearance	No Damage
		Contact Resistance	Contact : Change from initial value: 30 milliohms maximum. Shell : Change from initial value: 50 milliohms maximum.
		Discontinuity	1 μsec maximum.
Durability	Measure contact and shell resistance after Following. Automatic cycling : 10,000 cycles at 100 ± 50 cycles per hour	Contact Resistance	Contact : Change from initial value: 30 milliohms maximum. Shell : Change from initial value: 50 milliohms maximum.

IPR2024-001429
HP – EX1010, Page 25 of 193

Item	Test Condition	Requirement	
Insertion / Withdrawal Force	Insertion and withdrawal speed : 25mm/minute. (ANSI/EIA-364-13)	Withdrawal force	9.8N {1.0kgf} minimum 39.2N {4.0kgf} maximum
		Insertion force	44.1N {4.5kgf} maximum
Cable Flex	100 cycles in each of 2 planes Dimension X = 3.7 x Cable Diameter. (ANSI/EIA-364-41, Condition I)	Discontinuity	1 μsec maximum.
		Dielectric Withstanding Voltage and Insulation Resistance	Conform to item of dielectric withstanding voltage and insulation resistance

IPR2024-001429
HP – EX1010, Page 26 of 193

4.1.7 Connector Electrical Characteristics

4.1.7.1 Electrical Performance

Table 4-5 Electrical Performance

Item	Test Condition	Requirement
Contact Resistance	Mated connectors, Contact : measure by dry circuit, 20 mVolts maximum.,10mA. Shell : measured by open circuit, 5 Volts maximum ,100mA. (ANSI/EIA-364-06A-83)	Contact : 30 milliohms maximum. Shell : 50 milliohms maximum.
Dielectric Strength	Unmated connectors, apply 500 Volts AC(RMS.) between Adjacent terminal or ground. (ANSI/EIA 364-20,Method 301) Mated connector, apply 300 Volts AC(RMS.) between adjacent terminal and ground.	No Breakdown
Insulation Resistance	Unmated connectors, apply 500 Volts DC between adjacent terminal or ground. (ANSI/EIA 364-21,Method 302)	100 megaohms minimum (unmated)
	Mated connectors, apply 150 Volts DC between adjacent terminal or ground.	10 megaohms minimum (mated)
Contact Current Rating	55 °C, maximum ambient 85 °C, maximum temperature change (ANSI/EIA-364-70,TP-70)	0.5 A minimum
Applied Voltage Rating	40 Volts AC (RMS.) continuous maximum, on any signal pin with respect to the shield.	No Breakdown
Electrostatic Discharge	Test unmated each connectors from 1 kVolt to 8 kVolts in 1 kVolt steps using 8mm ball probe. (IEC-801-2)	No evidence of Discharge to Contacts at 8 kVolts

IPR2024-001429
HP – EX1010, Page 27 of 193

Item	Test Condition	Requirement
TMDS Signals Time Domain Impedance	Rise time ≤ 200 psec (10%-90%). Signal to Ground pin ratio per HDMI designation. Differential Measurement Specimen Environment Impedance = 100 ohms differential Source-side receptacle connector mounted on a Controlled impedance PCB fixture. (ANSI/EIA-364-108 Draft Proposal)	Connector Area : 100 ohms ±15% Transition Area : 100 ohms ±15% Cable Area : 100 ohms ±10%
TMDS Signals Time Domain Cross talk FEXT	Rise time ≤ 200 psec (10%-90%). Signal to Ground pin ratio per HDMI designation. Differential Measurement Specimen Environment Impedance = 100 ohms differential. Source-side receptacle connector mounted on controlled impedance PCB fixture. Driven pair and victim pair. (ANSI/EIA-364-90 Draft Proposal)	5 % maximum

IPR2024-001429
HP – EX1010, Page 28 of 193

4.1.8 Connector Environmental Characteristics

4.1.8.1 Environmental Performance

Table 4-6 Connector Environmental Performance

Item	Test Condition		Requirement	
Thermal Shock	10 cycles of: a) -55°Cfor 30 minutes b) +85°C for 30 minutes (ANSI/EIA-364-32, Condition I)		Appearance	No Damage
			Contact Resistance	Contact : Change from initial value: 30 milliohms maximum. Shell Part : Change from initial value: 50 milliohms maximum.
Humidity	A	Mate connectors together and perform the test as follows. Temperature : +25 to +85°C Relative Humidity : 80 to 95% Duration : 4 cycles (96 hours) Upon completion of the test, specimens shall be conditioned at ambient room conditions for 24 hours, after which the specified measurements shall be performed. (ANSI/EIA-364-31)	Appearance	No Damage
			Contact Resistance	Contact : Change from initial value: 30 milliohms maximum. Shell : Change from initial value: 50 milliohms maximum.
	B	Unmated each connectors and perform the test as follows. Temperature : +25 to +85°C Relative Humidity : 80 to 95% Duration : 4 cycles (96 hours) Upon completion of the test, specimens shall be conditioned at ambient room conditions for 24 hours, after which the specified measurements shall be performed. (ANSI/EIA-364-31)	Appearance	No Damage
			Dielectric Withstanding Voltage and Insulation Resistance	Conform to item of Dielectric Withstanding Voltage and Insulation Resistance

IPR2024-001429
HP – EX1010, Page 29 of 193

Item	Test Condition	Requirement	
Thermal Aging	Mate connectors and expose to +105 ± 2°C for 250 hours. Upon completion of the exposure period, the test specimens shall be conditioned at ambient room conditions for 1 to 2 hours, after which the specified measurements shall be performed. (ANSI/EIA-364-17, Condition 4, Method A)	Appearance	No Damage
		Contact Resistance	Contact : Change from initial value: 30 milliohms maximum. Shell Part : Change from initial value: 50 milliohms maximum.

IPR2024-001429
HP – EX1010, Page 30 of 193

4.1.9 Connector Drawings

All dimensions in millimeters.

4.1.9.1 Type A Receptacle

4.1.9.1.1 Mating Interface Dimensions

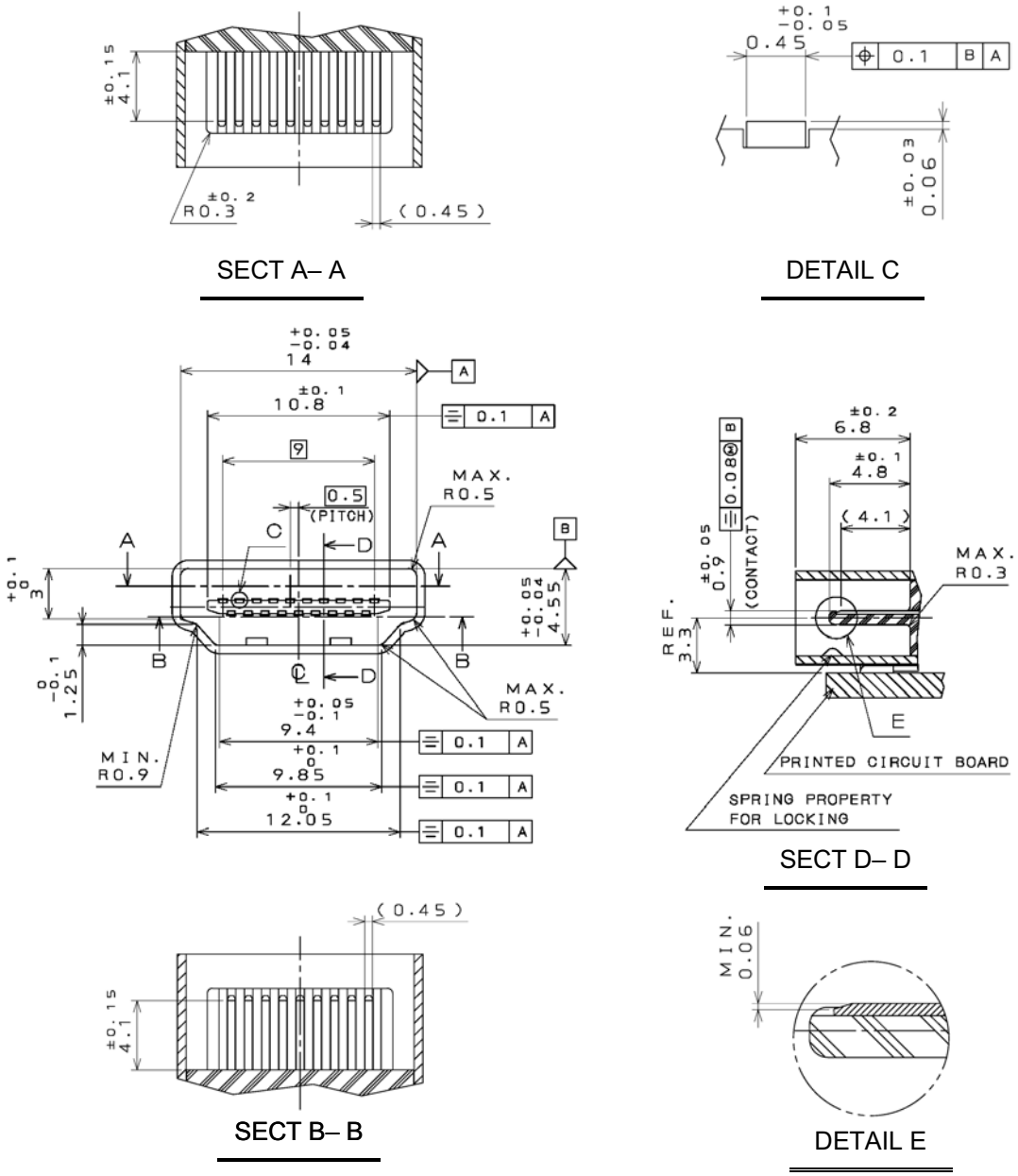

- The shell shall have springs for locking. Additional springs may be used for EMI reduction.
- The spring property for locking shall be activated by the locking hole of the plug shell.

Figure 4-1 Type A Receptacle Mating Interface Dimensions

IPR2024-001429
HP – EX1010, Page 31 of 193

4.1.9.2 Type A Plug

4.1.9.2.1 Mating Interface Dimensions

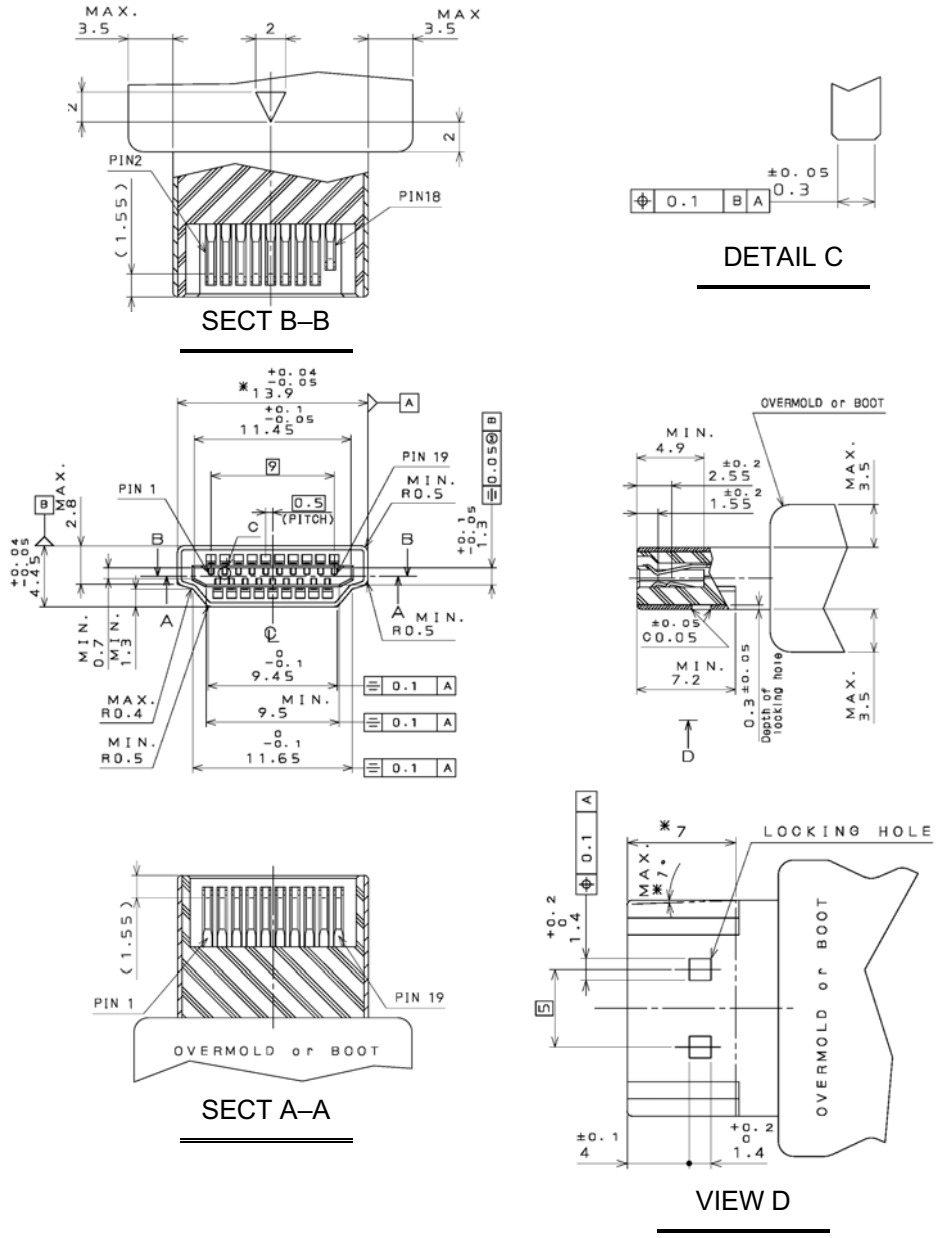

- The dimension of *13.9mm (+0.04 / -0.05) (on main section) should be measured at the point *7mm (on view D). The taper (on view D) shall be one degree max.
- The shell should not have a dimple other than the ones for locking.

Figure 4-2 Type A Plug Mating Interface Dimensions

IPR2024-001429
HP – EX1010, Page 32 of 193

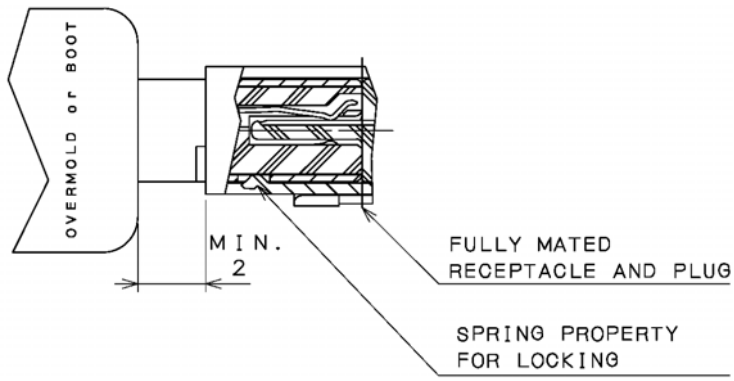

Figure 4-3 Type A Receptacle and Plug Mated Condition

IPR2024-001429
HP – EX1010, Page 33 of 193

4.1.9.3 Type B Receptacle

4.1.9.3.1 Mating Interface Dimensions

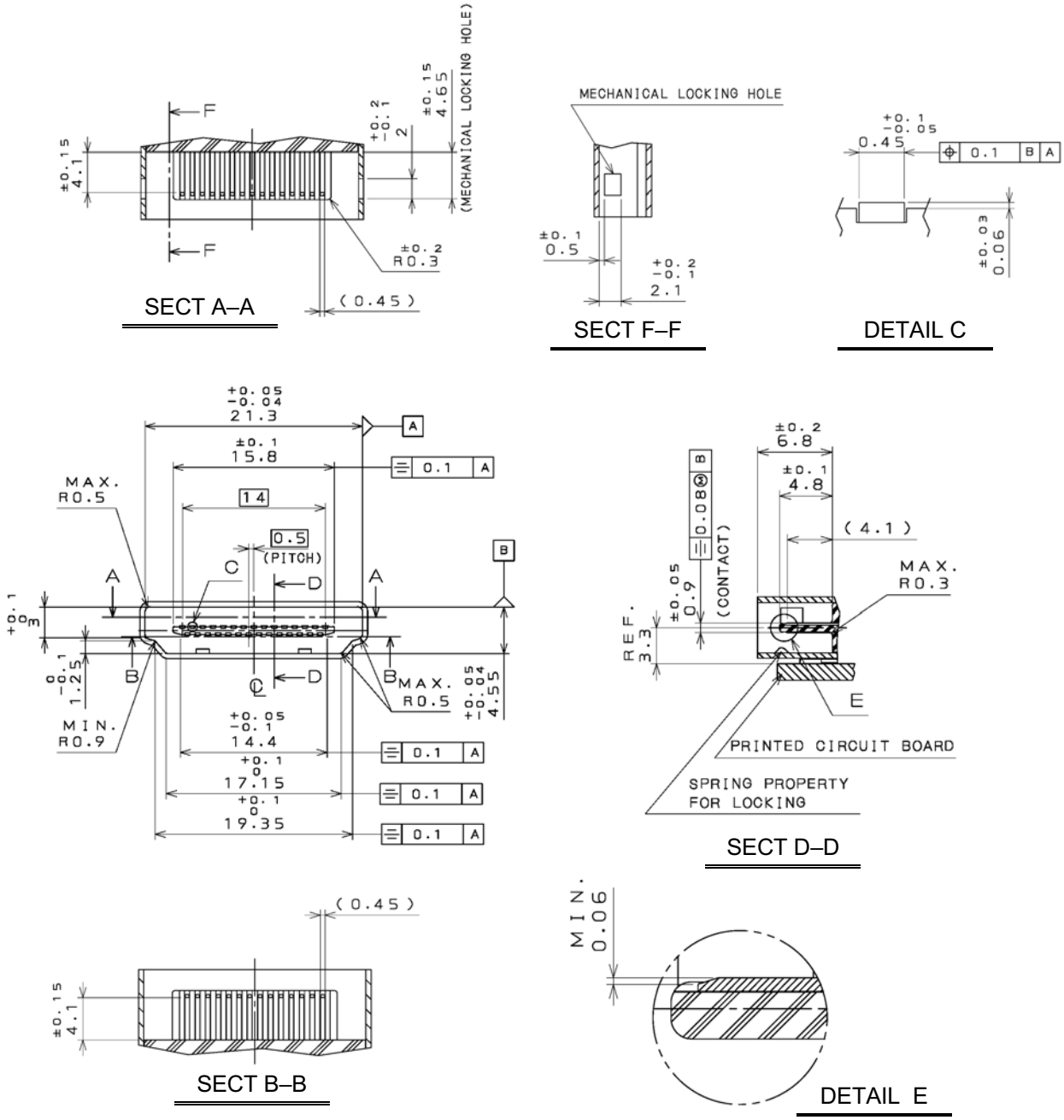

- The shell shall have springs for locking. Additional springs may be used for EMI reduction.
- The spring property for locking shall be activated by the locking hole of the plug shell.

Figure 4-4 Type B Receptacle Mating Interface Dimensions

IPR2024-001429
HP – EX1010, Page 34 of 193

4.1.9.4 Type B Plug

4.1.9.4.1 Mating Interface Dimensions

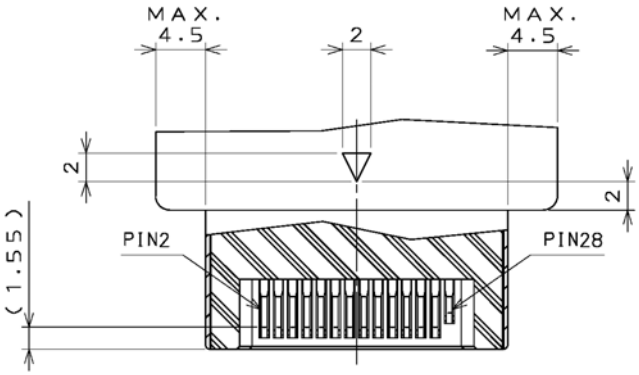

SECT B–B

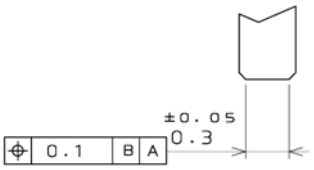

DETAIL C

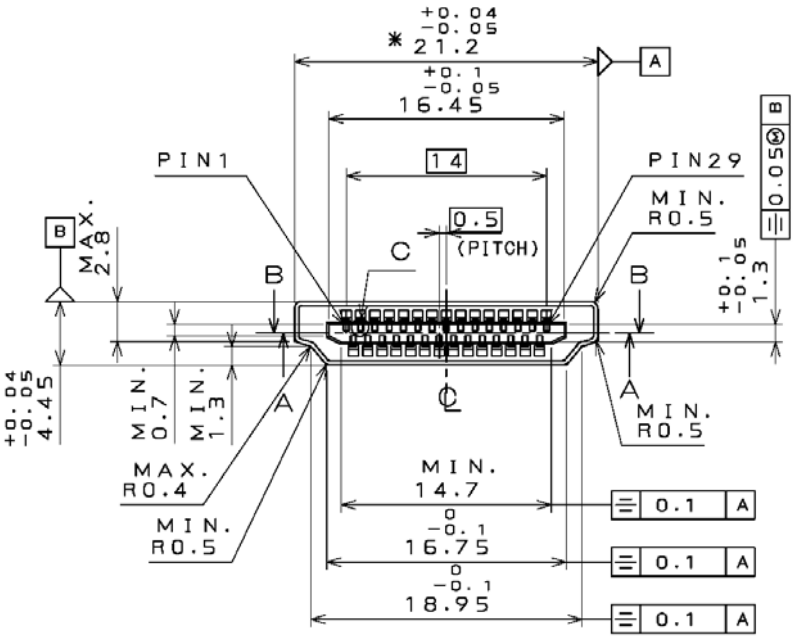

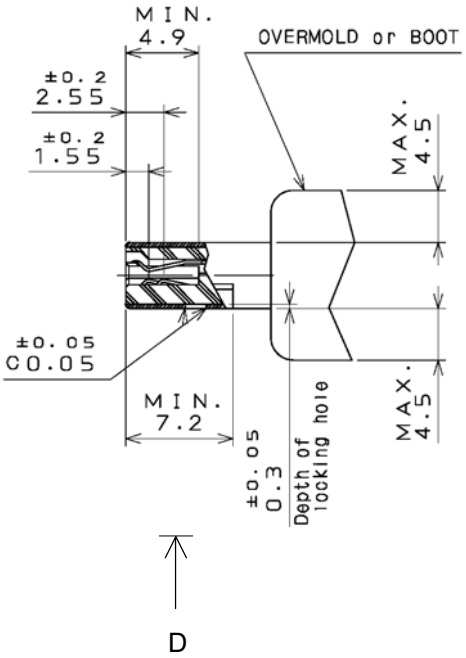

"VIEW D" → NEXT PAGE

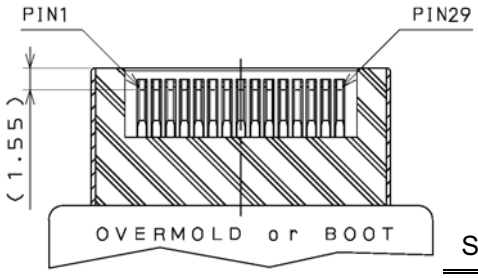

SECT A–A

- The dimension of *21.2mm (+0.04 / -0.05) (on main section) should be measured at the point *7mm (on view D). The taper (on view D) shall be one degree max.
- The shell should not have a dimple other than the ones for locking.

IPR2024-001429
HP – EX1010, Page 35 of 193

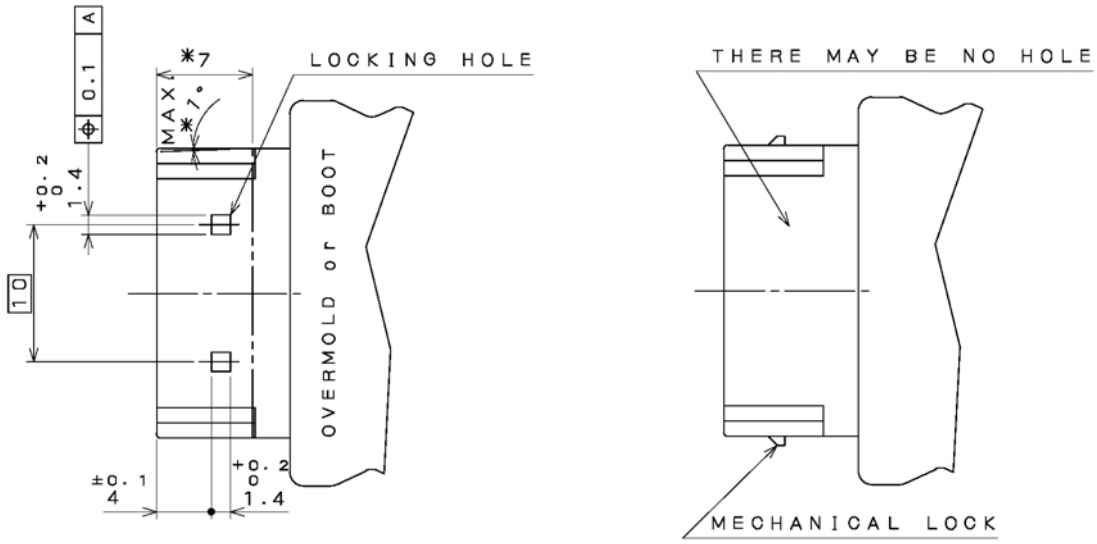

FRICTION LOCK TYPE

MECHANICAL LOCK TYPE
The spring property for locking should be activated by the locking hole of the plug shell.

Figure 4-5 Type B Plug Mating Interface Dimensions

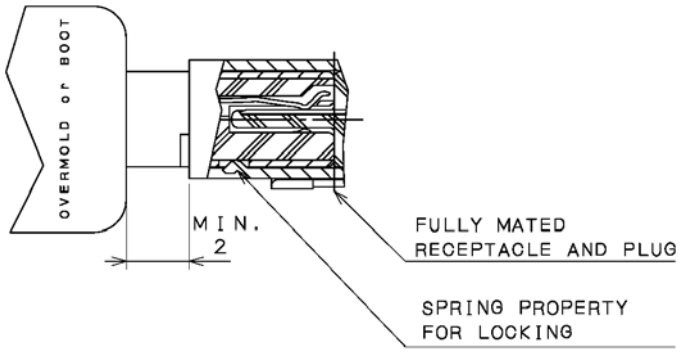

Figure 4-6 Type B Receptacle and Plug Mated Condition

IPR2024-001429
HP – EX1010, Page 36 of 193

4.1.10 Cable Adapter Specification

Table 4-7 Wire Categories

Category	Description
A	TMDS Signal Wire
B	TMDS Shield
C	Control
D	Control Ground
N.C.	No connect (no wire)
5V	5 Volts Power Wire

IPR2024-001429
HP – EX1010, Page 37 of 193

4.1.10.1 Type A Connector to Type A Connector

Type A Connector → Type A Connector

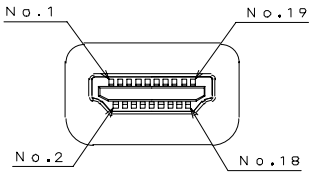

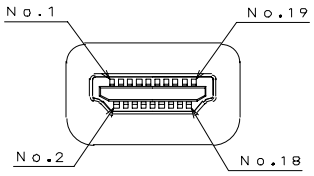

Table 4-8 Type A-to-Type A Cable Wire Assignment

Type A pin	Signal Name	Wire	Type A pin
1	TMDS Data2+	A	1
2	TMDS Data2 Shield	B	2
3	TMDS Data2–	A	3
4	TMDS Data1+	A	4
5	TMDS Data1 Shield	B	5
6	TMDS Data1–	A	6
7	TMDS Data0+	A	7
8	TMDS Data0 Shield	B	8
9	TMDS Data0–	A	9
10	TMDS Clock+	A	10
11	TMDS Clock Shield	B	11
12	TMDS Clock–	A	12
13	CEC	C	13
14	Reserved (in cable but N.C. on device)	C	14
15	SCL	C	15
16	SDA	C	16
17	DDC/CEC Ground	D	17
18	+5V Power	5V	18
19	Hot Plug Detect	C	19

IPR2024-001429
HP – EX1010, Page 38 of 193

4.1.10.2 Type A Connector to Type B Connector

Type A Connector → Type B Connector

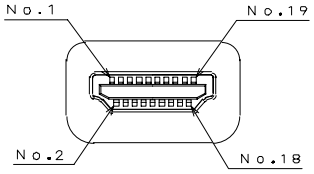

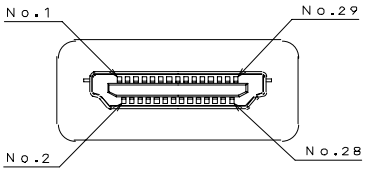

Table 4-9 Type A-to-Type B Cable Wire Assignment

Type A pin	Pin Assignment	Wire	Type B pin
1	TMDS Data2+	A	1
2	TMDS Data2 Shield	B	2
3	TMDS Data2-	A	3
4	TMDS Data1+	A	4
5	TMDS Data1 Shield	B	5
6	TMDS Data1-	A	6
7	TMDS Data0+	A	7
8	TMDS Data0 Shield	B	8
9	TMDS Data0-	A	9
10	TMDS Clock+	A	10
11	TMDS Clock Shield	B	11
12	TMDS Clock-	A	12
13	CEC	C	22
15	SCL	C	25
16	SDA	C	26
17	DDC/CEC Ground	D	27
18	+5V Power	5V	28
19	Hot Plug Detect	C	29
14	No connect	N.C.	
	No connect	N.C.	23
	No connect	N.C.	24

IPR2024-001429
HP – EX1010, Page 39 of 193

4.1.10.3 Type B Connector to Type B Connector

Table 4-10 Type B to Type B Cable Wire Assignment

Type B pin	Pin Assignment	Wire	Type B pin
1	TMDS Data2+	A	1
2	TMDS Data2 Shield	B	2
3	TMDS Data2-	A	3
4	TMDS Data1+	A	4
5	TMDS Data1 Shield	B	5
6	TMDS Data1-	A	6
7	TMDS Data0+	A	7
8	TMDS Data0 Shield	B	8
9	TMDS Data0-	A	9
10	TMDS Clock+	A	10
11	TMDS Clock Shield	B	11
12	TMDS Clock-	A	12
13	TMDS Data5+	A	13
14	TMDS Data5 Shield	B	14
15	TMDS Data5-	A	15
16	TMDS Data4+	A	16
17	TMDS Data4 Shield	B	17
18	TMDS Data4-	A	18
19	TMDS Data3+	A	19
20	TMDS Data3 Shield	B	20
21	TMDS Data3-	A	21
22	CEC	C	22
25	SCL	C	25
26	SDA	C	26
27	DDC/CEC Ground	D	27
28	+5V Power	5V	28
29	Hot Plug Detect	C	29
23	No Connect	N.C.	
24	No Connect	N.C.	
	No Connect	N.C.	23
	No Connect	N.C.	24

IPR2024-001429
HP – EX1010, Page 40 of 193

4.2 Electrical Specification

Some timing parameter values in this specification are based on the clock rate of the link while others are based on absolute values. For scalable timing parameters based on the clock rate, the time period of the clock is denoted as 'pixel time', or T_{pixel}. One tenth of the pixel time is called the bit time, or T_{bit}. The bit time is also referred to as one Unit Interval in the jitter and eye diagram specifications.

Schematic diagrams contained in this chapter are for illustration only and do not represent the only feasible implementation.

4.2.1 Overview

The conceptual schematic of one TMDS differential pair is shown in Figure 4-7. TMDS technology uses current drive to develop the low voltage differential signal at the Sink side of the DC-coupled transmission line. The link reference voltage AV_{cc} sets the high voltage level of the differential signal, while the low voltage level is determined by the current source of the HDMI Source and the termination resistance at the Sink. The termination resistance (R_T) and the characteristic impedance of the cable (Z_0) must be matched.

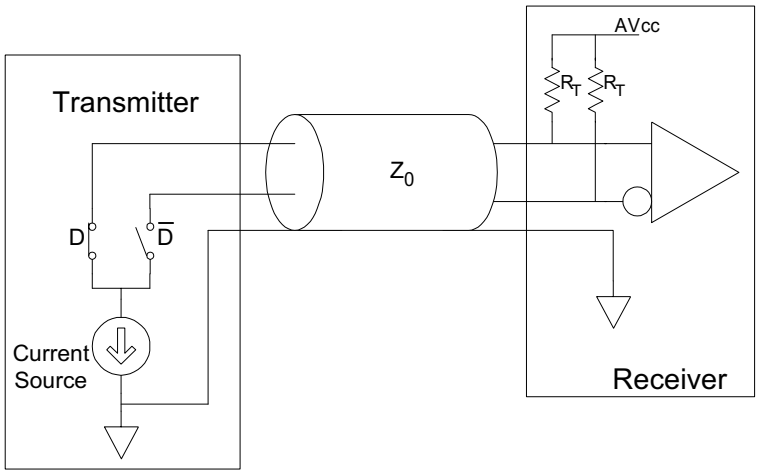

Figure 4-7 Conceptual Schematic for one TMDS differential pair

A single-ended differential signal, representing either the positive or negative terminal of a differential pair, is illustrated in Figure 4-8. The nominal high-level voltage of the signal is AV_{cc} and the nominal low-level voltage of the signal is (AV_{cc} - V_{swing}). Since the swing is differential on the pair, the net signal on the pair has a swing twice that of the single-ended signal, or $2*V_{swing}$. The differential signal, as shown in Figure 4-9, swings between positive V_{swing} and negative V_{swing}.

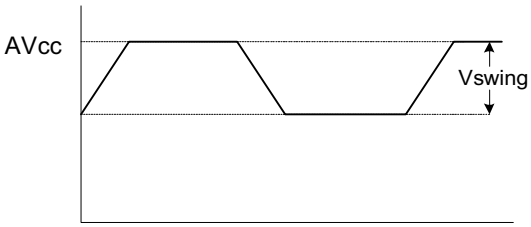

Figure 4-8 Single-ended Differential Signal

IPR2024-001429
HP – EX1010, Page 41 of 193

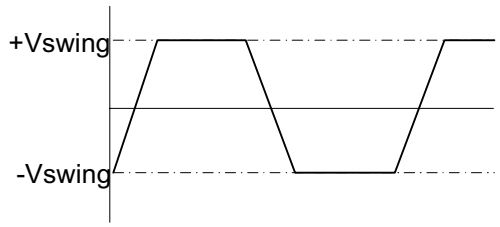

Figure 4-9 Differential Signal

The signal test points for a TMDS link are shown in Figure 4-10. TP1 is used for testing of HDMI Sources and Transmitter components. TP2 is used for testing of HDMI Sinks and Receiver components. TP1 and TP2 together are also used for testing of cables.

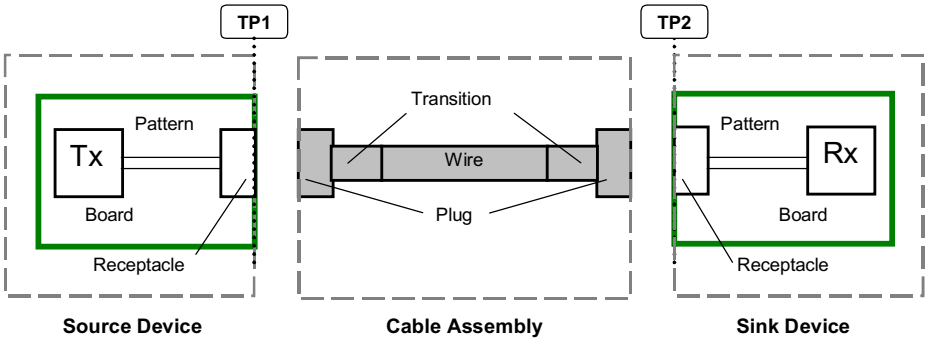

Figure 4-10 TMDS Link Test Points

4.2.2 System Operating Conditions

The required operating conditions of the TMDS pairs are specified in Table 4-11.

Table 4-11 Required Operating Conditions for HDMI Interface (see Figure 4-7)

Item	Value
Termination Supply Voltage, AV_{cc}	3.3 Volts ±5%
Termination Resistance, R_T	50 ohms ±10%

4.2.3 Jitter and Eye Measurements: Ideal Recovery Clock

All TMDS Clock and Data signal jitter specifications are specified relative to an Ideal Recovery Clock defined below. The Data jitter is not specified numerically, but instead, an HDMI device or cable shall adhere to the appropriate eye diagram(s) when the TMDS data signals are measured using an Ideal Recovery Clock as a trigger source.

The TMDS Clock signal may contain low-frequency jitter components, which can be tracked by a Sink's clock recovery circuitry, and high-frequency components, which are not typically tracked.

IPR2024-001429
HP – EX1010, Page 42 of 193

The purpose of the Ideal Recovery Clock is to give an accurate representation of link performance when used as a trigger for eye diagram and clock jitter specifications.

For the purposes of jitter and eye diagram specification, the Ideal Recovery Clock is defined relative to the TMDS clock signal. The Ideal Recovery Clock shall be equivalent to the signal that would be derived by a perfect PLL with a jitter transfer function shown in Equation 4-1, when the TMDS clock signal were input into that PLL. This jitter transfer function has the behavior of a low pass filter with 20dB/decade rolloff and with a –3dB point of 4MHz.

For the purposes of compliance testing, a Clock Recovery Unit is used to generate a Recovered Clock, which is meant to approximate the Ideal Recovery Clock. This Recovered Clock is used for measurement of the jitter and eye diagram.

$$H(j\omega) = 1 / (1 + j\omega/\omega_0)$$

Where $\omega_0 = 2\pi F_0$, $F_0 = 4.0\text{MHz}$

Equation 4-1 Jitter Transfer Function of PLL for Ideal Recovery Clock Definition

4.2.4 HDMI Source TMDS Characteristics

HDMI requires a DC-coupled TMDS link. Source electrical testing shall be performed using the test load shown in Figure 4-11. TP1 represents the connection point of the receptacle.

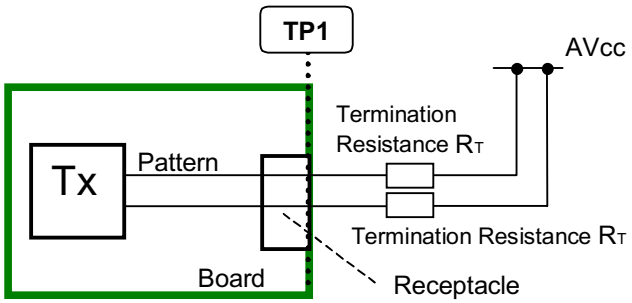

Figure 4-11 Balanced Source Test Load

The Source shall meet the DC specifications in Table 4-12 for all operating conditions specified in Table 4-11 when driving clock and data signals. The V_{swing} parameter identifies the minimum and maximum single-ended peak-to-peak signal amplitude that may be delivered by the Source into the test load.

IPR2024-001429
HP – EX1010, Page 43 of 193

Table 4-12 Source DC Characteristics at TP1

Item	Value
Single-ended high level output voltage, V_H	AV_{cc} ±10mVolts
Single-ended low level output voltage, V_L	(AV_{cc} - 600mVolts) ≤ V_L ≤ (AV_{cc} - 400mVolts)
Single-ended output swing voltage, V_{swing}	400mVolts ≤ V_{swing} ≤ 600mVolts
Single-ended standby (off) output voltage, V_{OFF}	AV_{cc} ±10mVolts (Informative)
Single-ended standby (off) output current, I_{OFF}	| I_{OFF} | < 10uA

The Source shall meet the AC specifications in Table 4-13 across all operating conditions specified in Table 4-11. Rise and fall times are defined as the signal transition time between 20% and 80% of the nominal swing voltage (V_{swing}) of the device under test.

The Source intra-pair skew is the maximum allowable time difference (on both low-to-high and high-to-low transitions) as measured at TP1, between the true and complement signals of a given differential pair. This time difference is measured at the midpoint on the single-ended signal swing of the true and complement signals. The Source inter-pair skew is the maximum allowable time difference (on both low-to-high and high-to-low transitions) as measured at TP1, between any two single-ended data signals that do not constitute a differential pair.

Table 4-13 Source AC Characteristics at TP1

Item	Value
Rise time / fall time (20%-80%)	75psec ≤ Rise time / fall time ≤ 0.4 T_{bit}
Overshoot, max	15% of full differential amplitude (V_{swing}*2)
Undershoot, max	25% of full differential amplitude (V_{swing}*2)
Intra-Pair Skew at Source Connector, max	0.15 T_{bit}
Inter-Pair Skew at Source Connector, max	0.20 T_{pixel}
Clock duty cycle, min / average / max	40% / 50% / 60%
TMDS Differential Clock Jitter, max	0.25 T_{bit} (relative to Ideal Recovery Clock as defined in Section 4.2.3)

The design of a Source should take into account the differential impedance of the cable assembly and Sink of 100 ohms (see Table 4-17 and Table 4-18).

For all channels under all operating conditions specified in Table 4-11 and when terminated as shown in Figure 4-11, the Source shall have output levels at TP1, which meet the normalized eye diagram requirements of Figure 4-12. This requirement, normalized in both time and amplitude, specifies the minimum eye opening as well as the maximum overshoot and undershoot relative to the average differential swing voltage of the device under test. The time axis is normalized to the bit time at the testing frequency, while the amplitude axis is normalized to the average differential swing voltage.

IPR2024-001429
HP – EX1010, Page 44 of 193

Determination of average swing voltage is made with transmission of the half clock test pattern. The average high-level and low-level amplitudes are determined at the point where signal ringing has subsided. These averages establish the swing voltage and are used to normalize the eye diagram.

The average differential swing voltage is defined as the difference between the average differential amplitude when driving a logic one and the average differential amplitude when driving a logic zero. The average logic one appears at positive 0.5 on the vertical axis, while the average logic zero appears at negative 0.5. The normalized amplitude limits in Figure 4-12 allow 15% (of the average differential swing voltage) maximum overshoot and 25% maximum undershoot, relative to the amplitudes determined to be logic one and zero.

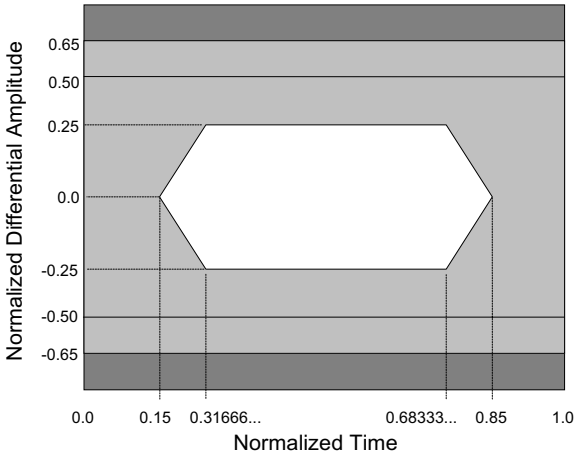

Figure 4-12 Normalized Eye Diagram Mask at TP1 for Source Requirements

Combining the single-ended swing voltage (V_{swing}) specified in Table 4-12 with the overshoot and undershoot requirements of Figure 4-12, it is possible to calculate the minimum and maximum high-level voltage (V_{high}) and low-level voltage (V_{low}) that is allowable on the interface.

V_{high} (max) = V_{swing} (max) + 15% * (2*V_{swing} (max)) = 600 + 180 = 780 mV

V_{high} (min) = V_{swing} (min) - 25% * (2*V_{swing} (min)) = 400 - 200 = 200 mV

V_{low} (max) = -V_{swing} (max) - 15% * (2*V_{swing} (max)) = -600 - 180 = -780 mV

V_{low} (min) = -V_{swing} (min) + 25% * (2*V_{swing} (min)) = -400 + 200 = -200 mV

Minimum opening at Source = V_{high} (min) - V_{low} (min) = 400 mV

Note that the combination of these extreme cases do not constitute a single valid eye.

Source eye diagram test procedures are defined in the HDMI Compliance Test Specification. The Source eye diagram mask of Figure 4-12 is not used for response time and clock jitter specifications, but specifies the clock to data jitter indirectly.

IPR2024-001429
HP – EX1010, Page 45 of 193

4.2.5 HDMI Sink TMDS Characteristics

HDMI Sink electrical testing shall be performed using a test signal generator as shown in Figure 4-13.

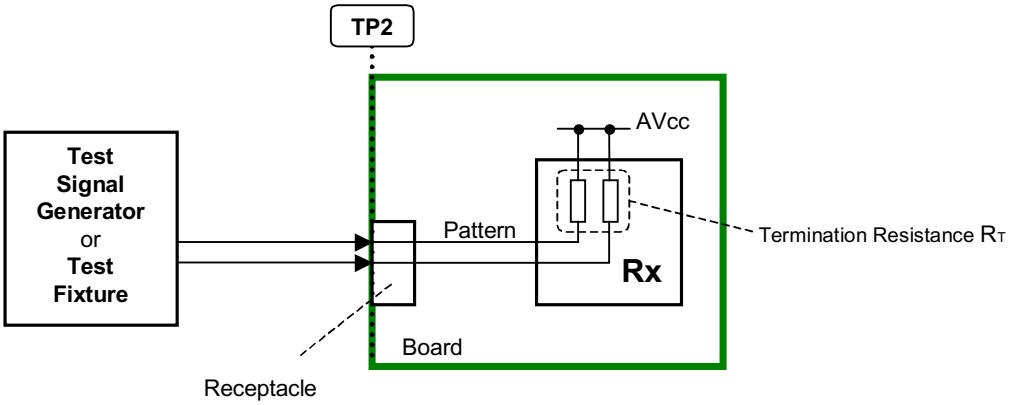

Figure 4-13 HDMI Sink Test Points

The Sink shall meet the signal requirements listed in Table 4-14, Table 4-15, and Table 4-16.

Table 4-14 Sink Operating DC Characteristics at TP2

Item	Value
Input Differential Voltage Level, V_{idiff}	$150 \leq V_{idiff} \leq 1200$ mVolts
Input Common Mode Voltage, V_{icm}	$(AV_{cc} – 300mVolts) \leq V_{icm} \leq (AV_{cc} – 37.5mVolts)$

Table 4-15 Sink DC Characteristics When Source Disabled or Disconnected at TP2

Item	Value
Differential Voltage Level	AV_{cc} ±10mVolts

IPR2024-001429
HP – EX1010, Page 46 of 193

Table 4-16 Sink AC Characteristics at TP2

Item	Value
Minimum differential sensitivity (peak-to-peak)	150 mVolts
Maximum differential input (peak-to-peak)	1560 mVolts
Allowable Intra-Pair Skew at Sink Connector	0.4 T_{bit}
Allowable Inter-Pair Skew at Sink Connector	0.6 T_{pixel}
TMDS Clock Jitter	0.30 T_{bit} (relative to Ideal Recovery Clock as defined in Section 4.2.3)

Table 4-17 HDMI Sink Impedance Characteristics at TP2

Item	Value
TDR Rise Time at TP2 (10%-90%)	≤200 psec
Through connection impedance	100 ohms ±15%
At Termination impedance	100 ohms ±10%

For all channels under all operating conditions specified in this section, the Sink shall reproduce a test data stream, with video pixel error rate of 10^{-9} or better, when presented with input amplitude illustrated by the eye diagram of Figure 4-14.

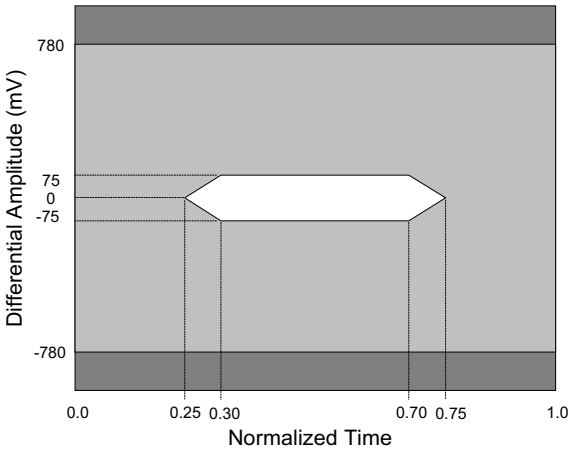

Figure 4-14 Absolute Eye Diagram Mask at TP2 for Sink Requirements

IPR2024-001429
HP – EX1010, Page 47 of 193

4.2.6 Cable Assembly

The term “Cable assembly” includes all five parts listed below:

- Source-side plug
- Source-side transition (from plug to cable)
- Cable itself
- Sink-side transition
- Sink-side plug

HDMI cables are measured with respect to the test points TP3 and TP4 shown in Figure 4-15. TP1 and TP2 are not available because connection points between plug and receptacle cannot be accessed during testing. Therefore, TP3 and TP4 are used, even though the effects of receptacles at both ends are included in the test result.

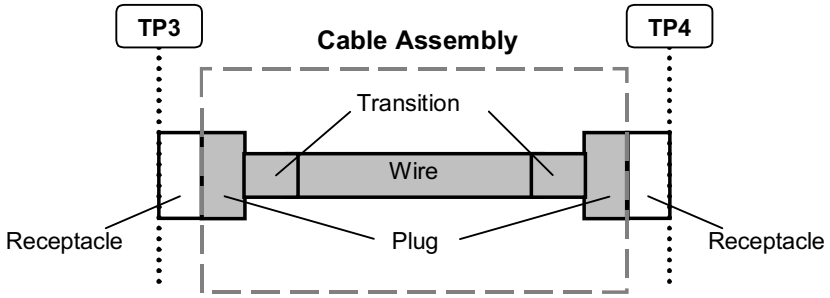

Figure 4-15 Cable Assembly Test Points

An HDMI cable assembly may be specified to operate up to a specified maximum pixel clock frequency. This specified maximum frequency shall be above 75MHz.

When driven by a TMDS input waveform meeting the Source eye diagram mask requirements of Figure 4-12 at the specified maximum pixel clock frequency, an HDMI cable assembly shall produce a TMDS output waveform that meets the Sink eye diagram mask of Figure 4-14.

In addition a cable should meet the specifications shown in Table 4-18.

IPR2024-001429
HP – EX1010, Page 48 of 193

Table 4-18 Cable Assembly Parameters

Parameter	Value
Maximum Cable Assembly Intra-Pair Skew	151psec (0.25 T_{bit})
Maximum Cable Assembly Inter-Pair Skew	2.42nsec (0.4 T_{pixel})
Far-end Crosstalk	< -26dB
Attenuation	
300kHz - 825MHz	< 8dB
825MHz - 2.475GHz	< 21dB
2.475GHz - 4.125GHz	< 30dB
Differential Impedance	
Connection point and transition area: Up to 1nsec**	100 ohms ±15%
Cable area: 1nsec – 2.5nsec:**	100 ohms ±10%

** Measurement point for TDR measurement of impedance.

4.2.7 +5V Power Signal

The HDMI connector provides a pin allowing the Source to supply +5.0 Volts to the cable and Sink. All HDMI Sources shall assert the +5V Power signal whenever the Source is using the DDC, CEC, or TMDS signals. All HDMI Sources shall be able to supply a minimum of 55 mA to the +5V Power pin.

A Sink shall not draw more than 50 mA of current from the +5V Power pin. When the Sink is powered on, it can draw no more than 10mA of current from the +5V Power signal.

The return for the +5V Power signal is DDC/CEC Ground signal.

An HDMI Source shall have +5V Power signal over-current protection of no more than 0.5A.

Table 4-19 Power Pin Voltage

Item	Min	Max
TP1 voltage	4.95 Volts	5.05 Volts
TP2 voltage	4.80 Volts	5.20 Volts

IPR2024-001429
HP – EX1010, Page 49 of 193

4.2.8 DDC

The Display Data Channel (DDC) I/Os and wires (SDA, SCL, DDC/CEC Ground), shall meet the requirements specified in the I^2C-bus Specification, version 2.1, Section 15 for "Standard-Mode" devices. Note that the discussions of high capacitance environments in the I^2C-bus Specification, section 17.2, "Switched pull-up circuit for Fast-mode I2C-bus", may be applied to the HDMI environment as well.

In the capacitance measurement, the DDC line ground (DDC/CEC Ground) shall be separated from the frame ground of the equipment. The exact method and measurement procedure is written in HDMI Compliance Test Specification. In some cases buffers, or I^2C "accelerators", may be inserted in the cable as long as all I^2C timing requirements are met.

Table 4-20 Maximum Capacitance of DDC line

Item	HDMI Source	Cable Assembly	HDMI Sink
SDA – DDC/CEC Ground	50pF	700pF	50pF
SCL – DDC/CEC Ground	50pF	700pF	50pF

Table 4-21 Pull-up Resistance on DDC Lines

Item	Value
Source Pull-up resistors for SCL and SDA signals	minimum 1.5k ohms, maximum 2.0k ohms
Sink Pull-up resistors for SCL signal	47k ohms, ±10%

4.2.9 Hot Plug Detect Signal (HPD)

The ground reference for the Hot Plug Detect signal is the DDC/CEC Ground pin.

Table 4-22 Required Output Characteristics of Hot Plug Detect Signal

Item	Value
High voltage level (Sink)	Minimum 2.4 Volts, Maximum 5.05 Volts
Low voltage level (Sink)	Minimum 0 Volts, Maximum 0.4 Volts
Output resistance	1000 ohms ±20%

IPR2024-001429
HP – EX1010, Page 50 of 193

Table 4-23 Required Detection Levels for Hot Plug Detect Signal

Item	Value
High voltage level (Source)	Minimum 2.0 Volts, Maximum 5.05 Volts
Low voltage level (Source)	Minimum 0 Volts, Maximum 0.8 Volts

4.2.10 CEC Line

The following line characteristics are required for all products, including those that do not implement the CEC protocol. Further requirements for those devices which implement the CEC protocol are given in Supplement 1. The ground reference for the CEC signal is the DDC/CEC Ground signal.

Table 4-24 CEC line Electrical Specifications for all Configurations

Item	Rule / Description	Value
Line connectivity	In general, CEC lines from all HDMI inputs (if present) and a single HDMI output (if present) shall be interconnected. However, the following exceptions are allowed: A device which has no HDMI output is allowed to have separate CEC lines for each HDMI connector if that device takes a logical address of 0 on each CEC line. Due to the complexity of handling multiple active CEC lines, this is discouraged. A TV that is acting as the root shall not connect the CEC line to any HDMI output.	
Power-off characteristics	A device with power removed must not degrade communication between other CEC devices (e.g. the line must not be pulled down by the powered off device).	
Leakage current in standby/off	Maximum CEC line leakage current	1.8μA
CEC Line Capacitance	Maximum capacitance load of a device (excluding cable)	100pF
	Maximum capacitance load of a Cable Assembly	700pF

4.2.11 Robustness Requirements

No damage to the HDMI Source or Sink can result from the shorting of any combination of signals on any connector. If two HDMI Sources are connected together with a single cable, no damage can occur to either of the Sources. If two HDMI Sinks are connected together with a single cable, no damage can occur to either of the Sinks.

IPR2024-001429
HP – EX1010, Page 51 of 193

5 Signaling And Encoding

5.1 Overview

5.1.1 Link Architecture

As shown in Figure 5-1, an HDMI link includes three TMDS Data channels and a single TMDS Clock channel. The TMDS Clock channel constantly runs at the pixel rate of the transmitted video. During every cycle of the TMDS Clock channel, each of the three TMDS data channels transmits a 10-bit character. This 10-bit word is encoded using one of several different coding techniques.

The input stream to the Source's encoding logic will contain video pixel, packet and control data. The packet data consists of audio and auxiliary data and associated error correction codes.

These data items are processed in a variety of ways and are presented to the TMDS encoder as either 2 bits of control data, 4 bits of packet data or 8 bits of video data per TMDS channel. The Source encodes one of these data types or encodes a Guard Band character on any given clock cycle.

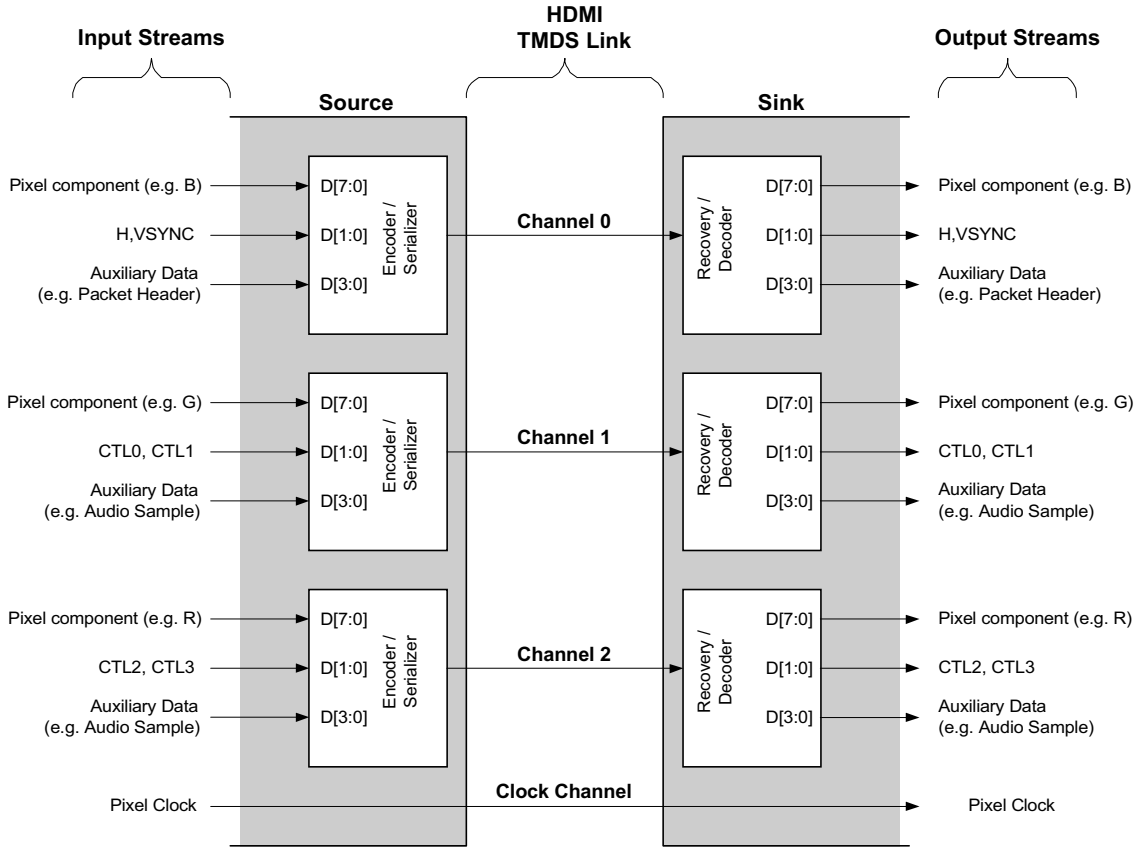

Figure 5-1 HDMI Encoder/Decoder Overview

IPR2024-001429
HP – EX1010, Page 52 of 193

5.1.2 Operating Modes Overview

The HDMI link operates in one of three modes: Video Data Period, Data Island period, and Control period. During the Video Data Period, the active pixels of an active video line are transmitted. During the Data Island period, audio and auxiliary data are transmitted using a series of packets. The Control period is used when no video, audio, or auxiliary data needs to be transmitted. A Control Period is required between any other two periods.

An example of each period placement is shown in the following figure.

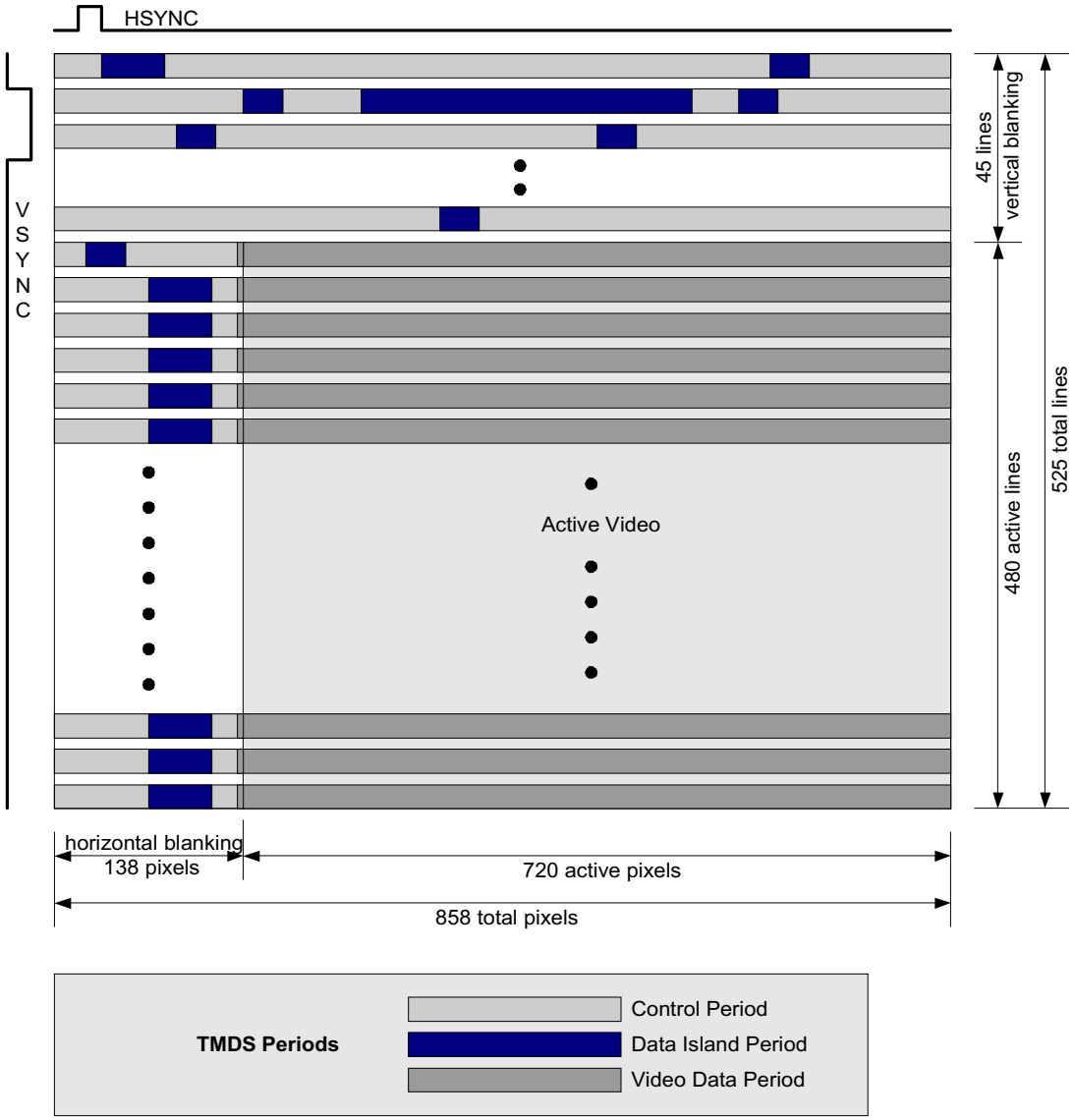

Figure 5-2 Informative Example: TMDS periods in 720x480p video frame

IPR2024-001429
HP – EX1010, Page 53 of 193

Video Data Periods use transition minimized coding to encode 8 bits per channel, or 24 bits total per pixel.

Data Island Periods are encoded using a similar transition minimized coding, TMDS Error Reduction Coding (TERC4), which transmits 4 bits per channel, or 12 bits total per pixel clock period.

During Control Periods, 2 bits per channel, or 6 bits total are encoded per pixel clock using a transition maximized encoding. These 6 bits are HSYNC, VSYNC, CTL0, CTL1, CTL2 and CTL3. Near the end of every Control Period, a Preamble, using the CTLx bits, indicates whether the next Data Period is a Video Data Period or a Data Island Period.

Each Video Data Period and Data Island Period starts with a Leading Guard Band designed to provide robust determination of the transition from the Control Period to the Data Period. This Leading Guard Band consists of two special characters.

The Data Island Period is also protected by a Trailing Guard Band which is designed to provide a robust determination of the transition to Control Period.

The following table shows Encoding type used and data transmitted during each operating mode.

Table 5-1 Encoding Type and Data Transmitted

Period	Data Transmitted	Encoding Type
Video Data	Video Pixels	Video Data Coding (8 bits converted to 10 bits)
	(Guard Band)	(Fixed 10 bit pattern)
Data Island	Packet Data - Audio Samples - InfoFrames HSYNC, VSYNC	TERC4 Coding (4 bits converted to 10 bits)
	(Guard Band)	(Fixed 10 bit pattern)
Control	Control - Preamble - HSYNC, VSYNC	Control Period Coding (2 bits converted to 10 bits)

5.2 Operating Modes

5.2.1 Control Period

Control Period is used for transmission of the Preamble. The Control Period is also used by the Sink for character synchronization.

IPR2024-001429
HP – EX1010, Page 54 of 193

5.2.1.1 Preamble

Immediately preceding each Video Data Period or Data Island Period is the Preamble. This is a sequence of eight identical Control characters that indicate whether the upcoming data period is a Video Data Period or is a Data Island. The values of CTL0, CTL1, CTL2, and CTL3 indicate the type of data period that follows. The remaining Control signals, HSYNC and VSYNC, may vary during this sequence.

There are only two legal Preamble characters:

Table 5-2 Preambles for Each Data Period Type

CTL0	CTL1	CTL2	CTL3	Data Period Type
1	0	0	0	Video Data Period
1	0	1	0	Data Island Period

The Video Data Period type indicates that the following data period contains video data, beginning with a Video Guard Band.

The Data Island type indicates that the following data period is an HDMI compliant Data Island, beginning with a Data Island Guard Band.

The transition from TMDS control characters to Guard Band characters following this sequence identifies the start of the Data Period.

5.2.1.2 Character Synchronization

The TMDS Sink needs to determine the location of character boundaries in the serial data streams. Once character boundaries are established on all data channels, the Sink is defined to be synchronized to the serial streams, and may recover TMDS characters from the data channels for decode. The TMDS data stream provides periodic cues for decoder synchronization.

The TMDS characters used during the Video Data Period and Data Island Period contain five or fewer transitions, while the TMDS characters used during the Control Period contain seven or more transitions. The high-transition content of the characters transmitted during the Control Period form the basis for character boundary synchronization at the decoder. While these characters are not individually unique in the serial data stream, they are sufficiently alike that the decoder may uniquely detect the presence of a succession of them during transmitted synchronization intervals. The exact algorithm for this detection is an implementation detail beyond the scope of this document, but minimum conditions for Sink synchronization are defined.

The Sink is required to establish synchronization with the data stream during any Control Period greater than or equal to $t_{S,min}$ (12) characters in length.

The Source is also required to occasionally transmit an Extended Control Period per Table 5-4.

IPR2024-001429
HP – EX1010, Page 55 of 193

Table 5-3 TMDS Link Timing Parameters

Symbol	Description	Value	Unit
$t_{S,min}$	Minimum duration Control Period	12	T_{PIXEL}

Table 5-4 Extended Control Period Parameters

Symbol	Description	Value	Unit
t_{EXTS,max_delay}	Maximum time between Extended Control Periods	50	msec
$t_{EXTS,min}$	Minimum duration Extended Control Period	32	T_{PIXEL}

5.2.2 Video Data Period

Video data periods are used to carry the pixels of an active video line.

Each Video Data Period is preceded by a Preamble, described above.

Following the Preamble, the Video Data Period begins with a two pixel Video Leading Guard Band. There is no Trailing Guard Band for the Video Data Period.

During active video periods, 24 bits of pixel data are encoded using TMDS transition minimized encoding.

5.2.2.1 Video Guard Band

Table 5-5 Video Leading Guard Band Values

```
case (TMDS Channel Number):
       0:  q_out[9:0] = 0b1011001100;
       1:  q_out[9:0] = 0b0100110011;
       2:  q_out[9:0] = 0b1011001100;
endcase
```

5.2.3 Data Island Period

5.2.3.1 Data Island Overview

Data Islands are used to carry packets of audio sample data and auxiliary data. This auxiliary data includes EIA/CEA-861B InfoFrames and other data describing the active audio or video stream or describing the Source.

Each Data Island is preceded by a Preamble, described above.

Following the Preamble, each Island starts with a Leading Guard Band. The first packet of the Data Island then follows.

IPR2024-001429
HP – EX1010, Page 56 of 193

During every pixel of the Data Island, including the Guard Band, bits 0 and 1 of TMDS Channel 0 transmit an encoded form of HSYNC and VSYNC.

Bit 2 of TMDS Channel 0 is used to transmit the Packet Header. All four bits of TMDS Channels 1 and 2 are used for the Packet data as shown in Figure 5-3. Each packet is 32 pixels long and is protected by BCH ECC for error correction and detection purposes.

During the Data Island, each of the three TMDS channels transmits a series of 10-bit characters encoded from a 4-bit input word, using TMDS Error Reduction Coding (TERC4). TERC4 significantly reduces the error rate on the link by choosing only 10-bit codes with high inherent error avoidance.

The last two characters of the Data Island, following the last packet, is the Trailing Guard Band.

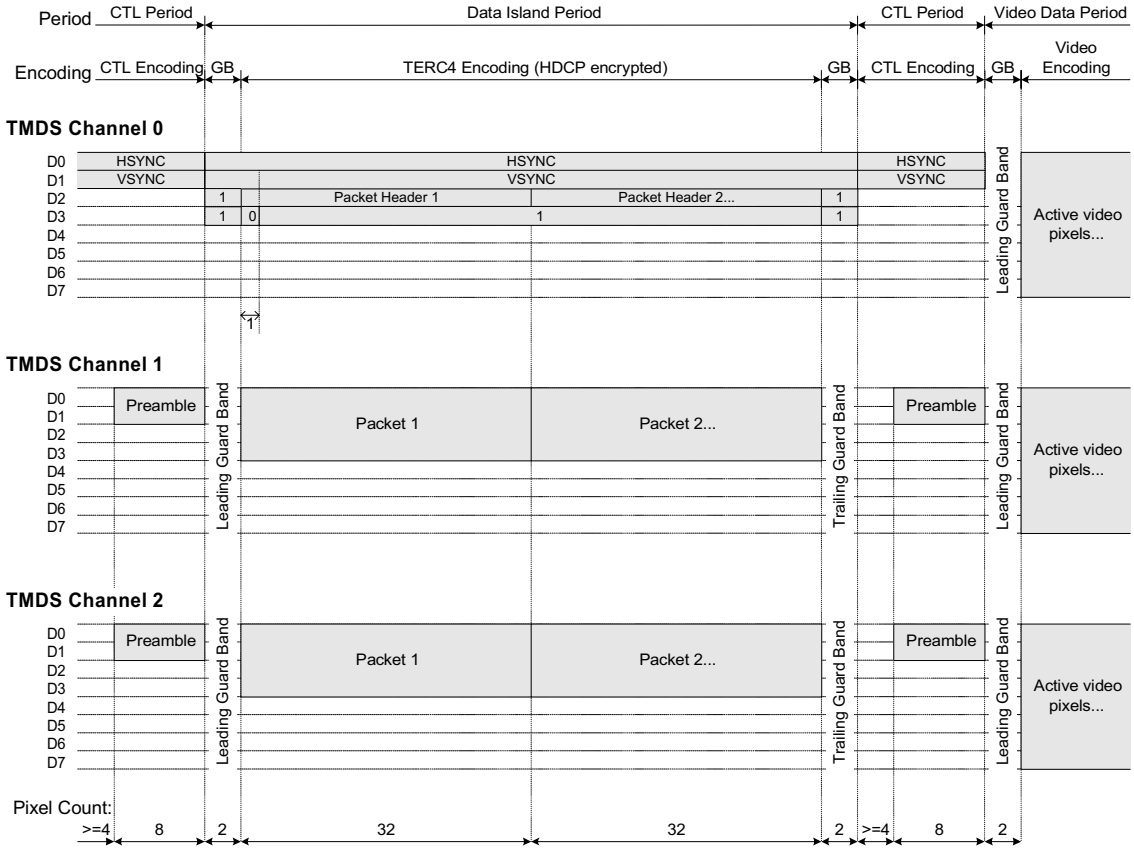

Figure 5-3 TMDS Periods and Encoding

Following the Data Island, all three channels revert to transmitting control characters.

5.2.3.2 Island Placement and Duration

The Source is required to determine the temporal placement and duration of the Data Island with respect to the video signal's horizontal and vertical blanking periods and synchronization signals. It shall do so following the rules stated below.

All TMDS Control Periods shall be at least $t_{S,min}$ (12) characters (pixels) long.

IPR2024-001429
HP – EX1010, Page 57 of 193

The Data Island shall contain at least one packet, limiting its minimum size to 36 pixels.

Islands shall contain an integer number of packets. In order to assure the reliability of the data within the Data Island, they shall be limited to 18 packets or fewer.

Zero, one or more Data Islands can occur between subsequent video data periods.

While transmitting video, at least one Data Island shall be transmitted during every two video fields.

5.2.3.3 Data Island Guard Bands

The first two data characters within the Data Island are the Leading Guard Band. The last two data characters within the Data Island are the Trailing Guard Band.

During the Data Island Guard Bands, Channel 0 is encoded as one of four TERC4 values. These TERC4 values (D[3:0]) are 0xC, 0xD, 0xE and 0xF, depending upon the values of HSYNC and VSYNC.

Table 5-6 Data Island Leading and Trailing Guard Band Values

```
case (TMDS Channel Number):
       0:  q_out[9:0] = n.a.;
       1:  q_out[9:0] = 0b0100110011;
       2:  q_out[9:0] = 0b0100110011;
endcase
```

5.2.3.4 Data Island Packet Construction

All data within a Data Island is contained within 32 pixel Packets. Packets consist of a Packet Header, a Packet Body (consisting of four Subpackets), and associated error correction bits. Each Subpacket includes 56 bits of data and is protected by an additional 8 bits of BCH ECC parity bits.

Subpacket 0 plus its corresponding parity bits make up BCH Block 0. This block is mapped onto bit 0 of both Channel 1 and Channel 2. In this way, the 64 bits of BCH Block 0 are transferred over the course of 32 pixels. Likewise, BCH Block 1 (Subpacket 1 plus parity) is mapped onto bit 1 of both Channels 1 and 2.

In the tables below, Header bytes are indicated as HB0, HB1, and HB2 and Subpacket bytes are indicated as SB0 to SB6.

Subpacket 0 bytes 0 through 6 (SB0-SB6) are also designated Packet bytes 0 to 6 (PB0-PB6).

Subpacket 1 bytes 0 through 6 (SB0-SB6) are also designated Packet bytes 7 to 13 (PB7-PB13).

Subpacket 2 bytes 0 through 6 (SB0-SB6) are also designated Packet bytes 14 to 20 (PB14-PB20).

Subpacket 3 bytes 0 through 6 (SB0-SB6) are also designated Packet bytes 21 to 27 (PB21-PB27).

This is illustrated in Figure 5-4.

IPR2024-001429
HP – EX1010, Page 58 of 193

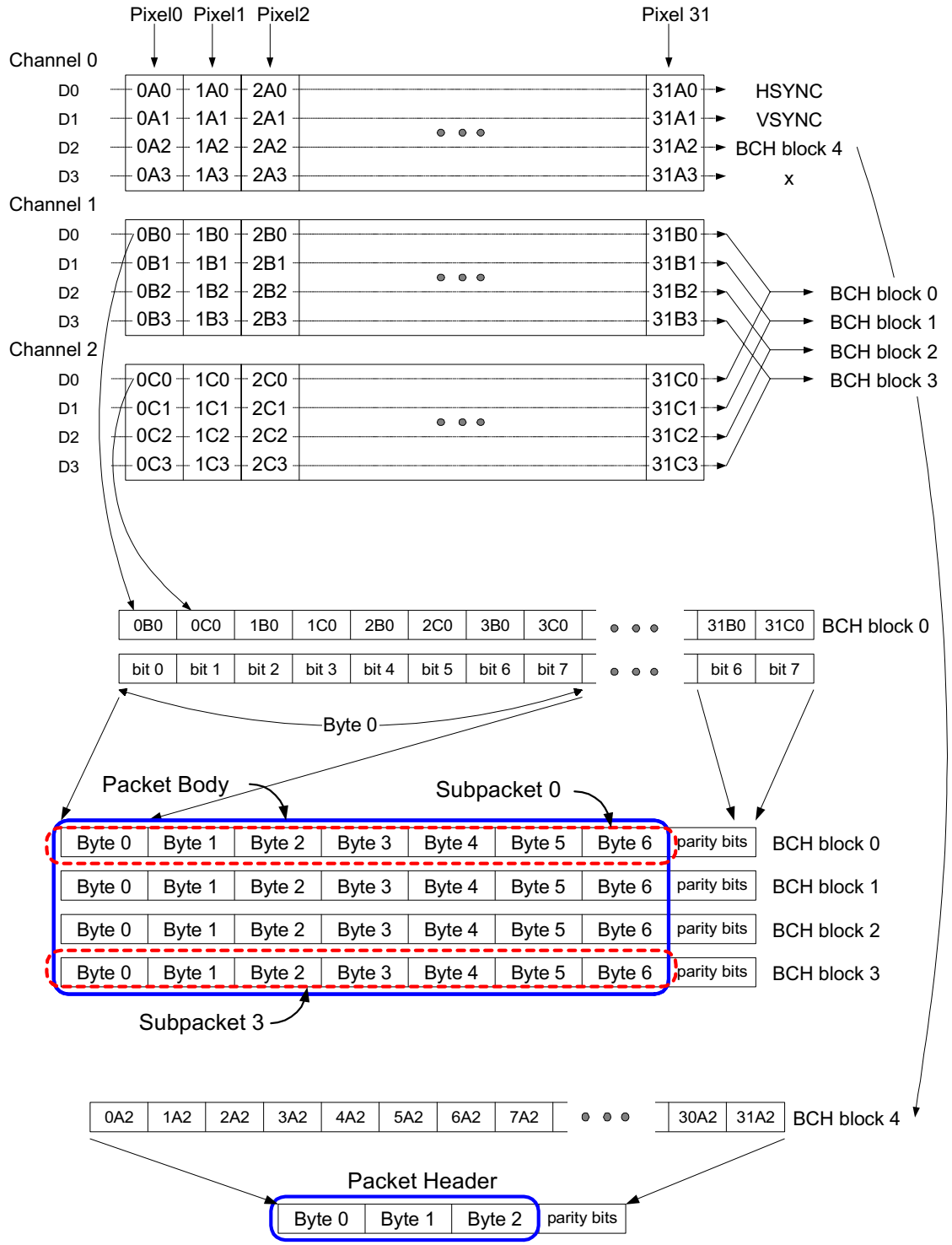

Figure 5-4 Data Island Packet and ECC Structure

IPR2024-001429
HP – EX1010, Page 59 of 193

5.2.3.5 Data Island Error Correction

To improve the reliability of the data and to improve the detection of bad data, Error Correction Code (ECC) parity is added to each packet. BCH(64,56) and BCH(32,24) are generated by the polynomial G(x) shown in Figure 5-5.

$G(x)=1+x^6+x^7+x^8$ (127 count repetition cycle).

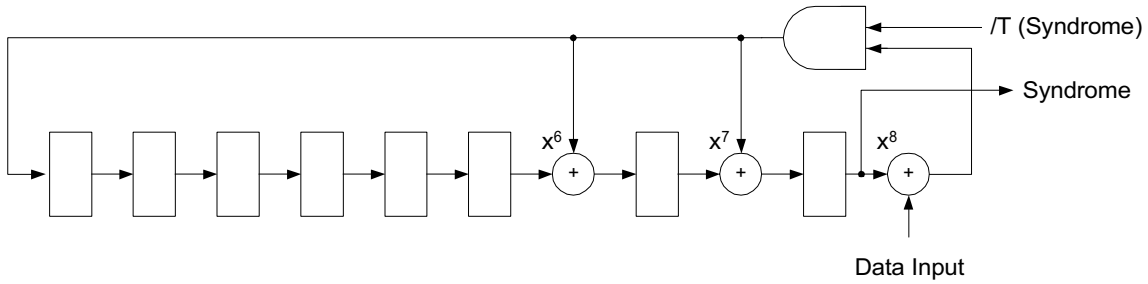

Figure 5-5 Error Correction Code generator

5.3 Data Island Packet Definitions

5.3.1 Packet Header

Packet Headers contain 24 data bits with an additional 8 bits of BCH(32,24) ECC parity. These parity bits are calculated over the 24 bits of the Packet Header.

A Packet Header includes an 8-bit Packet Type and 16 bits of packet-specific data.

Table 5-7 Packet Header

Byte \ Bit #	7	6	5	4	3	2	1	0
HB0	Packet Type							
HB1	packet-specific data							
HB2	packet-specific data							

Table 5-8 shows the available packet types.

IPR2024-001429
HP – EX1010, Page 60 of 193

Table 5-8 Packet Types

Packet Type Value	Packet Type
0x00	Null
0x01	Audio Clock Regeneration (N/CTS)
0x02	Audio Sample
0x80+InfoFrame Type	EIA/CEA-861B InfoFrame

5.3.2 Null Packet

Null packets can be used by the Source anytime. All bytes of a Null packet are undefined and shall contain only zero values. An HDMI Sink shall ignore bytes HB1 and HB2 of the Null Packet Header and all bytes of the Null Packet Body.

Table 5-9 Null Packet Header

Byte \ Bit #	7	6	5	4	3	2	1	0
HB0	0	0	0	0	0	0	0	0
HB1	0	0	0	0	0	0	0	0
HB2	0	0	0	0	0	0	0	0

5.3.3 Audio Clock Regeneration Packet

Audio Clock Regeneration Packets contain both the N and CTS values used in the Audio Clock Regeneration process. The four Subpackets each contain the same Audio Clock Regeneration Subpacket. An HDMI Sink shall ignore bytes HB1 and HB2 of the Audio Clock Regeneration Packet header.

Table 5-10 Audio Clock Regeneration Packet Header

Byte \ Bit #	7	6	5	4	3	2	1	0
HB0	0	0	0	0	0	0	0	1
HB1	0	0	0	0	0	0	0	0
HB2	0	0	0	0	0	0	0	0

IPR2024-001429
HP – EX1010, Page 61 of 193

Table 5-11 Audio Clock Regeneration Subpacket

Byte \ Bit #	7	6	5	4	3	2	1	0
SB0	0	0	0	0	0	0	0	0
SB1	0	0	0	0	CTS.19	-	-	CTS.16
SB2	CTS.15	-	-	-	-	-	-	CTS.8
SB3	CTS.7	-	-	-	-	-	-	CTS.0
SB4	0	0	0	0	N.19	-	-	N.16
SB5	N.15	-	-	-	-	-	-	N.8
SB6	N.7	-	-	-	-	-	-	N.0

- N: value of audio clock regeneration “N” [20 bits]
- CTS: Cycle Time Stamp [20 bits]

CTS values of zero are used to indicate no new value of CTS.

5.3.4 Audio Sample Packet

Audio Sample Packets consist of one to four Audio Samples. These may be different samples or different partial samples (i.e. 2 of 6 channels). The configuration of the Subpackets is determined by the layout and sample_present bits in the header. This is described in detail in Section 7.6, *Audio Data Packetization*.

Table 5-12 Audio Sample Packet Header

Byte \ Bit #	7	6	5	4	3	2	1	0
HB0	0	0	0	0	0	0	1	0
HB1	0	0	0	layout	sample_ present.sp3	sample_ present.sp2	sample_ present.sp1	sample_ present.sp0
HB2	B.3	B.2	B.1	B.0	sample_flat. sp3	sample_flat .sp2	sample_flat. sp1	sample_flat .sp0

- layout: indicates which of two possible Subpacket/audio sample layouts are used. See Section 7.6, *Audio Data Packetization*.
- sample_present.spX: indicates if Subpacket X contains an audio sample.
- sample_flat.spX: indicates if Subpacket X represents a “flatline” sample. Only valid if “sample_present.spX” is set.
- B.X: =1 if Subpacket X contains the first frame in an IEC 60958 block; = 0 otherwise

IPR2024-001429
HP – EX1010, Page 62 of 193

Table 5-13 Audio Sample Subpacket

Byte \ Bit #	7	6	5	4	3	2	1	0
SB0	L.11	…	…	…	…	…	…	L.4
SB1	L.19	…	…	…	…	…	…	L.12
SB2	L.27	…	…	…	…	…	…	L.20
SB3	R.11	…	…					R.4
SB4	R.19	…	…	…	…	…	…	R.12
SB5	R.27	…	…	…	…	…	…	R.20
SB6	P_R	C_R	U_R	V_R	P_L	C_L	U_L	V_L

- L.X: Bit corresponding to Time Slot X from first ("left") sub-frame per IEC 60958-1, page 15
- R.X: Bit corresponding to Time Slot X from second ("right") sub-frame per IEC 60958-1, page 15
- V_L: Valid bit from first sub-frame
- V_R: Valid bit from second sub-frame
- U_L: User Data bit from first sub-frame
- U_R: User Data bit from second sub-frame
- C_L: Channel Status bit from first sub-frame
- C_R: Channel Status bit from second sub-frame
- P_L: Parity bit from first sub-frame (even parity)
- P_R: Parity bit from second sub-frame (even parity)

5.3.5 InfoFrame Packet

EIA/CEA-861B InfoFrames are carried across HDMI using the HDMI InfoFrame packet, with the following restrictions.

- Each InfoFrame shall be 30 bytes or less, including the Type Code (Packet Type), Version number and InfoFrame length fields.
- InfoFrame Type Codes shall be within the range of 0 to 127.
- Only InfoFrames defined in EIA/CEA-861B or in this specification may be transmitted.

InfoFrames are each carried in their own packet, as shown below.

IPR2024-001429
HP – EX1010, Page 63 of 193

Table 5-14 InfoFrame Packet Header

Byte \ Bit #	7	6	5	4	3	2	1	0
HB0	1	InfoFrame Type						
HB1	InfoFrame_version							
HB2	0	0	0	InfoFrame_length				

- InfoFrame Type: lower 7 bits of the InfoFrame type code as per EIA/CEA-861B.
- InfoFrame_version: version number of InfoFrame as per EIA/CEA-861B.
- InfoFrame_length: InfoFrame length in bytes as per EIA/CEA-861B. This length does not include any of the bytes in the Packet Header nor the checksum byte. The maximum value for this field is 27 (0x1B).

Table 5-15 InfoFrame Packet Contents

Byte \ Bit #	7	6	5	4	3	2	1	0
PB0	checksum							
PB1	Data Byte 1							
PB2	Data Byte 2							
PB3…PB26	…							
PB27	Data Byte 27							

- checksum: Checksum of the InfoFrame. The checksum shall be calculated such that a byte-wide sum of all three bytes of the Packet Header and all valid bytes of the InfoFrame Packet contents (determined by InfoFrame_length), plus the checksum itself, equals zero.
- Data Byte x: Data Byte X of the InfoFrame as defined in EIA/CEA-861B.

5.3.6 General Control Packet

The General Control packet header contains no data. Bytes HB1 and HB2 shall be ignored by the Sink. The General Control packet body shall contain four identical subpackets, defined in Table 5-17, below. The General Control packet may only be transmitted between the active edge of VSYNC and 384 pixels following this edge.

IPR2024-001429
HP – EX1010, Page 64 of 193

Table 5-16 General Control Packet Header

Byte \ Bit #	7	6	5	4	3	2	1	0
HB0	0	0	0	0	0	0	1	1
HB1	0	0	0	0	0	0	0	0
HB2	0	0	0	0	0	0	0	0

Table 5-17 General Control Subpacket

Byte \ Bit #	7	6	5	4	3	2	1	0
SB0	0	0	0	Clear_AVMUTE	0	0	0	Set_AVMUTE
SB1	0	0	0	0	0	0	0	0
SB2	0	0	0	0	0	0	0	0
SB3	0	0	0	0	0	0	0	0
SB4	0	0	0	0	0	0	0	0
SB5	0	0	0	0	0	0	0	0
SB6	0	0	0	0	0	0	0	0

- Set_AVMUTE: Set the AVMUTE flag. (See description below).
- Clear_AVMUTE: Clear the AVMUTE flag. (See description below).

A Source may not send a General Control Packet with the Clear_AVMUTE and Set_AVMUTE flags set simultaneously.

Source transmission of the General Control Packet is optional. Sinks may optionally interpret General Control Packet contents. Sinks shall be capable of receiving any General Control Packet.

The General Control packet's Set_AVMUTE and Clr_AVMUTE flags may be used by a Source to reduce the negative impact on the Sink of TMDS clock changes or interruptions. Use of the AVMUTE function may prevent spurious pops or noises in the audio during these clock changes.

When AVMUTE is set, the Sink may assume that no valid audio or video data is being received. The Sink may optionally apply a mute function to the audio data and/or a blank function to the video.

5.4 Encoding

5.4.1 Serialization

The stream of TMDS characters produced by the encoder is serialized for transmission on the TMDS data channel. In the discussions that follow, the least significant bit of each character (q_out[0]) is the first bit to be transmitted and the most significant bit (q_out[9]) is the last.

IPR2024-001429
HP – EX1010, Page 65 of 193

5.4.2 Control Period Coding

Each TMDS channel has two control signals which are encoded into 10 bits during Control Periods. For each of the three channels these signals are shown in Table 5-18.

Table 5-18 Control-signal Assignment

TMDS Channel	D0	D1
0	HSYNC	VSYNC
1	CTL0	CTL1
2	CTL2	CTL3

The two Control signals for each of the three TMDS channels are encoded as follows:

```
case (D1, D0):
       0, 0:  q_out[9:0] = 0b1101010100;
       0, 1:  q_out[9:0] = 0b0010101011;
       1, 0:  q_out[9:0] = 0b0101010100;
       1, 1:  q_out[9:0] = 0b1010101011;
endcase;
```

5.4.3 TERC4 Coding

TMDS Error Reduction Coding (TERC4) is used during the Data Island period to encode 4 bits per channel into the 10 bits serialized and transmitted.

```
case (D3, D2, D1, D0):
    0000:  q_out[9:0] = 0b1010011100;
    0001:  q_out[9:0] = 0b1001100011;
    0010:  q_out[9:0] = 0b1011100100;
    0011:  q_out[9:0] = 0b1011100010;
    0100:  q_out[9:0] = 0b0101110001;
    0101:  q_out[9:0] = 0b0100011110;
    0110:  q_out[9:0] = 0b0110001110;
    0111:  q_out[9:0] = 0b0100111100;
    1000:  q_out[9:0] = 0b1011001100;
    1001:  q_out[9:0] = 0b0100111001;
    1010:  q_out[9:0] = 0b0110011100;
    1011:  q_out[9:0] = 0b1011000110;
    1100:  q_out[9:0] = 0b1010001110;
    1101:  q_out[9:0] = 0b1001110001;
    1110:  q_out[9:0] = 0b0101100011;
    1111:  q_out[9:0] = 0b1011000011;
endcase;
```


IPR2024-001429
HP – EX1010, Page 66 of 193

5.4.4 Video Data Coding

5.4.4.1 Video Data Encoding

The following is a description of the encoding algorithm used during transmission of video data. A detailed description of an encoder is given. Other implementations are possible and are permitted but, given the same sequence of input characters, they are required to produce the same sequence of output (10-bit) characters that is generated by the described encoder.

During video data, where each 10-bit character represents 8 bits of pixel data, the encoded characters provide an approximate DC balance as well as a reduction in the number of transitions in the data stream. The encode process for the active data period can be viewed in two stages. The first stage produces a transition-minimized 9-bit code word from the input 8 bits. The second stage produces a 10-bit code word, the finished TMDS character, which will manage the overall DC balance of the transmitted stream of characters.

The 9-bit code word produced by the first stage of the encoder is made up of an 8-bit representation of the transitions found in the input 8 bits, plus a one-bit flag to indicate which of two methods was used to describe the transitions. In both cases the LSb of the output matches the LSb of the input. With a starting value established, the remaining 7 bits of the output word is derived from sequential exclusive OR (XOR) or exclusive NOR (XNOR) functions of each bit of the input with the previously derived bit. The choice between XOR and XNOR logic is made such that the encoded values contain the fewest possible transitions, and the ninth bit of the code word is used to indicate whether XOR or XNOR functions were used to derive the output code word. The decode of this 9-bit code word is simply a matter of applying either XOR or XNOR gates to the adjacent bits of the code, with the LSb passing from decoder input to decoder output unchanged.

The second stage of the encoder performs an approximate DC balance on the transmitted stream by selectively inverting the 8 data bits of the 9-bit code words produced by the first stage. A tenth bit is added to the code word, to indicate when the inversion has been made. The encoder determines when to invert the next character based on the running disparity between ones and zeros that it tracks in the transmitted stream, and the number of ones and zeros found in the current code word. If too many ones have been transmitted and the input contains more ones than zeros, the code word is inverted. This dynamic encoding decision at the Source is simply decoded at the Sink by the conditional inversion of the input code word based on the tenth bit of the TMDS character. The TMDS code mapping is specified by Figure 5-6 with the definitions of Table 5-19. The encoder produces one of 460 unique 10-bit characters. The encoder shall not generate any other 10-bit character during a Video Data Period.

Upon entering a Video Data Period, the data stream disparity (cnt) shall be considered to be zero by the encoder.

IPR2024-001429
HP – EX1010, Page 67 of 193

Table 5-19 Encoding Algorithm Definitions

D	The encoder input data set. D is 8-bit pixel data
cnt	This is a register used to keep track of the data stream disparity. A positive value represents the excess number of “1”s that have been transmitted. A negative value represents the excess number of “0”s that have been transmitted. The expression cnt{t-1} indicates the previous value of the disparity for the previous set of input data. The expression cnt(t) indicates the new disparity setting for the current set of input data.
q_m	Intermediate value.
q_out	These 10 bits are the encoded output value.
N_1\{x\}	This operator returns the number of “1”s in argument “x”
N_0\{x\}	This operator returns the number of “0”s in argument “x”

IPR2024-001429
HP – EX1010, Page 68 of 193

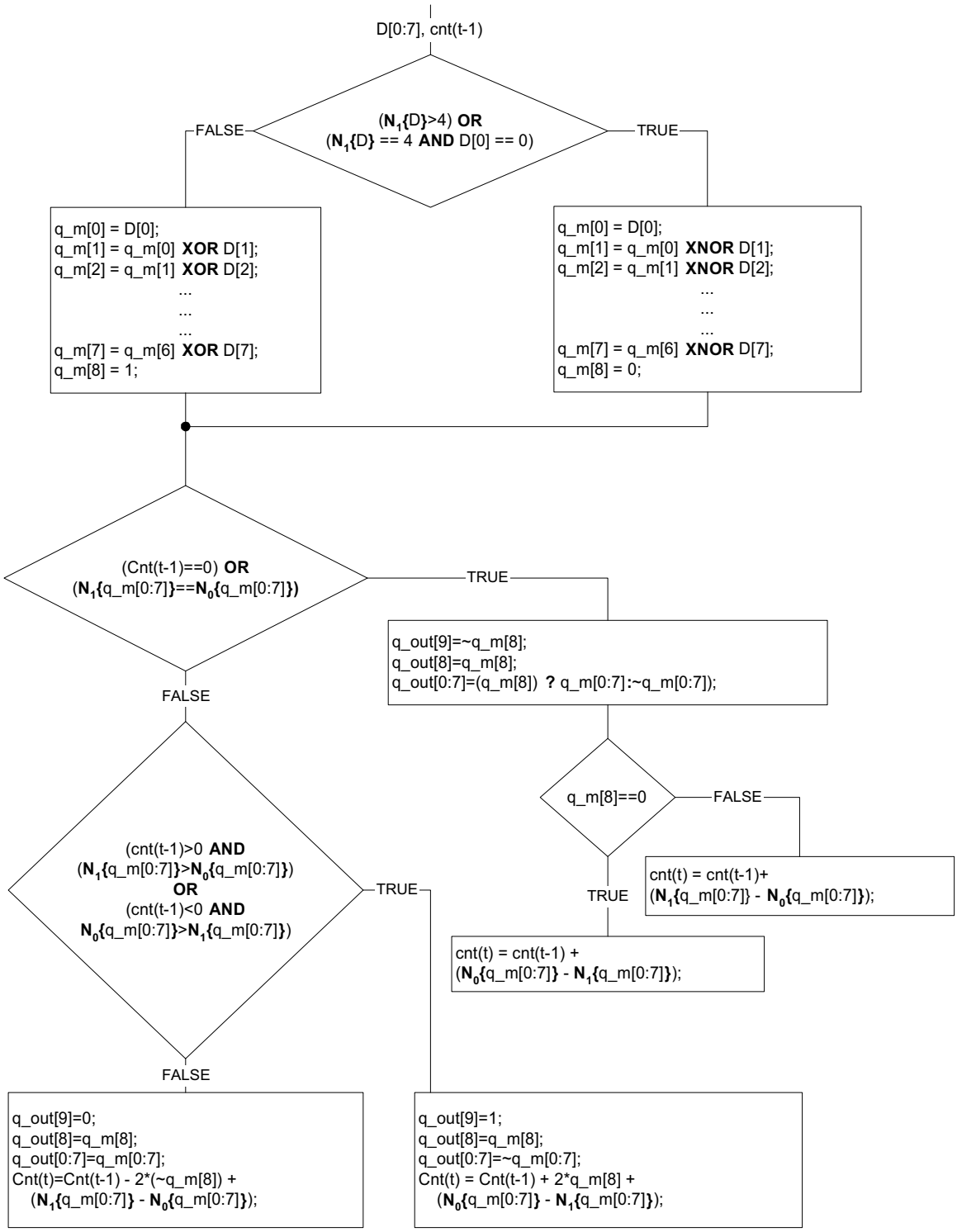

Figure 5-6 TMDS Video Data Encode Algorithm

IPR2024-001429
HP – EX1010, Page 69 of 193

5.4.4.2 Video Data Decoding

The TMDS decode mapping is specified by Figure 5-7. Alternative implementations are possible but, given the same input data stream, they are required to generate the same output data stream as the described decoder algorithm.

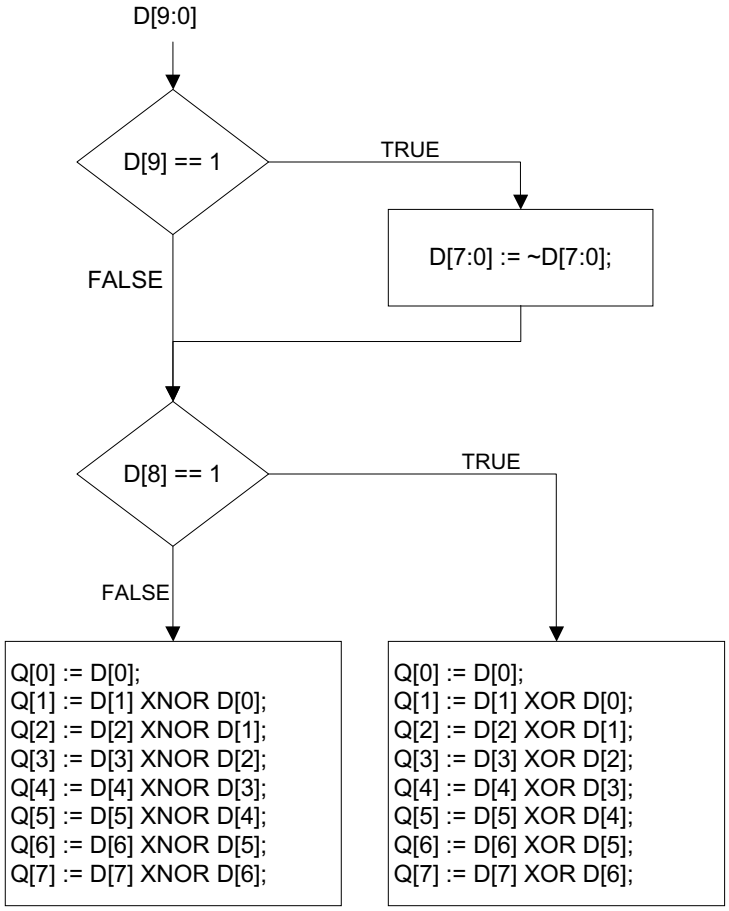

Figure 5-7 TMDS Video Decode Algorithm

IPR2024-001429
HP – EX1010, Page 70 of 193

6 Video

6.1 Overview

HDMI allows a wide variety of explicitly defined video format timings to be transmitted and displayed. These video format timings define the pixel and line counts and timing, synchronization pulse position and duration, and whether the format is interlaced or progressive.

The video pixels carried across the link shall be in one of three different pixel encodings: RGB 4:4:4, YC_BC_R 4:4:4 or YC_BC_R 4:2:2.

The HDMI Source determines the pixel encoding and video format of the transmitted signal based on the characteristics of the source video, the format and pixel encoding conversions possible at the Source, and the format and pixel encoding capabilities and preferences of the Sink.

6.2 Video Format Support

In order to provide maximum compatibility between video Sources and Sinks, specific minimum requirements have been specified for Sources and Sinks.

6.2.1 Format Support Requirements

Some of the following support requirements are in addition to those specified in EIA/CEA-861B.

- An HDMI Source shall support at least one of the following video format timings:
  - 640x480p @ 59.94/60Hz
  - 720x480p @ 59.94/60Hz
  - 720x576p @ 50Hz
- An HDMI Source that is capable of transmitting any of the following video format timings using any other component analog or uncompressed digital video output, shall be capable of transmitting that video format timing across the HDMI interface.
  - 1280x720p @ 59.94/60Hz
  - 1920x1080i @ 59.94/60Hz
  - 720x480p @ 59.94/60Hz
  - 1280x720p @ 50Hz
  - 1920x1080i @ 50Hz
  - 720x576p @ 50Hz
- An HDMI Sink which accepts 60Hz video formats shall support the 640x480p @ 59.94/60Hz and 720x480p @ 59.94/60Hz video format timings.
- An HDMI Sink which accepts 50Hz video formats shall support the 640x480p @ 59.94/60Hz and 720x576p @ 50Hz video format timings.
- An HDMI Sink which accepts 60Hz video formats, and which supports HDTV capability, shall support 1280x720p @ 59.94/60Hz or 1920x1080i @ 59.94/60Hz video format timings.
- An HDMI Sink which accepts 50Hz video formats, and which supports HDTV capability, shall support 1280x720p @ 50Hz or 1920x1080i @ 50Hz video format timings.

IPR2024-001429
HP – EX1010, Page 71 of 193

- An HDMI Sink that is capable of receiving any of the following video format timings using any other component analog or uncompressed digital video input, shall be capable of receiving that format across the HDMI interface.
  - 1280x720p @ 59.94/60Hz
  - 1920x1080i @ 59.94/60Hz
  - 1280x720p @ 50Hz
  - 1920x1080i @ 50Hz

6.2.2 Video Control Signals : HSYNC, VSYNC

During the Data Island period, HDMI carries HSYNC and VSYNC signals using encoded bits on Channel 0. During Video Data periods, HDMI does not carry HSYNC and VSYNC and the Sink should assume that these signals remain constant. During Control periods, HDMI carries HSYNC and VSYNC signals through the use of four different control characters on TMDS Channel 0.

6.2.3 Pixel Encoding Requirements

Only pixel encodings of RGB 4:4:4, YC_BC_R 4:2:2, and YC_BC_R 4:4:4 (as specified in Section 6.5) may be used on HDMI.

All HDMI Sources and Sinks shall be capable of supporting RGB 4:4:4 pixel encoding.

All HDMI Sources shall support either YC_BC_R 4:2:2 or YC_BC_R 4:4:4 pixel encoding whenever that device is capable of transmitting a color-difference color space across any other component analog or digital video interface.

All HDMI Sinks shall be capable of supporting both YC_BC_R 4:4:4 and YC_BC_R 4:2:2 pixel encoding when that device is capable of supporting a color-difference color space from any other component analog or digital video input.

If an HDMI Sink supports either YC_BC_R 4:2:2 or YC_BC_R 4:4:4 then both shall be supported.

An HDMI Source may determine the pixel-encodings that are supported by the Sink through the use of the E-EDID. If the Sink indicates that it supports YC_BC_R-formatted video data and if the Source can deliver YC_BC_R data, then it can enable the transfer of this data across the link.

6.3 Video Format Timing Specifications

All specified video line pixel counts and video field line counts (both active and total) and HSYNC and VSYNC positions and durations shall be adhered to when transmitting a specified video format timing.

For example, if a Source is processing material with fewer active pixels per line than required (i.e. 704 pixels vs. 720 pixels for standard definition MPEG2 material), it may add pixels to the left and right of the supplied material before transmitting across HDMI. AVI bar info may need to be adjusted to account for these added pixels.

Detailed timing is found in EIA/CEA-861B for the following primary and optional video format timings.

IPR2024-001429
HP – EX1010, Page 72 of 193

6.3.1 Primary Video Format Timings

- 640x480p @ 59.94/60Hz
- 1280x720p @ 59.94/60Hz
- 1920x1080i @ 59.94/60Hz
- 720x480p @ 59.94/60Hz
- 720(1440)x480i @ 59.94/60Hz
- 1280x720p @ 50Hz
- 1920x1080i @ 50Hz
- 720x576p @ 50Hz
- 720(1440)x576i @ 50Hz

6.3.2 Optional Video Format Timings

- 720(1440)x240p @ 59.94/60Hz
- 2880x480i @ 59.94/60Hz
- 2880x240p @ 59.94/60Hz
- 1440x480p @ 59.94/60Hz
- 1920x1080p @ 59.94/60Hz
- 720(1440)x288p @ 50Hz
- 2880x576i @ 50Hz
- 2880x288p @ 50Hz
- 1440x576p @ 50Hz
- 1920x1080p @ 50Hz
- 1920x1080p @ 23.98/24Hz
- 1920x1080p @ 25Hz
- 1920x1080p @ 29.97/30Hz

6.4 Pixel-Repetition

Video formats with native pixel rates below 25 Mpixels/sec require pixel-repetition in order to be carried across a TMDS link. 720x480i and 720x576i video format timings shall always be pixel-repeated.

The HDMI Source indicates the use of pixel-repetition with the Pixel Repetition (PR0:PR3) field in the AVI InfoFrame. This field indicates to the HDMI Sink how many repetitions of each unique pixel are transmitted. In non-repeated formats, this value is zero.

For pixel-repeated formats, this value indicates the number of pixels that may be discarded by the Sink without losing real image content.

IPR2024-001429
HP – EX1010, Page 73 of 193

The Source shall always accurately indicate the pixel repetition count being used. The use of the Pixel Repetition field is optional for HDMI Sink.

The use of this pixel-repetition count field is more fully described in EIA/CEA-861B.

6.5 Pixel Encodings

There are three different pixel encodings that may be sent across an HDMI cable: YC_BC_R 4:4:4, YC_BC_R 4:2:2 and RGB 4:4:4. Whichever encoding is used, it shall conform to one of the methods described in this section.

Figure 6-1 shows the default encoding, RGB 4:4:4. The R, G, and B components of the first pixel for a given line of video are transferred on the first pixel of the video data period following the Guard Band characters.

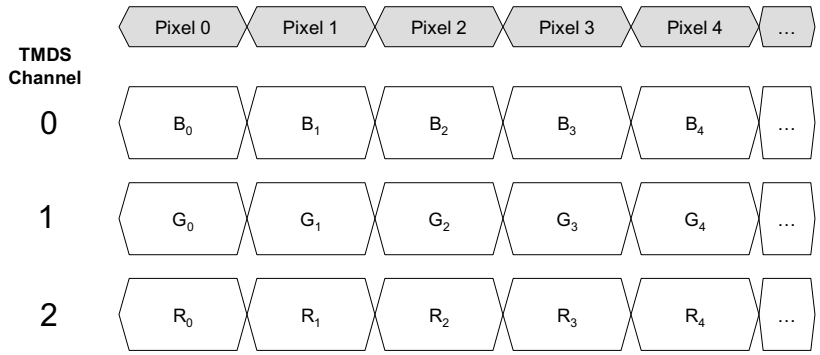

Figure 6-1 Default pixel encoding: RGB 4:4:4, 8 bits/component

Figure 6-2 shows the signal mapping and timing for transferring YC_BC_R 4:2:2 data across HDMI. Because 4:2:2 data only requires two components per pixel clock, more bits are allocated per component. The available 24 bits are split into 12 bits for the Y component and 12 bits for the C components.

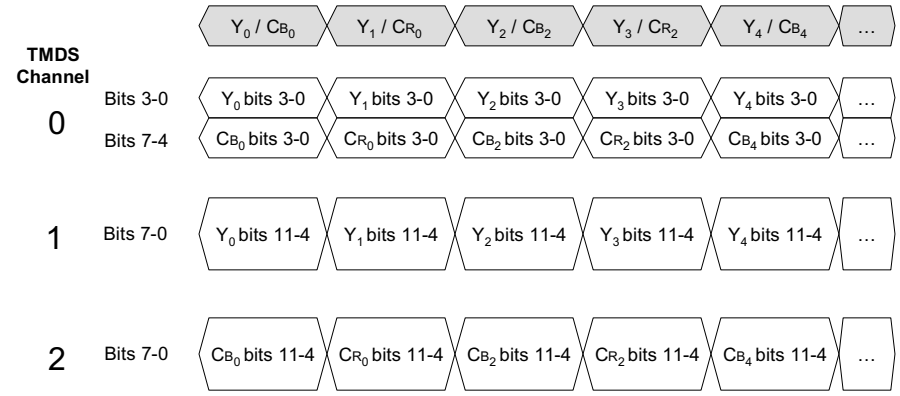

Figure 6-2 YC_BC_R 4:2:2 component

The YC_BC_R 4:2:2 pixel encoding on HDMI closely resembles standard ITU-R BT.601. The high-order 8 bits of the Y samples are mapped onto the 8 bits of Channel 1 and the low-order 4 bits

IPR2024-001429
HP – EX1010, Page 74 of 193

are mapped onto the low-order 4 bits of Channel 0. If fewer than 12 bits are used, the valid bits shall be left-justified (i.e. MSb=MSb) with zeroes padding the bits below the LSb.

The first pixel transmitted within a Video Data Period contains three components, Y0, Cb0 and Cr0. The Y0 and Cb0 components are transmitted during the first TMDS pixel clock period while Cr0 is transmitted during the second TMDS pixel clock period. This second pixel clock period also contains the only component for the second pixel – Y1. In this way, the link carries one C_B sample for every two TMDS pixel clocks and one Cr sample for every two TMDS pixel clocks. These two components (C_B and C_R) are multiplexed onto the same signal paths on the link.

At the third TMDS pixel clock, this process is repeated with the Y and C_B components for the third pixel being transmitted, followed, on the next clock, by the C_R component of the third pixel and the Y component of the fourth pixel.

YC_BC_R 4:4:4 data is transferred using the scheme illustrated in Figure 6-3.

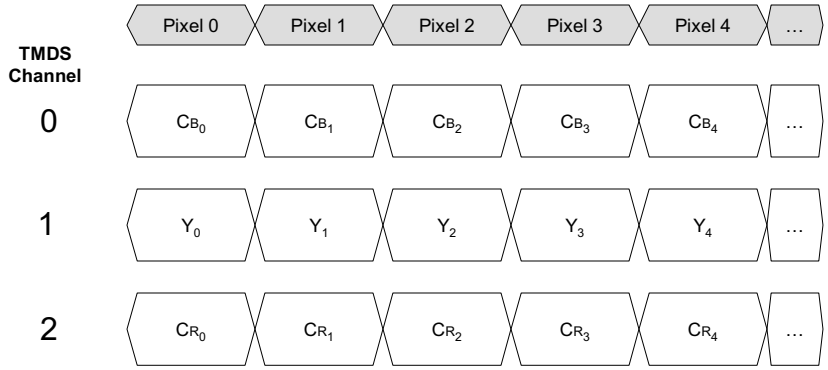

Figure 6-3 8-bit YC_BC_R 4:4:4 mapping

During pixel-doubling (Pixel_Repetition_Count = 1), all of the data sent across during the first pixel clock will be repeated during the second pixel clock. The third clock will then represent the second actual pixel and so on.

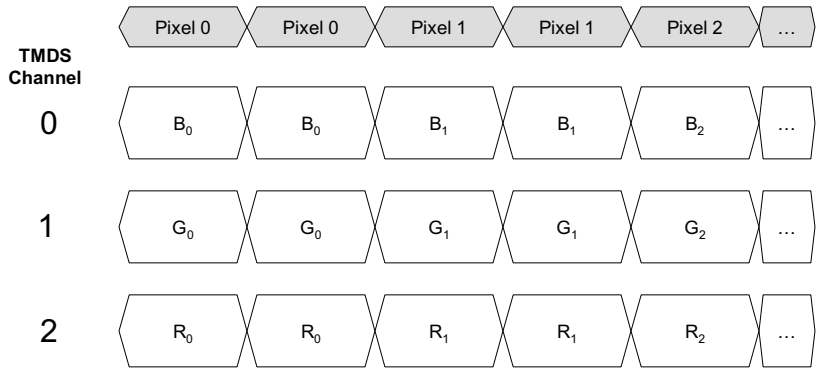

Figure 6-4 RGB with Pixel-Doubling

IPR2024-001429
HP – EX1010, Page 75 of 193

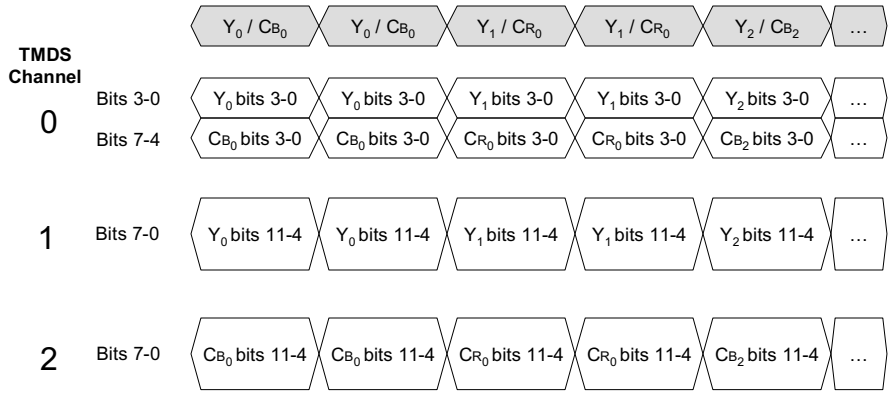

Figure 6-5 YC_BC_R 4:2:2 with Pixel-Doubling

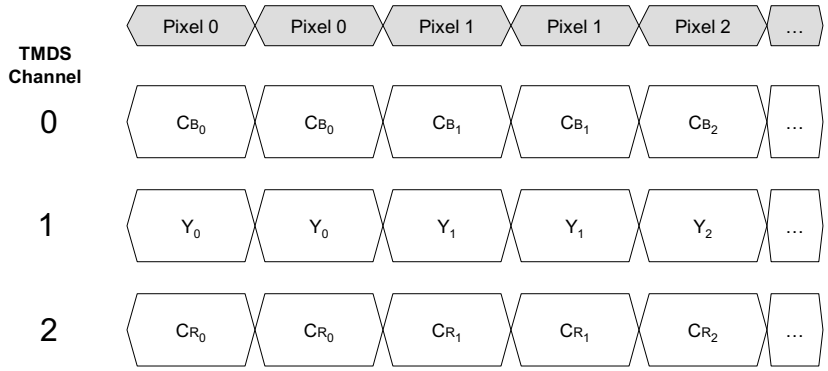

Figure 6-6 YC_BC_R 4:4:4 with Pixel-Doubling

6.6 Video Quantization Ranges

Black and white levels for video components shall be either “Full Range” or “Limited Range.” YC_BC_R components shall always be Limited Range while RGB components may be either Full Range or Limited Range. While using RGB, Limited Range shall be used for all video formats defined in EIA/CEA-861B, with the exception of VGA (640x480) format which requires Full Range.

IPR2024-001429
HP – EX1010, Page 76 of 193

Table 6-1 Video Color Component Ranges

Color Space	Component Bit Depth	for Full range		for Limited range	
		Black level	White level	Black level	White level
R / G / B	8	0	255	16	235
Y / C_B / C_R	8	not allowed		16	235 (Y), 240 (C_B, C_R)
Y / C_B / C_R	10	not allowed		64	940 (Y), 960 (C_B, C_R)
Y / C_B / C_R	12	not allowed		256	3760 (Y), 3840 (C_B, C_R)

6.7 Colorimetry

6.7.1 480p, 480i, 576p, 576i, 240p and 288p

The 480-line, 576-line, 240-line, and 288-line video formats are typically transmitted with a color space based on SMPTE 170M.

ITU-R BT.601-5 Section 3.3 shall be used for any color space conversion needed in the course of processing unless a different colorimetry is specified in the AVI InfoFrame.

The encoding parameter values shall be as defined in Table 3 of ITU-R BT.601-5 and as summarized in Section 6.6.

6.7.2 1080i, 1080p and 720p

The high-definition video formats are typically transmitted with a color space based on ITU-R BT.709-4.

ITU-R BT.709-4 Part 1, Section 4 shall be used for any color space conversion needed in the course of processing unless a different colorimetry is specified in the AVI InfoFrame.

The digital representation shall be as defined in Part 1, Section 6.10 of ITU-R BT.709-4 and as summarized in Section 6.6.

IPR2024-001429
HP – EX1010, Page 77 of 193

7 Audio

7.1 Relationship with IEC 60958/IEC 61937 (IEC)

Audio data is formatted in the Audio Sample Packet as a structure that closely resembles an IEC 60958 or IEC 61937 frame.

On HDMI, each IEC 60958 sub-frame is represented as a 28-bit word. There is no encoding of the preamble type which instead is replaced with a “B” bit (start-of-block) in each Audio Sample packet. The B bit shall be set for a “B, W” frame and shall be clear for an “M, W” frame. (IEC 60958-1 Section 4.1.2). No other sub-frame preamble combinations are allowed.

The behavior of all fields within the Audio Sample Subpackets shall follow the corresponding rules specified in the IEC 60958 or IEC 61937 specifications.

7.2 Audio Sample Clock Capture and Regeneration

Audio data being carried across the HDMI link, which is driven by a TMDS (video) clock only, does not retain the original audio sample clock. The task of recreating this clock at the Sink is called Audio Clock Regeneration.

There are a variety of clock regeneration methods that can be implemented in an HDMI Sink, each with a different set of performance characteristics. This specification does not attempt to define exactly how these mechanisms operate. It does however present a possible configuration and it does define the data items that the HDMI Source shall supply to the HDMI Sink in order to allow the HDMI Sink to adequately regenerate the audio clock. It also defines how that data shall be generated.

In many video source devices, the audio and video clocks are generated from a common clock (coherent clocks). In this situation, there exists a rational (integer divided by integer) relationship between these two clocks. The HDMI clock regeneration architecture can take advantage of this rational relationship and can also work in an environment where there is no such relationship between these two clocks, that is, where the two clocks are truly asynchronous or where their relationship is unknown.

Figure 7-1 Audio Clock Regeneration model, illustrates the overall system architecture model used by HDMI for audio clock regeneration. The Source shall determine the fractional relationship between the video clock and an audio reference clock (128 * audio sample rate) and shall pass the numerator and denominator for that fraction to the Sink across the HDMI link. The Sink may then recreate the audio clock from the TMDS clock by using a clock divider and a clock multiplier.

The exact relationship between the two clocks will be:

$$128 * f_S = f_{TMDS_clock} * N / CTS.$$

The Source shall determine the value of the numerator N as specified in Section 7.2.1. Typically, this value N will be used in a clock divider to generate an intermediate clock that is slower than the $128 * f_S$ clock by the factor N. The Source will typically determine the value of the denominator CTS (Cycle Time Stamp) by counting the number of TMDS clocks in each of the $128 * f_S/N$ clocks.

If there is a constant fractional relationship between these two clocks, and the two clocks are exactly synchronous, then the CTS value will quickly come to a constant value. If the clocks are asynchronous, or there is some amount of jitter between the two clocks, then the CTS value will

IPR2024-001429
HP – EX1010, Page 78 of 193

typically alternate between two or three different values. Greater variations are possible with larger jitter.

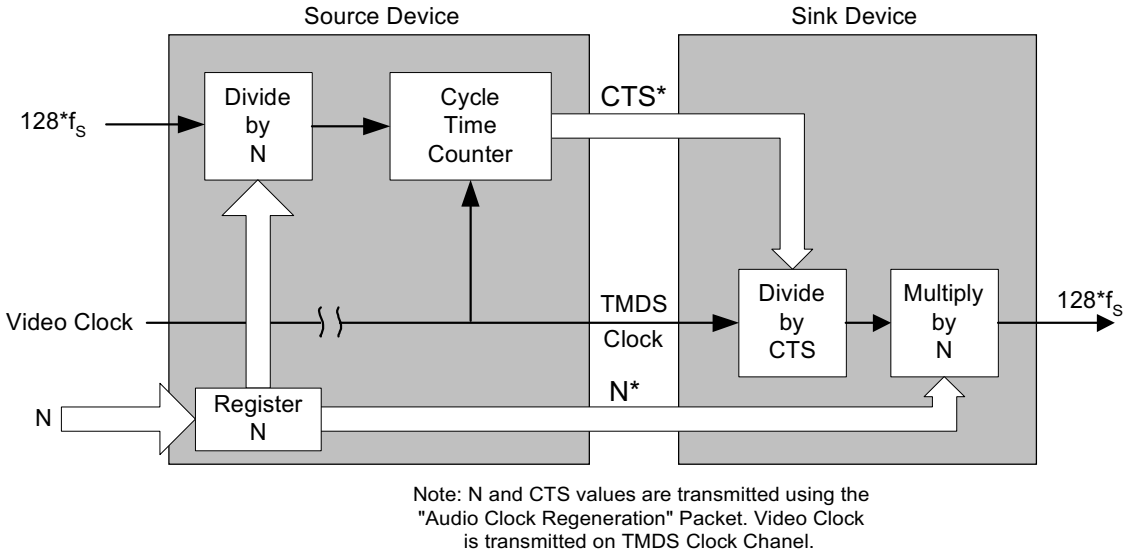

Figure 7-1 Audio Clock Regeneration model

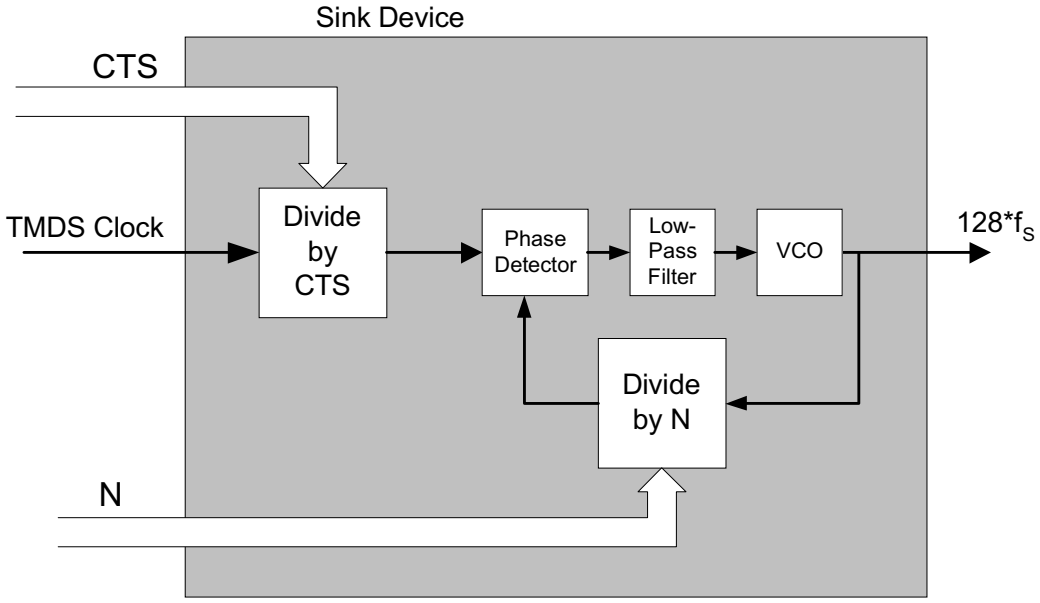

Figure 7-2 Optional Implementation: Audio Sink

It is expected that most Sinks will be implemented with an architecture similar to that shown in Figure 7-2, however, it is permitted and possible to devise an audio clock regeneration function that does not take advantage of the N or CTS values passed to the Sink.

7.2.1 N parameter

N shall be an integer number and shall meet the following restriction:

IPR2024-001429
HP – EX1010, Page 79 of 193

$128 * f_S$ / 1500Hz ≤ N ≤ $128 * f_S$ / 300Hz

with a recommended optimal value of

$128 * f_S$ / 1000Hz approximately equals N

For coherent audio and video clock Sources, the tables below should be used to determine the value of N. For non-coherent Sources or Sources where coherency is not known, the equations above should be used.

7.2.2 CTS parameter

CTS shall be an integer number which satisfies the following:

(Average CTS value) = $(f_{TMDS_clock} * N) / (128 * f_S)$

7.2.3 Recommended N and Expected CTS Values

The recommended value of N for several standard pixel clocks are given in Table 7-1, Table 7-2, and Table 7-3. It is recommended that Sources with non-coherent clocks use the values listed for a pixel clock of “Other”.

Table 7-1 Recommended N and Expected CTS for 32kHz Audio

	32 kHz	
Pixel Clock (MHz)	N	CTS
25.2 / 1.001	4576	28125
25.2	4096	25200
27	4096	27000
27 * 1.001	4096	27027
54	4096	54000
54 * 1.001	4096	54054
74.25 / 1.001	11648	210937-210938*
74.25	4096	74250
148.5 / 1.001	11648	421875
148.5	4096	148500
Other	4096	measured

*Note: This value will alternate because of restriction on N.

IPR2024-001429
HP – EX1010, Page 80 of 193

Table 7-2 Recommended N and Expected CTS for 44.1kHz and Multiples

	44.1 kHz		88.2 kHz		176.4 kHz	
Pixel Clock (MHz)	N	CTS	N	CTS	N	CTS
25.2 / 1.001	7007	31250	14014	31250	28028	31250
25.2	6272	28000	12544	28000	25088	28000
27	6272	30000	12544	30000	25088	30000
27 * 1.001	6272	30030	12544	30030	25088	30030
54	6272	60000	12544	60000	25088	60000
54 * 1.001	6272	60060	12544	60060	25088	60060
74.25 / 1.001	17836	234375	35672	234375	71344	234375
74.25	6272	82500	12544	82500	25088	82500
148.5 / 1.001	8918	234375	17836	234375	35672	234375
148.5	6272	165000	12544	165000	25088	165000
Other	6272	measured	12544	measured	25088	measured

Table 7-3 Recommended N and Expected CTS for 48kHz and Multiples

	48 kHz		96 kHz		192 kHz	
Pixel Clock (MHz)	N	CTS	N	CTS	N	CTS
25.2 / 1.001	6864	28125	13728	28125	27456	28125
25.2	6144	25200	12288	25200	24576	25200
27	6144	27000	12288	27000	24576	27000
27 * 1.001	6144	27027	12288	27027	24576	27027
54	6144	54000	12288	54000	24576	54000
54 * 1.001	6144	54054	12288	54054	24576	54054
74.25 / 1.001	11648	140625	23296	140625	46592	140625
74.25	6144	74250	12288	74250	24576	74250
148.5 / 1.001	5824	140625	11648	140625	23296	140625
148.5	6144	148500	12288	148500	24576	148500
other	6144	measured	12288	measured	24576	measured

IPR2024-001429
HP – EX1010, Page 81 of 193

7.3 Audio Sample Rates and Support Requirements

If an HDMI Source supports audio transmission across any output, then it shall support HDMI audio transmission. Exceptions to this rule for Sources with Type B connectors are found in Appendix B.

If an HDMI Source supports any HDMI audio transmission, then it shall support 2 channel L-PCM using an IEC 60958 Subpacket structure, with either 32kHz, 44.1kHz or 48kHz sampling rate and a sample size of 16 bits or more.

An HDMI Source is permitted to transmit L-PCM or encoded audio data at sample rates of 32kHz, 44.1kHz, 48kHz, 88.2kHz, 96kHz, 176.4kHz and 192kHz using either IEC 60958 format or IEC 61937 format.

If an HDMI Sink supports audio reception across any input, then it shall support audio reception from all HDMI inputs.

An HDMI Sink that is capable of accepting any audio format is required to accept two channel IEC 60958-formatted L-PCM audio at sample rates of 32kHz, 44.1kHz, and 48kHz.

For EIA/CEA-861B references to Sources, “Basic Audio” is defined as two channel L-PCM audio at sample rates of 32kHz, 44.1kHz, *or* 48kHz, with a sample size of at least 16 bits. For EIA/CEA-861B references to DTV devices, “Basic Audio” is defined as two channel L-PCM audio at sample rates of 32kHz, 44.1kHz, *and* 48kHz. There is no sample size usage restriction for DTV devices.

An HDMI Sink may optionally accept audio at sample rates of 88.2kHz, 96kHz, 176.4kHz and/or 192kHz using either IEC 60958 format or IEC 61937 format, and should indicate these capabilities in the E-EDID data structure.

An HDMI Repeater shall support HDMI audio reception and transmission.

Whenever transmitting a valid audio stream, HDMI Sources shall always include valid sample rate information in the Channel Status bits of the audio sample packets, per Table 7-4.

In some cases, pixel-repetition may be required to increase the available bandwidth for audio transmission. For instance, when transmitting a 720x480p video format timing, it is required to pixel double in order to transmit 6 channels @ 96kHz.

IPR2024-001429
HP – EX1010, Page 82 of 193

Table 7-4 Channel Status Values for Audio Sample Frequencies

Channel Status Bit Number				Sample Frequency
24	25	26	27	
1	1	0	0	32 kHz
0	0	0	0	44.1 kHz
0	0	0	1	88.2 kHz
0	0	1	1	176.4 kHz
0	1	0	0	48 kHz
0	1	0	1	96 kHz
0	1	1	1	192 kHz

7.3.1 Video Dependency

Available audio bandwidth depends upon the pixel clock frequency, the video format timing, and whether or not content protection re-synchronization is needed.

Table 7-5 shows the available audio sample rates for 2-channel (Layout 0) and 8-channel (Layout 1) audio transmission at the various video format timings specified in EIA/CEA-861B, assuming that 58 clocks of the horizontal blanking interval is required for content protection re-synchronization.

IPR2024-001429
HP – EX1010, Page 83 of 193

Table 7-5 Maximum Audio Sampling Frequency for all Video Format Timings (Informative)

Description	Format Timing	Pixel Repetition	Vertical Freq (Hz)	Max f_S 8 ch (kHz)	Max f_S 2 ch (kHz)
60Hz Formats					
VGA	640x480p	none	59.94/60	48	192
480i	1440x480i	2	59.94/60	48	192
480i	2880x480i	4	59.94/60	192	192
240p	1440x240p	2	59.94/60	48	192
240p	2880x240p	4	59.94/60	192	192
480p	720x480p	none	59.94/60	48	192
480p	1440x480p	2	59.94/60	96	192
720p	1280x720p	none	59.94/60	192	192
1080i	1920x1080i	none	59.94/60	192	192
1080p	1920x1080p	none	59.94/60	192	192
50Hz Formats					
576i	1440x576i	2	50	48	192
576i	2880x576i	4	50	192	192
288p	1440x288p	2	50	48	192
288p	2880x288p	4	50	192	192
576p	720x576p	none	50	48	192
576p	1440x576p	2	50	96	192
720p/50	1280x720p	none	50	192	192
1080i/50	1920x1080i	none	50	192	192
1080p/50	1920x1080p	none	50	192	192
1080p @ 24-30Hz					
1080p	1920x1080p	none	24	192	192
1080p	1920x1080p	none	25	192	192
1080p	1920x1080p	none	29.97/30	192	192

IPR2024-001429
HP – EX1010, Page 84 of 193

7.4 Channel / Speaker Assignment

HDMI allows a Sink to indicate the configuration of attached speakers through the use of the Speaker Allocation Data Block described in EIA/CEA-861B page 84 and Table 36.

In addition, for multi-channel L-PCM audio streams, the Source may specify the speaker assignment for each of the channels in the audio stream delivered to the Sink. EIA/CEA-861B Section 6.3.2 specifies the available speaker assignments for active audio channels on HDMI. The indication of the current speaker assignment is carried in the Audio InfoFrame.

7.5 Audio, Video Synchronization

For a variety of reasons, an HDMI link may add a delay to the audio and/or video.

An HDMI Source is required to transmit audio and video data streams with no more than ±2 msec of audio delay relative to the video. Due to the uneven transmission of audio data, the delay shall be considered to be the average delay of all of the audio sample packets over the course of 3 steady-state video frames.

7.6 Audio Data Packetization

Each Subpacket of an Audio Sample Packet shall contain zero or one IEC 60958-defined "frames" of an IEC 60958 or IEC 61937 "block." There are two defined Subpacket layouts. No others are permitted.

Table 7-6 Audio Packet Layout and Layout Value

Layout Value	Max Num Channels	Samples	Subpkt 0	Subpkt 1	Subpkt 2	Subpkt 3
0	2	4	Chnl 1,2 Sample 0	Chnl 1,2 Sample 1	Chnl 1,2 Sample 2	Chnl 1,2 Sample 3
1	8	1	Chnl 1,2 Sample 0	Chnl 3,4 Sample 0	Chnl 5,6 Sample 0	Chnl 7,8 Sample 0

There are four sample_present bits in the Audio Sample Packet Header, one for each of the Subpackets. These indicate if that Subpacket contains an audio sample.

In addition, there are four sample_flat.spX bits which are set if no useful audio data was available at the Source during the time period represented by that sample. This may occur during sample rate changes or temporary stream interruptions. When sample_flat.spX is set, Subpacket X continues to represent a sample period but does not contain useful audio data. The sample_flat.spX bit is only valid when the corresponding sample_present.spX bit is set.

Layout 0 can carry up to four samples from a single IEC 61937 or a single 2-channel IEC 60958 stream of audio.

There are only five valid configurations of sample_present bits for a Layout 0 Audio Packet. They are shown in Table 7-7.

IPR2024-001429
HP – EX1010, Page 85 of 193

Table 7-7 Valid Sample_Present Bit Configurations for Layout 0

SP0	SP1	SP2	SP3	Description
0	0	0	0	No Subpackets contain samples.
1	0	0	0	Only Subpacket 0 contains a sample.
1	1	0	0	Subpackets 0 and 1 contain samples.
1	1	1	0	Subpackets 0, 1, and 2 contain samples.
1	1	1	1	All Subpackets contain samples.

Layout 1 can carry only one sample with two to eight channels of L-PCM audio (i.e. one to four IEC 60958 streams) and is required for all stream groups with greater than 2 channels.

Valid combinations of sample_present bits for Layout 1 Audio Packets are determined by the permitted channel assignments as described in EIA/CEA-861B Section 6.3.2.

An HDMI Source shall place the data shown into the specified Subpackets and to identify the layout in the Audio Sample Packet Header.

The fields within a Subpacket with a corresponding sample_flat bit set or a sample_present bit clear, are not defined and can be any value.

IPR2024-001429
HP – EX1010, Page 86 of 193

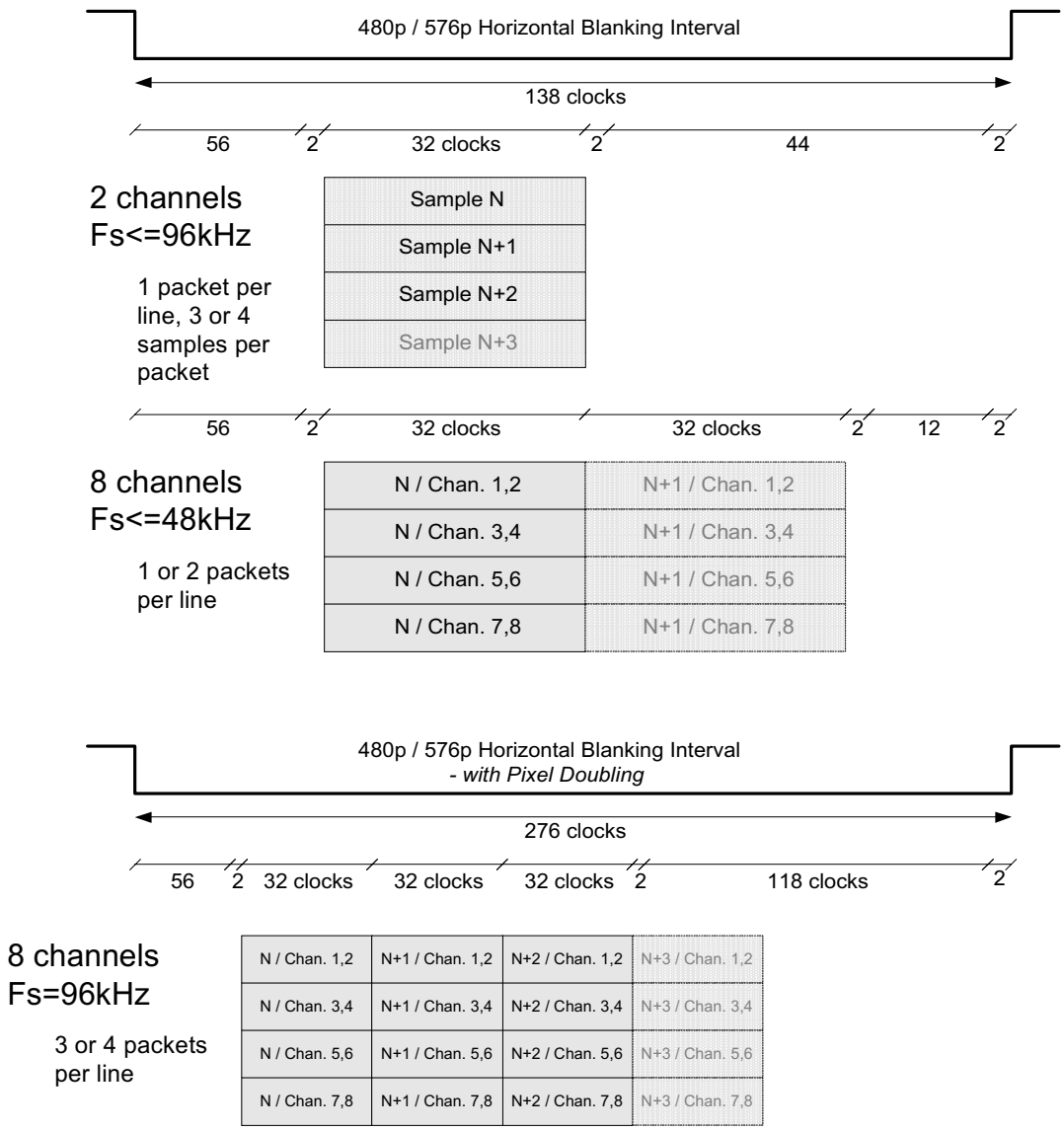

Figure 7-3 Example Audio Sample Timing (Informative)

7.7 Error Handling (Informative)

The behavior of the Sink after detecting an error is implementation-dependent. However, Sinks should be designed to prevent loud spurious noises from being heard. Sample repetition and interpolation are well known concealment techniques and are recommended.

IPR2024-001429
HP – EX1010, Page 87 of 193

7.8 Packet Delivery Rules

7.8.1 Audio Sample Packets

All audio samples that are stored in a source buffer shall be sent as soon as possible while still fulfilling requirements for audio/video synchronization, and Data Island timing and placement. When using Layout 0 Audio Sample Packets, the Source shall transmit an Audio Sample Packet if at least one sample is stored in the source buffer.

Relative to an ideal constant-frequency clock, the jitter present in the Audio Sample Packet transmission timing shall not exceed one horizontal line period plus a single audio sample period.

7.8.2 Audio Clock Regeneration Packets

Nominally, Audio Clock Regeneration Packets with new (non-zero) CTS values will be transmitted at a rate of $128*f_S/N$. The Source shall transmit each new CTS data value as close as possible to the nominal transmission time for that value with the exception that priority must be given to Audio Sample packets to ensure that Audio Sample Packet delivery requirements are met.

IPR2024-001429
HP – EX1010, Page 88 of 193

8 Control And Configuration

8.1 Overview

HDMI includes three separate communications channels: TMDS, DDC, and the optional CEC.

TMDS is used to carry all audio and video data as well as auxiliary data, including AVI and Audio InfoFrames that describe the active audio and video streams.

The DDC channel is used by an HDMI Source to determine the capabilities and characteristics of the Sink by reading the E-EDID data structure.

HDMI Sources are expected to read the Sink's E-EDID and to deliver only the audio and video formats which are supported by the Sink. Also, HDMI Sinks are expected to detect InfoFrames and to process the received audio and video data appropriately.

The CEC channel is optionally used for higher-level user functions such as automatic setup tasks or tasks typically associated with infrared remote control usage.

8.2 EIA/CEA-861B InfoFrames

An InfoFrame packet carries one InfoFrame. The InfoFrame provided by HDMI is limited to 30 bytes plus a checksum byte. HDMI Sources are recommended to use the AVI InfoFrame and Audio InfoFrame. Other InfoFrames specified in EIA/CEA-861B are optional.

All InfoFrames are described in detail in EIA/CEA-861B Section 6. The following describes how two of these InfoFrames are placed within the InfoFrame Packet structure and any areas where HDMI behavior is different than that specified in EIA/CEA-861B.

8.2.1 Auxiliary Video information (AVI) InfoFrame

Various aspects of the current video stream are indicated by the HDMI Source to the Sink with an Auxiliary Video information (AVI) InfoFrame.

The packetization of the AVI InfoFrame Version 2 is shown below.

Table 8-1 AVI InfoFrame Packet Header

Byte \ Bit #	7	6	5	4	3	2	1	0
HB0	Packet Type = 0x82							
HB1	Version = 0x02							
HB2	0	0	0	Length = 13 (0x0D)				

IPR2024-001429
HP – EX1010, Page 89 of 193

Table 8-2 AVI InfoFrame Packet Contents

Packet Byte #	EIA/CEA-861B Byte #	7	6	5	4	3	2	1	0
PB0	N. A.	Checksum							
PB1	Data Byte 1	Rsvd (0)	Y1	Y0	A0	B1	B0	S1	S0
PB2	Data Byte 2	C1	C0	M1	M0	R3	R2	R1	R0
PB3	Data Byte 3	Reserved (0)						SC1	SC0
PB4	Data Byte 4	Rsvd (0)	VIC6	VIC5	VIC4	VIC3	VIC2	VIC1	VIC0
PB5	Data Byte 5	Reserved (0)				PR3	PR2	PR1	PR0
PB6	Data Byte 6	Line Number of End of Top Bar (lower 8 bits)							
PB7	Data Byte 7	Line Number of End of Top Bar (upper 8 bits)							
PB8	Data Byte 8	Line Number of start of Bottom Bar (lower 8 bits)							
PB9	Data Byte 9	Line Number of start of Bottom Bar (upper 8 bits)							
PB10	Data Byte 10	Pixel Number of End of Left Bar (lower 8 bits)							
PB11	Data Byte 11	Pixel Number of End of Left Bar (upper 8 bits)							
PB12	Data Byte 12	Pixel Number of End of Right Bar (lower 8 bits)							
PB13	Data Byte 13	Pixel Number of End of Right Bar (upper 8 bits)							
PB14-PB27	Data Bytes 14-27	Reserved (0)							

- Y0, Y1 RGB or YC_BC_R indicator. See EIA/CEA-861B table 8 for details.
- A0 Active Information Present. See EIA/CEA-861B table 8 for details.
- B0, B1 Bar Info data valid. See EIA/CEA-861B table 8 for details.
- S0, S1 Scan Information (i.e. overscan, underscan). See EIA/CEA-861B table 8 for details.
- C0, C1 Colorimetry (ITU BT.601, BT.709 etc.). See EIA/CEA-861B table 9 for details.
- M0, M1 Picture Aspect Ratio (4:3, 16:9). See EIA/CEA-861B table 9 for details.
- R0…R3 Active Format Aspect Ratio. See EIA/CEA-861B table 10 and Annex H for details.
- VIC0…VIC6 Video Format Identification Code. See EIA/CEA-861B table 13 for details.
- PR0…PR3 Pixel Repetition factor. See EIA/CEA-861B table 14 for details.
- SC1, SC0 Non-uniform Picture Scaling. See EIA/CEA-861B table 11 and paragraph on page 58.

IPR2024-001429
HP – EX1010, Page 90 of 193

Table 8-3 HDMI Valid Pixel Repeat Values for Each Format

Video Code	Video Description	EIA/CEA-861B Pixel Repeat Values	HDMI Pixel Repeat Values
1	640x480p @ 60Hz	No Repetition	No Repetition
2,3	720x480p @ 59.94/60Hz	No Repetition	No Repetition
4	1280x720p @ 59.94/60Hz	No Repetition	No Repetition
5	1920x1080i @ 59.94/60Hz	No Repetition	No Repetition
6,7	720(1440)x480i @ 59.94/60Hz	Pixel sent 2 times	Pixel sent 2 times
8,9	720(1440)x240p @ 59.94/60Hz	Pixel sent 2 times	Pixel sent 2 times
10,11	2880x480i @ 59.94/60Hz	Pixel sent 1 to 10 times	Pixel sent 1 to 10 times
12,13	2880x240p @ 59.94/60Hz	Pixel sent 1 to 10 times	Pixel sent 1 to 10 times
14,15	1440x480p @ 59.94/60Hz	No Repetition	Pixel sent 1 to 2 times**
16	1920x1080p @ 59.94/60Hz	No Repetition	No Repetition
17,18	720x576p @ 50Hz	No Repetition	No Repetition
19	1280x720p @ 50Hz	No Repetition	No Repetition
20	1920x1080i @ 50Hz	No Repetition	No Repetition
21,22	720(1440)x576i @ 50Hz	Pixel sent 2 times	Pixel sent 2 times
23,24	720(1440)x288p @ 50Hz	Pixel sent 2 times	Pixel sent 2 times
25,26	2880x576i @ 50Hz	Pixel sent 1 to 10 times	Pixel sent 1 to 10 times
27,28	2880x288 @ 50Hz	Pixel sent 1 to 10 times	Pixel sent 1 to 10 times
29,30	1440x576p @ 50Hz	No Repetition	Pixel sent 1 to 2 times**
31	1920x1080p @ 50Hz	No Repetition	No Repetition
32	1920x1080p @ 23.97/24Hz	No Repetition	No Repetition
33	1920x1080p @ 25Hz	No Repetition	No Repetition
34	1920x1080p @ 29.97/30Hz	No Repetition	No Repetition

** - Denotes change from EIA/CEA-861B valid values. Pixel repetition is required to support some audio formats at 720x480p and 720x576p video format timings. See Section 7.3.1

IPR2024-001429
HP – EX1010, Page 91 of 193

8.2.2 Audio InfoFrame

A Source shall indicate characteristics of the active audio stream through the use of the IEC 60958 Channel Status bits and through the use of the Audio InfoFrame. Whenever an active audio stream is being transmitted, an accurate Audio InfoFrame shall be transmitted at least once per two video fields.

Upon the start of a new audio stream or upon any change in the audio stream that can be indicated by the Audio InfoFrame, a modified, accurate Audio InfoFrame shall be transmitted no later than one video field following the first affected non-silent audio sample. Preferably this would occur just before the first affected audio sample is transmitted.

The Audio InfoFrame transmission may occur at any time that a Data Island packet may be transmitted, including during any horizontal or vertical blanking period.

The following tables show the packetization of the Audio InfoFrame.

Table 8-4 Audio InfoFrame Packet Header

Byte \ Bit #	7	6	5	4	3	2	1	0
HB0	Packet Type = 0x84							
HB1	Version Number = 0x01							
HB2	0	0	0	Length = 10 (0x0A)				

IPR2024-001429
HP – EX1010, Page 92 of 193

Table 8-5 Audio InfoFrame Packet contents

Packet Byte #	EIA/CEA-861B Byte #	7	6	5	4	3	2	1	0
PB0	n. a.	checksum							
PB1	Data Byte 1	CT3	CT2	CT1	CT0	Rsvd	CC2	CC1	CC0
PB2	Data Byte 2	Reserved			SF2	SF1	SF0	SS1	SS0
PB3	Data Byte 3	Format depends on coding type (i.e. CT0…CT3)							
PB4	Data Byte 4	CA7	CA6	CA5	CA4	CA3	CA2	CA1	CA0
PB5	Data Byte 5	DM_INH	LSV3	LSV2	LSV1	LSV0	Reserved		
PB6	Data Byte 6	Reserved							
PB7	Data Byte 7	Reserved							
PB8	Data Byte 8	Reserved							
PB9	Data Byte 9	Reserved							
PB10	Data Byte 10	Reserved							
PB11-PB27	Data Byte 11-27	Reserved							

- CC0…CC2 Channel Count. See EIA/CEA-861B table 19 for details.
- CT0…CT3 Coding Type. See EIA/CEA-861B table 19 for details. The CT bits shall always be set to a value of 0, 0, 0, 0 (“Refer to Stream Header”).
- SS0…SS1 Sample Size. See EIA/CEA-861B table 20 for details. The SS bits shall always be set to a value of 0, 0 (“Refer to Stream Header”).
- SF0…SF2 Sample Frequency. See EIA/CEA-861B table 20 for details. The SF bits shall always be set to a value of 0, 0, 0 (“Refer to Stream Header”).
- CA0…CA7 Channel/Speaker Allocation. See EIA/CEA-861B Section 6.3.2 for details.
- LSV0…LSV3 Level Shift Value (for downmixing). See EIA/CEA-861B Section 6.3.2 and EIA/CEA-861B table 23 for details.
- DM_INH Downmix Inhibit. See EIA/CEA-861B Section 6.3.2 and table 24 for details. The DM_INH field is to be set only for DVD-Audio applications and corresponds to the value in the DM_INH field of the current audio stream being played from the disk. The DM_INH field value shall be set to zero in all cases other than DVD-Audio applications.

Data Byte 3 must always be set to a value of 0.

IPR2024-001429
HP – EX1010, Page 93 of 193

8.3 E-EDID Data Structure

All Sinks shall contain an EIA/CEA-861B compliant E-EDID data structure accessible through the DDC.

A Source shall read the EDID 1.3 and first CEA EDID Timing Extension to determine the capabilities supported by the Sink. Additional extensions may be read to discover additional capabilities. The Source is responsible for any format conversions that may be necessary to supply audio and video in an understandable form to the Sink. However, it is permitted for a Source to transmit Basic Audio (see Section 7.3) to a Sink that does not indicate support for Basic Audio.

The overall structure of the E-EDID in the Sink shall conform to the E-EDID structure defined in the VESA E-EDID Standard Release A, Revision 1, but shall also meet the additional requirements specified herein.

The first 128 bytes of the E-EDID shall contain an EDID 1.3 structure. The contents of this structure shall also meet the requirements of EIA/CEA-861B.

8.3.1 EDID Timing Extension

The first E-EDID 'extension' shall contain a CEA EDID Timing Extension version 3, defined in EIA/CEA-861B section 7.5. Additional CEA EDID Timing Extensions may also be present. The E-EDID shall not contain an EDID Timing Extension version 1 or version 2.

EDID Timing Extension version 3 details are described in EIA/CEA-861B Section 7.5.

Further details on the requirements of the data structures in the E-EDID and implementation examples are given in EIA/CEA-861B.

8.3.2 HDMI Vendor-Specific Data Block (HDMI VSDB)

The first CEA EDID Timing Extension shall include an HDMI Vendor Specific Data Block (HDMI VSDB) shown in Table 8-6. This is an EIA/CEA-861B Vendor Specific Data Block (see EIA/CEA-861B tables 30, 31 and 32 for details) with a 24-bit IEEE Registration Identifier of 0x000C03 belonging to the HDMI Licensing, LLC.

Sinks shall contain an HDMI VSDB with a length field of 5, indicating the presence of a 2-byte Source Physical Address field following the 24-bit identifier. No other length field value is permitted.

IPR2024-001429
HP – EX1010, Page 94 of 193

Table 8-6 HDMI-LLC Vendor-Specific Data Block (HDMI VSDB)

Byte #	7	6	5	4	3	2	1	0
0	Vendor-specific tag code (=3)			Length (=5)				
1	24-bit IEEE Registration Identifier (0x000C03) (least significant byte first)							
2								
3								
4	A				B			
5	C				D			

- A, B, C, D Components of Source Physical Address (A.B.C.D). See Section 8.7.

8.3.3 DVI/HDMI Device Discrimination

When an HDMI Source needs to determine if a sink is an HDMI device, it shall do so by checking the E-EDID for the presence of an HDMI Vendor Specific Data Block within the first CEA EDID Timing Extension version 3 or higher. Any device that contains this structure is an HDMI device. Future versions of HDMI may contain longer versions of this structure. Any device with an E-EDID that does not contain an HDMI VSDB (of any length) shall be treated as a DVI device (see Appendix C).

8.3.4 Audio and Video Details

Sink audio characteristics and support are indicated in the E-EDID. This data includes a list of audio encodings supported by the Sink and parameters associated with each of those encodings.

A Sink may indicate support for YC_BC_R pixel encodings. To indicate support, bits 4 and 5 of byte 3 of the EDID Timing Extension shall both be set to one (see Table 29 of EIA/CEA-861B). To indicate no support, bits 4 and 5 shall both be zero.

If a Sink is required to support a particular video format, video format timing, or pixel encoding, then the Sink shall indicate support for that video format, video format timing or pixel encoding in the E-EDID.

8.4 Enhanced DDC

Enhanced DDC described in this section is defined in VESA “ENHANCED DISPLAY DATA CHANNEL STANDARD Version 1 (September 2, 1999)”. All Sinks are required to support these enhanced DDC features. If a Sink’s E-EDID structure is longer than 256 bytes, it shall support the segment pointer.

8.4.1 Timing

Data is synchronized with the SCL signal and timing shall comply with the Standard Mode of the I^2C specification (100kHz clock).

IPR2024-001429
HP – EX1010, Page 95 of 193

I^2C Bus is a standard two-wire (clock and data) serial data bus protocol. Refer to the I^2C specification for details.

Note that an HDMI Sink may hold off the DDC transaction by stretching the SCL line during the SCL-low period following the Acknowledge bit as permitted by the I^2C specification. All HDMI Sources shall delay the DDC transaction while the SCL line is being held low.

8.4.2 Data Transfer Protocols

The Source shall use I^2C commands to read information from a Sink's E-EDID with a slave address.

In Enhanced DDC, a segment pointer is used to allow addressing of the E-EDID outside of the normal 256-byte limit of the 0xA0/0xA1 address. The Enhanced DDC protocol sets the segment pointer before the remainder of the DDC command.

8.4.3 Segment pointer

Enhanced DDC allows access of up to 32 Kbytes of data. This is accomplished using a combination of the 0xA0/0xA1 address pair and a segment pointer. For each value of the segment pointer, 256 bytes of data are available at the 0xA0/0xA1 address pair. An unspecified segment pointer references the same data as when the segment pointer is zero.

Each successive value of the segment pointer allows access to the next two blocks of E-EDID (128 bytes each). The value of the segment pointer register cannot be read since it is reset at the completion of each command.

8.4.4 Enhanced DDC Sink

The Sink shall be Enhanced DDC read compliant.

The Sink shall be capable of responding with EDID 1.3 data and up to 255 extension blocks, each 128 bytes long (up to 32K bytes total E-EDID memory) whenever the Hot Plug Detect signal is asserted.

The Sink should be capable of providing E-EDID information over the Enhanced DDC channel whenever the +5V Power signal is provided. This should be available within 20msec after the +5V Power signal is provided.

8.4.5 Enhanced DDC Source

The Source shall use Enhanced DDC protocols.

The Source shall be capable of reading EDID 1.3 data at DDC address 0xA0.

The Source reads Enhanced EDID extensions data at DDC address 0xA0 using segment pointer 0x60.

IPR2024-001429
HP – EX1010, Page 96 of 193

8.5 Hot Plug Detect Signal

An HDMI Sink shall not assert high voltage level on its Hot Plug Detect pin when the E-EDID is not available for reading. The Hot Plug Detect pin may be asserted only when the +5V Power line from the Source is detected. This will ensure that the Hot Plug Detect pin is not asserted before the Third Make of the connector (see Section 4.1.5).

A Source may use a high voltage level Hot Plug Detect signal to initiate the reading of E-EDID data.

An HDMI Sink shall indicate any change to the contents of the E-EDID by driving a low voltage level on the Hot Plug Detect pin for at least 100 msec.

8.6 Consumer Electronics Control (CEC)

The CEC line is used for high-level user control of HDMI-connected devices. The mandatory requirements for the CEC line are described in detail in Section 4.2.10, CEC Line. The optional CEC protocol is described in Supplement 1: Consumer Electronics Control (CEC).

8.7 Physical Address

8.7.1 Overview

In order to allow for CEC to be able to address specific physical devices and control switches, all devices must have a physical address. This connectivity has to be worked out whenever a new device is added to the cluster.

The CEC and DDC connections are shown in Figure 8-1.

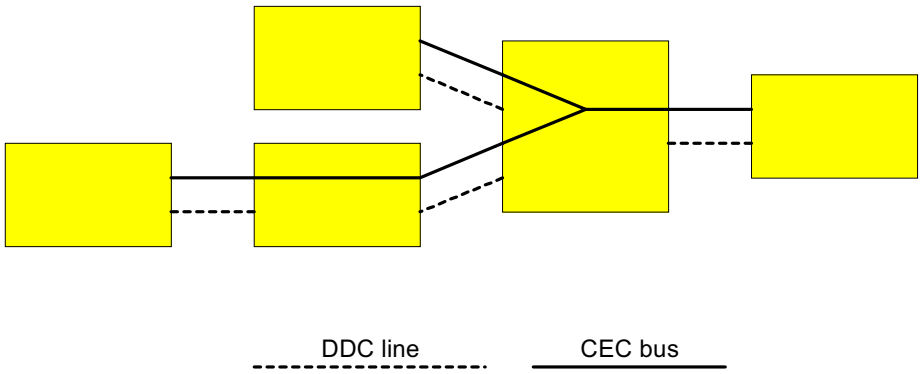

Figure 8-1 CEC and DDC line connections

The CEC line is directly connected to all nodes on the network. This gives a return channel for devices to transmit their physical and logical address across to all other devices, thus allowing any device to create a map of the network.

IPR2024-001429
HP – EX1010, Page 97 of 193

8.7.2 Physical Address Discovery

The physical address of each node is determined through the physical address discovery process.

All addresses are 4 digits long allowing for a 5 deep device hierarchy. All are identified in the form of n.n.n.n in the following description. An example of this is given in Figure 8-3.

In order to allocate these addresses, an algorithm shall be used – this is described in the following section.

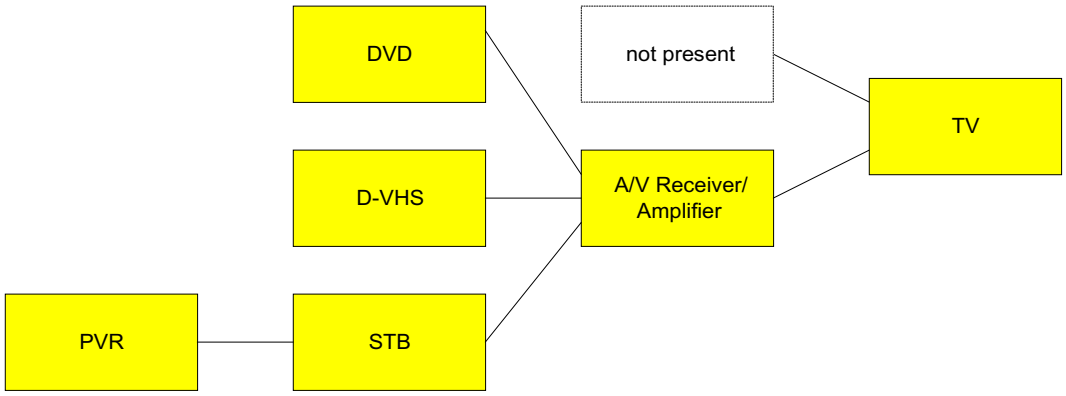

Figure 8-2 Typical HDMI cluster

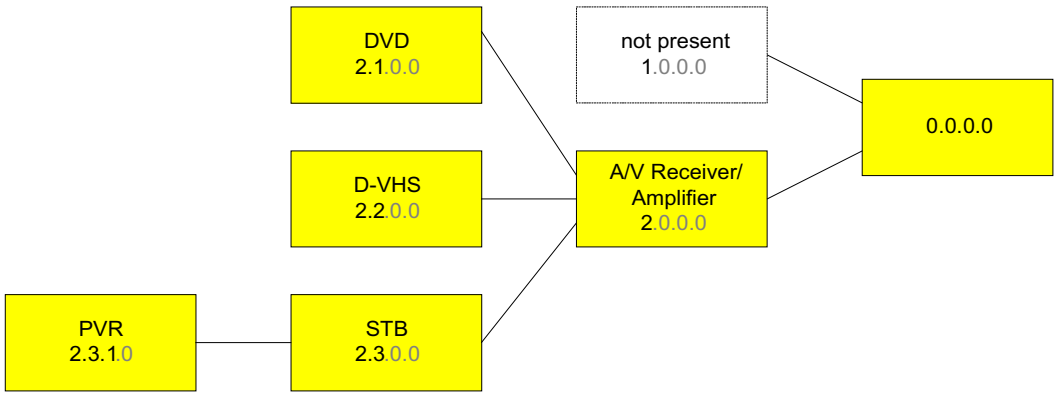

Figure 8-3 Addresses within an HMDI cluster

IPR2024-001429
HP – EX1010, Page 98 of 193

8.7.3 Discovery Algorithm

The following algorithm is used to allocate the physical address of each device whenever HPD is de-asserted or upon power-up:

```
Disable assertion of HPD to all source (child) devices
Label all possible connections to source devices uniquely starting
    from connection_label = 1
If I am root
    Set my_address to 0.0.0.0
Else
    Wait for HPD from sink
    Query sink for my_address of my connection (Section 8.7.4)
    The device shall retain this physical address until HPD is
        removed (or the device is powered off).
End if
If device has connections for source (child) devices then
    If device has separate EDIDs for each source (child) connection then
        If my_address ends with 0 then
            Set all child_addresses to my_address with the first 0 being
                replaced with the appropriate connection_label.
        Else (i.e. beyond the fifth layer of the tree)
            Set all child_addresses to F.F.F.F
        End if
    Else
        Set all child_addresses to my_address
    End if
    Write child_address to HDMI VSDB in EDID for each source (child) connection
End if
Allow HPD to be asserted for source devices
```

8.7.4 HDMI Sink Query

A Source shall determine its physical address (my_address) by checking the HDMI Vendor Specific Data Block (see Section 8.3.2) within the EDID. The fourth and fifth bytes of this 5 byte structure contain the physical address (fields A, B, C, D).

IPR2024-001429
HP – EX1010, Page 99 of 193

9 Content Protection

9.1 Recommendation

Content protection capability is recommended for all HDMI compliant devices. An HDMI compliant Source should protect all of the protected audiovisual data. Amongst adequate copy protection technologies which are compatible with HDMI, HDCP is available.

9.2 HDCP Implementations

HDCP implementations for HDMI shall adhere to HDCP specification version 1.10.

IPR2024-001429
HP – EX1010, Page 100 of 193

Appendix A Repeater

A.1 Repeater Functions

A Repeater is defined as a device with one or more HDMI inputs and one or more HDMI outputs and a retransmission function.

A Repeater has at least one of following functions:

- Repeat function:
  Single-input, single-output devices. Used primarily for cable extension.
- Switch function:
  Multiple-input, single-output devices. Used primarily to select among multiple Sources.
- Distributor function:
  Single-input, multiple-output devices, where only one output is active. Used primarily to select among multiple displays or Sinks.
- Duplicator function:
  Single-input, multiple-output devices, where more than one output is active. Used for signal distribution.

Combinations of the above, for instance, multiple-input, multiple-output devices, incorporating both input selection and output selection or signal distribution are allowed.

In all cases, each HDMI input shall fulfill all of the requirements of an HDMI Sink when it is connected with an active sink device, and each HDMI output shall fulfill all of the requirements of an HDMI Source when it is connected with an active source.

The E-EDID presented by a Repeater should reflect the capabilities of the downstream Sink.

A.2 E-EDID Read Timing (Informative)

In terms of E-EDID handling, Repeaters will typically fall into one of the following categories.

- Stored E-EDID type: The Repeater stores an E-EDID data structure that typically consists of downstream Sink capabilities.
- Forwarding type: The Repeater does not store an E-EDID data structure. When an E-EDID read request comes from a Source, the Repeater forwards the read request to a Sink. The E-EDID data from the Sink is then forwarded back to the Source.

An HDMI cluster may have several Repeaters between a Source and a Sink. To minimize the impact to the E-EDID reading time, each Repeater in the chain should minimize the added delay.

For example, the delay added by a Forwarding type Repeater should be no more than 4 msec per 16-byte read.

A stored E-EDID type Repeater should be able to send a 256 byte E-EDID within 150 msec when a Source issues sixteen 16-byte read requests. This means that a 16-byte read request would be completed within approximately 10 msec.

IPR2024-001429
HP – EX1010, Page 101 of 193

Appendix B Type B Connector Usage

B.1 Exception To Audio Format Support Requirement

Sources are not required to carry audio when all of the following conditions are met:

- Source is required by the HDMI Specification or associated agreements to use the Type B connector, and,
- Source has alternate default or user selectable audio outputs, and,
- Source can ensure that the appropriate audio stream is being delivered to the alternate audio outputs.

In order to guarantee rendering of video from Sources that do not fully support HDMI audio, the following condition shall be met:

- Sinks that are capable of supporting an HDMI video format when it is accompanied by audio shall also support that format when it is not accompanied by audio.

It is strongly recommended that a display device, when receiving an HDMI video signal without audio, temporarily indicate to the user that there is no audio accompanying the stream.

B.2 HDMI Dual-Link Architecture

HDMI dual-link architecture is compatible with DVI 1.0 dual-link architecture. Refer to section 3.1.5 of the DVI 1.0 specification.

IPR2024-001429
HP – EX1010, Page 102 of 193

Appendix C Compatibility With DVI

C.1 Requirement for DVI Compatibility

All HDMI Sources shall be compatible with DVI 1.0 compliant sink devices (i.e. “monitors” or “displays”) through the use of a passive cable converter. Likewise, all HDMI Sinks shall be compatible with DVI 1.0 compliant sources (i.e. “systems” or “hosts”) through the use of a similar cable converter.

When communicating with a DVI device, an HDMI device shall operate according to the DVI 1.0 specification, with the following exception – these devices are not required to comply with DVI 1.0 rules regarding:

- Monitor scaling requirements [refer to Section 2.2.8.2 of the DVI specification – superceded by HDMI specifications]
- Physical Interconnect specifications [refer to Chapter 5 of the DVI specification – superceded by HDMI specifications]
- System Low Pixel Format Support Requirements [refer to Section 2.2.4 of the DVI specification – superceded by HDMI specifications]

Furthermore, for HDMI devices which would not otherwise have a “BIOS” or “operating system” there are the following additional exceptions:

- “BIOS” requirements [refer to Section 2.2.4 of the DVI specification]
- “Operating system” requirements [refer to Section 2.2.2 and Section 2.2.9 of the DVI specification]
- “System level event” requirements [refer to Section 2.2.9.1 of the DVI specification]
- Power management requirements [refer to Section 2.4 of the DVI specification]

C.2 HDMI Source Requirements

When communicating with a DVI sink device, an HDMI Source shall operate in a mode compatible with that device. This requires that the Source operate under the following limitations:

- Video pixel encoding shall be RGB.
- No Video Guard Bands shall be used.
- No Data Islands shall be transmitted.

An HDMI Source may only transmit Video Data Periods without Guard Bands when communicating to a DVI sink device or during the process of determining if the sink device is HDMI capable.

An HDMI Source, upon power-up, reset or detection of a new sink device, shall assume that the sink device operates under DVI 1.0 limitations. An HDMI Source shall determine if the sink device is an HDMI Sink by following the rule(s) described in Section 8.3.3. Upon detection of an HDMI Sink, the HDMI Source shall follow all of the HDMI Source-related requirements specified in this document.

All electrical and physical specifications in Section 4 shall be followed by the HDMI Source even when communicating with a DVI sink device.

IPR2024-001429
HP – EX1010, Page 103 of 193

C.3 HDMI Sink Requirements

When connected to a DVI source device, an HDMI Sink shall operate as a DVI 1.0 compliant sink with the exceptions outlined in Section C.1 above.

A DVI source device will always be restricted in the following ways:

- Only RGB pixel encoding is used.
- There is no Guard Band on the Video Data Period.
- There are no Data Islands transmitted.

An HDMI Sink, upon power-up, reset or detection of a new source device, shall assume that the source device is limited to the above behavior. Upon the detection of an indication that the source is HDMI-capable, the HDMI Sink shall follow all of the HDMI Sink-related requirements specified in this document.

All electrical and physical specifications in Section 4 of the HDMI Specification shall be followed by the HDMI Sink even when communicating with a DVI source device.

C.4 Type A to DVI Adapter Cable [Informative]

Table C-1 Wire Categories

Category	Description
A	TMDS Signal Wire
B	TMDS Shield
C	Control
D	Control Ground
N.C.	No connect (no wire)
5V	5 Volts Power Wire

IPR2024-001429
HP – EX1010, Page 104 of 193

Table C-2 Type A-to-DVI-D Cable Wire Assignment [Informative]

Type A pin	Signal Name	Wire	DVI-D pin
1	TMDS Data2+	A	2
2	TMDS Data2 Shield	B	3
3	TMDS Data2–	A	1
4	TMDS Data1+	A	10
5	TMDS Data1 Shield	B	11
6	TMDS Data1–	A	9
7	TMDS Data0+	A	18
8	TMDS Data0 Shield	B	19
9	TMDS Data0–	A	17
10	TMDS Clock+	A	23
11	TMDS Clock Shield	B	22
12	TMDS Clock–	A	24
15	SCL	C	6
16	DDC Data	C	7
17	DDC/CEC Ground	D	15
18	+5V Power	5V	14
19	Hot Plug Detect	C	16
13	CEC	N.C.	
14	Reserved (in cable but N.C. on device)	N.C.	
	TMDS Data 4-	N.C.	4
	TMDS Data 4+	N.C.	5
	TMDS Data 3-	N.C.	12
	TMDS Data 3+	N.C.	13
	TMDS Data 5-	N.C.	20
	TMDS Data 5+	N.C.	21
	No Connect	N.C.	8

IPR2024-001429
HP – EX1010, Page 105 of 193

C.5 Type B to DVI Adapter Cable [Informative]

Table C-3 Type B to DVI-D Cable Wire Assignment [Informative]

Type B pin	Pin Assignment	Wire	DVI-D pin
1	TMDS Data2+	A	2
2	TMDS Data2 Shield	B	3
3	TMDS Data2-	A	1
4	TMDS Data1+	A	10
5	TMDS Data1 Shield	B	11
6	TMDS Data1-	A	9
7	TMDS Data0+	A	18
8	TMDS Data0 Shield	B	19
9	TMDS Data0-	A	17
10	TMDS Clock+	A	23
11	TMDS Clock Shield	B	22
12	TMDS Clock-	A	24
13	TMDS Data5+	A	21
14	TMDS Data5 Shield	B	19
15	TMDS Data5-	A	20
16	TMDS Data4+	A	5
17	TMDS Data4 Shield	B	3
18	TMDS Data4-	A	4
19	TMDS Data3+	A	13
20	TMDS Data3 Shield	B	11
21	TMDS Data3-	A	12
25	SCL	C	6
26	DDC Data	C	7
27	DDC/CEC Ground	D	15
28	+5V Power	5V	14
29	Hot Plug Detect	C	16
22	CEC	N.C.	
23	Reserved	N.C.	
24	Reserved	N.C.	
	No Connect	N.C.	8

END OF DOCUMENT

IPR2024-001429
HP – EX1010, Page 106 of 193

Supplement 1

Consumer Electronics Control (CEC)

IPR2024-001429
HP – EX1010, Page 107 of 193

CEC Table of Contents

CEC Page

CEC 1 INTRODUCTION **1**

CEC 1.1 Normative references **1**

CEC 1.2 Informative References **1**

CEC 2 DEFINITIONS **2**

CEC 2.1 Conformance Levels **2**

CEC 2.2 Glossary of Terms **2**

CEC 2.3 Usages and Conventions **3**
CEC 2.3.1 State Diagrams 3
CEC 2.3.2 Message Flow Diagrams 3
CEC 2.3.3 Notation 3

CEC 3 FEATURE OVERVIEW **4**

CEC 4 ELECTRICAL SPECIFICATION **5**

CEC 5 SIGNALING AND BIT TIMINGS **6**

CEC 5.1 CEC line usage **6**

CEC 5.2 Bit timing **6**
CEC 5.2.1 Start bit timing 6
CEC 5.2.2 Data bit timing 6

CEC 6 FRAME DESCRIPTION **9**

CEC 6.1 Header/Data Block description **9**
CEC 6.1.1 EOM (End of Message) 9
CEC 6.1.2 ACK (Acknowledge) 9
CEC 6.1.3 Header Block Details 10

CEC 7 RELIABLE COMMUNICATION MECHANISMS **11**

CEC 7.1 Frame Re-transmissions **11**

CEC 7.2 Flow Control **11**

CEC 7.3 Frame Validation **11**

CEC 7.4 CEC Line Error Handling **11**

CEC 8 PROTOCOL EXTENSIONS **12**

CEC 9 CEC ARBITRATION **13**

CEC 9.1 Signal Free Time **13**

IPR2024-001429
HP – EX1010, Page 108 of 193

CEC 9.2 Message Time Constraints 13

CEC 10 DEVICE CONNECTIVITY AND ADDRESSING 14

CEC 10.1 Physical Address Discovery 14

CEC 10.2 Logical Addressing 14
CEC 10.2.1 Logical Address Allocation 15

CEC 11 SWITCH REQUIREMENTS 17

CEC 11.1 CEC Switch 17

CEC 11.2 Non-CEC Switch 17
CEC 11.2.1 Switches with 1 EDID 17
CEC 11.2.2 Switches with Multiple EDIDs 18

CEC 12 HIGH LEVEL PROTOCOL 19

CEC 12.1 Source Declaration 19

CEC 12.2 Protocol general rules 19

CEC 12.3 Feature Abort 19

CEC 13 CEC FEATURES DESCRIPTION 21

CEC 13.1 One Touch Play 21
CEC 13.1.1 Messages 21
CEC 13.1.2 Feature Description 21

CEC 13.2 System Standby 22
CEC 13.2.1 Messages 22
CEC 13.2.2 Feature Description 22
CEC 13.2.3 Exceptions 22

CEC 13.3 Preset Download 22
CEC 13.3.1 Messages 22
CEC 13.3.2 Feature Description 22
CEC 13.3.3 Exceptions 24
CEC 13.3.4 State Diagrams 25

CEC 13.4 One Touch Record 26
CEC 13.4.1 Messages 26
CEC 13.4.2 Feature Description 26

CEC 13.5 Timer Programming 27
CEC 13.5.1 Messages 27
CEC 13.5.2 Feature Description 27

CEC 13.6 System Information 28
CEC 13.6.1 Messages 28
CEC 13.6.2 Feature Description 29
CEC 13.6.3 Additional Information 30

IPR2024-001429
HP – EX1010, Page 109 of 193

CEC 13.7 Deck Control 30
CEC 13.7.1 Messages 30
CEC 13.7.2 Feature Description 30

CEC 13.8 Tuner Control 31
CEC 13.8.1 Messages 31
CEC 13.8.2 Feature Description 31

CEC 13.9 Vendor Specific Commands 32
CEC 13.9.1 Messages 32
CEC 13.9.2 Feature Description 32

CEC 13.10 OSD Status Display 32
CEC 13.10.1 Messages 32
CEC 13.10.2 Feature Description 33

CEC 13.11 Device Menu Control 33
CEC 13.11.1 Messages 33
CEC 13.11.2 Feature Description 33

CEC 13.12 Routing Control 34
CEC 13.12.1 Messages 34
CEC 13.12.2 Feature Description 34

CEC 13.13 Remote Control Pass Through 35
CEC 13.13.1 Messages 35
CEC 13.13.2 Feature Description 35

CEC 13.14 Device OSD Name Transfer 36
CEC 13.14.1 Messages 36
CEC 13.14.2 Feature Description 36

CEC 14 DEVICE STATES 37
CEC 14.1.1 Device States 37
CEC 14.1.2 State Changes 37
CEC 14.1.3 All Devices 37
CEC 14.1.4 TV 38
CEC 14.1.5 Recording Device 39
CEC 14.1.6 Playback Device 39
CEC 14.1.7 Menu Providing Device 39
CEC 14.1.8 Tuner Device 39
CEC 14.1.9 Timer Setting Device 40

CEC 15 MESSAGE DESCRIPTIONS 41

CEC 16 MESSAGE DEPENDENCIES 56

CEC 17 OPERAND DESCRIPTIONS 65

IPR2024-001429
HP – EX1010, Page 110 of 193

CEC Figures

CEC Figure 1 Example State Diagram 3
CEC Figure 2 Example Message Flow Diagram..... 3
CEC Figure 3 Start bit pulse format showing minimum and maximum tolerances..... 6
CEC Figure 4 Timing diagrams for both bit states 7
CEC Figure 5 Timing Diagram for Follower Asserted Bit (Logical 0)..... 8
CEC Figure 6 Block Structure 9
CEC Figure 7 Header Block 10
CEC Figure 8 Logical Address Allocation 16
CEC Figure 9 A device's connection state when it is beneath a 1 EDID non-CEC Switch ... 18
CEC Figure 10 A typical scenario illustrating the One Touch Play feature 21
CEC Figure 11 The message exchange for the Preset Download feature 23
CEC Figure 12 State transitions for the Preset Download feature..... 25
CEC Figure 13 A typical scenario for the One Touch Record feature..... 26
CEC Figure 14 Message exchange for the Timer Record Block Transfer process 27
CEC Figure 15 A typical scenario for setting a Timer Record Block..... 28
CEC Figure 16 Message exchange when downloading the TV's System Info..... 29
CEC Figure 17 A typical scenario when a system setting within the TV is modified 29
CEC Figure 18 A typical scenario for the Deck Control feature..... 31
CEC Figure 19 The messages sent in the Vendor Specific Commands feature 32
CEC Figure 20 Example message flow, when a CEC Switch is manually switched 35

IPR2024-001429
HP – EX1010, Page 111 of 193

CEC Tables

CEC Table 1 CEC Electrical Specifications 5
CEC Table 2 Frame Description 9
CEC Table 3 Signal Free Time 13
CEC Table 4 Logical Addresses 15
CEC Table 5 Message Descriptions 42
CEC Table 6 Message dependencies when receiving a message 57
CEC Table 7 Message dependencies when sending a message 61
CEC Table 8 Operand Descriptions. 66
CEC Table 9 User Control Codes 80
CEC Table 10 Broadcast System 81

IPR2024-001429
HP – EX1010, Page 112 of 193

CEC 1 Introduction

CEC is a protocol that provides high-level control functions between all of the various audiovisual products in a user's environment. This appendix describes the CEC protocol in the following order:

- An overview of the recommended features available in CEC.
- A Low Level Protocol Definition - Includes the electrical specification, signaling and bit timings and the frame description.
- A High Level Protocol Definition - Includes a detailed feature breakdown and individual message descriptions.

CEC 1.1 Normative references

[1n] ISO 639-1 Code for the representation of names of languages - Part 1: Alpha 2 code
http://xml.coverpages.org/languageIdentifiers.html - iso639

[2n] ITU-T E.164 – definition of country codes

CEC 1.2 Informative References

[1i] CENELEC, EN 50049-1:1997/A1:1998, Domestic and similar electronic equipment interconnection requirements: Peritelevision connector

[2i] CENELEC, EN 50157, Domestic and similar electronic equipment interconnection requirements: AV.link

EN 50157-1 : Part 1
EN 50157-2-1 : Part 2-1
EN 50157-2-2 : Part 2-2
EN 50157-2-3 : Part 2-3

[3i] IEEE std. 1394-1995 HIGH PERFORMANCE SERIAL BUS section 8.3.2.5.1 – example use of Company_id.

IPR2024-001429
HP – EX1010, Page 113 of 193

CEC 2 Definitions

CEC 2.1 Conformance Levels

Because CEC is optional, the conformance level in this appendix is only effective when the device supports CEC. For example, the word "shall" indicates a mandatory requirement for the CEC supporting devices. However, within the Features section (CEC 13) "shall" only indicates a requirement if the feature is implemented.

CEC 2.2 Glossary of Terms

Broadcast Message	This is a message, sent to logical address 15, on which all devices are expected to receive.
Clear	Set to an empty/undefined state.
Deck	The part of a recording device or playback device that provides playback functionality usually from a removable media.
Destination	The target device for a CEC message.
Follower	A device that has just received a CEC message and is required to respond to it.
Initiator	The device that is sending, or has just sent, a CEC message and, if appropriate, is waiting for a follower to respond.
Logical address	A unique address assigned to each device (see section CEC 10.2)
Menu Providing Device	A non-display device that may render a menu on TV.
Playback device	A device that has the ability to play media, e.g. a DVD Player.
Recording device	A device that has the ability to record a source such as an internal preset or an external connection.
Source Device	A device that is currently providing an AV stream via HDMI.
Tuner Device	A device that contains a tuner, e.g. a STB or a Recording Device.
Timer Setting Device	A device that has the ability to set the record timer blocks of a recording device.
TV	A device with HDMI input that has the ability to display the input HDMI signal. Generally it has no HDMI output.

IPR2024-001429
HP – EX1010, Page 114 of 193

CEC 2.3 Usages and Conventions

CEC 2.3.1 State Diagrams

State diagrams describe behavior in terms of device states and events or actions. In these diagrams, the ovals represent device states and the arrows represent events and/or actions that move the device from one state to another state.

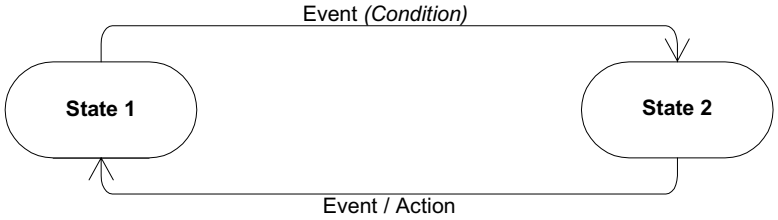

CEC Figure 1 Example State Diagram

CEC 2.3.2 Message Flow Diagrams

Message Flow Diagrams show sequences of messages that occur between 2 devices.

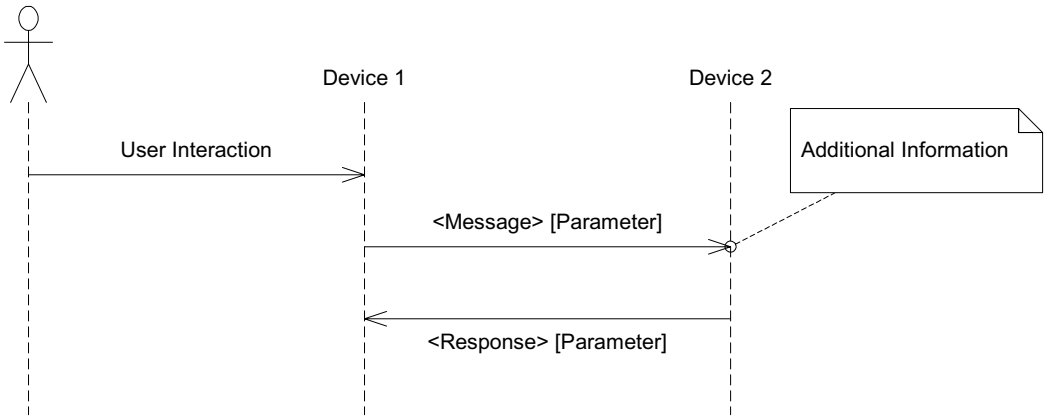

CEC Figure 2 Example Message Flow Diagram

CEC 2.3.3 Notation

Within the CEC specification there are a number of notations:

<xxx> xxx is an opcode for a message, which is defined in section CEC 15

[yyy] yyy is a data item, which is defined in section CEC 17.

“zzz” zzz is a constant and is a possible value for a data item in section CEC 17.

N{….} indicates the item within the braces is repeated N times, this is used mainly in section CEC 17.

IPR2024-001429
HP – EX1010, Page 115 of 193

CEC 3 Feature Overview

CEC provides a number of recommended features designed to enhance the functionality and interoperability of devices within an HDMI system. This section gives an overview of these features.

- **One Touch Play** - Allows a device to be played and become the active source with a single button press.
- **System Standby** - Enables the user to switch all devices to standby with one button press.
- **Preset Transfer** - Enables any tuner device to download the same set of presets as the TV. It is used to auto configure a devices presets so no manual setup is required.
- **One Touch Record** - Offers a What You See Is What You Record (WYSIWYR) facility, meaning that whatever is shown on the TV screen is recorded on a selected recording device.
- **Timer Programming** - Allows a device (e.g. the TV) to set a timer recording on a recording device.
- **System Information** - Queries the system to determine device addresses and configurations (e.g. language and country)
- **Deck Control** - Enables a device to control (e.g. play, fast forward etc.) and interrogate a playback device (a deck).
- **Tuner Control** - Allows a device to control the tuner of another device.
- **Vendor Specific Commands** - Allows a set of vendor-defined commands to be used between devices of that vendor.
- **OSD Display** - Enables a device to use the on-screen display of the TV to display text strings.
- **Device Menu Control** - Enables a device to control the menu of another device by passing through user interface commands.
- **Routing Control** - Allows the control of CEC Switches for streaming of a new source device.
- **Remote Control Pass Through** - Enables remote control commands to be passed through to other devices within the system.
- **Device OSD Name Transfer** - Enables devices to upload their preferred OSD name to the TV. The TV can then use this name in any menus associated with that device.

IPR2024-001429
HP – EX1010, Page 116 of 193

CEC 4 Electrical Specification

The electrical specifications define CEC such that a maximum of 10 devices may operate together in the worst-case scenario. In practice, many more may be expected to operate together as the worst case is highly improbable.

CEC Table 1 describes the electrical specifications for CEC.

CEC Table 1 CEC Electrical Specifications

Description	**Measurement Method**	**Value**
Maximum voltage slew rate	Open Circuit	$\frac{dv}{dt} \leq \lvert 0.1 \rvert$ V/µs
	2700 ohms ± 5% load to 3.3V	
Maximum Output Voltage Logic ‘0’	2700 ohms ± 5% load to 3.3V	600 mV
Minimum Output Voltage Logic ‘0’	2700 ohms ± 5% load to 3.3V	0 V
Maximum Output Voltage Logic ‘1’	27k ohms ± 5% load to 2.7V	3.6 V
Minimum Output Voltage Logic ‘1’	27k ohms ± 5% load to 2.7V	2.5V
Input Voltage Threshold Logic ‘0’	CEC voltage set to 800mV	Logic ‘0’
Input Voltage Threshold Logic ‘1’	CEC voltage set to 2.0V	Logic ‘1’
Max rise time	From 10% to 90%	250 µs
Max fall time	From 90% to 10%	50 µs
Internal device pull-up to +3.3V ±10%		27k ohms ±10%

All values assume a nominal +3.3V signaling level.

IPR2024-001429
HP – EX1010, Page 117 of 193

CEC 5 Signaling and Bit Timings

All transactions on the CEC line consist of an initiator and one or more followers. The initiator is responsible for sending the message structure and the data. The follower is the recipient of any data and is responsible for setting any acknowledgement bits.

The following sections describe the timing that is used by the initiator.

CEC 5.1 CEC line usage

A message is conveyed over the control signal line in a single frame; a frame is a self-contained unit consisting of a start bit followed by a number of data bits.

An initiator first has to test that the control signal line is free for use (described below). After that it generates a high to low transition on the CEC line, followed by a series of pulses comprising data bits whose starting point is defined by a high to low transition.

The initiator provides bit timing and bit leading edges. Only one initiator is allowed at any one time. A control signal line arbitration mechanism avoids conflict when more than one initiator begins transmitting at the same time.

CEC 5.2 Bit timing

CEC 5.2.1 Start bit timing

The pulse format of the start bit is shown in CEC Figure 3. It is unique and identifies the start of a frame.

The start bit has to be validated by its low duration (a) and its total duration (b).

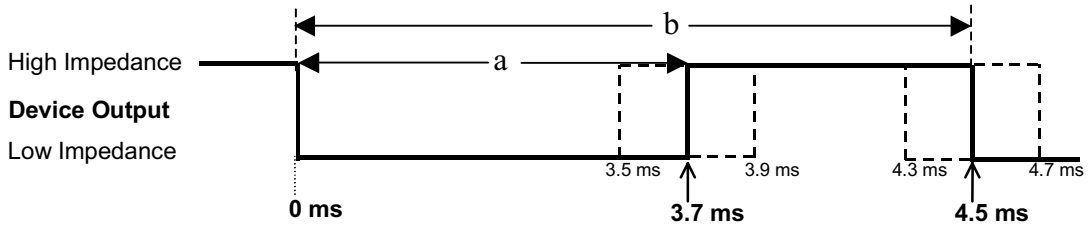

CEC Figure 3 Start bit pulse format showing minimum and maximum tolerances

CEC 5.2.2 Data bit timing

All remaining data bits in the frame, after the start bit, have consistent timing. There are, however, two types of bits; an initiator asserted bit and a follower asserted bit. All bits apart from the acknowledge bit are asserted by the initiator. CEC Figure 4 shows both logical 1 and logical 0 timing diagrams for an initiator asserted bit.

The high to low transition at the end of a data bit is the start of the next data bit and only occurs if there is a following data bit; after transmission of the final bit the CEC line remains high.

IPR2024-001429
HP – EX1010, Page 118 of 193

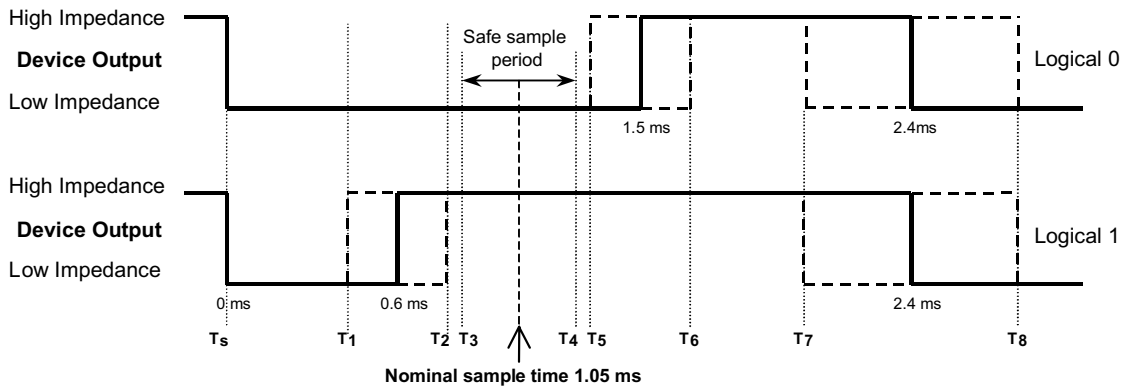

T_S	**0 ms**	The bit start event.
T_1	**0.4 ms**	The earliest time for a low - high transition when indicating a logical 1.
T_2	**0.8 ms**	The latest time for a low - high transition when indicating a logical 1.
T_3	**0.85 ms**	The earliest time it is safe to sample the signal line to determine its state.
T_4	**1.25 ms**	The latest time it is safe to sample the signal line to determine its state.
T_5	**1.3 ms**	The earliest time a device is permitted return to a high impedance state (logical 0).
T_6	**1.7 ms**	The latest time a device is permitted return to a high impedance state (logical 0).
T_7	**2.05 ms**	The earliest time for the start of a following bit.
T_8	**2.75 ms**	The latest time for the start of a following bit.

CEC Figure 4 Timing diagrams for both bit states

CEC Figure 5 shows an example bit with both initiator and follower where the follower may assert the bit to a logical 0 to acknowledge a data block. The initiator outputs a logical 1, thus allowing the follower to change the CEC state by pulling the control line low for the duration of the safe sample period.

IPR2024-001429
HP – EX1010, Page 119 of 193

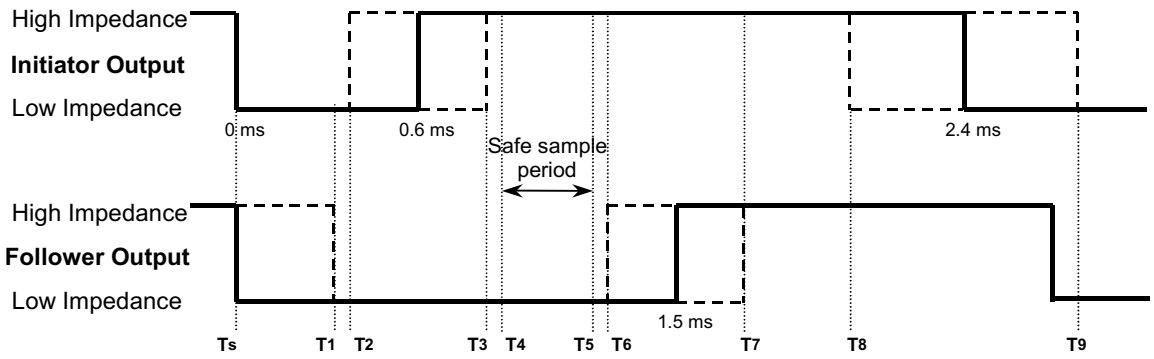

T_S	**0 ms**	The bit start event.
T_1	**0.35 ms**	The latest response time for a follower to go to the low impedance state.
T_2	**0.4 ms**	The earliest the initiator can return to high impedance when transmitting a logical 1.
T_3	**0.8 ms**	The latest the initiator can return to high impedance when transmitting a logical 1.
T_4	**0.85 ms**	The earliest time at which the bit state on the CEC line is valid for reading.
T_5	**1.25 ms**	The latest time at which the bit state on the CEC line is valid for reading.
T_6	**1.3 ms**	The earliest time the follower is permitted return to a high impedance state.
T_7	**1.7 ms**	The latest time the follower is permitted return to a high impedance state.
T_8	**2.05 ms**	The earliest time for the start of a following bit.
T_9	**2.75 ms**	The latest time for the start of a following bit.

CEC Figure 5 Timing Diagram for Follower Asserted Bit (Logical 0)

IPR2024-001429
HP – EX1010, Page 120 of 193

CEC 6 Frame Description

The following table describes the complete CEC frame; the details of each block of the frame are given in the subsequent sections.

CEC Table 2 Frame Description

Name	Description	Value
Start	Special start 'bit'	N/A
Header Block	Source and destination addresses (see CEC Figure 7)	See CEC Table 4
Data Block 1 (op code block)	Op code (Optional)	See CEC Table 5
Data Block 2…. (operand blocks)	Operand(s) specific to op code (Optional, depending on op code)	See CEC Table 5 and CEC Table 8

CEC 6.1 Header/Data Block description

Both Data Block and Header Block have the same basic structure, as shown in CEC Figure 6.

Header/Data Block									
7	6	5	4	3	2	1	0	-	-
Information bits								EOM	ACK

CEC Figure 6 Block Structure

The information bits are data, op codes or addresses, dependent on context. The control bits, EOM and ACK, are always present and always have the same usage.

CEC 6.1.1 EOM (End of Message)

The EOM bit is used to indicate if this is the final block in the message.

A '0' bit specifies that one or more data blocks follow.

A '1' bit specifies that the message is complete.

In the event that a message contains additional data blocks after an EOM is indicated, the follower should ignore the additional blocks.

CEC 6.1.2 ACK (Acknowledge)

The ACK bit is used by follower(s) to acknowledge the data or header block. It is always set to 1 by the initiator. It operates in one of two modes:

IPR2024-001429
HP – EX1010, Page 121 of 193

For messages addressed to a single device:

- A follower that reads its own address in the destination address field shall acknowledge with a ‘0’ ACK bit.
- All other devices shall generate a ‘1’ ACK bit (i.e. do nothing).
- A ‘0’ read by the initiator therefore indicates a successful transmission of the data or header block.

For broadcast messages the sense of the ACK bit is inverted to allow for a single device to reject a message:

- All followers shall acknowledge with a ‘1’ ACK bit.
- A ‘1’ read by the initiator therefore indicates that no device has rejected the data or header block – the message transmission can therefore continue if required.
- A ‘0’ read by the initiator therefore indicates that one or more devices have rejected the message.

CEC 6.1.3 Header Block Details

The header block consists of the source logical address field, the destination logical address field, the end of message bit (EOM) and the acknowledge bit (ACK) as shown in CEC Figure 7. The addresses for the devices are specified in CEC Table 4.

Header Block									
3	2	1	0	3	2	1	0	-	-
Initiator				Destination				EOM	ACK

CEC Figure 7 Header Block

The initiator logical address field is used to identify the initiator of the current frame. The logical address of the initiator is written in this field (see CEC 10.2). The field consists of bits one to four of the header block, most significant bit first.

The destination logical address field is used to identify the destination of the current frame. The logical address of the destination is written in this field (see CEC 10.2). A special address (0b1111) is used for broadcast messages. The field consists of bits five to eight of the header block, most significant bit first.

A message with the EOM bit set in the Header Block can be used to ‘ping’ other devices, to ascertain if they are active.

IPR2024-001429
HP – EX1010, Page 122 of 193

CEC 7 Reliable Communication Mechanisms

There are three mechanisms to provide a reliable communications medium for the transfer of frames:

- Frame re-transmissions increase the chance of a successful message transfer.
- Flow control ensures that communication only progresses as fast as the slowest follower.
- Frame validation.

Given these mechanisms and the active ACK method, a message transmitted and acknowledged should be assumed correctly received. A message that does not result in a <Feature Abort> can be assumed to have been acted upon. It is suggested that the receiving device can assume this after 1 second. Generally however, the <Feature Abort> will be received within around 100ms.

CEC 7.1 Frame Re-transmissions

A frame is considered lost and therefore may be re-transmitted under the following conditions:

- If a data block is not acknowledged in a directly addressed message.
- If a data block is negatively acknowledged in a broadcast message.
- If the initiator detects low impedance on the CEC line when it is transmitting high impedance and is not expecting a follower asserted bit.

Re-transmission can be attempted up to 5 times for a single message and shall be attempted at least once. The re-try shall be after a signal free time as described in CEC Table 3.

CEC 7.2 Flow Control

To provide flow control, a receiving device may negatively acknowledge any data or header block it is at present unable to process. A negative acknowledge will cause re-transmission by the initiator.

CEC 7.3 Frame Validation

A follower will ignore a frame if the number of operands is less than the number specified for that op code.

CEC 7.4 CEC Line Error Handling

It is the responsibility of all devices acting as followers to detect the existence of spurious pulses on the control signal line and notify all other devices (primarily the initiator) that a potential error has occurred.

An error is defined as a period between falling edges that is less than a minimum bit period (i.e. too short to be a valid bit).

Errors are notified by the follower generating a low bit period on the control signal line of 1.5 times the nominal data bit period. After such an error notification the original initiator should stop sending its current frame and re-try later.

IPR2024-001429
HP – EX1010, Page 123 of 193

CEC 8 Protocol Extensions

In order to allow for extensions to the protocol in future releases of the specification, the current opcodes and parameters can be extended by adding further parameters onto them. If an older CEC node receives a message with more operands than expected, it should ACK the additional operands and simply ignore them, thus allowing extensions to already existing commands.

For entirely new commands, new opcodes can be allocated.

For entirely new device types, new addresses may be allocated.

IPR2024-001429
HP – EX1010, Page 124 of 193

CEC 9 CEC arbitration

Arbitration for the CEC line ensures collisions are spotted and a reliable message layer can be achieved.

All devices that wish to transmit a frame onto the CEC line have to ensure that it has been inactive for the signal free time, see CEC Table 3.

A device that has lost arbitration shall stop transmitting and become a follower. The device shall then wait for the CEC line to be inactive for the signal free time period as specified in CEC Table 3, before attempting to send another message.

CEC line arbitration commences with the leading edge of the start bit and continues until the end of the initiator address bits within the header block. During this period the initiator shall monitor the CEC line and if whilst in high impedance state it detects low impedance then it shall assume that it has lost the arbitration to a second initiator.

It should be noted that this process gives priority to the logical address with the most leading zeros and, ultimately, the TV.

CEC 9.1 Signal Free Time

Before attempting to transmit or re-transmit a frame, a device shall ensure that the CEC line has been inactive for a number of bit periods. This signal free time is defined as the time since the start of the final bit of the previous frame.

The length of the required signal free time depends on the current status of the control signal line and the initiating device. The different signal free times required are summarized in the following table:

CEC Table 3 Signal Free Time

Precondition	**Signal Free Time**
Present initiator wants to send another frame immediately after its previous frame	7 bit periods
New initiator wants to send a frame	5 bit periods
Previous attempt to send frame unsuccessful	3 bit periods

CEC 9.2 Message Time Constraints

There are certain time constraints for messages that should be obeyed at application level. These are a desired maximum response time of 200ms and a required maximum response time of 1 second.

IPR2024-001429
HP – EX1010, Page 125 of 193

CEC 10 Device Connectivity and Addressing

CEC is a protocol based on a bus system and therefore cannot alone ascertain the physical connectivity of the network. The mechanism defined in section 8.7 uses DDC to allocate physical addresses to devices in the network.

All CEC devices therefore have both a physical and logical address, whereas non-CEC devices only have a physical address.

CEC 10.1 Physical Address Discovery

The algorithm defined in 8.7.3 is used to allocate the physical address of each device.

Whenever a new physical address is discovered, a CEC device shall:

- allocate the logical address (see CEC 10.2.1)
- report the association between its logical and physical addresses by broadcasting <Report Physical Address>.

This process allows any node to create a map of physical connections to logical addresses.

CEC 10.2 Logical Addressing

Each device appearing on the control signal line has a unique logical address. This address defines a device type as well as being a unique identifier. These are specified in CEC Table 4.

If a physical device contains the functions of more than one logical device then it should take the logical addresses for each of those logical devices. It is allowed for a device to declare the functionality of another device by using a different logical address. For example a recordable DVD device may take the address 4 or 8 to expose only the functionality of a standard DVD device.

IPR2024-001429
HP – EX1010, Page 126 of 193

CEC Table 4 Logical Addresses

Address	Device
0	TV
1	Recording Device 1
2	Recording Device 2
3	STB1
4	DVD1
5	Audio System
6	STB2
7	STB3
8	DVD2
9	Recording Device 3
10	Reserved
11	Reserved
12	Reserved
13	Reserved
14	Free Use
15	Unregistered (as initiator address) Broadcast (as destination address)

CEC 10.2.1 Logical Address Allocation

Note that a logical address should only be allocated when a device has a valid physical address.

Only the device at physical address 0.0.0.0 may take logical address TV (0). A TV at any other physical address must take either the 'Free Use' (14) or 'Unregistered' (15) logical addresses.

The 'Free Use' (14) address may be used for any device type.

Reserved addresses shall not be used at present and is reserved for future extensions to this specification.

Where more than one possible logical address is available for the given device type (e.g. STB1, STB2, etc.), an address allocation procedure shall be carried out by a newly connected device. The device takes the first allocated address and sends a polling message to the same address (e.g. STB1 STB1). If the polling message is not acknowledged, then the device stops the procedure and retains that address.

If the first address is acknowledged, then the device takes the next address and repeats the process (e.g. STB2 STB2). Again, if the message is not acknowledged, the device keeps that address.

IPR2024-001429
HP – EX1010, Page 127 of 193

This procedure continues until all possible type specific addresses have been checked; if no free addresses are available the device should take the unregistered address (15).

A device may lose its logical address when it is disconnected or switched off. However, it may remember its logical address, so that the next time it is reconnected, it can begin the polling process at its previous logical address and try each other allowable logical address in sequence before taking the unregistered address. For example if an STB that was previously allocated address STB2 is reconnected, it would poll STB2, STB3 and STB1 before taking the unregistered address.

If a device loses its physical address at any time (e.g. it is unplugged) then its logical address shall be set to unregistered (15).

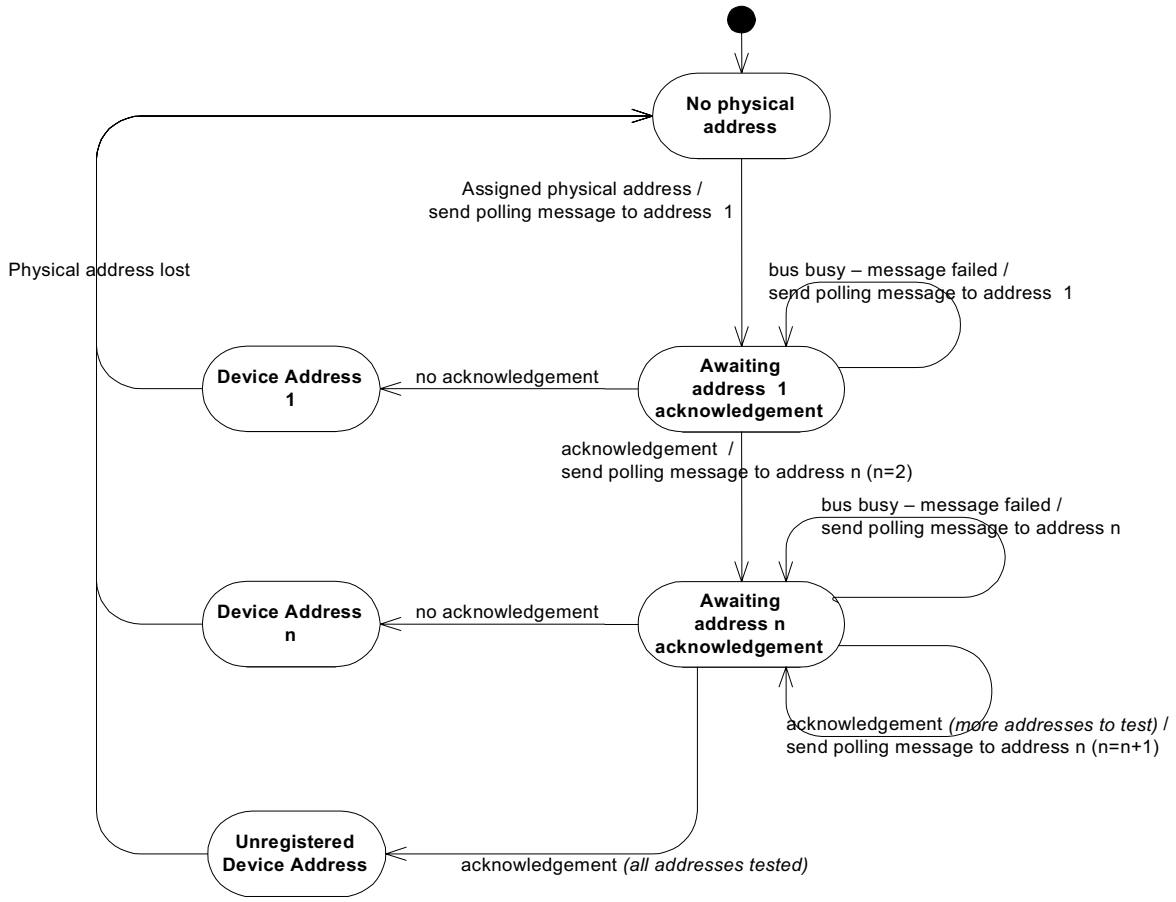

CEC Figure 8 Logical Address Allocation

IPR2024-001429
HP – EX1010, Page 128 of 193

CEC 11 Switch Requirements

One of the major uses of the physical address identification is to allow a switch to be controlled in order to enable a specific device to stream to the TV. This places requirements on both CEC and non-CEC compliant switches.

All switches will consist of a single switched TMDS connection, and a fully wired CEC connection to each source device. There are significant differences between a CEC Switch and a non-CEC Switch, which are identified below.

CEC 11.1 CEC Switch

A CEC Switch allocates a unique child_address for every connection below the switch. This means that any device connected to the switch will always have a valid physical address (assuming the switch itself has a valid physical address). Therefore, any device below the switch may take a logical address and can react to CEC messages in a normal way. The switch is effectively transparent and will enable all standard CEC communications in its connected source devices.

For CEC compliant switches, there is a requirement to react on <Active Source> and <Set Stream Path> messages. Both of these messages require the switch to change the connected source device according to the physical AV stream path indicated by the CEC message. These mechanisms allow a source device to configure the switches between itself and the TV to ensure that its output is displayed, or for the TV to specifically receive the output from a given device.

A CEC compliant device that is only a switch does not need to take a logical address; it uses the unregistered address for any communications.

It is possible that a user may change a CEC Switch manually. In this instance a CEC Switch shall send a <Routing Change> message to inform other devices about the change.

CEC 11.2 Non-CEC Switch

There are two types of non-CEC switches, those which have only one EDID for all source devices (or simply reflect the sink EDID), and those which have a separate EDID for all source devices. The rules for the operation of these two types of switch are different:

CEC 11.2.1 Switches with 1 EDID

A non-CEC-compliant switch may have a single child_address, which is always occupied by the currently switched device. Any other connected devices will have hot plug and so will have no physical address (and therefore can only use the unregistered logical address). These devices will, however, still see CEC messages as they will be connected to the CEC line and they may react to broadcast messages in the normal way (e.g. standby).

When a switch de-selects a device, that device will detect the removal of the ‘hot plug’ signal to indicate that its physical AV connection has been removed. It should immediately clear its physical and logical addresses. Each source device below the switch will detect the removal of the ‘hot plug’ signal to indicate they are no longer on the active AV Path and clear their addresses accordingly.

IPR2024-001429
HP – EX1010, Page 129 of 193

When a switch selects a device, that device will detect the ‘hot plug’ signal. It can then obtain a valid physical address from its sink and subsequently a logical address. The device should activate the hot plug signal to its source (child) devices (if any) to indicate that they should now request a physical address.

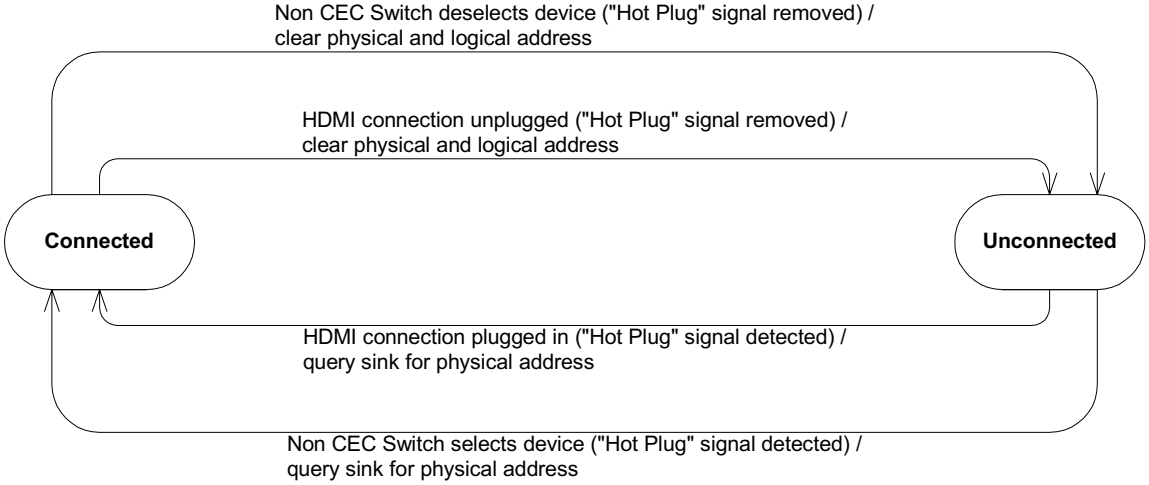

CEC Figure 9 A device’s connection state when it is beneath a 1 EDID non-CEC Switch

CEC 11.2.2 Switches with Multiple EDIDs

These should operate as CEC switches except that they do not send messages on, or monitor, the CEC line.

IPR2024-001429
HP – EX1010, Page 130 of 193

CEC 12 High Level Protocol

As described in the previous sections, messages consist of an op code and a number of parameters. This is the high level protocol.

This protocol can be described best by detailing the messages and the data types used for the parameters. These are detailed in CEC Table 5.

Although these tables explain the majority of the high level protocol, there are some special situations that require further explanation. These are given in the following sections.

CEC 12.1 Source Declaration

Before a device becomes a source, it should issue an <Active Source> message to declare its intention. Thus any presently active source can and should act appropriately.

CEC 12.2 Protocol general rules

A message that is defined as being valid only when directly addressed, shall be ignored if received as a broadcast message.

A message that is defined as being valid only when broadcast, shall be ignored if received as a directly addressed message.

All numbers greater than one byte are transmitted as bytes in big endian format.

All bit sequences are sent most significant bit first.

A follower shall respond to a message coming from any valid logical address between 0-14 unless otherwise stated.

A follower shall ignore a message coming from address 15 (unregistered), unless:

- that message invokes a broadcast response (e.g. <Start Preset Transfer>)
- the message has been sent by a CEC switch (a <Routing Change> or <Routing Information> message).
- the message is <standby>

CEC 12.3 Feature Abort

All devices shall support the message <Feature Abort>. It is used to allow devices to indicate if they do not support an op code that has been sent to them, if it is unable to deal with the message at present, of if there was something wrong with the transmitted frame at the high-level protocol layer.

Feature abort has two parameters, the opcode and a reason for its rejection of the frame.

IPR2024-001429
HP – EX1010, Page 131 of 193

The reaction to a faulty message by the follower depends on if the message was directed or broadcast:

For a broadcast message:

- A follower that receives a broadcast message which it does not support, ignores the received message, and does not send a <Feature Abort>.

For a directly addressed message:

- <Feature abort> is used as a response to any failure.

If an initiator wishes to attempt retransmission after receiving a <Feature Abort> it is suggested that it waits for 200ms. This will allow time for the follower to recover from the state that caused the initial <Feature Abort> message.

IPR2024-001429
HP – EX1010, Page 132 of 193

CEC 13 CEC Features Description

This section describes the message transfer and additional details for a number of common features enabled by CEC. Note that where a feature is supported, all messages within that feature should be implemented.

CEC 13.1 One Touch Play

CEC 13.1.1 Messages

The following messages are used for the One Touch Play feature:

<Active Source>, <Image View On>, <Text View On>

CEC 13.1.2 Feature Description

The One Touch Play feature allows a device to be played and become the active source with a single button press.

A device shall send the message <Image View On> to the TV to indicate that its output should be displayed on the screen. If the TV is in a Text Display state (e.g. Teletext) it should switch to the Image Display state. If a menu is being displayed on the TV it shall remain on screen.

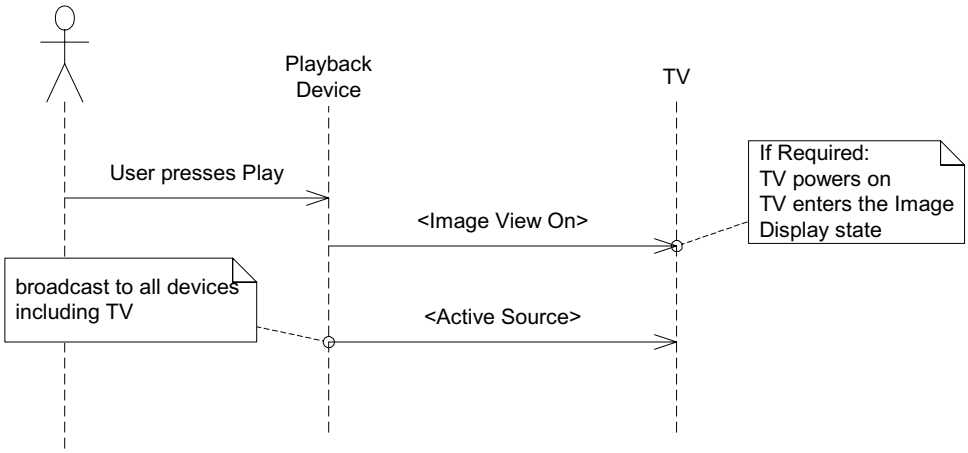

CEC Figure 10 A typical scenario illustrating the One Touch Play feature

A device may also send the message <Text View On>. This message has the same functionality as <Image View On> with the addition that any menus that the TV is displaying shall be removed.

Whenever a device becomes the new source device it should broadcast an <Active Source> message. The current active source device should then take appropriate action, for example, it may pause if it is playing media.

IPR2024-001429
HP – EX1010, Page 133 of 193

CEC 13.2 System Standby

CEC 13.2.1 Messages

The following message is used for the System Standby feature:

<Standby>

CEC 13.2.2 Feature Description

The message <Standby> can be used to switch one or more CEC devices to standby.

The whole system may be set to standby by broadcasting the <Standby> message.

A device can switch another single device into standby by sending the message <Standby> as a directly addressed message to it. It should only switch a single device into standby if it previously activated that device (brought it out of standby).

CEC 13.2.3 Exceptions

Devices can ignore <Standby> messages if they are in a state where going into standby is not sensible. For example if the device is actively involved in a recording as either the source or recording device it should ignore any requests to go into standby. It is up to the device implementer how ‘sensible’ is defined.

CEC 13.3 Preset Download

CEC 13.3.1 Messages

The following messages are used for the Preset Download feature:

<Actual Preset List Version Number>, <End Preset Transfer>, <Give Preset List Version Number>, <Set Analogue Preset>, <Set Preset Name>, <Start Preset Transfer>, <Stop Preset Transfer>

CEC 13.3.2 Feature Description

This feature is used to ensure that any tuner device will have the same set of presets as the TV. It is used to auto configure device presets, thereby removing any manual set up process. This feature will provide a consistent channel line up to the user regardless of which device is in use.

All devices that store the presets do so with a version number of the preset list. The version number is a one-byte variable and is incremented modulo 256 by the TV whenever a change to the preset list occurs. If a tuner device (other than the TV) changes its presets locally it shall not change its version number, because the version number only refers to the preset list of the TV. It is the responsibility of the device to remember that its preset list differs from that of the TV.

IPR2024-001429
HP – EX1010, Page 134 of 193

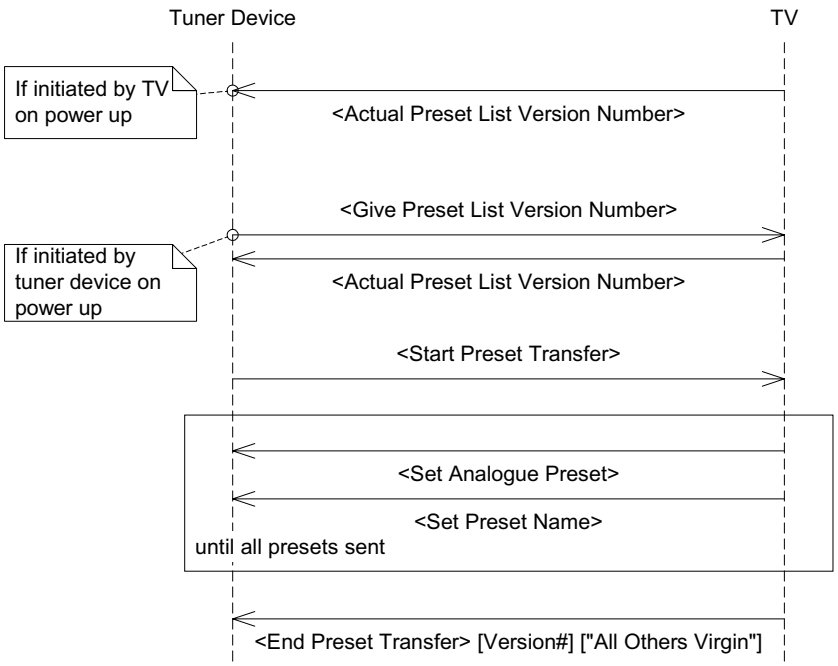

CEC Figure 11 The message exchange for the Preset Download feature

The feature can be initiated either by the TV or a tuner device on power up/connection. If the TV is the initiator it broadcasts the version number of the current list. If the device initiates the feature it requests the current version number from the TV.

If the device needs to download a new version of the list, it requests this from the TV. The preset information (e.g. channel and frequency) and optionally the preset name are sent to the device. This is repeated for all stored presets. The TV then informs the device when all set presets have been sent.

Note individual <Set Analogue Preset> and <Set Preset Name> messages can be used outside the above sequence to change small numbers of individual presets when a user has updated them in the TV. An <End Preset Transfer> message will always be sent once all presets have been transferred so that the device may update its version number.

In order to clear all the presets in another device (if for example all presets in the TV are cleared), the TV can send an <End Preset Transfer> [Version#] [“All others virgin”] message without first transmitting any <Set Analogue Preset> messages.

The preset download feature should be possible when the TV is in standby. It is up to the local specification if the TV should power on in order to download its presets. If an attempt is made to put a device into standby during a preset download it should either delay the standby until the preset download has completed, or continue with the preset download while in standby.

A device should ignore any of the following messages: <Actual Preset List Version Number>, <Set Analogue Preset>, <Set Preset Name> and <End Preset Transfer>, if they do not come from logical address 0 (the TV).

IPR2024-001429
HP – EX1010, Page 135 of 193

CEC 13.3.3 Exceptions

A device that initiates a <Start Preset Transfer> message can request that the transfer be stopped, by sending the message <Stop Preset Transfer>. The TV will then send an <End Preset Transfer> [Version#] [“Transfer interrupted”] message to indicate that transferring has been terminated. Any device that receives the [“Transfer interrupted”] parameter should remember that its preset table may be incomplete or out of date and should attempt a further download at a later time. The TV will ignore any <Stop Preset Transfer> messages from a device that did not initiate the transfer.

In the case of a partly transferred list, e.g. after a reshuffle of two presets, the device should check if the version number received in the <End Preset Transfer> message differs to its own value by more than 1. If it does then the device has missed an update and should initiate a full preset download. A partially transferred list will always have the [Preset List Info] parameter set to the value “Complete” (see [Preset List Info] in CEC Table 8).

A tuner device must be able to recover in the event that a preset download does not complete (no <End Preset Transfer> message is received). This can be detected by waiting for a sensible timeout after the last <Set Analogue Preset> or <Set Preset Name> message and if no subsequent message related to preset download is received the device should exit the Preset Download Active state.

IPR2024-001429
HP – EX1010, Page 136 of 193

CEC 13.3.4 State Diagrams

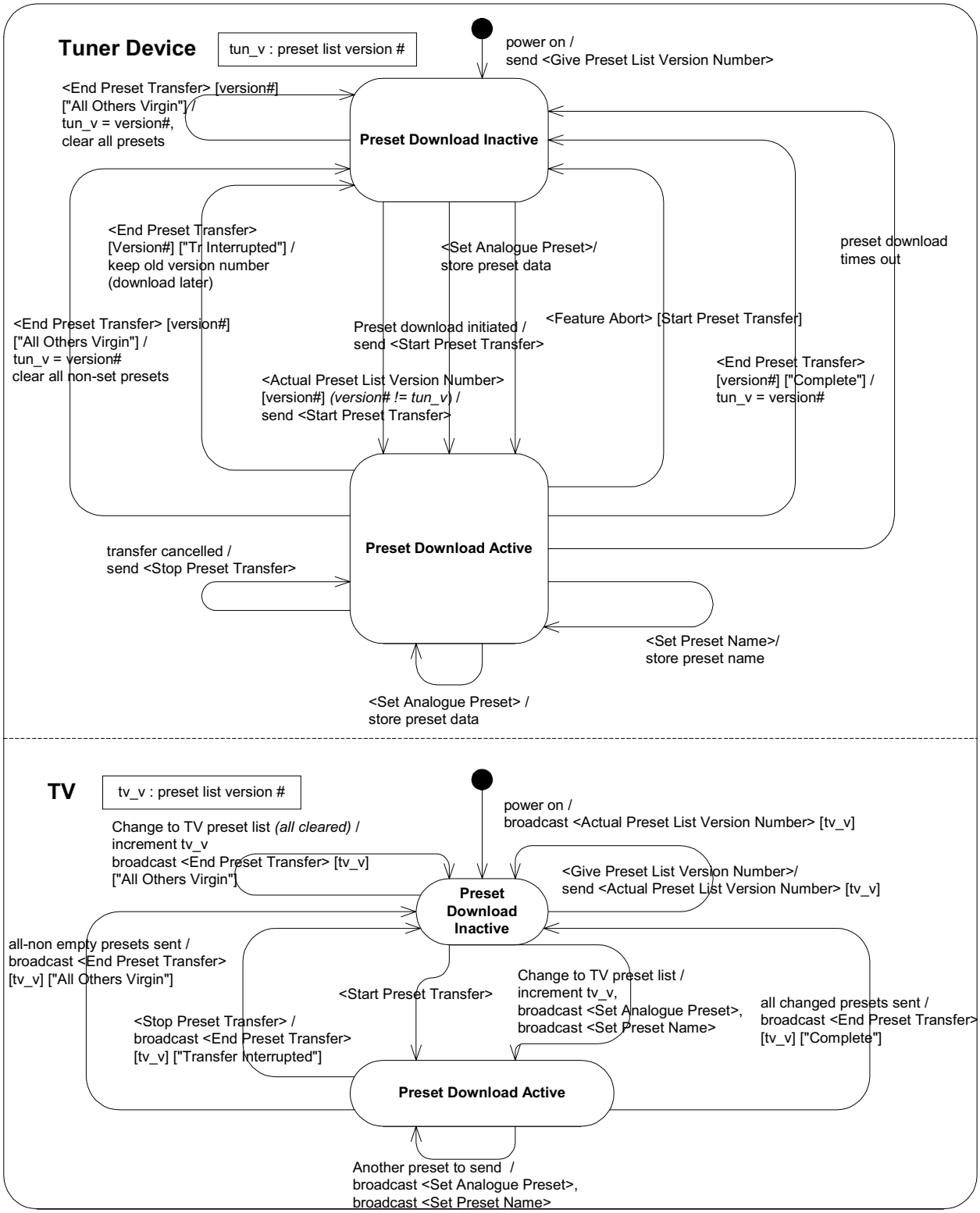

CEC Figure 12 State transitions for the Preset Download feature

IPR2024-001429
HP – EX1010, Page 137 of 193

CEC 13.4 One Touch Record

CEC 13.4.1 Messages

The following messages are used for the One Touch Record feature:

<Record Off>, <Record On>, <Record Status>, <Record TV Screen>

CEC 13.4.2 Feature Description

This feature allows the user to easily start a recording of the source that is being displayed on the TV, just by selecting a recording device and giving the record command. It is not always possible to carry out a One Touch Record as it depends on what source is currently being displayed. It is primarily used for the instant recording of a tuner preset, or the recording of another device (e.g. Camcorder) connected externally to the recording device

Either the TV or the recording device may initiate the One Touch Record Feature, for example by selecting a menu option on the TV or by pressing record on the recording device.

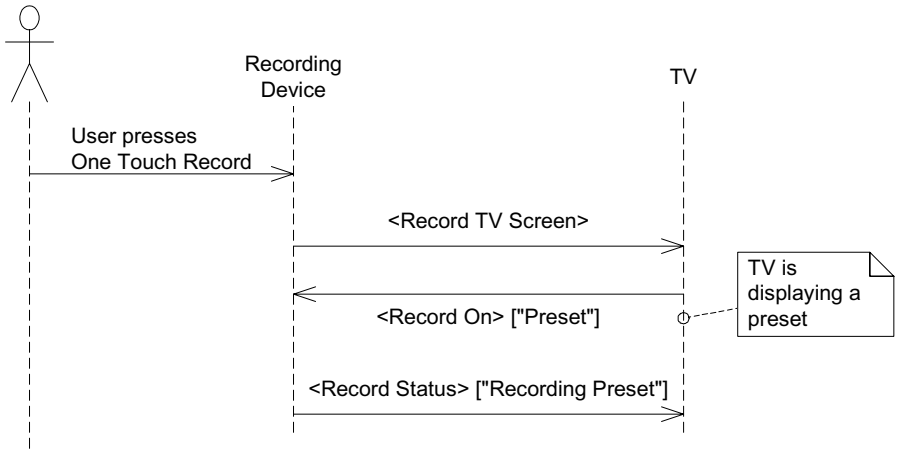

CEC Figure 13 A typical scenario for the One Touch Record feature

In the event of the recording device initiating the feature it will send a <Record TV Screen> message to the TV. On receipt of the <Record TV Screen> message by the TV, or if the user initiates the One Touch Record feature via the TV, the TV shall react as follows:

- It the TV is currently displaying an internal tuner preset, it shall respond with a <Record On> [“Preset”] [Preset Number] [Analogue Preset] message.
- If the Recording Device is the current active source device, then the TV shall respond with a <Record On> [“Own source”] message.
- If the TV is currently displaying some other source, it shall respond with a <Feature Abort> [“Cannot provide source”] message, or do nothing if initiated via the TV.

On receipt of a <Record On> message the recording device shall act as follows:

- If [“Preset”] is indicated and the devices local preset number matches the analogue preset information that was sent, the device shall change to that preset number and start recording. If the preset information does not match the preset number, the device should attempt to tune to the specified frequency and begin recording. If the device cannot support the required

IPR2024-001429
HP – EX1010, Page 138 of 193

frequency/broadcast system, then it should respond with a <Record Status> ["No recording – invalid preset"].

- If ["Own source"] is indicated, then it shall attempt to record whatever it is currently displaying, e.g. an external connection such as a camcorder or the preset it is currently tuned to.

The recording device shall respond with the message <Record Status> to indicate if recording has begun, or a reason why recording has failed. If the TV initiated the recording, it may stop it at any time by sending a <Record Off> message. The recording device should then stop recording immediately.

The TV should ignore a <Record TV Screen> message that comes from a non-recording device address, however it may accept the message from a Reserved address (a future device type).

CEC 13.5 Timer Programming

CEC 13.5.1 Messages

The following messages are used for the Timer Programming feature:

<Clear Timer>, <End Timer Record Block Transfer>, <Give Timer Options>, <Set Timer>, <Set Timer Program Title>, <Start Timer Record Block Transfer>, <Timer Cleared Status>, <Timer Options>, <Timer Record Block Transfer>, <Timer Record List Trigger>, <Timer Status>

CEC 13.5.2 Feature Description

This feature allows a device (e.g. the TV) to set a timer recording on a recording device. It may for example be used to set timer blocks of a recording device via a TV menu or via an EPG.

A device (e.g. the TV) may download the current list of timer blocks from the recording device as shown below.

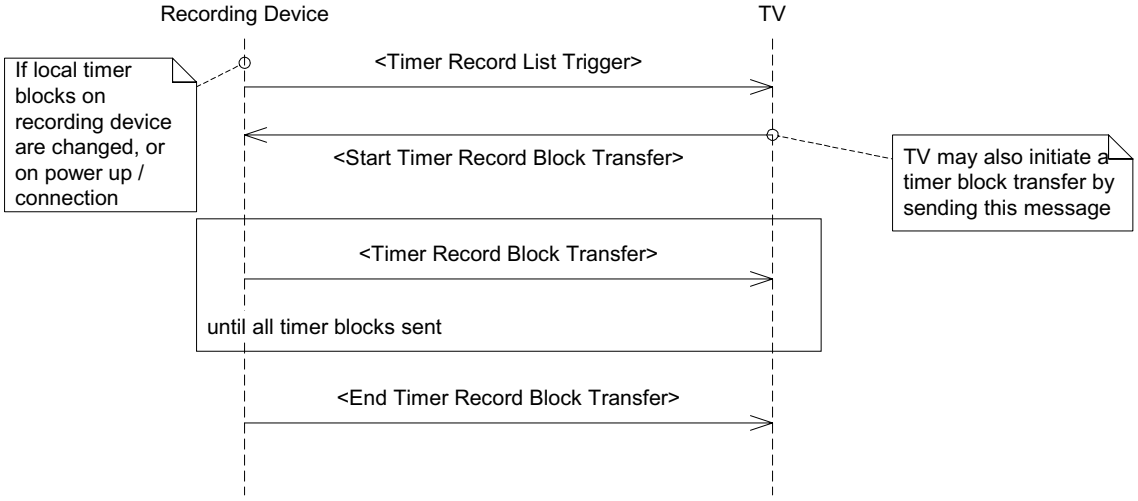

CEC Figure 14 Message exchange for the Timer Record Block Transfer process

A recording device can inform other devices when its timer record list has changed (e.g. when a new timer record block is added locally) by sending a <Timer Record List Trigger> message.

IPR2024-001429
HP – EX1010, Page 139 of 193

Recording devices should also send a <Timer Record List Trigger> message when powered on/connected to the system.

A device may query the recording device for information about its timer options by sending a <Give Timer Options> message. The recording device will respond with a <Timer Options> message, which describes information such as the number of free timer blocks and if high/low quality recording is supported.

A device may set or clear an individual timer block of a recording device. The recording device will respond to indicate if the timer was successfully set/cleared. It is also possible to transfer the program title of a timer block (where for instance a timer is set via an EPG). To achieve this a device may send a <Set Timer Program Title> message directly after sending <Set Timer>. The recording device may then store the program title along with the timer information. If the recording device does not support program titles, then it shall ignore an incoming <Set Timer Program Title> message.

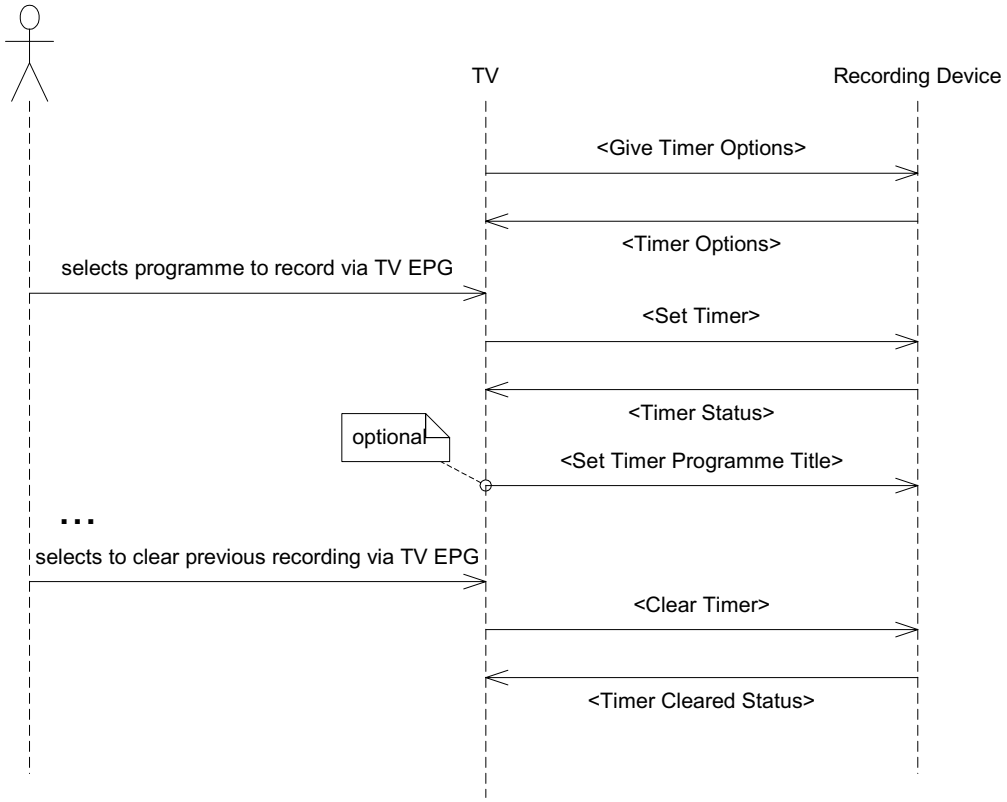

CEC Figure 15 A typical scenario for setting a Timer Record Block

CEC 13.6 System Information

CEC 13.6.1 Messages

The following messages are used for the System Information feature:

<Give Physical Address>, <Give System Info>, <Polling Message>, <Report Physical Address>, <Set Country>, <Set Language>, <Set System Info Version Number>

IPR2024-001429
HP – EX1010, Page 140 of 193

CEC 13.6.2 Feature Description

This feature allows devices to automatically use the same country and language settings as the TV.

When a source device is powered on, it should send a <Give System Info> message to the TV. The TV will then respond as shown below if the version number is different to the current version number stored by the TV.

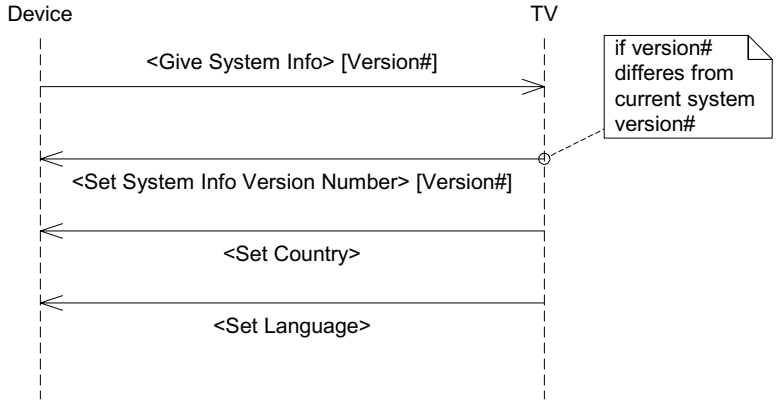

CEC Figure 16 Message exchange when downloading the TV's System Info

A device that supports the System Information feature shall support at least one of the <Set Country> and <Set Language> messages but is not required to support both. For example a device could have a configurable language setting, but no country setting.

When a change to a configuration setting occurs, the TV should increment its version number and broadcast a <Set System Info Version Number> message, followed by a message corresponding to the parameter that has changed as shown below.

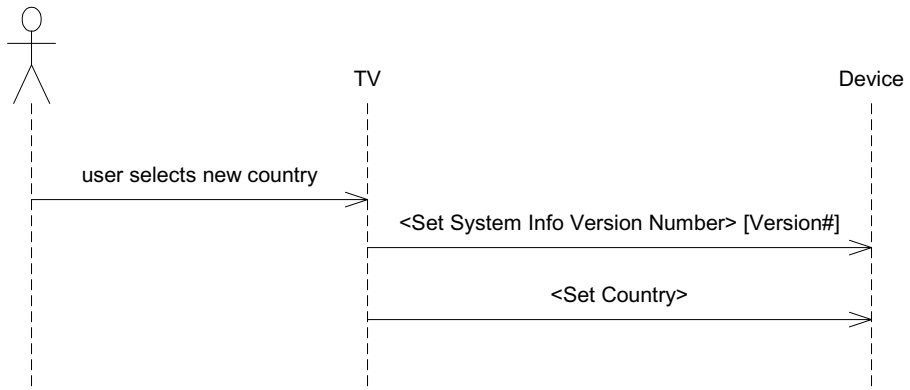

CEC Figure 17 A typical scenario when a system setting within the TV is modified

A device receiving a <Set System Info Version Number> shall update its internal system info version number. A device may accept and act upon individual <Set Country> and <Set Language> messages, however the TV should always send a <Set System Info Version Number> message before sending either message. A device shall ignore any of the above messages that come from an initiator address other than 0 (the TV).

IPR2024-001429
HP – EX1010, Page 141 of 193

CEC 13.6.3 Additional Information

The <Polling Message> is used to detect the presence or absence of a device within the system. It is used for allocating logical addresses as detailed in C.9.2.1.

The <Report Physical Address> message is used by a device to broadcast its physical address to all other devices in the system. By using the logical and physical addresses, any other device is able to derive the physical connectivity of the network. A device may request the physical address of another device by sending a directly addressed <Give Physical Address> message to it.

CEC 13.7 Deck Control

CEC 13.7.1 Messages

The following messages are used for the Deck Control feature:

<Deck Status>, <Give Deck Status>, <Deck Control>, <Play>

CEC 13.7.2 Feature Description

This feature allows a playback device (a deck) to be controlled by another device (e.g. the TV). Messages are also provided to allow a device to find out the status of the Deck; this allows, for example, a TV to keep its users interface synchronized with the status of the Deck.

A device may query the status of a deck with the <Give Deck Status> command. The deck should respond with a <Deck Status> message.

A device may control a Deck with the <Play> and <Deck Control> messages. These messages may be initiated after a user command. The Deck shall act upon the command that it receives within the messages <Play> and <Deck Control>. It is the equivalent of the user selecting the command local to the Deck. If the deck cannot carry out the command (e.g. it has no media when trying to play) it should respond with a <Feature Abort> ["Not in correct mode to respond"] message.

If the deck is in standby and receives a <Deck Control> ["Eject"] or <Play> ["Play Forward"] message, it should power on and act on the message. It is up to the local specification if the device should power on when receiving any other <Deck Control> or <Play> messages.

IPR2024-001429
HP – EX1010, Page 142 of 193

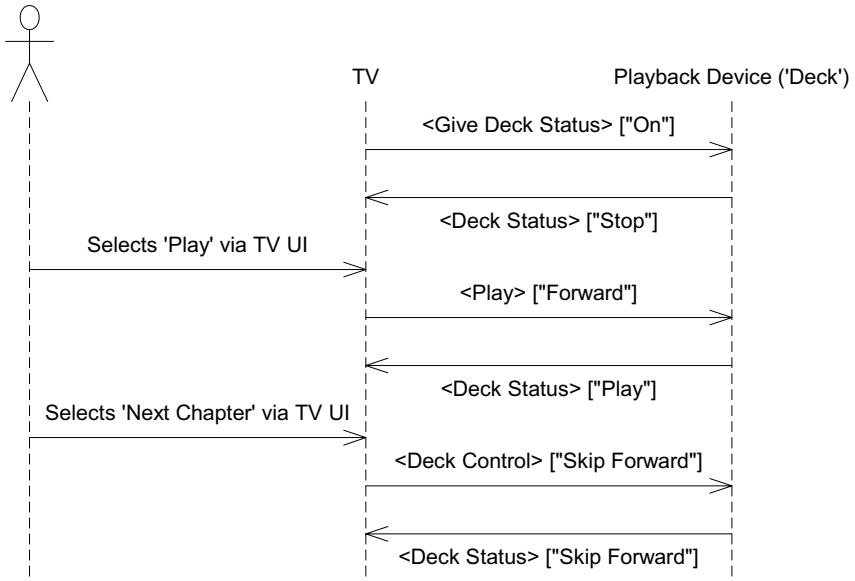

CEC Figure 18 A typical scenario for the Deck Control feature

CEC 13.8 Tuner Control

CEC 13.8.1 Messages

The following message are used for the Tuner Control feature:

<Give Tuner Device Status>, <Select Preset>, <Tuner Step Decrement>, <Tuner Step Increment>, <Tuner Device Status>

CEC 13.8.2 Feature Description

This feature allows a device (e.g. the TV) to control another CEC devices tuner.

A device can select a preset number of a tuner device by sending the <Select Preset> message. The tuner device shall then attempt to tune to that preset number and stream its output on the HDMI connection. If the specified preset number is not set on the device then it should send a <Feature Abort> ["Invalid operand"] message. If the tuner device cannot change its preset number (e.g. if it is recording), it should respond with a <Feature Abort> ["Refused"] message.

A device can also control a CEC Devices tuner using the <Tuner Step Increment> and <Tuner Step Decrement> messages. If a device receives the <Tuner Step Increment> or <Tuner Step Decrement> message then it should increment or decrement the current preset that it is tuned to. The tuner device can interpret the messages as it chooses, for example, it may only cycle through channels included in the users list of favorites.

A device may query the status of a tuner device by sending a <Give Tuner Device Status> message. The tuner device shall respond by sending a <Tuner Device Status> message indicating if it is currently displaying its tuner and the preset number it is currently tuned to.

IPR2024-001429
HP – EX1010, Page 143 of 193

CEC 13.9 Vendor Specific Commands

CEC 13.9.1 Messages

The following messages are used for the Vendor Specific Commands feature:

<Device Vendor ID>, <Give Device Vendor ID>, <Vendor Command>, <Vendor Remote Button Down>, <Vendor Remote Button Up>

CEC 13.9.2 Feature Description

This feature allows a set of vendor specific commands to be used to communicate between devices of a single vendor.

A device that supports vendor specific commands shall store a Vendor ID. A device shall broadcast a <Device Vendor ID> message after a successful initialization and address allocation to inform all other devices of its vendor ID. A device may request the Vendor ID of another device by sending a <Give Device Vendor ID> message to it. The follower shall respond by broadcasting a <Device Vendor ID> message. In this way any device can determine the vendor of another device. A device shall only attempt to transmit a vendor specific command to another device with the same vendor ID. If a device receives a vendor specific command from another device whose vendor ID it does not know, it shall assume that it is of the same vendor and respond accordingly.

It is possible to send vendor specific remote control commands using the <Vendor Remote Button Down> and <Vendor Remote Button Up> messages.

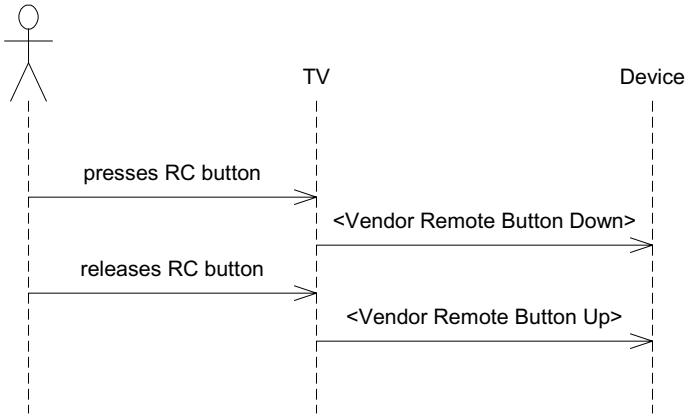

CEC Figure 19 The messages sent in the Vendor Specific Commands feature

In addition it is possible to send other (non remote control key) vendor specific messages using the <Vendor Command> message. The message parameter(s) can be used to communicate any additional (vendor defined) messages and data.

CEC 13.10 OSD Status Display

CEC 13.10.1 Messages

The following message is used for the OSD Status Display feature:

IPR2024-001429
HP – EX1010, Page 144 of 193

<Set OSD String>

CEC 13.10.2 Feature Description

This feature allows a device to transfer a text string to the TV for On Screen Display. The <Set OSD String> message is used to transfer the text string to the TV.

A text string may be displayed for a default period (i.e. 5 seconds) or until explicitly cleared. In the latter case the device should send another <Set OSD String> message to clear the text when it is appropriate.

The TV should display the whole string unless it is in an unsuitable state, in which case it should generate a <Feature Abort> message.

If a new <Set OSD String> message is received when an OSD String is already being displayed, it should overwrite the existing string. OSD Strings generated locally within the TV may also overwrite any messages sent via the <Set OSD String> message.

CEC 13.11 Device Menu Control

CEC 13.11.1 Messages

The following messages are used for the Device Menu Control feature:

<User Control Pressed>, <User Control Released>, <Menu Request>, <Menu Status>

CEC 13.11.2 Feature Description

This feature allows device menus to be controlled via the TV remote control as if it was using its own remote control and allow the TV to be aware when another device has a menu on its display.

A device shall indicate that it is displaying a menu by sending a <Menu Status> ["Activated"] message to the TV. If the device leaves the menu it shall send a <Menu Status> ["Deactivated"] message to the TV. The TV should then handle incoming remote control commands internally (as it would normally).

The message <User Control Pressed> can be used to send incoming Remote Control commands from the TV to a device that it is displaying a menu. The <User Control Released> message should be sent on release of the RC button. If a device fails to acknowledge any <User Control> message when in the providing menu state then the TV shall assume that it has been removed from the system and act accordingly. For more information on <User Control> see the Remote Control Pass Through feature description (CEC 13.4).

The TV may initiate a device's menu by sending a <Menu Request> ["Activate"] command. It may subsequently remove the menu by sending a <Menu Request> ["Deactivate"] message. The TV may also query a devices menu status by sending a <Menu Request> ["Query"]. The menu device shall always respond with a <Menu Status> command when it receives a <Menu Request>.

A new active source device shall send a <Menu Status> ["Activated"] message to the TV if it is displaying a menu. The TV shall assume that a new active source is not in a menu unless it receives this message after the <Active Source> message. The TV shall ignore a <Menu Status>

IPR2024-001429
HP – EX1010, Page 145 of 193

message coming from a device that is not the current active source. A source device shall only send <Menu Status> commands when it is the current active source.

CEC 13.12 Routing Control

CEC 13.12.1 Messages

The following messages are used for the Routing Control feature:

<Active Source>, <Request Active Source>, <Set Stream Path>, <Routing Change>, <Routing Information>

CEC 13.12.2 Feature Description

This feature is used to control the routing of the HDMI network, by controlling CEC Switches.

In general whenever a device starts being streamed to the TV it should send an <Active Source> message. Any CEC Switches between the device and the TV should react to the <Active Source> message and switch (if required) to ensure the device at the physical address specified is on the active path. If another device was previously the active source then it should act accordingly, for example it may pause if it is playing media.

A device may broadcast a <Request Active Source> message to discover if any device is currently acting as the active source. The active source device will respond by broadcasting an <Active Source> message.

It is possible that the user may select a device to view via the TV user interface. In this case the TV should broadcast a <Set Stream Path> message with the physical address of the device it wishes to display as a parameter. Any CEC Switches between the device and TV should switch (if required) to ensure the device is on the active AV path. This feature ensures that non-CEC-compliant devices in the network can be switched to, if for instance they have been manually set up in the TV menu. A CEC device at the location specified by the <Set Stream Path> message should begin streaming its output and broadcast an <Active Source> message.

In the case that the user manually switches a CEC Switch it should broadcast a <Routing Change> message. This will inform all devices in the network that the current active route below the switch has changed. This enables, for instance, a device that has been deselected by a switch to pause if it is playing media.

If a CEC Switch is at the new position indicated by the <Routing Change> message then it should broadcast a <Routing Information> message with the physical address of its current active path. If a CEC Switch receives a <Routing Information> message then it should broadcast a <Routing Information> message to indicate it’s current active path. In this way the TV is aware of which device is on the current active path after the switch occurs. If the TV detects that the active source device has been de-selected by changing the switch it may either switch to an internal preset or send a <Set Stream Path> message to the device at the new location to indicate that it should become the new active source.

The following diagram shows an example of the message flow when a user manually switches a CEC Switch. (CEC Switches are shown filled).

IPR2024-001429
HP – EX1010, Page 146 of 193

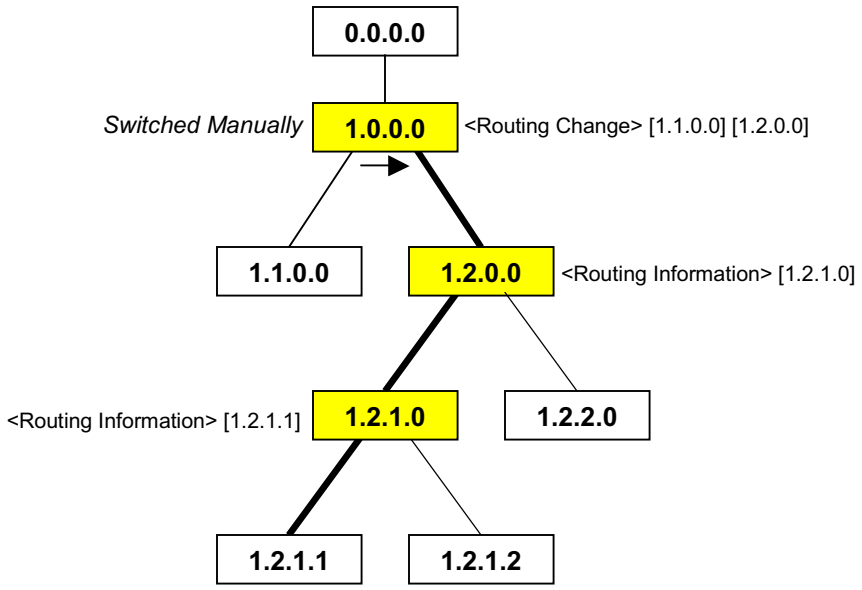

CEC Figure 20 Example message flow, when a CEC Switch is manually switched

CEC 13.13 Remote Control Pass Through

CEC 13.13.1 Messages

The following messages are used for the Remote Control Pass Through feature:

<User Control Pressed>, <User Control Released>

CEC 13.13.2 Feature Description

This feature is used to pass remote control commands received by one device (e.g. the TV) through to another device in the network.

The initiator shall decide on which device the remote command is for and send a directly addressed <User Control Pressed> message to it using the table of standard remote control pass though commands given in CEC Table 9.

The initiator will send a <User Control Pressed> message when the remote control button is pressed. When the button is released a <User Control Released> message should be sent by the initiator.

The initiator should not send repeated <User Control Pressed> messages for the same button press.

The initiator may send further <User Control Pressed> messages without interleaving <User Control Released> messages if a new button press occurs quickly after a button release.

A device that has initiated a <User Control Pressed> message shall ensure that it sends a <User Control Released> message before going into standby. In the event that the initiator of the

IPR2024-001429
HP – EX1010, Page 147 of 193

message is powered off/disconnected before sending a <User Control Released> message, the follower will never receive the <User Control Released> message.

This method should not be used for sending commands other than true remote control pass through to another device as the actions taken by the other device are not defined in a consistent way.

CEC 13.14 Device OSD Name Transfer

CEC 13.14.1 Messages

The following messages are used for the Device OSD Name Transfer feature:

<Give OSD Name>, <Set OSD Name>

CEC 13.14.2 Feature Description

This feature is used to request the preferred name of a device to be used in any on screen display (e.g. menus), which reference that device. A device (e.g. the TV) may request another devices name by sending a directly addressed <Give OSD Name> message to it. If the device supports this feature it will respond with a <Set OSD Name> message. The devices name should then be stored and used in any future on screen references to it.

A TV shall send a <Give OSD Name> message whenever it discovers a new device that has been connected.

IPR2024-001429
HP – EX1010, Page 148 of 193

CEC 14 Device states

This section shows how CEC messages can change the states of a device.

CEC 14.1.1 Device States

The following is a list of states that each device type can be in. Each device should be in one and only one state for each line shown below.

All Devices:	On, Standby, Off
TV:	Image Display, Menu Display, Text Display
	Preset Download Active, Preset Download Inactive
	Device Menu Active, Device Menu Inactive
Recording Device:	Recording, Not Recording
Playback Device:	Deck Active, Deck Inactive
Menu Providing Device:	Device Menu Active, Device Menu Inactive
Tuner Device:	Preset Download Active, Preset Download Inactive
Timer Setting Device:	Timer Block Transfer Active, Timer Block Transfer Inactive

CEC 14.1.2 State Changes

The following diagrams show the state transitions that are caused as a direct result of a device receiving a CEC message. Transitions between states that are not caused as a result of CEC messages are generally not shown, except where no CEC message can cause that transition.

CEC 14.1.3 All Devices

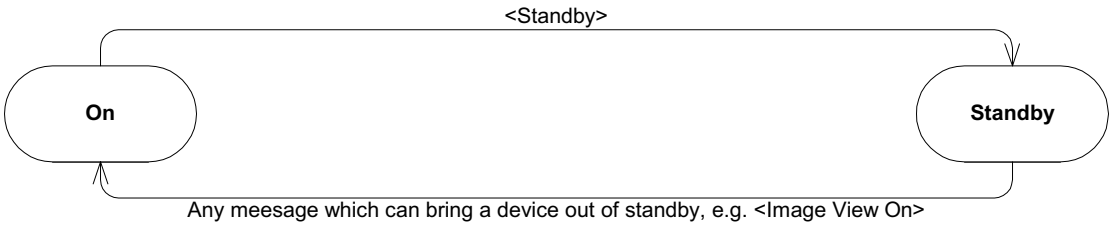

IPR2024-001429
HP – EX1010, Page 149 of 193

CEC 14.1.4 TV

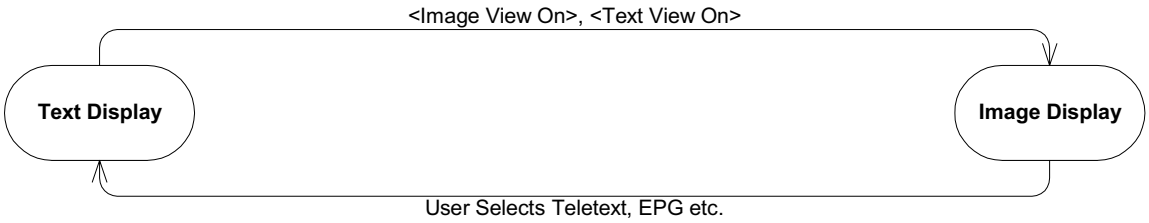

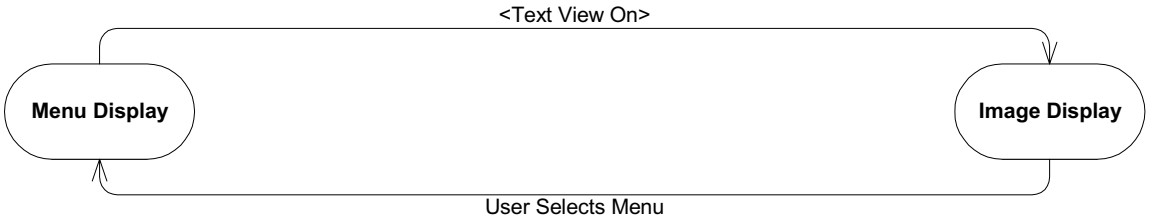

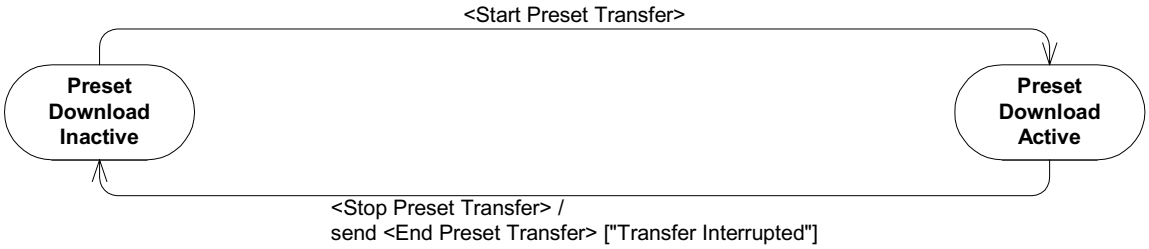

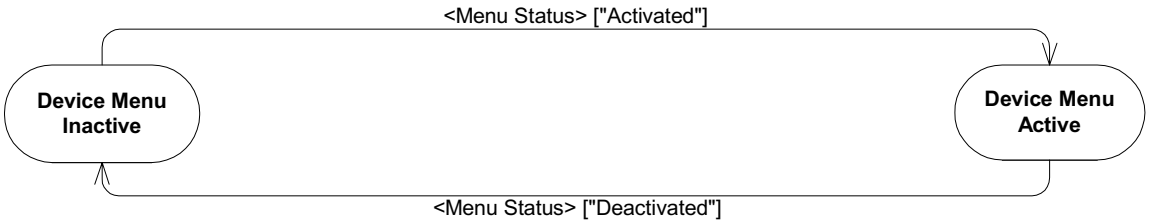

IPR2024-001429
HP – EX1010, Page 150 of 193

CEC 14.1.5 Recording Device

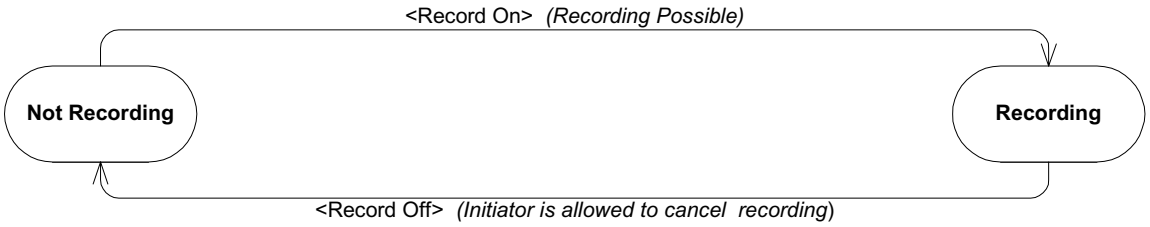

CEC 14.1.6 Playback Device

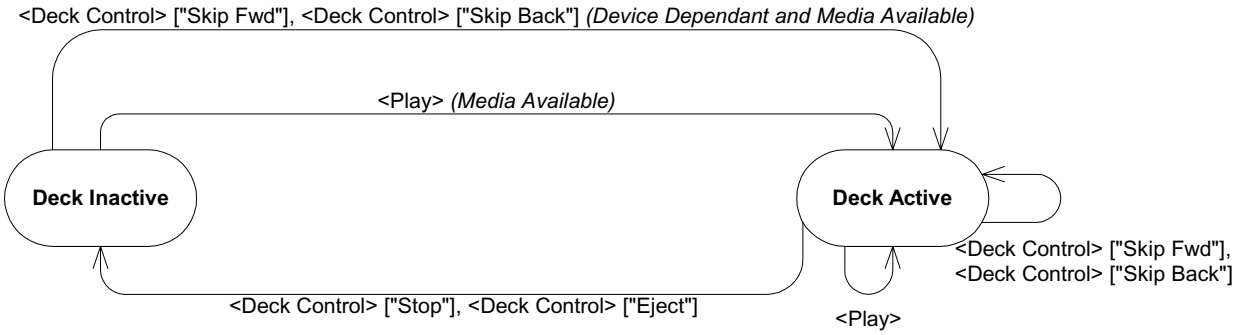

CEC 14.1.7 Menu Providing Device

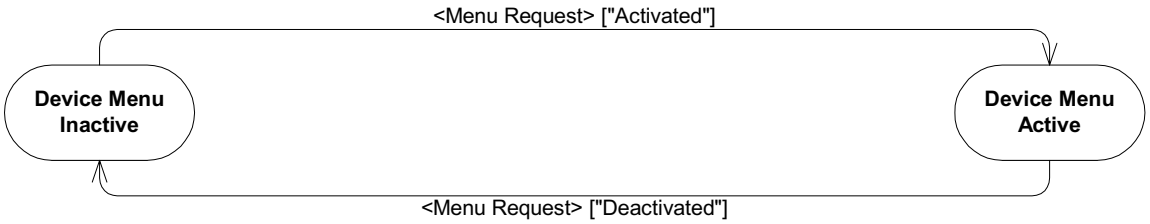

CEC 14.1.8 Tuner Device

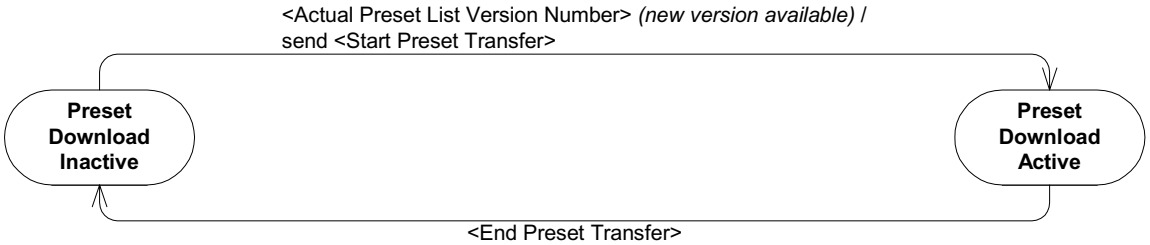

IPR2024-001429
HP – EX1010, Page 151 of 193

CEC 14.1.9 Timer Setting Device

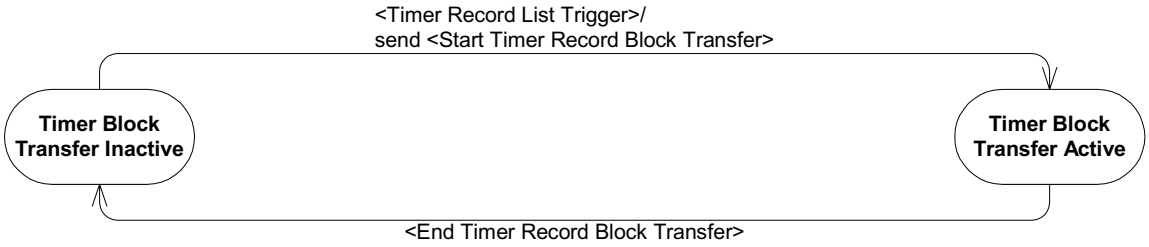

IPR2024-001429
HP – EX1010, Page 152 of 193

CEC 15 Message Descriptions

The section defines the individual messages used in CEC. It describes them and defines their parameters and expected responses. As CEC has no session layer, this section and the operands section (CEC 17) effectively define the complete messaging system. The use of this messaging system is clarified in the features description (CEC 13).

The following list describes each heading within the message table (CEC Table 5).

- **Opcode** – The name used to identify the message.
- **Value** – The unique identifier for the message.
- **Description** – A brief description of the message.
- **Parameters** – The set of parameters used by the message, refer to CEC Table 8 for individual descriptions.
- **Parameter Description** – A brief description of the parameters that the message uses.
- **Response** – Describes how a device should respond on receipt of the message.
- **Directly Addressed** – Indicates if the message may be directly addressed.
- **Broadcast** – Indicates if the message may be broadcast.
- **Mandatory** – Indicates if it is mandatory for a device to react and respond on receipt of the message. Note that where a message is indicated as being mandatory for 'All' devices, this excludes devices which act only as a CEC Switch.

Within the table some cells are intentionally left blank; this indicates that there is no associated requirements for the Opcode described.

IPR2024-001429
HP – EX1010, Page 153 of 193

CEC Table 5 Message Descriptions

Opcode	value	Description	Parameters	Parameter description	Response	Directly addressed	Broadcast	Mandatory
<Active Source>	0x82	Used by a new source to indicate that it has started to transmit a stream OR used in response to a <Request Active Source>	[Physical Address]	The physical address of the device.	A current active source should take appropriate action. Any CEC switches between source and root should switch to the appropriate input.			TV, CEC Switches
<Actual Preset List Version Number>	0x16	Used by the TV to inform all devices of the preset list version number. This is usually sent when the preset list has changed, or the TV has recently joined the network.	[Preset List Version Number]	The version number is incremented modulo 256 after every change to the preset table.	If the devices version number differs with that received it enters 'Preset Download Active' state and initiates a Preset Download by sending a <Start Preset Transfer> message to the TV.			
<Clear Timer>	0x33	Used to clear a timer block of a device.	See <Set Timer> message.	See <Set Timer> message.	Clear timer block if possible, then respond with <Timer Cleared Status>			
<Deck Control>	0x42	Used to control a device's tape/media functions.	[Deck Control Mode]	The deck control requested.	Perform the specified actions, or return a <Feature Abort> message. It is device dependant whether or not a Skip Fwd/Skip Back (Wind/Rewind) command is legal when in the 'Deck Inactive' state. If the device is in standby and receives an eject command, it should power on and eject its media.			Playback device

IPR2024-001429
HP – EX1010, Page 154 of 193

Opcode	value	Description	Parameters	Parameter description	Response	Directly addressed	Broadcast	Mandatory
<Deck Status>	0x1B	Used to provide a deck's status to the initiator of the <Give Deck Status> message.	[Deck Info]	Information on the device's current status.				
<Device Vendor ID>	0x87	Reports the vendor ID of this device.	[Vendor ID]	The vendor ID of the device.	Any other interested device may store the vendor ID of the device.			
<End Preset Transfer>	0x03	Informs all devices that a preset transfer session has concluded.	[Preset List Version Number] [Preset List Info]	The version number of the preset list that has just been sent and its status.	Enter 'Preset Download Inactive' state. Store the new version number locally unless the parameter indicates the transfer was interrupted.			
<End Timer Record Block Transfer>	0x39	Used to indicate the end of the Timer Record Block transfer.	[Timer List Info]	Transfer and timer information.	Enter 'Timer Block Transfer Inactive' state.			
<Feature Abort>	0x00	Used as a response to indicate that the device does not support the requested message type, or that it cannot execute it at the present time.	[Feature Opcode] [Abort Reason]	The Opcode of the aborted message. The reason provides an indication as to whether the follower does not support the message, or does support the message but cannot respond at the present time.	Assume that request is not supported or has not been actioned.			All[1]

[1] Mandatory to accept this message on all devices and to generate it if a requested message is not supported.

IPR2024-001429
HP – EX1010, Page 155 of 193

Opcode	value	Description	Parameters	Parameter description	Response	Directly addressed	Broadcast	Mandatory
<Give Deck Status>	0x1A	Used to request the status of a device, regardless of whether or not it is the current active source.	[Status Request]	Allows the initiator to request the status once or on all future state changes. Or to cancel a previous <Give Deck Status> [“On”] request.	<Deck Status>			Playback Device
<Give Device Vendor ID>	0x8C	Requests the Vendor ID from a device.	None		<Device Vendor ID>			
<Give OSD Name>	0x46	Used to request the preferred OSD name of a device for use in menus associated with that device.	None		<Set OSD Name>			
<Give Physical Address>	0x83	A request to a device to return its physical address.	None		<Report Physical Address>			All
<Give Preset List Version Number>	0x15	Used by a tuner device to request the TV’s preset list version number.	None.		<Actual Preset List Version Number>			TV[2]

[2] Only mandatory if TV contains tuner

IPR2024-001429
HP – EX1010, Page 156 of 193

Opcode	value	Description	Parameters	Parameter description	Response	Directly addressed	Broadcast	Mandatory
<Give System Info>	0x52	Requests system information from the TV.	[System Info Version Number]	Version number of the system info.	TV sends: <Set System Info Version Number> and at least one of: <Set Country> and <Set Language> to the initiator. TV only responds if <System Info Version Number> is different to that given as a parameter within the request.			TV[3]
<Give Timer Options>	0x3E	Request for timer programming capabilities of a recording device.	None		<Timer Options>			
<Give Tuner Device Status>	0x08	Used to request the status of a tuner device.	[Status Request]	Allows the initiator to request the status once or on all future state changes, or to cancel a previous <Give Tuner Device Status> ["On"] message.	Respond with a <Tuner Device Status> message, or stop reporting changes on receipt of the ["Off"] message.			Tuner Device
<Image View On>	0x04	Sent by a source device to the TV whenever it enters the active state (alternatively it may send <Text View On>).	None		Turn on (if not on). If in 'Text Display' state then the TV enters 'Image Display' state. Displays output from initiator. Note: Don't change TV menu or PIP status.			TV

[3] Only mandatory for information which the TV already holds for other purposes.

IPR2024-001429
HP – EX1010, Page 157 of 193

Opcode	value	Description	Parameters	Parameter description	Response	Directly addressed	Broadcast	Mandatory
<Menu Request>	0x8D	A request from the TV for a device to show/remove a menu or to query if a device is currently showing a menu.	[Menu Request Type]	Indicates if the menu request is to activate or deactivate the devices menu, or to simply query the devices menu status.	May enter or exit the 'Device Menu Active' state if the parameter was "Activate" or "Deactivate" Send <Menu Status> to indicate the current status of the devices menu.			Menu Providing Device
<Menu Status>	0x8E	Used to indicate to the TV that the device is showing/has removed a menu and requests the remote control keys to be passed though.	[Menu State]	Indicates if the device is in the 'Device Menu Active' state or 'Device Menu Inactive' state.	If Menu State indicates activated, TV enters 'Device Menu Active' state and forwards those Remote control commands, shown in CEC Table 9, to the initiator. If deactivated, TV enters 'Device Menu Inactive' state and stops forwarding remote control commands.			TV
<Play>	0x41	Used to control the playback behaviour of a source device.	[Play Mode]	Play mode required.	Perform the specified actions, or return a <Feature Abort> message. If media is available the device enters 'Deck Active' state. If the device is in standby, has media available and the parameter is ["Play Forward"] it should power on.			Playback device
<Polling Message>	-	Used by any device for device discovery – similar to ping in other protocols.	None		Will set a low level ACK.			All

IPR2024-001429
HP – EX1010, Page 158 of 193

Opcode	value	Description	Parameters	Parameter description	Response	Directly addressed	Broadcast	Mandatory
<Record Off>	0x0B	Requests a device to stop a recording.	None		Exit 'Recording' state and stop recording if the initiator is the same as the initiator of the <Record On> message which started this recording.			Recordin g Device
<Record On>	0x09	Attempt to record the specified source.	[Record Source]	Source to record, either preset number or own source.	Enter 'Recording' state and start recording if possible. Send the initiator <Record Status>.			Recordin g Device
<Record Status>	0x0A	Used by a recording device to inform the initiator of the message <Record On> about its status.	[Record Status Info]	The recording status of the device.				
<Record TV Screen>	0x0F	Request by the recording device to record the presently displayed source.	None		Initiate a recording using the <Record On> message, or send a <Feature Abort> ["Cannot provide source"] if the presently displayed source is not recordable.			
<Report Physical Address>	0x84	Used to inform all other devices of the mapping between physical and logical address of the initiator.	[Physical Address] [Device Type]	The device's physical address within the cluster.				
<Request Active Source>	0x85	Used by a new device to discover the status of the system.	None		<Active Source> from the present active source.			

IPR2024-001429
HP – EX1010, Page 159 of 193

Opcode	value	Description	Parameters	Parameter description	Response	Directly addressed	Broadcast	Mandatory
<Routing Change>	0x80	Sent by a CEC Switch when it is manually switched to inform all other devices on the network that the active route to the sink below the switch has changed.	[Original Address] [New Address]	The previous child_address that the switch was switched to and the new child_address it has been moved to.	If a CEC Switch is at the new address, it sends a <Routing Information> message to indicate its current active route.			TV, CEC Switches
<Routing Information>	0x81	Sent by a CEC Switch to indicate the active route to the sink below the switch.	[Physical Address]	The current active route to the sink in the CEC Switch.	If a CEC Switch is at the specified address it should relay a <Routing Information> message to indicate its current active path.			CEC Switches
<Select Preset>	0x13	Used to allow one device to select a preset on another device that contains a tuner.	[Preset Number]	The preset number to be displayed.	Change to the selected preset, and stream its output on the HDMI connection. If the preset number is not set or the device cannot change preset, then it responds with a <Feature Abort>.			

IPR2024-001429
HP – EX1010, Page 160 of 193

Opcode	value	Description	Parameters	Parameter description	Response	Directly addressed	Broadcast	Mandatory
<Set Analogue Preset>	0x01	Used to transfer an analogue preset.	[Preset Number] [Analogue Preset]	Preset number and details	Store the preset using the details indicated. If the device does not support the preset number, then it should ignore the message. If the device does not support the frequency or broadcast system, then it should clear the preset number			Tuner Device [4]
<Set Country>	0x31	Used by a TV to indicate the country setting to other devices	[Country]	The country code.	Set the country as specified, if possible			
<Set Language>	0x32	Used by a TV to indicate the menu & subtitle language settings to other devices	[Menu Language] [Subtitle Language]	The user's menu & subtitle language choices.	Set the menu & subtitle languages as specified, if possible.			
<Set OSD Name>	0x47	Used to set the preferred OSD name of a device for use in menus associated with that device.	[OSD Name]	The preferred name of the device.	Store the name and use it in any menus associated with that device.			
<Set OSD String>	0x64	Used to send a text message to output on a TV.	[Display Control] [OSD String]	Display timing. Text to be displayed.	TV displays the message.			

[4] Only mandatory on a device which initiates a <Start Preset Transfer>

IPR2024-001429
HP – EX1010, Page 161 of 193

Opcode	value	Description	Parameters	Parameter description	Response	Directly addressed	Broadcast	Mandatory
<Set Preset Name>	0x0C	Used to transfer a preset name (only accepted if <Set Analogue Preset> has previously been received and accepted for this preset number). The preset name is optional, so this message may not be sent when transferring a preset.	[Preset Number] [Preset Name]	Preset number and name	Store the preset name indicated or ignore message.			
<Set Stream Path>	0x86	Used by the TV to request a streaming path from the specified physical address.	[Physical Address]	The physical address of the source device.	Any CEC switches between should switch inputs according to the path defined in [Physical Address]. The device at the new address should stream its output and broadcast an <Active Source> message.			CEC Switches
<Set System Info Version Number>	0x53	Used by a TV to indicate its system info version number.	[System Info Version Number]	The version of the system info.	Devices should update their system info version number accordingly.			
<Set Timer Program Title>	0x67	Used to set the name of a program associated with a timer block. Sent directly after sending a <Set Timer> message. The name is then associated with that timer block.	[Program Title String]	Program title	Recording device stores title for future reference. Ignore message if it is not the immediate next message from this initiator following a <Set Timer> message.			

IPR2024-001429
HP – EX1010, Page 162 of 193

Opcode	value	Description	Parameters	Parameter description	Response	Directly addressed	Broadcast	Mandatory
<Set Timer>	0x34	Used to set a single timer block on a recording device.	[Preset Number] [Day of Month] [Month of Year] [Start Time] [Stop Time] [PIL Code] [Series Code] [Timer Related Data]	A complete set of timer information for one recording.	<Timer Status> message.			
<Standby>	0x36	Switches one or all devices into standby mode. Can be used as a broadcast message or be addressed to a specific device. It is recommended that a directly addressed message is only sent if the initiator originally brought the device out of standby.	None		Switch the device into standby. [5] Ignore the message if already in standby.			All
<Start Preset Transfer>	0x02	Request the current preset list from TV tuner.	None		TV enters 'Preset Download Active' state and starts transferring presets from its tuner.			TV[6]

[5] Can be ignored if actively engaged in a recording or providing a source stream for a recording.
[6] Only mandatory if TV contains a tuner.

IPR2024-001429
HP – EX1010, Page 163 of 193

Opcode	value	Description	Parameters	Parameter description	Response	Directly addressed	Broadcast	Mandatory
<Start Timer Record Block Transfer>	0x37	Used to request transfer of all Timer Record Blocks from a recording device.	None		Enter 'Timer Block Transfer Active' state and broadcasts all occupied Timer Record Blocks using <Timer Record Block Transfer> messages.			
<Stop Preset Transfer>	0x10	Request from the initiator of <Start Preset Transfer> to stop transmitting presets. Ends a preset transfer session.	None		TV enters 'Preset Download Inactive' state and sends an <End Preset Transfer> ["Transfer interrupted"] message. No further presets are transmitted.			TV[6]
<Text View On>	0x0D	As <Image View On>, but also removes any text, menus and PIP windows from the TV's display.	None		As <Image View On>, but removes PIPs and menus from the screen. The TV enters 'Image Display' state regardless of its previous state.			TV
<Timer Cleared Status>	0x43	Used to give the status of a <Clear Timer> message.	[Timer Cleared Status Data]	Indicates if the timer was cleared successfully.	If the message indicates that the timer was not cleared because there was no matching entry, the device should remove the timer block locally or use <Start Timer Record Block Transfer> to ensure consistency with the recording device.			

IPR2024-001429
HP – EX1010, Page 164 of 193

Opcode	value	Description	Parameters	Parameter description	Response	Directly addressed	Broadcast	Mandatory
<Timer Options>	0x3F	Used by a recording device to inform the initiator of the message <Give Timer Options> about its timer programming capabilities.	[# Timer Blocks] [# Free Timer Blocks] [Timer Options]	The total number and free number of timer blocks, with additional information about what programming features are supported.				
<Timer Record Block Transfer>	0x38	Used to transfer the data of a Timer Record Block.	[Preset Number] [Day of Month] [Month of Year] [Start Time] [Stop Time] [PIL Code] [Series Code] [Timer Block Related Data] [Recording Status]	As for <Set Timer>, except [Timer Block Related Data], [Recording Status] A complete set of timer information for one recording.				
<Timer Record List Trigger>	0x19	Used by a device to inform all followers that 1) its timer block list has changed; 2) it has been powered up.	None		May enter 'Timer Block Transfer Active' state and request to start the transfer of blocks by sending a <Start Timer Record Block Transfer> message.			
<Timer Status>	0x35	Used to send timer status to the initiator of a <Set Timer> message.	[Timer Status Data]	Indicates the timer status	.			

IPR2024-001429
HP – EX1010, Page 165 of 193

Opcode	value	Description	Parameters	Parameter description	Response	Directly addressed	Broadcast	Mandatory
<Tuner Device Status>	0x07	Use by a tuner device to provide its status to the initiator of the <Give Tuner Device Status> message.	[Tuner Device Info]	Information on the tuner devices current status.				
<Tuner Step Decrement>	0x06	Used to decrement the preset used by a device's tuner. Can be used for PIP.	None		Follower decrements tuner preset.			
<Tuner Step Increment>	0x05	Used to increment the preset used by a device's tuner. Can be used for PIP.	None		Follower increments tuner preset.			
<User Control Pressed>	0x44	Used to indicate that the user pressed a remote control button or switched from one remote control button to another.	[UI Command]	UI command issued by user.	Update display or perform an action, as required.			
<User Control Released>	0x45	Indicates that user released a remote control button (the last one indicated by the <User Control Pressed> message)	None		Update display or perform an action, as required.			

IPR2024-001429
HP – EX1010, Page 166 of 193

Opcode	value	Description	Parameters	Parameter description	Response	Directly addressed	Broadcast	Mandatory
<Vendor Command>	0x89	Allows vendor specific commands to be sent between two devices.	[Vendor Specific Data]	Vendor specific command or data. The maximum length of the [Vendor Specific Data] must not exceed 14 data blocks to avoid saturating the bus.	Vendor Specific			
<Vendor Remote Button Down>	0x8A	Indicates that a remote control button has been depressed.	[Vendor Specific RC Code]	The vendor specific Remote Control Code for the key pressed.	Vendor Specific			
<Vendor Remote Button Up>	0x8B	Indicates that a remote control button (the last button pressed indicated by the Vendor Remote Button Down message) has been released.	None		Vendor Specific			

IPR2024-001429
HP – EX1010, Page 167 of 193

CEC 16 Message Dependencies

This section describes the dependencies between each message. This section is divided into two tables, which describe the following:

- CEC Table 6 describes the message dependencies when a device is capable of receiving a particular message (i.e. it does not <Feature Abort> indicating an [“Unrecognized opcode”] in response to the message).
- CEC Table 7 describes the message dependencies when a device is capable of sending a particular message.

Each table describes the additional messages that the device shall be capable of receiving and sending if a particular message is supported.

IPR2024-001429
HP – EX1010, Page 168 of 193

CEC Table 6 Message dependencies when receiving a message

If device does not <Feature Abort> the following message:	**It shall not <Feature Abort> the message(s):**	**It shall be able to send the message(s):**
<Actual Preset List Version Number>	<End Preset Transfer>, <Set Analogue Preset>	<Give Preset List Version Number>, <Start Preset Transfer>, <Stop Preset Transfer>
<Clear Timer>	<Set Timer>	<Timer Cleared Status>, <Timer Status>
<Deck Control>	<Play>, <Give Deck Status>	<Deck Status>
<Deck Status>	-	<Give Deck Status>, <Play>, <Deck Control>
<Device Vendor ID>	-	<Give Device Vendor ID>
<End Preset Transfer>	<Actual Preset List Version Number>, <Set Analogue Preset>	<Give Preset List Version Number>, <Start Preset Transfer>, <Stop Preset Transfer>
<End Timer Record Block Transfer>	<Timer Record Block Transfer>, <Timer Record List Trigger>	<Start Timer Record Block Transfer>
<Give Deck Status>	<Play>, <Deck Control>	<Deck Status>
<Give Device Vendor ID>	-	<Device Vendor ID>
<Give OSD Name>	-	<Set OSD Name>
<Give Physical Address>	-	<Report Physical Address>
<Give Preset List Version Number>	<Start Preset Transfer>, <Stop Preset Transfer>	<Actual Preset List Version Number>, <Set Analogue Preset>, <End Preset Transfer>
<Give System Info>	-	<Set System Info Version Number>, At least one of: <Set Country>, <Set Language>
<Give Timer Options>	-	<Timer Options>

IPR2024-001429
HP – EX1010, Page 169 of 193

If device does not <Feature Abort> the following message:	**It shall not <Feature Abort> the message(s):**	**It shall be able to send the message(s):**
<Give Tuner Device Status>	-	<Tuner Device Status>
<Image View On>	<Active Source>	-
<Menu Request>	<User Control Pressed>, <User Control Released>	<Menu Status>
<Menu Status>	-	<Menu Request>, <User Control Pressed>, <User Control Released>
<Play>	<Give Deck Status>, <Deck Control>	<Deck Status>
<Record Off>	<Record On>	<Record Status>
<Record On>	<Record Off>	<Record Status>
<Record Status>	-	<Record On>, <Record Off>
<Record TV Screen>	<Record Status>	<Record On>, <Record Off>
<Request Active Source>	-	<Active Source>
<Routing Change>	<Routing Information>	-
<Routing Information>	<Routing Change>	-
<Set Analogue Preset>	<End Preset Transfer>, <Actual Preset List Version Number>	<Start Preset Transfer>, <Stop Preset Transfer>, <Give Preset List Version Number>
<Set Country>	<Set System Info Version Number>	<Give System Info>
<Set Language>	<Set System Info Version Number>	<Give System Info>
<Set OSD Name>	-	<Give OSD Name>

IPR2024-001429
HP – EX1010, Page 170 of 193

If device does not <Feature Abort> the following message:	It shall not <Feature Abort> the message(s):	It shall be able to send the message(s):
<Set OSD String>	-	-
<Set Preset Name>	<Set Analogue Preset>, <End Preset Transfer>, <Actual Preset List Version Number>	<Start Preset Transfer>, <Stop Preset Transfer>, <Give Preset List Version Number>
<Set Stream Path>	-	<Active Source> (not CEC Switches)
<Set System Info Version Number>	At least one of: <Set Country>, <Set Language>	<Give System Info>
<Set Timer Program Title>	<Set Timer>, <Clear Timer>	<Timer Status>, <Timer Cleared Status>
<Set Timer>	<Clear Timer>	<Timer Status>, <Timer Cleared Status>
<Start Preset Transfer>	<Give Preset List Version Number>, <Stop Preset Transfer>	<Set Analogue Preset>, <End Preset Transfer>, <Actual Preset List Version Number>
<Start Timer Record Block Transfer>	-	<End Timer Record Block Transfer>, <Timer Record Block Transfer>, <Timer Record List Trigger>
<Stop Preset Transfer>	<Start Preset Transfer>, <Give Preset List Version Number>	<Set Analogue Preset>, <End Preset Transfer>, <Actual Preset List Version Number>
<Text View On>	<Active Source>	-
<Timer Cleared Status>	<Timer Status>	<Clear Timer>, <Set Timer>
<Timer Options>	-	<Give Timer Options>
<Timer Record Block Transfer>	<Timer Record List Trigger>, <End Timer Record Block Transfer>	<Start Timer Record Block Transfer>
<Timer Record List Trigger>	<Timer Record Block Transfer>, <End Timer Record Block Transfer>	<Start Timer Record Block Transfer>

IPR2024-001429
HP – EX1010, Page 171 of 193

If device does not <Feature Abort> the following message:	**It shall not <Feature Abort> the message(s):**	**It shall be able to send the message(s):**
<Timer Status>	<Timer Cleared Status>	<Set Timer>, <Clear Timer>
<Tuner Device Status>	-	<Give Tuner Device Status>
<Tuner Step Decrement>	<Tuner Step Increment>	-
<Tuner Step Increment>	<Tuner Step Decrement>	-
<User Control Pressed>	<User Control Released>	-
<User Control Released>	<User Control Pressed>	-
<Vendor Command>	<Device Vendor ID>	<Give Device Vendor ID>
<Vendor Remote Button Down>	<Vendor Remote Button Up>, <Device Vendor ID>	<Give Device Vendor ID>
<Vendor Remote Button Up>	<Vendor Remote Button Down>, <Device Vendor ID>	<Give Device Vendor ID>

IPR2024-001429
HP – EX1010, Page 172 of 193

CEC Table 7 Message dependencies when sending a message

If device ever sends the following message:	**It shall be able to send the message(s):**	**It shall not <Feature Abort> the message(s):**
<Actual Preset List Version Number>	<End Preset Transfer>, <Set Analogue Preset>	<Give Preset List Version Number>, <Start Preset Transfer>, <Stop Preset Transfer>
<Clear Timer>	<Set Timer>	<Timer Cleared Status>, <Timer Status>
<Deck Control>	<Play>	-
<Deck Status>	-	<Give Deck Status>, <Play>, <Deck Control>
<Device Vendor ID>	-	<Give Device Vendor ID>
<End Preset Transfer>	<Actual Preset List Version Number>, <Set Analogue Preset>	<Give Preset List Version Number>, <Start Preset Transfer>, <Stop Preset Transfer>
<End Timer Record Block Transfer>	<Timer Record Block Transfer>, <Timer Record List Trigger>	<Start Timer Record Block Transfer>
<Give Deck Status>	<Play>, <Deck Control>	<Deck Status>
<Give Device Vendor ID>	-	<Device Vendor ID>
<Give OSD Name>	-	<Set OSD Name>
<Give Physical Address>	-	<Report Physical Address>
<Give Preset List Version Number>	<Start Preset Transfer>, <Stop Preset Transfer>	<Actual Preset List Version Number>, <Set Analogue Preset>, <End Preset Transfer>
<Give System Info>	-	<Set System Info Version Number>, At least one of: <Set Country>, <Set Language>
<Give Timer Options>	-	<Timer Options>

IPR2024-001429
HP – EX1010, Page 173 of 193

If device ever sends the following message:	**It shall be able to send the message(s):**	**It shall not <Feature Abort> the message(s):**
<Give Tuner Device Status>	-	<Tuner Device Status>
<Image View On>	<Active Source>	-
<Menu Request>	<User Control Pressed>, <User Control Released>	<Menu Status>
<Menu Status>	-	<Menu Request>, <User Control Pressed>, <User Control Released>
<Play>	<Give Deck Status>, <Deck Control>	<Deck Status>
<Record Off>	<Record On>	<Record Status>
<Record On>	<Record Off>	<Record Status>
<Record Status>	-	<Record On>, <Record Off>
<Record TV Screen>	<Record Status>	<Record On>, <Record Off>
<Request Active Source>	-	<Active Source>
<Routing Change>	<Routing Information>	-
<Routing Information>	<Routing Change>	-
<Set Analogue Preset>	<End Preset Transfer>, <Actual Preset List Version Number>	<Start Preset Transfer>, <Stop Preset Transfer>, <Give Preset List Version Number>
<Set Country>	<Set System Info Version Number>	<Give System Info>
<Set Language>	<Set System Info Version Number>	<Give System Info>
<Set OSD Name>	-	<Give OSD Name>

IPR2024-001429
HP – EX1010, Page 174 of 193

If device ever sends the following message:	**It shall be able to send the message(s):**	**It shall not <Feature Abort> the message(s):**
<Set Preset Name>	<Set Analogue Preset>, <End Preset Transfer>, <Actual Preset List Version Number>	<Start Preset Transfer>, <Stop Preset Transfer>, <Give Preset List Version Number>
<Set Stream Path>	-	<Active Source> (not CEC Switches)
<Set System Info Version Number>	At least one of: <Set Country>, <Set Language>	<Give System Info>
<Set Timer Program Title>	<Set Timer>, <Clear Timer>	<Timer Status>, <Timer Cleared Status>
<Set Timer>	<Clear Timer>	<Timer Status>, <Timer Cleared Status>
<Start Preset Transfer>	<Give Preset List Version Number>, <Stop Preset Transfer>	<Set Analogue Preset>, <End Preset Transfer>, <Actual Preset List Version Number>
<Start Timer Record Block Transfer>	-	<End Timer Record Block Transfer>, <Timer Record Block Transfer>, <Timer Record List Trigger>
<Stop Preset Transfer>	<Start Preset Transfer>, <Give Preset List Version Number>	<Set Analogue Preset>, <End Preset Transfer>, <Actual Preset List Version Number>
<Text View On>	<Active Source>	-
<Timer Cleared Status>	<Timer Status>	<Clear Timer>, <Set Timer>
<Timer Options>	-	<Give Timer Options>
<Timer Record Block Transfer>	<Timer Record List Trigger>, <End Timer Record Block Transfer>	<Start Timer Record Block Transfer>
<Timer Record List Trigger>	<Timer Record Block Transfer>, <End Timer Record Block Transfer>	<Start Timer Record Block Transfer>
<Timer Status>	<Timer Cleared Status>	<Set Timer>, <Clear Timer>

IPR2024-001429
HP – EX1010, Page 175 of 193

If device ever sends the following message:	**It shall be able to send the message(s):**	**It shall not <Feature Abort> the message(s):**
<Tuner Device Status>	-	<Give Tuner Device Status>
<Tuner Step Decrement>	<Tuner Step Increment>	-
<Tuner Step Increment>	<Tuner Step Decrement>	-
<User Control Pressed>	<User Control Released>	-
<User Control Released>	<User Control Pressed>	-
<Vendor Command>	<Device Vendor ID>	<Give Device Vendor ID>
<Vendor Remote Button Down>	<Vendor Remote Button Up>, <Device Vendor ID>	<Give Device Vendor ID>
<Vendor Remote Button Up>	<Vendor Remote Button Down>, <Device Vendor ID>	<Give Device Vendor ID>

IPR2024-001429
HP – EX1010, Page 176 of 193

CEC 17 Operand Descriptions

In the following table, Operand Descriptions are ordered alphabetically. Sub-operands, which only occur in a single parent operand, are grouped with their parent and are shown indented.

IPR2024-001429
HP – EX1010, Page 177 of 193

CEC Table 8 Operand Descriptions.

Name	Range Description		Length	Purpose
[# Free Timer Blocks]	0x00 n 0xFF		1 byte	Indicates the number of timer blocks a device has free.
[# Timer Blocks]	0x00 n 0xFF		1 byte	Indicates the number of timer blocks a device can handle.
[Abort Reason]	“Unrecognized opcode”	0	1 byte	Reason for a <Feature Abort> response.
	“Not in correct mode to respond”	1		
	“Cannot provide source”	2		
	“Invalid operand”	3		
	“Refused”	4		
[Analogue Preset]	[Analogue Frequency] [Preset Related Data]		3 bytes	Identifies and specifies a particular tuner preset signal of an analogue tuner.
[Analogue Frequency]	0x0000<n<0xFFFF Frequency = 62.5n kHz		2 bytes	Used to specify the frequency used by an analogue terrestrial tuner.
[Preset Related Data]	[Reserved Bit] [Decoder Preset Indicator] [Favorite Indicator] [Broadcast System]		1 byte	Used to identify the data that is related to a tuner preset.
[Decoder Preset Indicator]	“Not present or not supported”	0	1 bit	Some tuner devices support the feature that a preset can be marked as a decoder present.
	”Decoder present and signal can be encoded”	1		
[Favorite Indicator]	“No”	0	1 bit	Some devices support the feature that a preset can be marked as a favorite preset. A follower is not required to use this information.
	”Yes or not supported”	1		

IPR2024-001429
HP – EX1010, Page 178 of 193

Name	Range Description		Length	Purpose
[Broadcast System]	0 n 31 – See CEC Table 10		5 bits	This specifies information about the color system, the sound carrier and the IF-frequency.
[ASCII digit]	0x30 n 0x39		1 byte	Subset of [ASCII] representing a printable digit character.
[ASCII]	0x20 n 0x7F		1 byte	Represents a printable character.
[Boolean]	“False”	0	1 bit	Flag
	“True”	1		
[Country]	0x0000 n 0xFFFF (n is defined in ITU-T E.164 Assigned Country Codes)		2 bytes	Specify the country in which the device is operating.
[Day of Month]	1 n 31		1 byte	Day of month.
[Deck Control Mode]	“Skip Forward / Wind Forward”	1	1 byte	Used in <Deck Control>. Note: The “Skip Forward / Wind Forward” and ”Skip Backward / Wind Backward” values are used for example in a DVD as next chapter and previous chapter and in a VCR as wind and rewind.
	“Skip Backward / Rewind”	2		
	“Stop”	3		
	“Eject”	4		
[Deck Info]	“Play”	0x11	1 byte	Indicates the current status of a tape or disk deck.
	“Record”	0x12		
	“Play Reverse”	0x13		
	“Still”	0x14		
	“Slow”	0x15		

IPR2024-001429
HP – EX1010, Page 179 of 193

Name	Range Description		Length	Purpose
	“Slow Reverse”	0x16		
	“Search Forward”	0x17		
	“Search Reverse”	0x18		
	“No Media”	0x19		
	“Stop”	0x1A		
	“Wind”	0x1B		
	“Rewind”	0x1C		
	“Index Search Forward”	0x1D		
	“Index Search Reverse”	0x1E		
	”Other Status”	0x1F		
[Device Type]	“TV”	0	1 byte	Allows additional devices, above the number allowed in the logical addressing mechanism, to indicate their device type.
	“Recording Device”	1		
	“STB”	3		
	“DVD”	4		
	“Audio System”	5		

IPR2024-001429
HP – EX1010, Page 180 of 193

Name	Range Description			Length	Purpose
[Display Control]	bit 5 – bit 0 = 0			1 byte	To indicate the display mode for an on screen display message.
		bit 7	bit 6		
	“Display for default time”	0	0		
	“Display until cleared”	0	1		
	“Clear previous message”	1	0		
	Reserved for future use	1	1		
[Feature Opcode]	0x00 n 0xFF (n is defined in CEC Table 5)			1 byte	Defines command to be performed.
[High/Low Quality Timer Programming]	“High Quality” (i.e. Short Play)		0	1 bit	Indicates if recording should be in high or low quality mode.
	”Low Quality” (i.e. Long Play)		1		
[Language]	2 {[ASCII]} as defined in ISO/FDIS 639-1 [ref 1n]			2 bytes	Specify the language with which to interact with the user.
[Menu Language]	[Language]			2 bytes	Specify the language with which to interact with the user.
[Menu Request Type]	“Activate”		0	1 byte	Specifies whether to activate or deactivate a devices menu or simply query its current menu status.
	“Deactivate”		1		
	“Query”		2		
[Menu State]	“Activated”		0	1 byte	Specifies the state of a device menu
	“Deactivated”		1		

IPR2024-001429
HP – EX1010, Page 181 of 193

Name	Range Description	Length	Purpose
[Month of Year]	1 n 12	1 byte	Month
[New Address]	[Physical Address]	2 bytes	The physical address of the new device selected by a CEC Switch.
[Original Address]	[Physical Address]	2 bytes	The physical address of the device de-selected by a CEC Switch.
[OSD Name]	N {[ASCII]}, 1≤N ≤ 8	1 - 8 bytes	The devices name - To be used in On Screen Display references to it.
[OSD String]	N {[ASCII]}, 1≤N ≤ 13	1 - 13 bytes	A string to be displayed on the display.
[Physical Address]	4{[Port ID]}	2 bytes	Defines the path between the TV and a device – thus giving it a physical address within the cluster.
[Port ID]	0x1 n 0xF	4 bits	Defines one 'hop' within the physical address relating to the physical connection of the device.
[PIL Code]	[PIL_High] [PIL_Mid] [PIL_Low]	3 bytes	The PIL number as defined in prETS300231 and is the time originally announced as the start of the program. Note PIL allocation is: bit 1 to bit 5 day bit 6 to bit 9 month bit 10 to bit 14 hour bit 15 to bit 20 minute Note: special code of 0b00000 11111 11111 11111 is used to indicate PDC/VPS off and that timing should therefore be done by the local timer.
[PIL_High]	PIL bit 1 to bit 8, bit 1 is MSb	1 byte	Part of PIL data.
[PIL_Mid]	PIL bit 9 to bit 16, bit 9 is MSb	1 byte	Part of PIL data.
[PIL_Low]	PIL bit 17 to bit 20, bit 17 is MSb bit 21 to bit 24 = 0b1111	1 byte	Part of PIL data.

IPR2024-001429
HP – EX1010, Page 182 of 193

Name	Range Description		Length	Purpose
[Play Mode]	“Play Forward”	0x24	1 byte	The mode in which to play media. Note: If a device does not support a particular play mode it should select the closest match.
	“Play Reverse”	0x20		
	“Play Still”	0x25		
	“Scan Forward Min Speed”	0x05		
	“Scan Forward Medium Speed”	0x06		
	“Scan Forward Max Speed”	0x07		
	“Scan Reverse Min Speed”	0x09		
	“Scan Reverse Medium Speed”	0x0A		
	“Scan Reverse Max Speed”	0x0B		
	“Slow Forward Min Speed”	0x15		
	“Slow Forward Medium Speed”	0x16		
	“Slow Forward Max Speed”	0x17		
	“Slow Reverse Min Speed”	0x19		
	“Slow Reverse Medium Speed”	0x1A		
	“Slow Reverse Max Speed”	0x1B		

IPR2024-001429
HP – EX1010, Page 183 of 193

Name	Range Description		Length	Purpose
[Preset List Info]	"Complete"	0	1 byte	The status of a preset transfer session at its completion.
	"All others virgin"	1		
	"Transfer interrupted"	2		
[Preset List Version Number]	0x00 n 0xFF		1 byte	The version number of a preset list (Modulo 256).
[Preset Name]	N {[ASCII]}, 1 ≤ N ≤ 12		1 - 12 bytes	The name of a preset.
[Preset Number]	0x0000 n 0xFFFF		2 bytes	The identifier for a tuner preset.
[Program Title String]	N {[ASCII]}, 1 ≤ N ≤ 14		1 - 14 bytes	Program title.
[Recording Sequence]	"One time"	0b00	2 bits	Indicates if recording is repeated and, if so, on what basis.
	"Weekly"	0b01		
	"Daily"	0b10		
	"Series"	0b11		
[Record Source]	[Record Source Type] | {[Record Source Type] [Preset Number] [Analogue Preset]}		-	To define the source for a recording.
[Record Source Type]	"Preset"	0	1 byte	Allows the record source to be specified for a recording.
	"Own source"	1		

IPR2024-001429
HP – EX1010, Page 184 of 193

Name	Range Description		Length	Purpose
[Record Status Info]	“Recording preset”	0x00	1 byte	Indicates the status of a recording.
	“Recording own source”	0x01		
	“Reserved”	0x02		
	“Reserved”	0x03		
	“Reserved”	0x04		
	“Reserved”	0x05		
	“No recording - invalid preset”	0x09		
	“No recording - no media”	0x10		
	“No recording - playing”	0x11		
	“No recording - already recording”	0x12		
	“No recording - media protected”	0x13		
	“No recording - no source”	0x14		
	“No recording - media problem”	0x15		
	“No recording - other reason”	0x1F		

IPR2024-001429
HP – EX1010, Page 185 of 193

Name	Range Description		Length	Purpose
[Recording Status]	bit 7 - bit 1: [Reserved Bit].		1 byte	Used in <Timer Record Block Transfer>.
		bit 0		
	”Recording of this block not busy”	0		
	“Recording of this block busy”	1		
[Reserved Bit]	0		1 bit	Used as padding bit for future extensions.
[Series Code]	0x00 n 0xFF		1 byte	Series code. (e.g. for PDC)
[Start Time]	[Time]		2 bytes	Indicates the start time for a timer based recording.
[Status Request]	“On”	1	1 byte	Contains the status request mode which can be report once or on all future state changes or reporting off.
	“Off”	2		
	“Once”	3		
[Stop Time]	[Time]		2 bytes	Indicates the end time for a timer based recording.
[Subtitle Language]	[Language]		2 bytes	Specify the language in which to supply sub-titles.
[System Info Version Number]	0x00 n 0xFF		1 byte	The version number of a system info stored in the TV (Modulo 256).
[Time]	[Hour][Minute]		2 bytes	Time of day
[Hour]	0 n 23		1 byte	Hours
[Minute]	0 n 59		1 byte	Minutes

IPR2024-001429
HP – EX1010, Page 186 of 193

Name	Range Description		Length	Purpose
[Timer Block Related Data]	3{[Reserved Bit]} [High/Low Quality Timer Programming] [Controlled Record Start - Block] [Recording Sequence]		1 byte	Identifies data that is related to timer block.
[Controlled Record Start – Block]	"No controlled start used on this block"	0b00	2 bits	Indicates type of controlled record start used, if any.
	"PDC"	0b01		
	"Video Programming System"	0b10		
	"Either PDC or VPS"	0b11		
[Timer Cleared Status Data]	"Timer cleared" = 0b1xxxxxxx. "Timer not cleared" = 0b0xxxxxxx. Reason: No matching = 0b00000001		1 byte	Indicates status in a <Timer Cleared Status> message.
[Timer List Info]	"Transfer complete, free timer blocks left"	0	1 byte	Used in <End Timer Record Block Transfer> message.
	"Transfer complete, list empty"	1		
	"Transfer interrupted"	2		
	"Transfer complete, all timer blocks occupied"	3		
[Timer Options]	[Daily Programming type] [Series Programming Supported] [Daily Programming Supported] [Weekly Programming Supported] [Reserved] [VPS Supported] [PDC Supported] [Low Quality Supported]		1 byte	Describes the Timer functions available for a recording device

IPR2024-001429
HP – EX1010, Page 187 of 193

Name	Range Description		Length	Purpose
[Daily Programming type]	"All 7 days of the week"	0	1 bit	Type of daily timer.
	"Only Monday to Friday"	1		
[Series Programming Supported]	[Boolean]		1 bit	Indicates if series programming is supported.
[Daily Programming Supported]	[Boolean]		1 bit	Indicates if daily repeat programming is supported.
[Weekly Programming Supported]	[Boolean]		1 bit	Indicates if weekly repeat programming is supported
[VPS Supported]	[Boolean]		1 bit	Indicates if VPS standard is supported
[PDC Supported]	[Boolean]		1 bit	Indicates if PDC standard is supported.
[Low Quality Supported]	[Boolean]		1 bit	Indicates if low quality (i.e. Long Play) is supported.
[Timer Related Data]	3{[Reserved Bit]} [High/Low Quality Timer Programming] [Controlled Record Start] [Recording Sequence]		1 byte	Identifies data that is related to timer programming.
[Controlled Record Start]	"Not supported"	0b00	2 bits	Indicates type of controlled record start to be used, if any.
	"PDC"	0b01		
	"Video Programming System"	0b10		
	"Reserved"	0b11		

IPR2024-001429
HP – EX1010, Page 188 of 193

Name	Range Description		Length	Purpose
[Timer Status Data]	[High/Low Quality supported] [Timer overlap warning] [Media Info] [Timer Programmed Info]		1 byte	Used by a recoding device to respond to the initiator of a <Set Timer> message.
[High/Low Quality Supported]	“Not supported”	0	1 bit	Indicates if the recording device has used the High Quality/Low Quality setting as requested.
	”As requested”	1		
[Timer Overlap Warning]	“No overlap”	0	1 bit	Indicates is there is another timer block already set which overlaps with this new recording request.
	”Timer blocks overlap”	1		
[Media Info]	“Media present and not protected”	0b00	2 bits	Indicates if removable media is present and its write protect state.
	“Media present, but protected”	0b01		
	“Media not present”	0b10		
	Future Use	0b11		
[Timer Programmed Info]	[Programmed Indicator] {[Programmed Info] | [Not Programmed Error Info]}		4 bits	Gives information about how and if the programming request has been done. [Programmed Indicator] is used as a selector for the second parameter.
[Programmed Indicator]	“Not programmed”	0	1 bit	Selector for [Timer Programmed Info].
	”Programmed”	1		
[Programmed Info]	Future Use	0b0xx	3 bits	Information indicating any non-fatal issues with the programming request.
	“Media info not supported”	0b100		
	“Enough media available for recording”	0b101		

IPR2024-001429
HP – EX1010, Page 189 of 193

Name		Range Description		Length	Purpose
		"Not enough media available for recording"	0b110		
		Future Use	0b111		
	[Not Programmed Error Info]	Future Use	0b000	3 bits	Reason for programming failure.
		"Daily error"	0b001		
		"No free timer available"	0b010		
		"Illegal preset"	0b011		
		"Clock failure"	0b100		
		"Date out of range"	0b101		
		"Series programming not supported"	0b110		
		"Other reason"	0b111		
[Tuner Device Info]		[Tuner Display Info][Preset Number]		3 bytes	Indicates information about the tuner. Indicates the preset number that the tuner is set to, regardless of whether or not it is currently displaying the tuner.
	[Tuner Display Info]	"Displaying tuner"	0	1 byte	Indicates if the device is currently displaying its tuner or not (it may for example be displaying an external source or media).
		"Not displaying tuner"	1		
[UI Command]		0x00 n 0xFF (n is defined in CEC Table 9)		1 byte	Indicates the remote control button pressed.

IPR2024-001429
HP – EX1010, Page 190 of 193

Name	Range Description	Length	Purpose
[Vendor ID]	0x000 n 0xFFF (n is the 24-bit unique company ID [ref. 3i] obtained from the IEEE Registration Authority Committee (RAC)).	3 bytes	Identifier for a specific Vendor.

Notes: Items are transmitted in the order shown in the description.
All bit descriptions are done most significant bit first (i.e. first bit described is sent first)

IPR2024-001429
HP – EX1010, Page 191 of 193

CEC Table 9 User Control Codes

Operation id	User Operation
0x00	**Select**
0x01	**Up**
0x02	**Down**
0x03	**Left**
0x04	**Right**
0x05	**Right-Up**
0x06	**Right-Down**
0x07	**Left-Up**
0x08	**Left-Down**
0x09	Root Menu
0x0A	Setup Menu
0x0B	Contents Menu
0x0C	Favorite Menu
0x0D	**Exit**
0x0E - 0x1F	Reserved
0x20 - 0x29	**Numbers 0-9**
0x2A	Dot
0x2B	Enter
0x2C	Clear
0x2D - 0x2F	Reserved
0x30	Channel Up
0x31	Channel Down

Operation id	User Operation
0x32	Previous Channel
0x33	Sound Select
0x34	Input Select
0x35	Display Information
0x36	Help
0x37	Page Up
0x38	Page Down
0x39 - 0x3F	Reserved
0x40	Power
0x41	Volume Up
0x42	Volume Down
0x43	Mute
0x44	Play
0x45	Stop
0x46	Pause
0x47	Record
0x48	Rewind
0x49	Fast forward
0x4A	Eject
0x4B	Forward
0x4C	Backward
0x4D - 0x4F	Reserved

Operation id	User Operation
0x50	Angle
0x51	Sub picture
0x52 - 0x5F	Reserved
0x60	Play Function
0x61	Pause-Play Function
0x62	Record Function
0x63	Pause-Record Function
0x64	Stop Function
0x65	Mute Function
0x66	Restore Volume Function
0x67	Tune Function
0x68	Select Disk Function
0x69	Select A/V Input Function
0x6A	Select Audio Input Function
0x6B - 0x70	Reserved
0x71	**F1 (Blue)**
0x72	**F2 (Red)**
0x73	**F3 (Green)**
0x74	**F4 (Yellow)**
0x75	**F5**
0x76 - 0x7F	Reserved

Note: The elements identified in **bold** are the only ones which are forwarded as part of the device menu control feature.

IPR2024-001429
HP – EX1010, Page 192 of 193

CEC Table 10 Broadcast System

System	Value	Bits 43210	Sound Carrier	Sound Modulation	Video Modulation	Vertical Frequency	Color sub-carrier
PAL B/G	0	00000	5.5 MHz	FM	neg	50 Hz	4.43 MHz
SECAM L'	1	00001	6.5 MHz	AM	pos	50 Hz	[7]
PAL M	2	00010	4.5 MHz	FM	neg	60 Hz	3.5756MHz
NTSC M	3	00011	4.5 MHz	FM	neg	60 Hz	3.5795MHz
PAL I	4	00100	6.0 MHz	FM	neg	50 Hz	4.43 MHz
SECAM DK	5	00101	6.5 MHz	FM	neg	50 Hz	[7]
SECAM B/G	6	00110	5.5 MHz	FM	neg	50 Hz	[7]
SECAM L	7	00111	6.5 MHz	AM	pos	50 Hz	[7]
PAL DK	8	01000	6.5 MHz	FM	neg	50 Hz	4.43 MHz
Future use	9	01001					
..	..	..					
Future use	30	11110					
Other System [8]	31	11111					

[7] Color sub-carriers SECAM: f_{OB} 4.25 MHz, f_{OR} 4.406 MHz
[8] The system is not defined. The receiving device decides locally what to do.

IPR2024-001429
HP – EX1010, Page 193 of 193