US010562222B2

(12) **United States Patent**
Wallace

(10) **Patent No.: US 10,562,222 B2**
(45) **Date of Patent: Feb. 18, 2020**

(54) **FORMED THERMOPLASTIC ARTICLE HAVING SMOOTH EDGES**

(71) Applicant: **Converter Manufacturing, LLC**, Orwigsburg, PA (US)

(72) Inventor: **Millard F. Wallace**, Orwigsburg, PA (US)

(73) Assignee: **Converter Manufacturing, LLC**, Orwigsburg, PA (US)

(*) Notice: Subject to any disclaimer, the term of this patent is extended or adjusted under 35 U.S.C. 154(b) by 133 days.

(21) Appl. No.: **15/445,220**

(22) Filed: **Feb. 28, 2017**

(65) **Prior Publication Data**

US 2017/0165896 A1 Jun. 15, 2017

Related U.S. Application Data

(63) Continuation-in-part of application No. PCT/US2016/049692, filed on Aug. 31, 2016.
(Continued)

(51) **Int. Cl.**
B29C 51/30 (2006.01)
B29C 51/08 (2006.01)
(Continued)

(52) **U.S. Cl.**
CPC ***B29C 51/306*** (2013.01); ***B29C 51/082*** (2013.01); ***B29C 51/20*** (2013.01);
(Continued)

(58) **Field of Classification Search**
CPC B29C 51/306; B29C 51/082; B29C 51/20; B29C 51/42; B29C 47/0026;
(Continued)

(56) **References Cited**

U.S. PATENT DOCUMENTS

2,891,280 A 6/1959 Politis
2,960,134 A 11/1960 Fornas
(Continued)

FOREIGN PATENT DOCUMENTS

FR 2424805 11/1979
GB 1388710 3/1975
(Continued)

OTHER PUBLICATIONS

Search Report for European patent application 16 842 900.9 of Wallace, dated Jul. 3, 2019.
(Continued)

Primary Examiner — Yan Lan
(74) *Attorney, Agent, or Firm* — Converter Manufacturing, LLC; Gary D. Colby

(57) **ABSTRACT**

The disclosure relates to forming shaped thermoplastic articles having smooth peripheries. Many thermoplastic articles have sharp edges formed upon molding or cutting the article from a feedstock sheet. Such sharp edges can damage thin plastic films or flesh which they contact, and smoothing the edges is desirable. Described herein are methods of forming a smooth periphery for such sharp-edged articles by rolling over the sharp edge. The smoothing operation is performed by forming a deflectable flange including a bend region separated from the potentially sharp peripheral edge by a spacer, deflecting a portion of the deflectable flange, and softening at least one bent portion of the deflectable flange to yield a smooth periphery upon cooling.

21 Claims, 29 Drawing Sheets

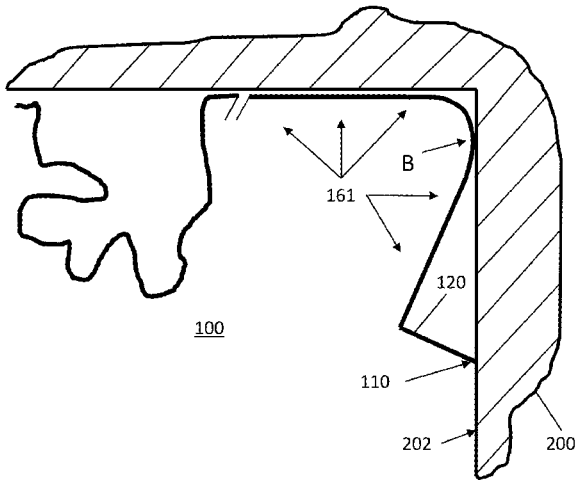

Related U.S. Application Data

(60) Provisional application No. 62/212,367, filed on Aug. 31, 2015.

(51) **Int. Cl.**

B65D 43/02	(2006.01)
B65D 1/34	(2006.01)
B29C 51/20	(2006.01)
B29C 51/42	(2006.01)
B65D 1/42	(2006.01)
B29K 101/12	(2006.01)
B29K 105/00	(2006.01)
B29L 31/00	(2006.01)

(52) **U.S. Cl.**
CPC ***B29C 51/42*** (2013.01); ***B65D 1/34*** (2013.01); ***B65D 1/42*** (2013.01); ***B65D 43/0204*** (2013.01); *B29K 2101/12* (2013.01); *B29K 2105/256* (2013.01); *B29L 2031/712* (2013.01)

(58) **Field of Classification Search**
CPC B29C 47/0054; B29C 47/068; B29C 47/8835; B29C 47/8885; B29C 51/14; B29C 51/265; B29K 2101/12; B29K 2105/256; B29L 2031/712; B65D 1/34; B65D 1/42; B65D 43/0204; B65D 1/265; B65D 1/40; B65D 21/0212; B65D 21/0233; B65D 53/06; B65D 77/2024; B65D 81/20; B32B 27/08; B32B 3/266; B32B 7/06
See application file for complete search history.

(56) **References Cited**

U.S. PATENT DOCUMENTS

3,096,546	A	7/1963	Edwards
3,192,565	A	7/1965	Rukavina
3,291,361	A	12/1966	Commeyras
3,355,536	A	11/1967	Midgley
3,357,053	A	12/1967	Lyon
3,423,231	A	1/1969	Lutzmann
3,466,214	A	9/1969	Polk
3,497,917	A	3/1970	Negoro
3,522,877	A	8/1970	Phillips
3,568,254	A	3/1971	Stolki
3,580,413	A	5/1971	Quackenbush
3,695,806	A	10/1972	Arfert
3,767,507	A	10/1973	Stahlecker
3,834,606	A	9/1974	Andersson
3,947,205	A	3/1976	Edwards
4,182,462	A	1/1980	Buff
4,281,979	A	8/1981	Doherty
4,349,124	A	9/1982	Faller
4,349,146	A	9/1982	Holden
4,358,492	A	11/1982	Perkins
4,419,320	A	12/1983	Perkins
4,533,585	A	8/1985	Holden
4,621,513	A	11/1986	Bradford
4,889,231	A	12/1989	Foote
5,098,751	A	3/1992	Tamura
5,118,277	A	6/1992	Padovani
5,375,701	A	12/1994	Hustad
5,758,773	A	6/1998	Clements
5,919,496	A	7/1999	Padovani
5,972,447	A	10/1999	Hata
5,976,682	A	11/1999	Eichbauer
6,234,386	B1	5/2001	Drummond
6,482,452	B1	11/2002	Weller
6,598,740	B1	7/2003	Wiegers
6,737,003	B1	5/2004	Golden
6,983,575	B2	1/2006	Longo
7,395,923	B2	7/2008	Chou
7,921,992	B2	4/2011	LaRue
8,474,610	B1	7/2013	Knight
8,920,892	B2	12/2014	Hernandez
9,302,842	B2	4/2016	Wallace
9,908,281	B1	3/2018	Wallace
10,076,865	B2	9/2018	Wallace
10,118,332	B2	11/2018	Wallace
10,189,624	B2	1/2019	Wallace
2002/0007902	A1	1/2002	Nance
2002/0119334	A1	8/2002	Shepard
2002/0127295	A1	9/2002	Padovani
2003/0041955	A1	3/2003	Spengler
2004/0043165	A1	3/2004	Van Hulle
2004/0144482	A1	7/2004	Cherpinsky
2006/0172095	A1	8/2006	Elsaesser
2009/0291174	A1	11/2009	Lewis
2011/0266168	A1	11/2011	Longo
2012/0085069	A1	4/2012	Mader
2012/0119404	A1	5/2012	Wallace
2012/0291712	A1	11/2012	Wallace
2013/0064998	A1*	3/2013	Wnek B21D 22/26 428/34.1
2013/0113137	A1	5/2013	Bissoli
2013/0142975	A1	6/2013	Wallace
2014/0054292	A1	2/2014	Wallace
2015/0001127	A1	1/2015	Nelson
2017/0001786	A1	1/2017	Wallace

FOREIGN PATENT DOCUMENTS

WO	96/01179	A1	1/1996
WO	2012/064203	A2	5/2012
WO	2017053937	A1	3/2017

OTHER PUBLICATIONS

Office Action for Canadian Patent Application 2,996,864, dated Jun. 19, 2019.

* cited by examiner

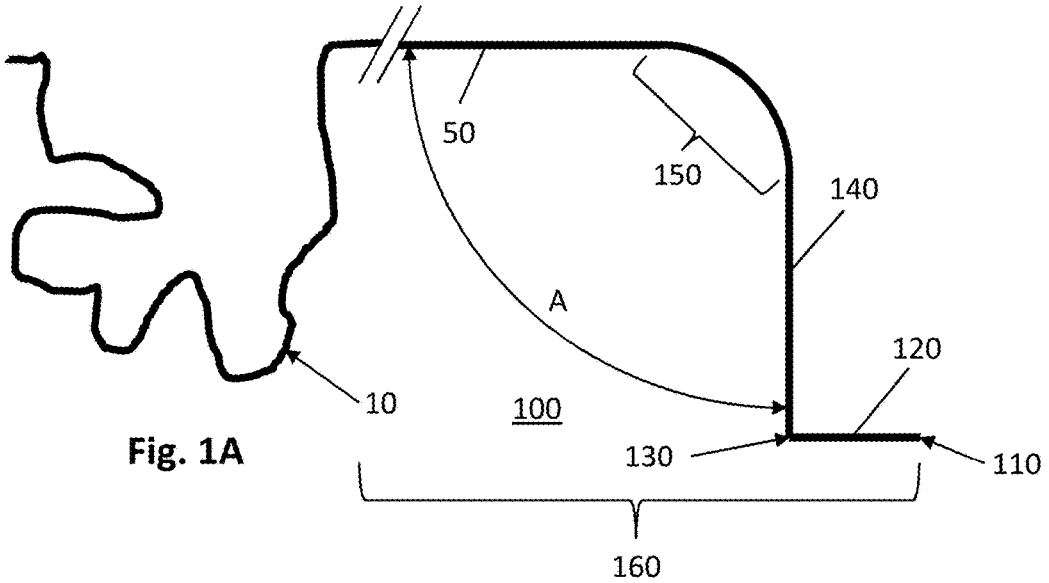

Fig. 1A

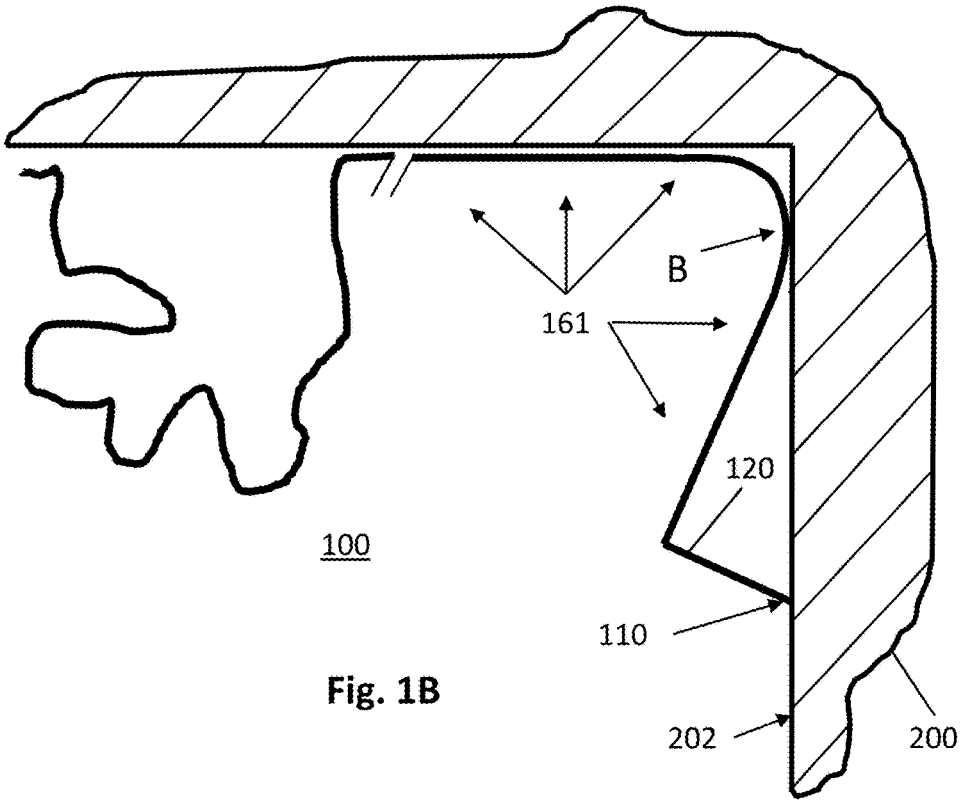

Fig. 1B

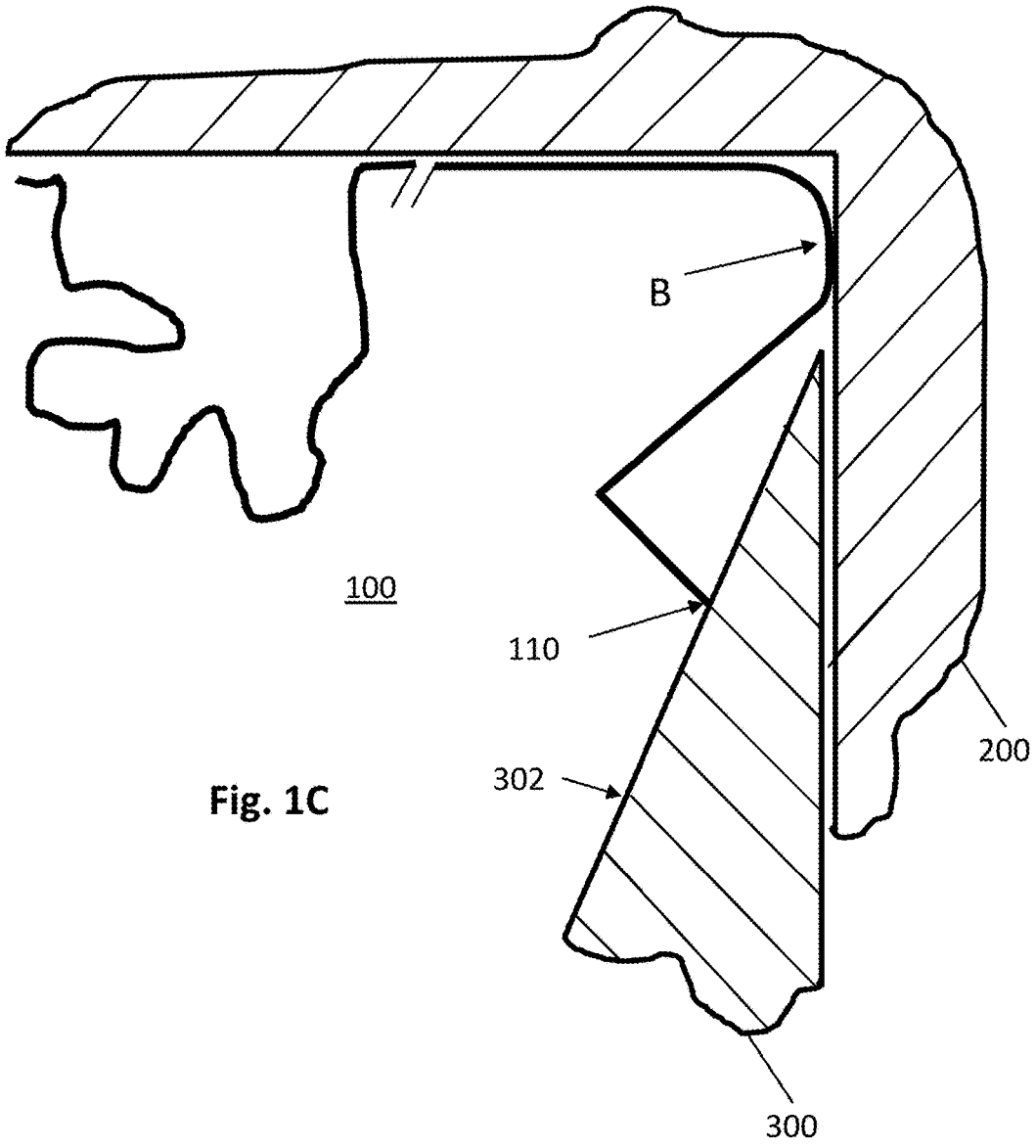

Fig. 1C

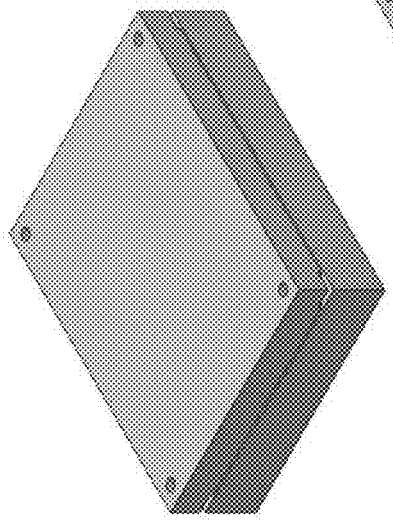

Fig. 2B

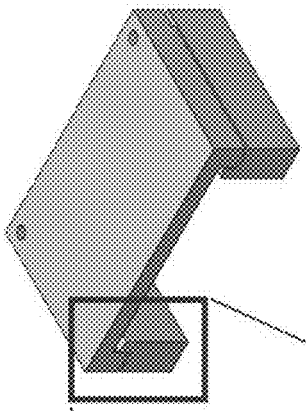

Fig. 2C

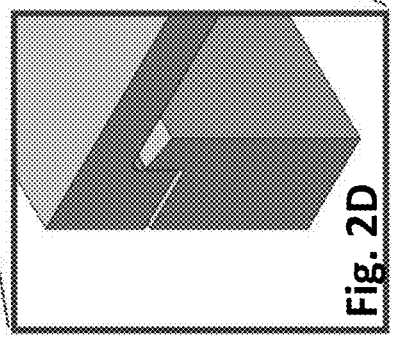

Fig. 2D

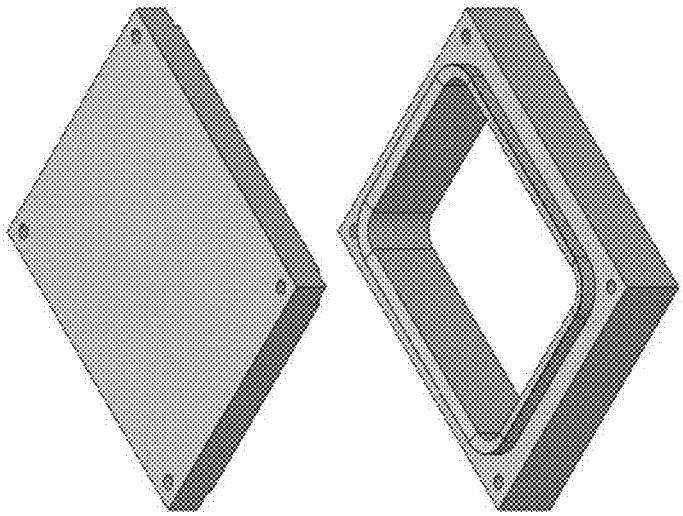

Fig. 2A

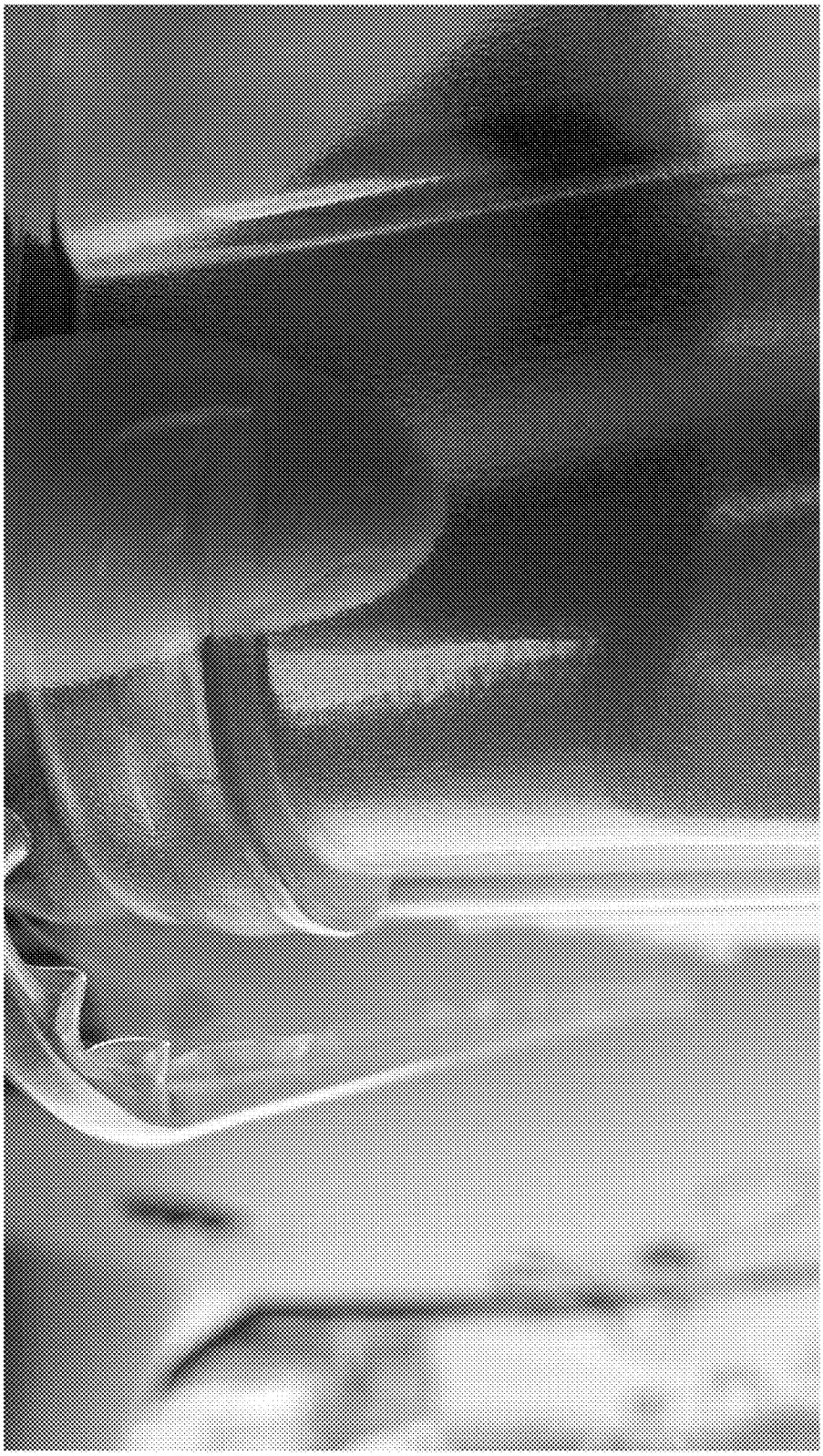

Fig. 3A

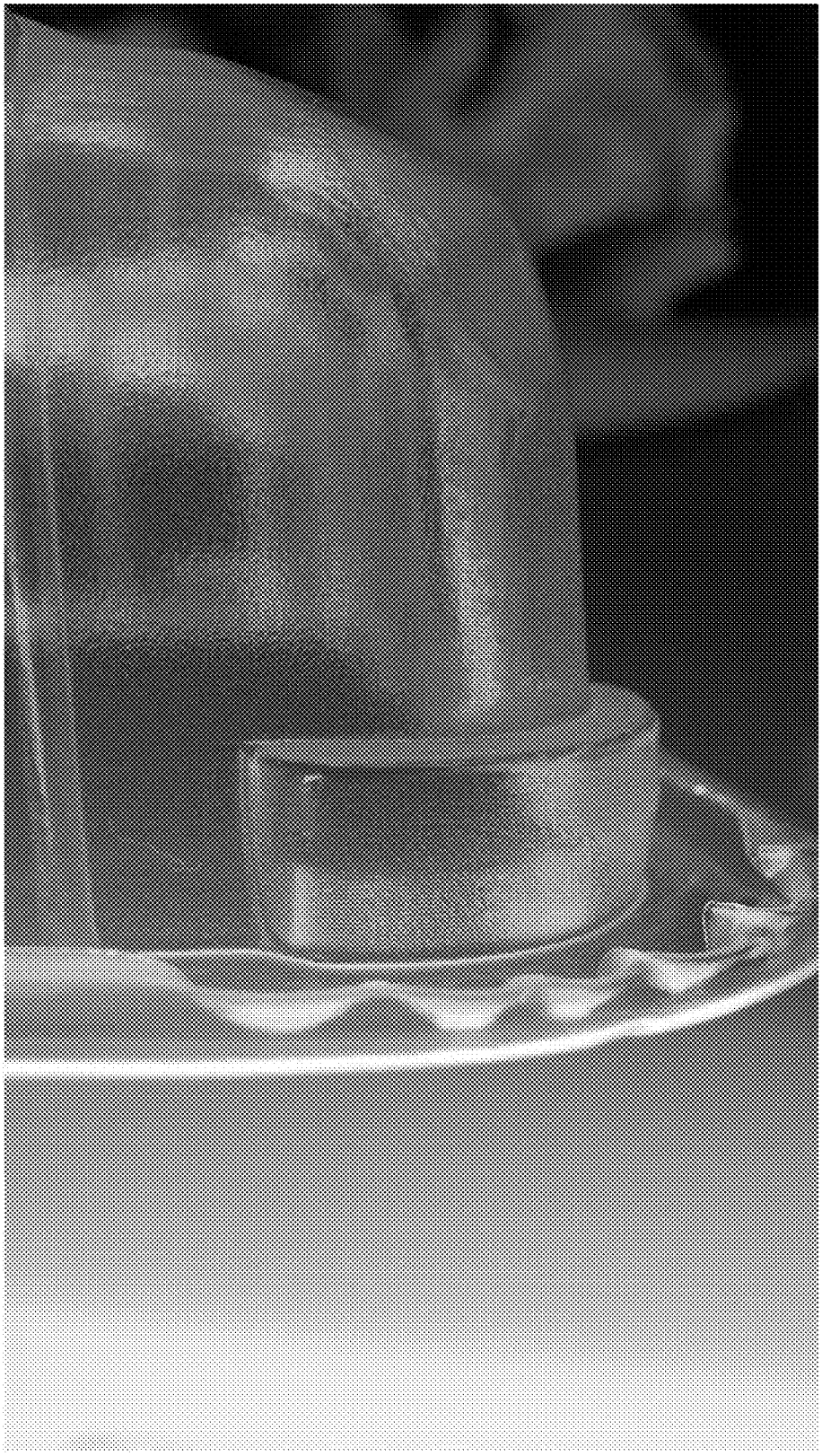

Fig. 3B

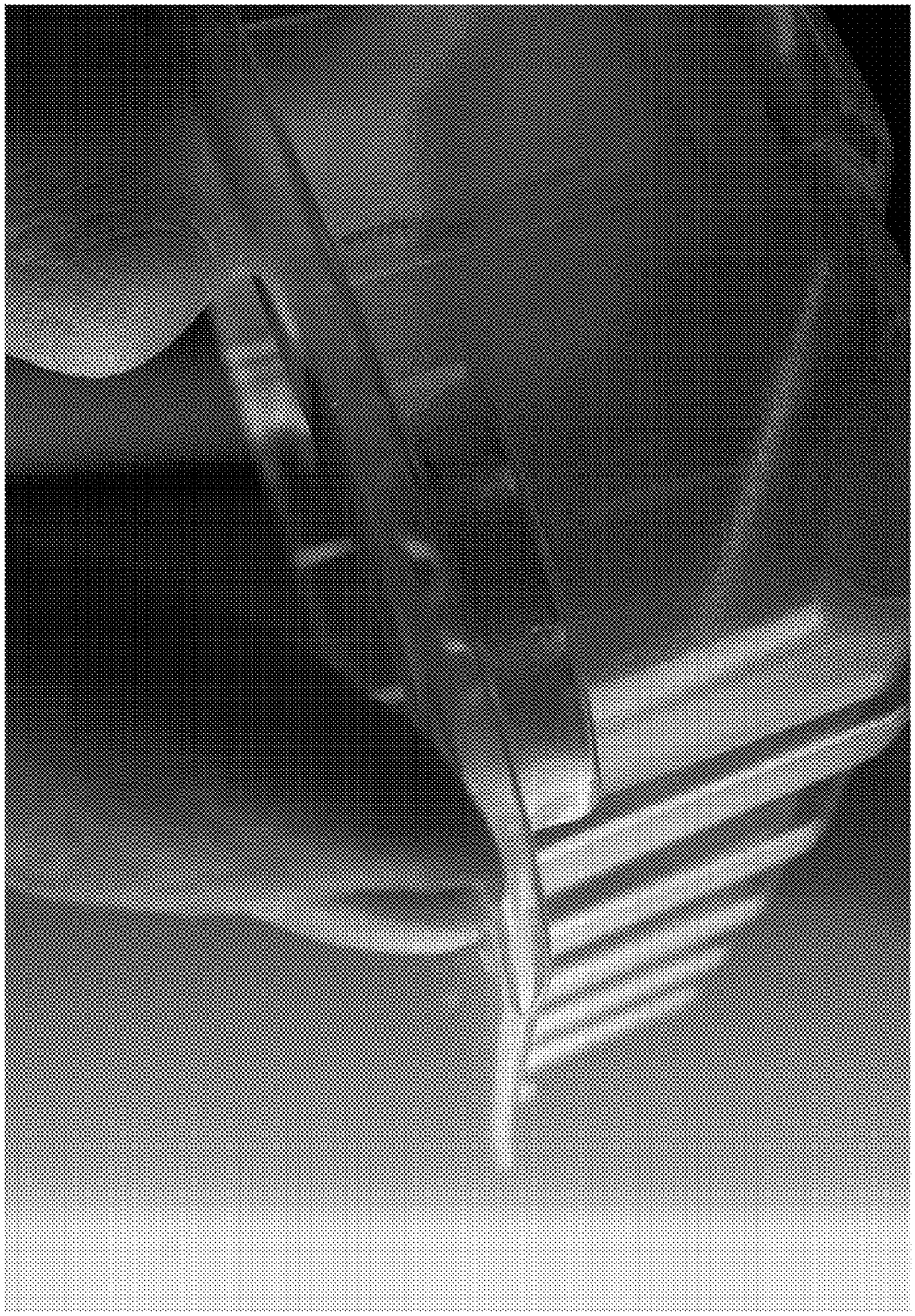

Fig. 3C

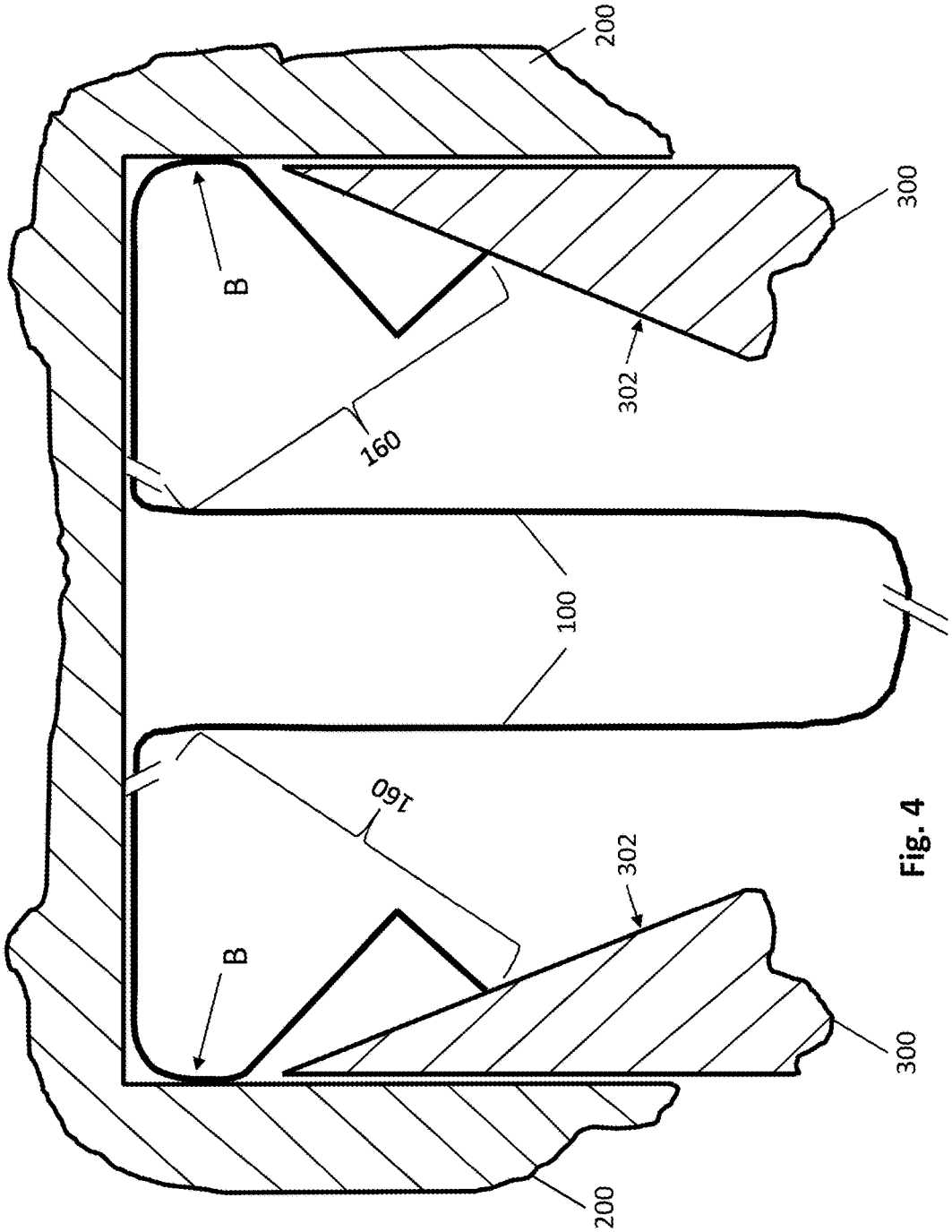

Fig. 4

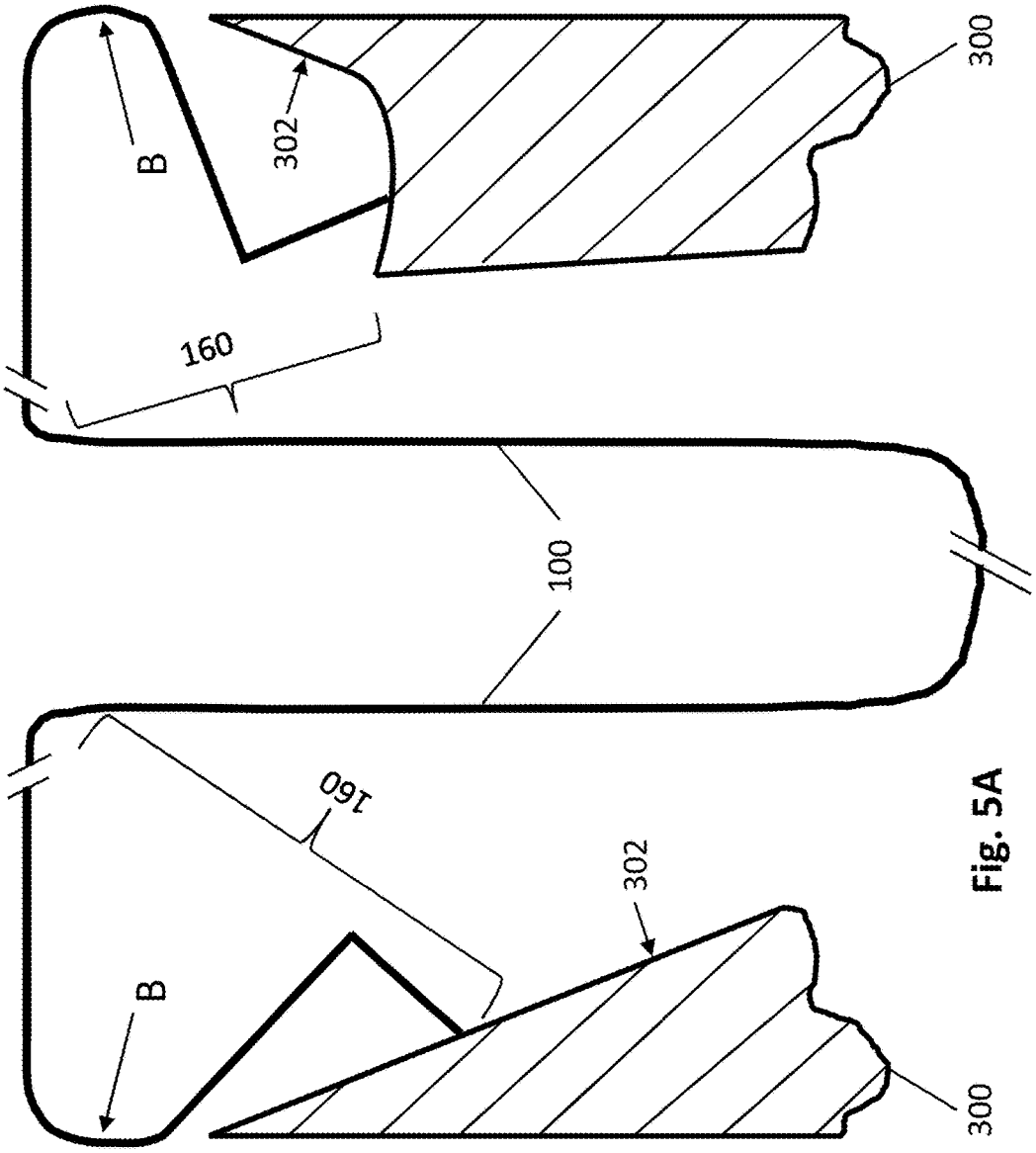

Fig. 5A

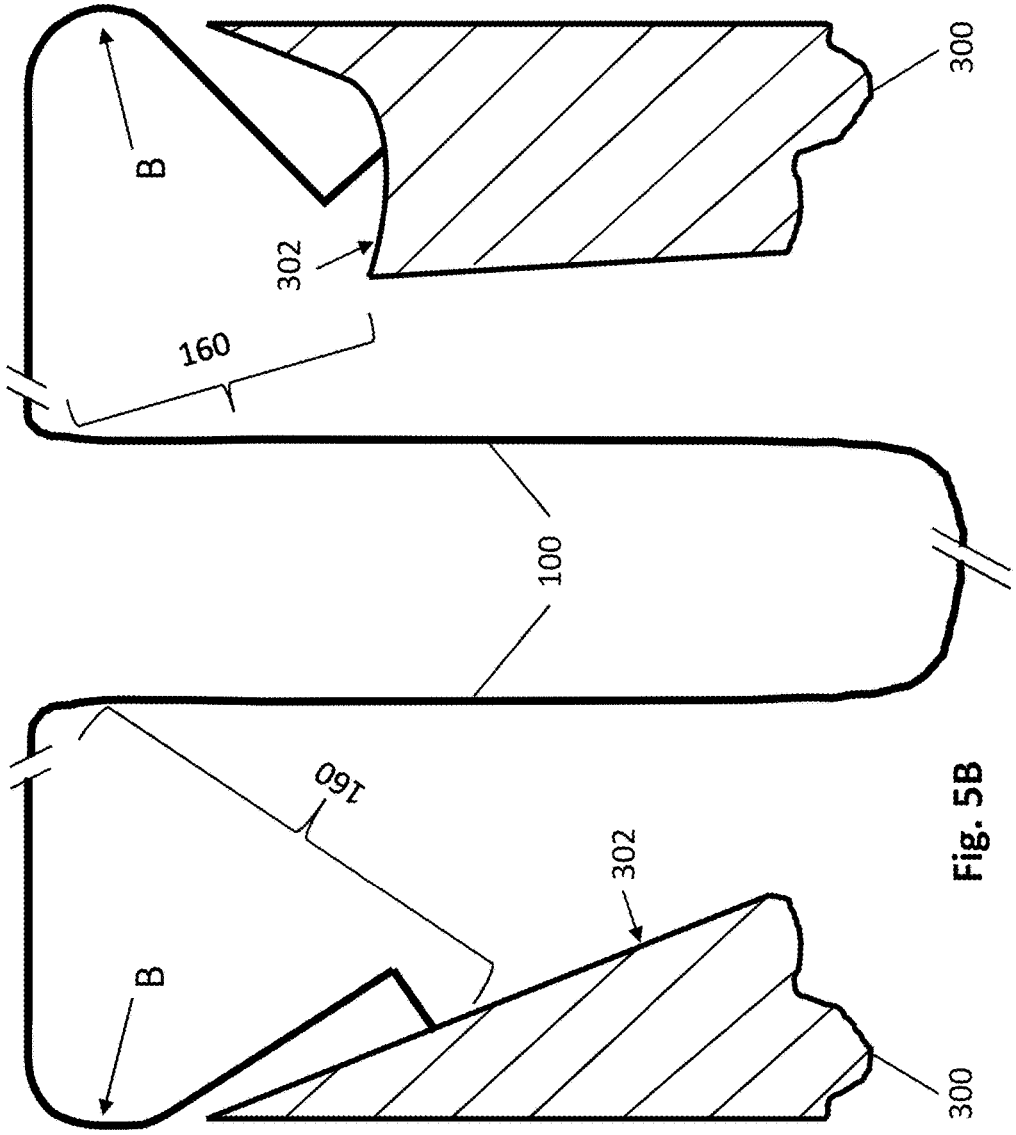

Fig. 5B

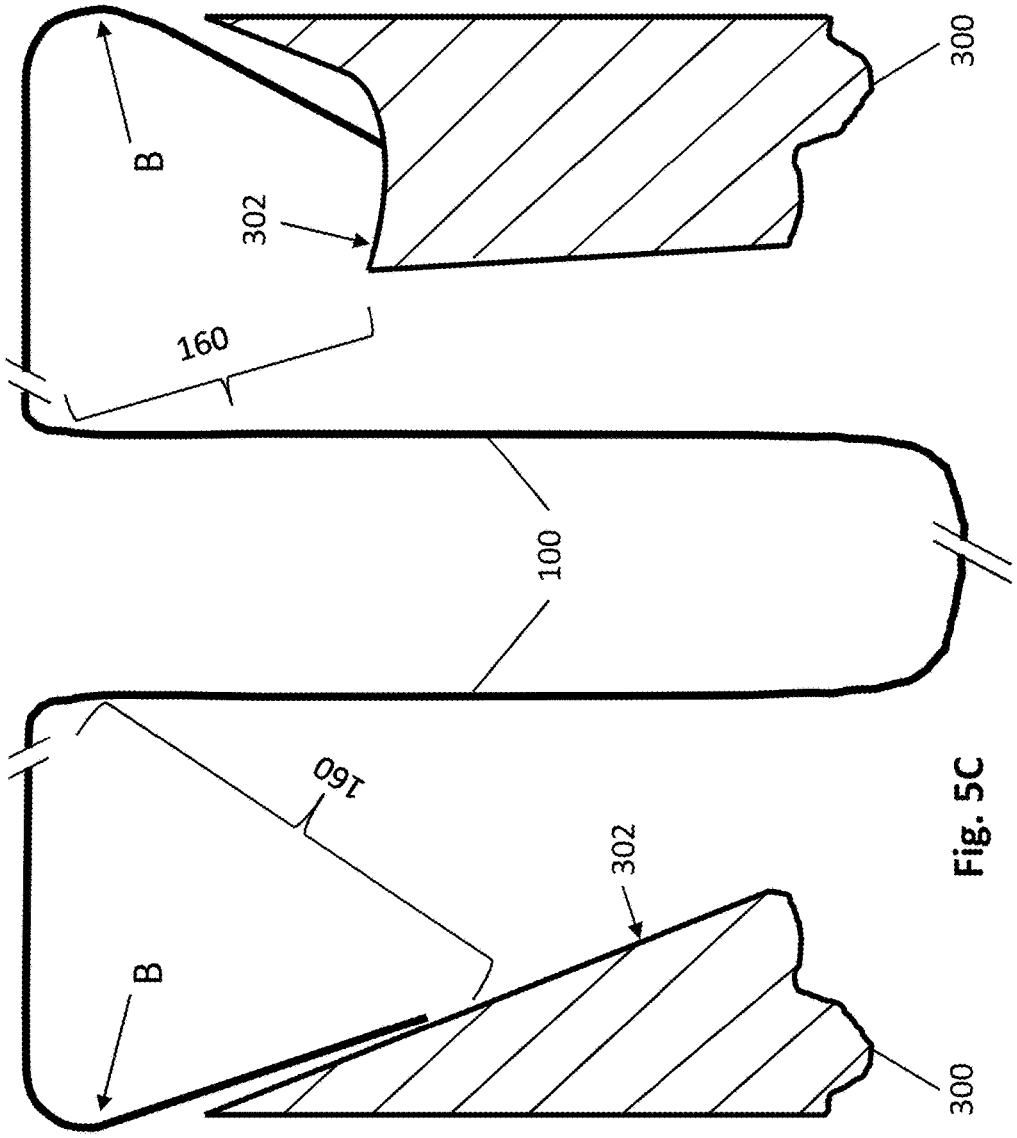

Fig. 5C

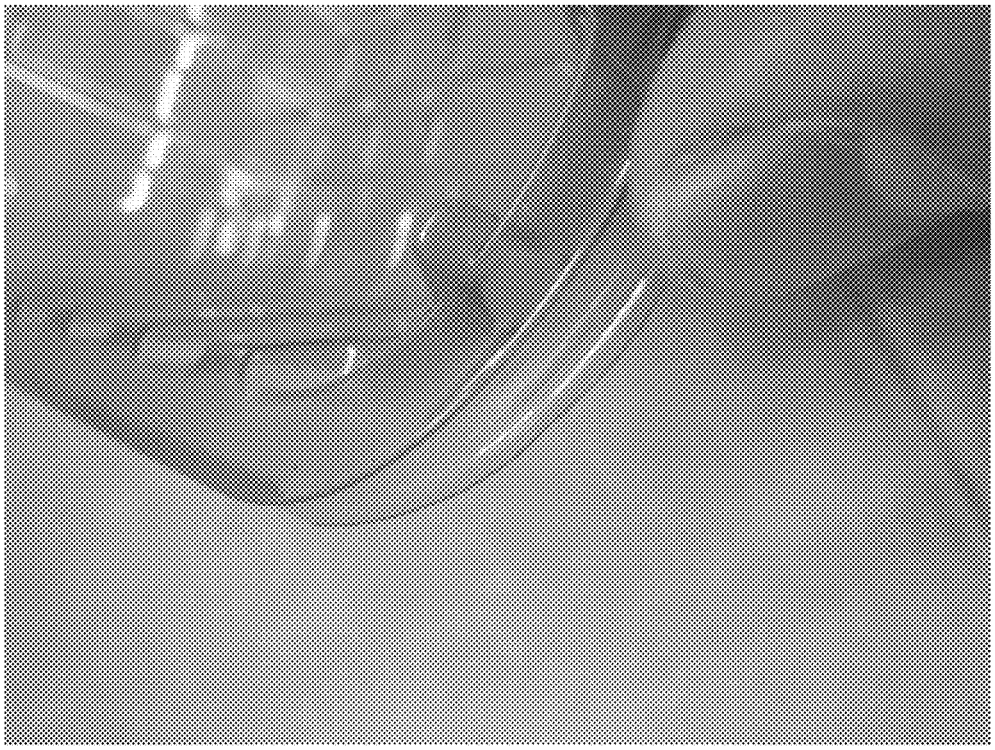

Fig. 6A

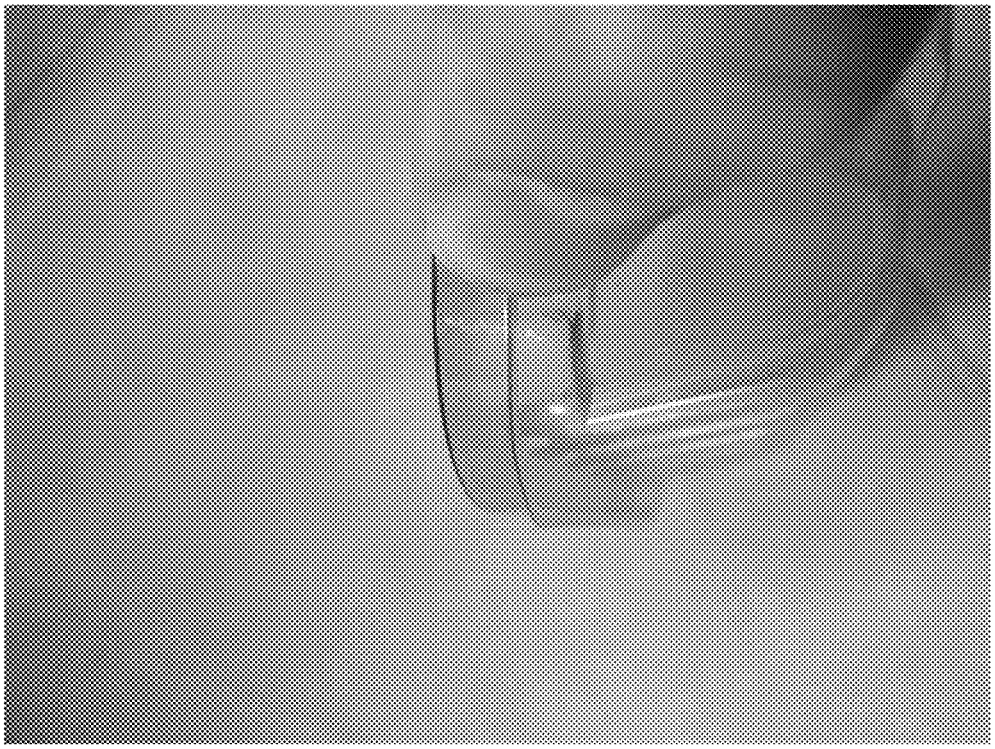

Fig. 6B

Fig. 6C

Fig. 6D

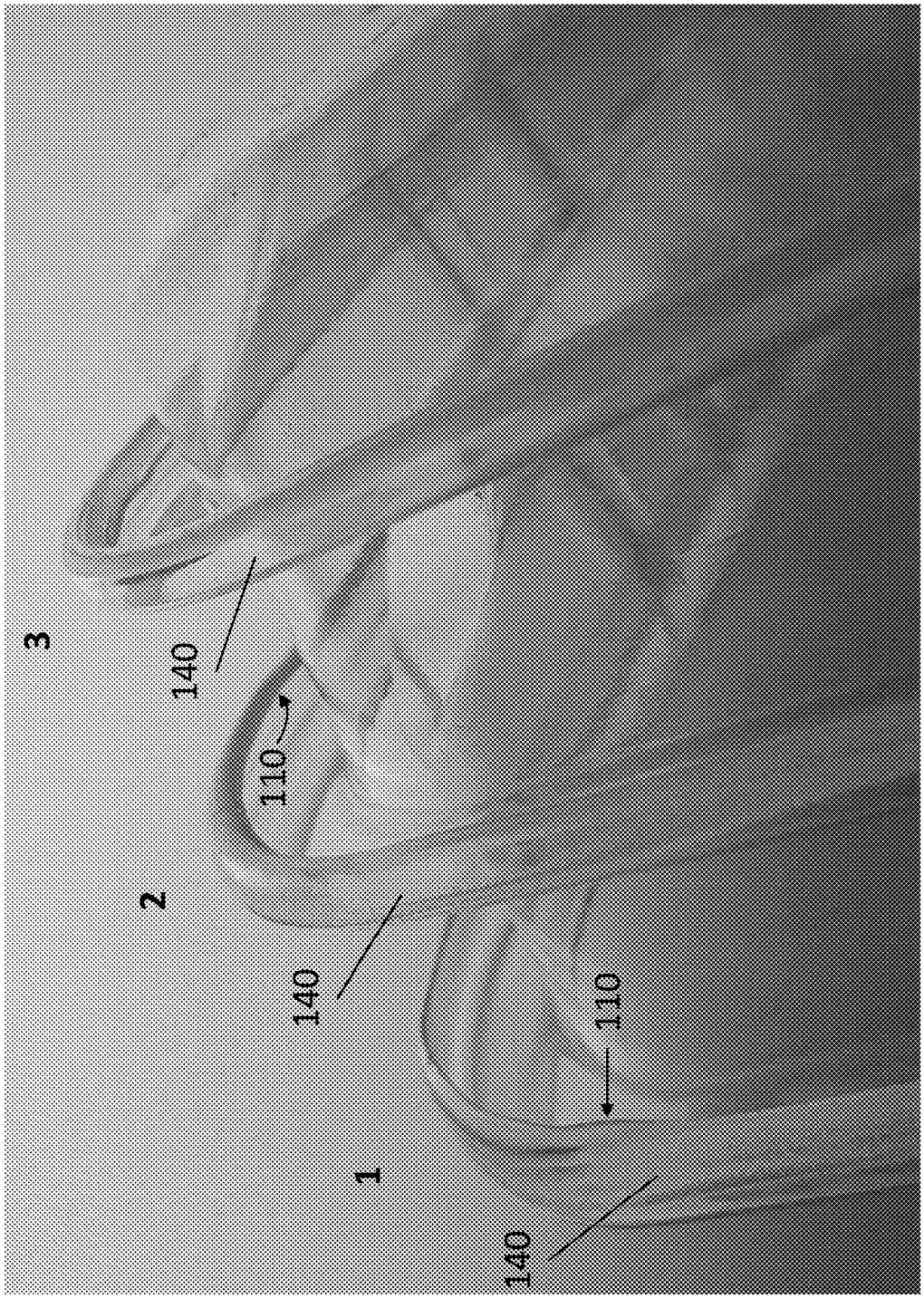

Fig. 6E

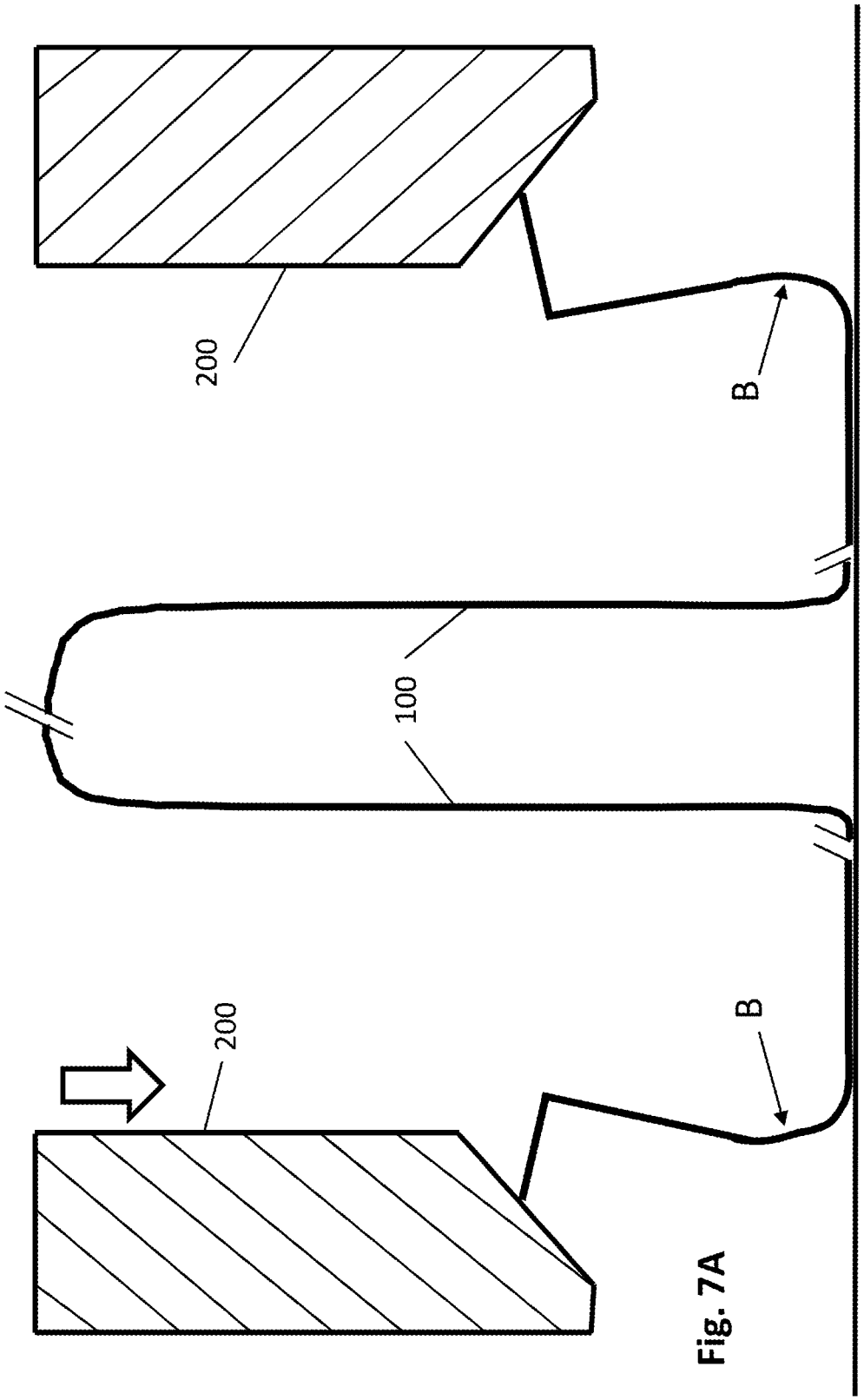

Fig. 7A

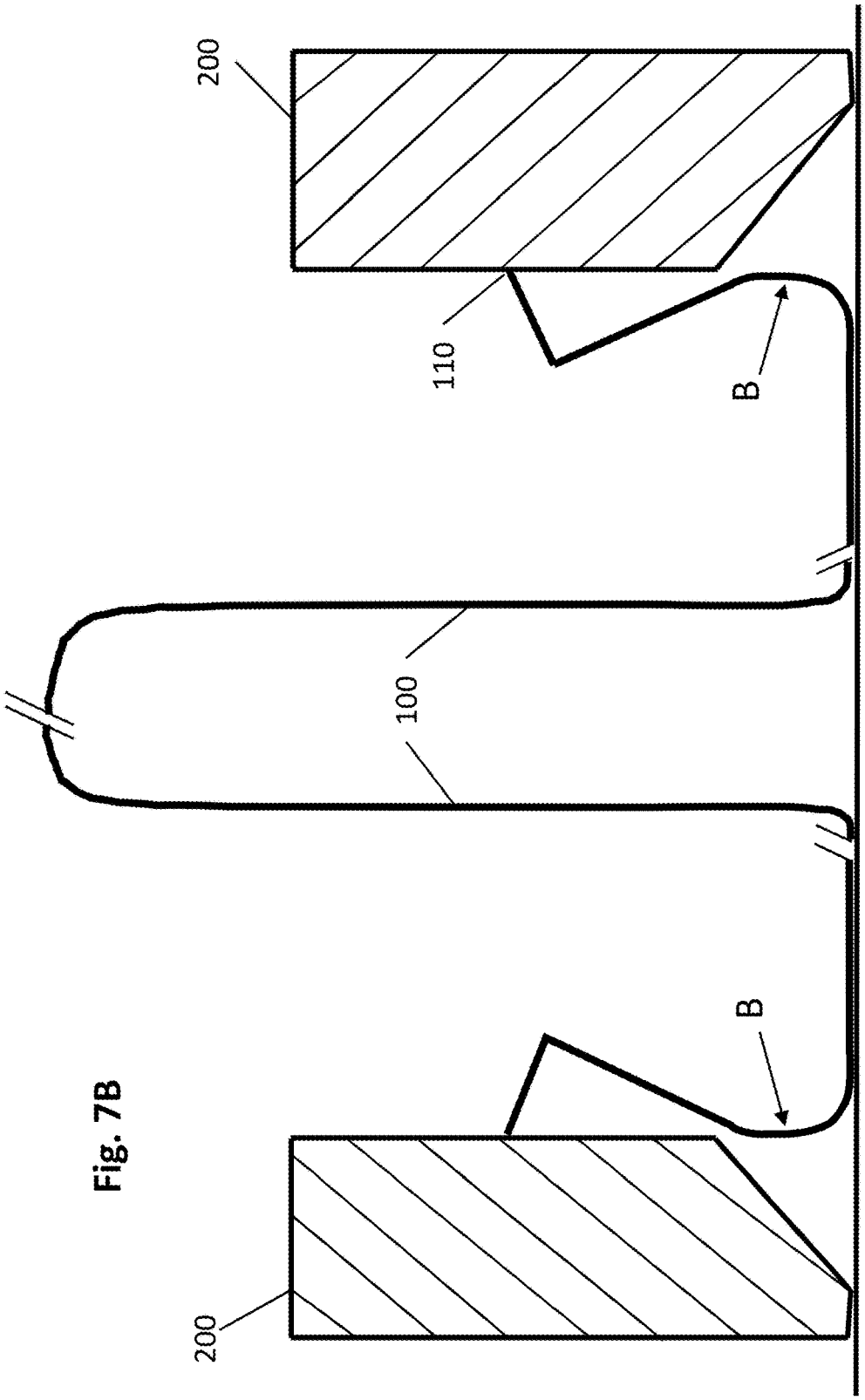

Fig. 7B

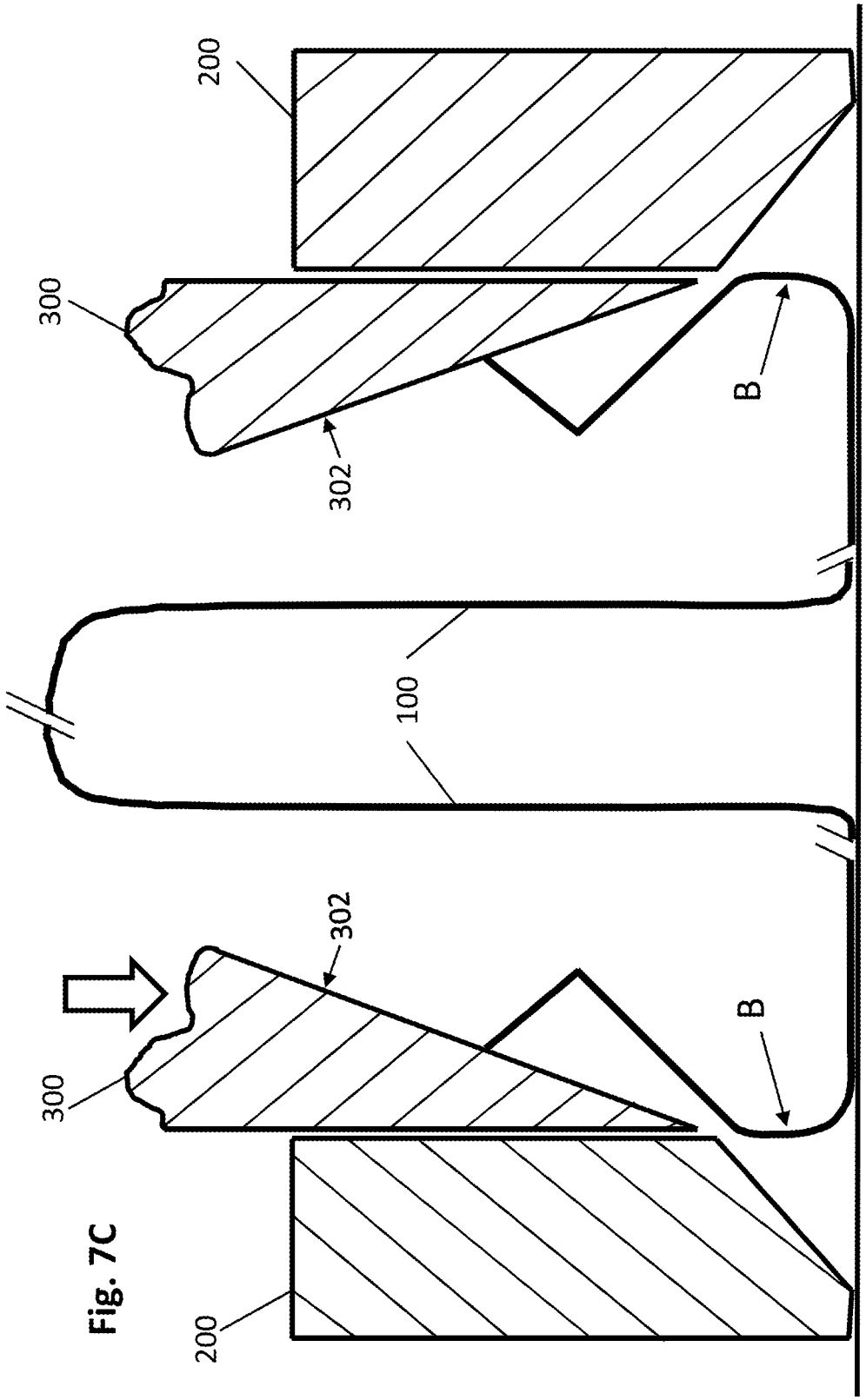

Fig. 7C

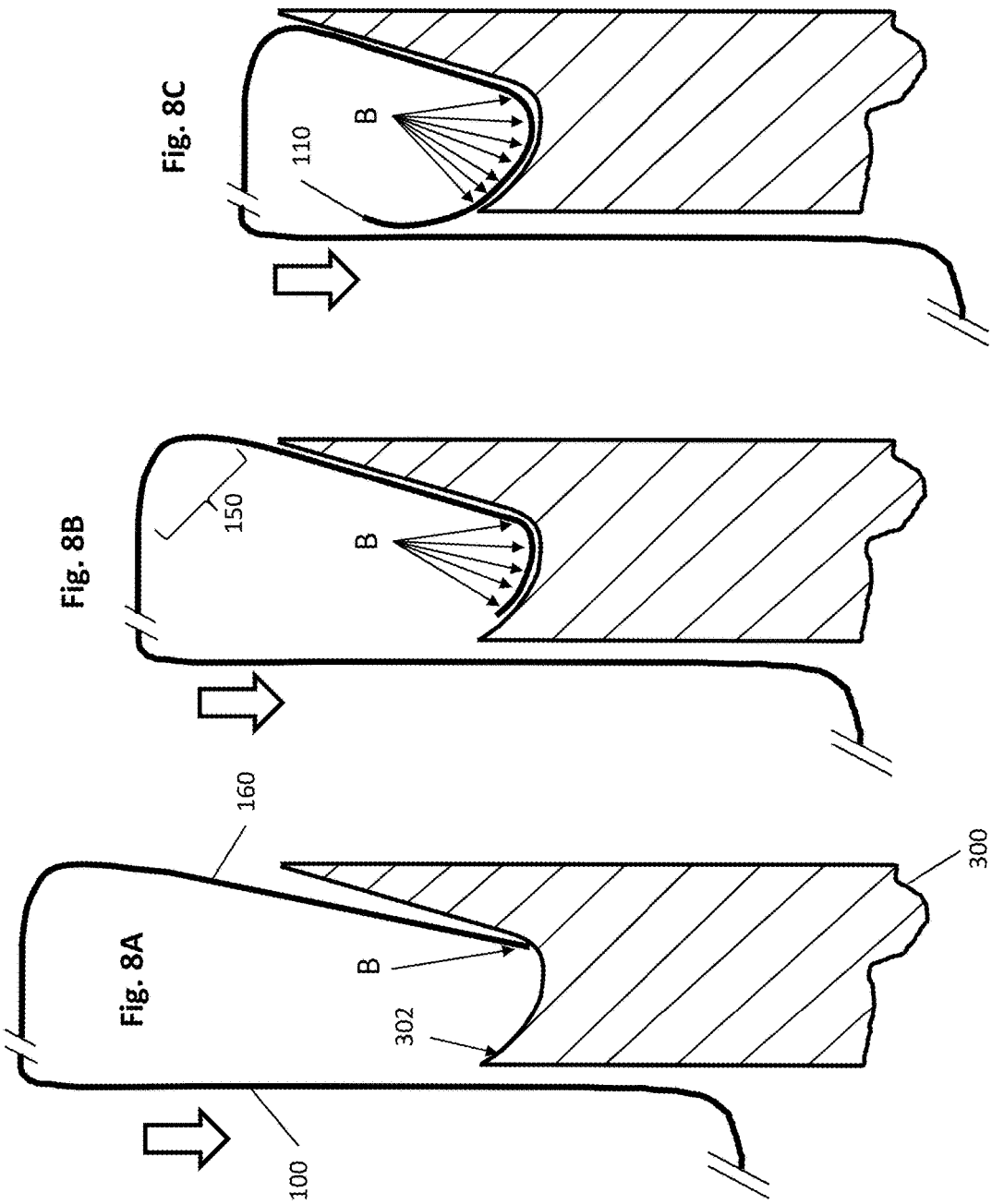
Fig. 8A
Fig. 8B
Fig. 8C
100
160
150
110
B
B
B
302
300

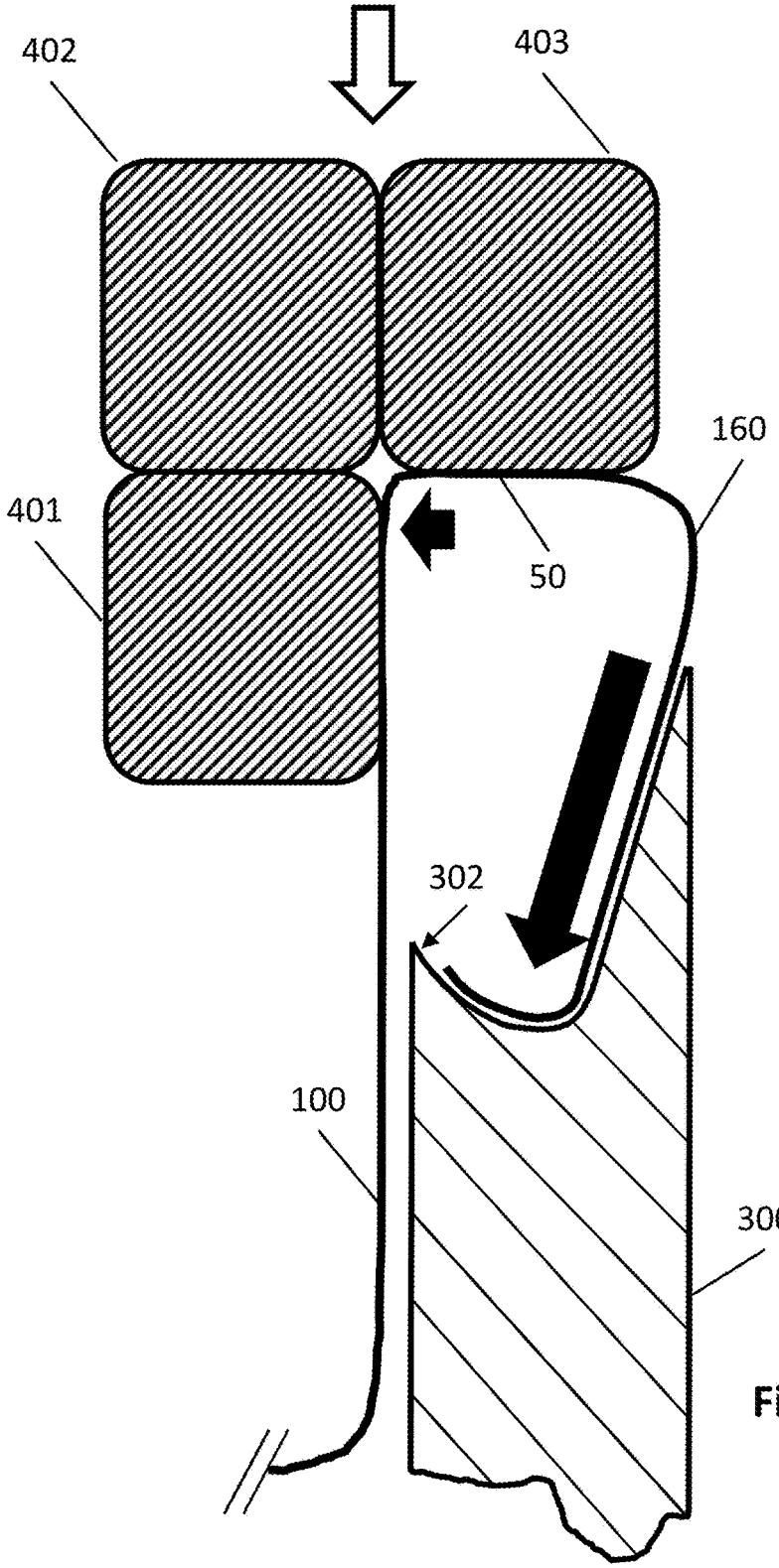

Fig. 8D

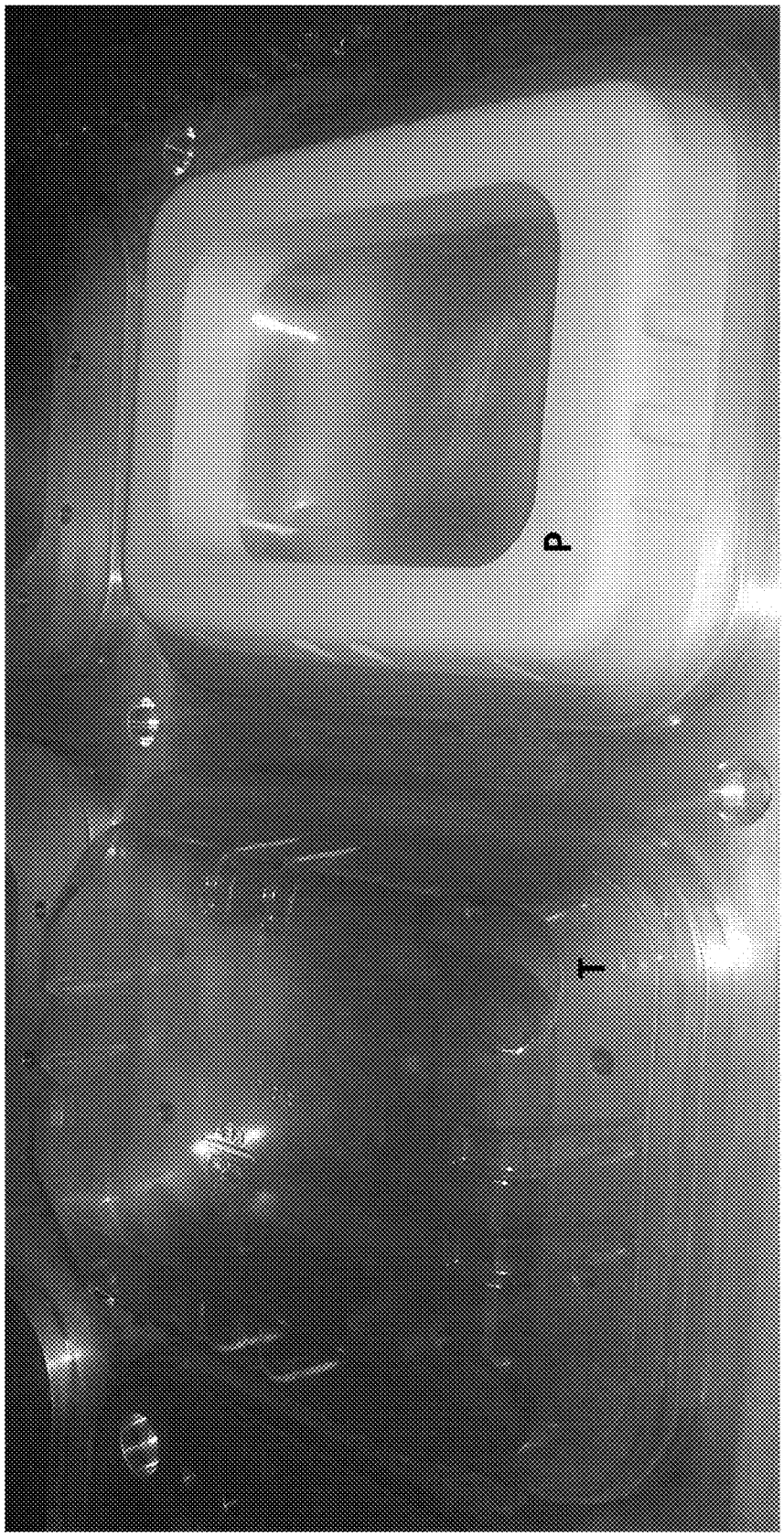

Fig. 8Di

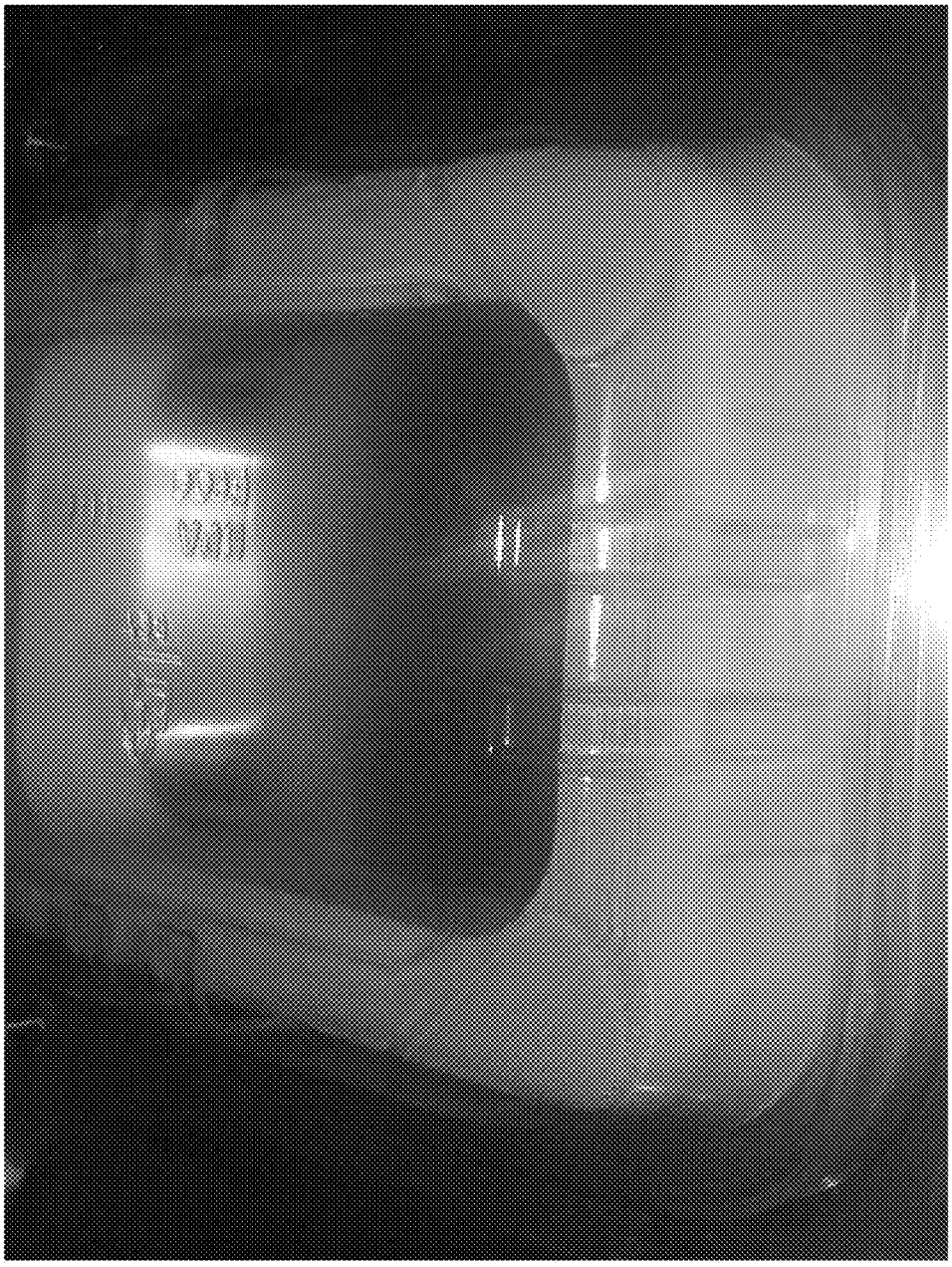

Fig. 8Dii

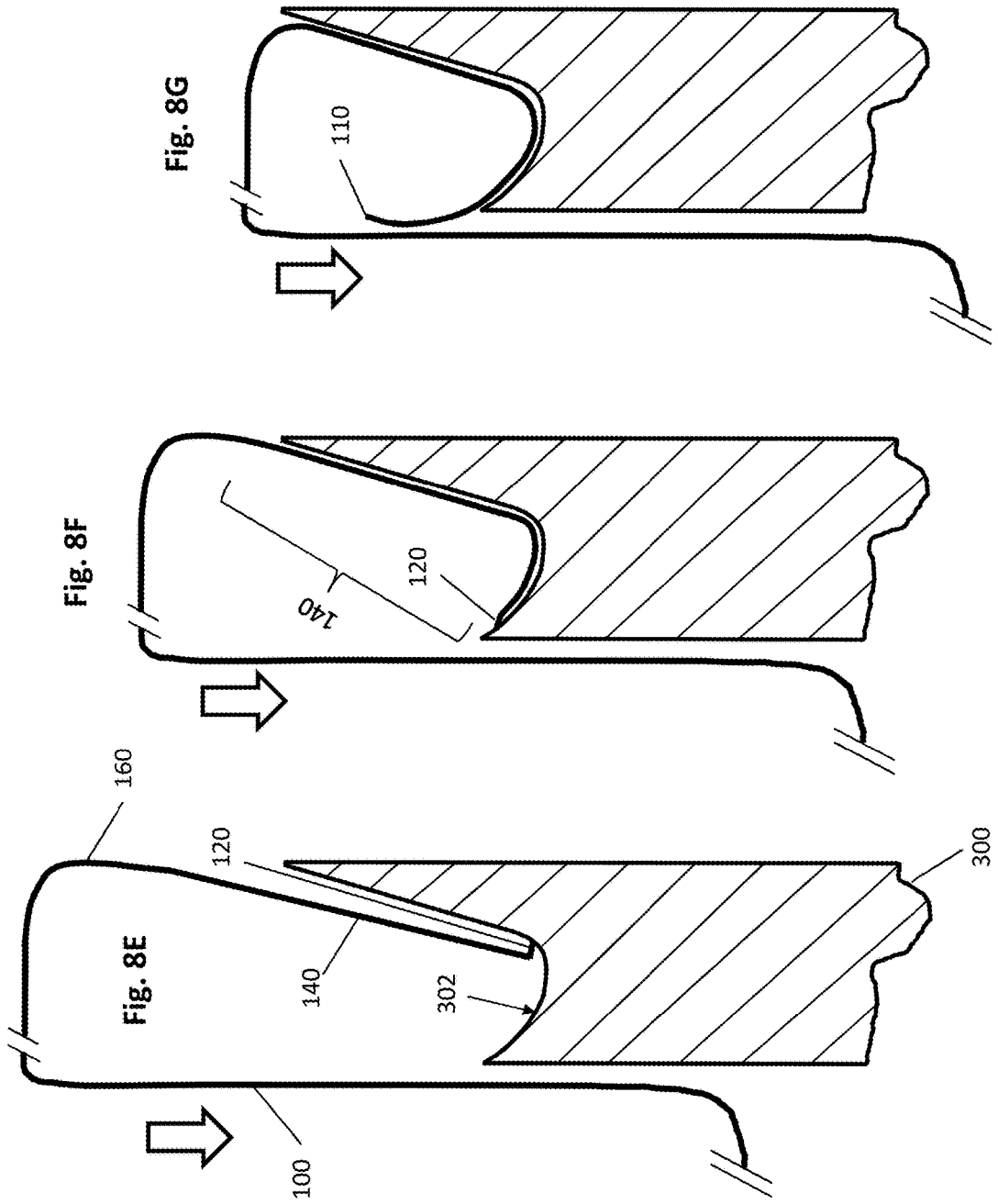
Fig. 8E
160
120
140
302
100
300
Fig. 8F
140
120
Fig. 8G
110

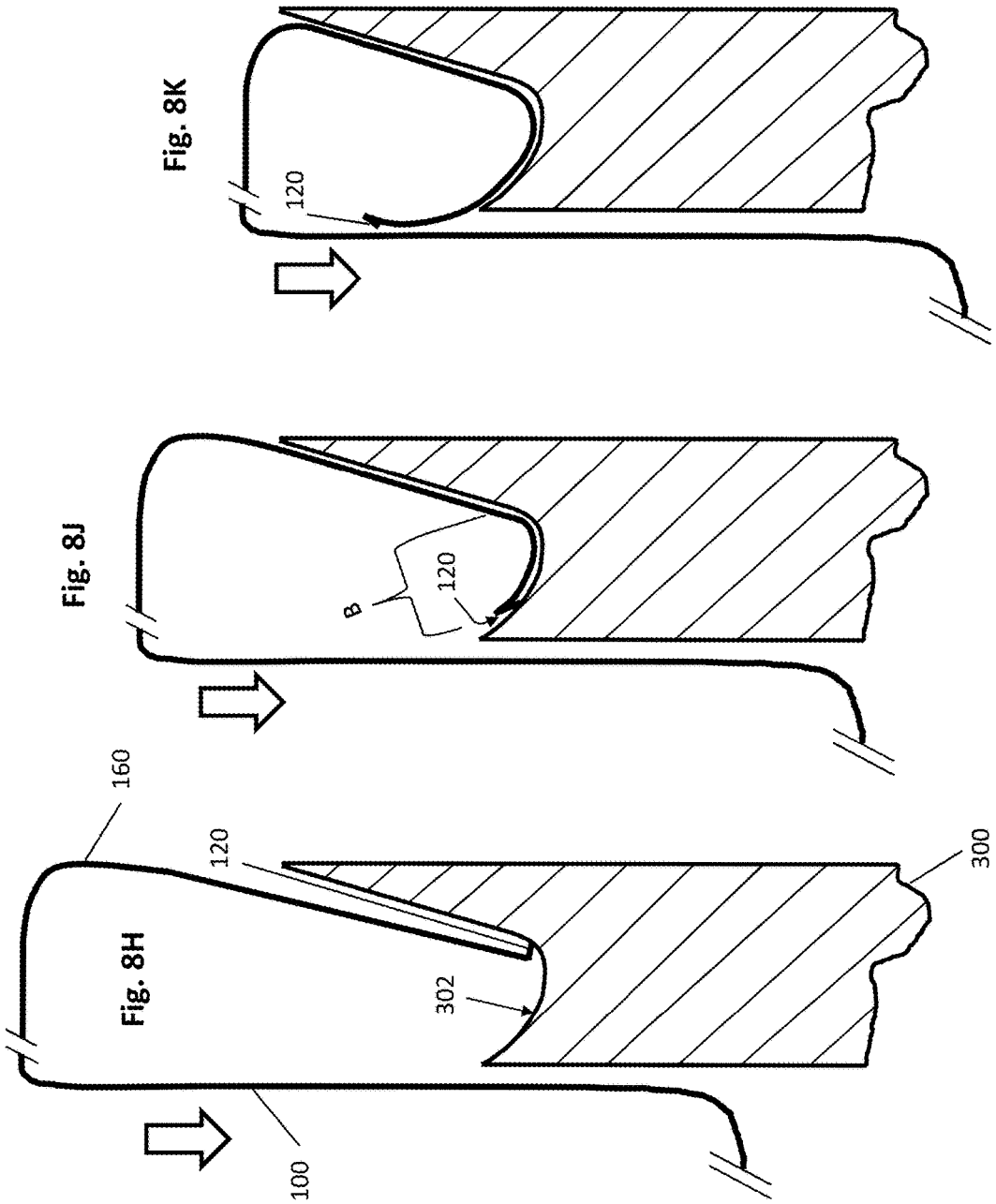
Fig. 8H
160
120
302
100
300
Fig. 8J
B
120
Fig. 8K
120

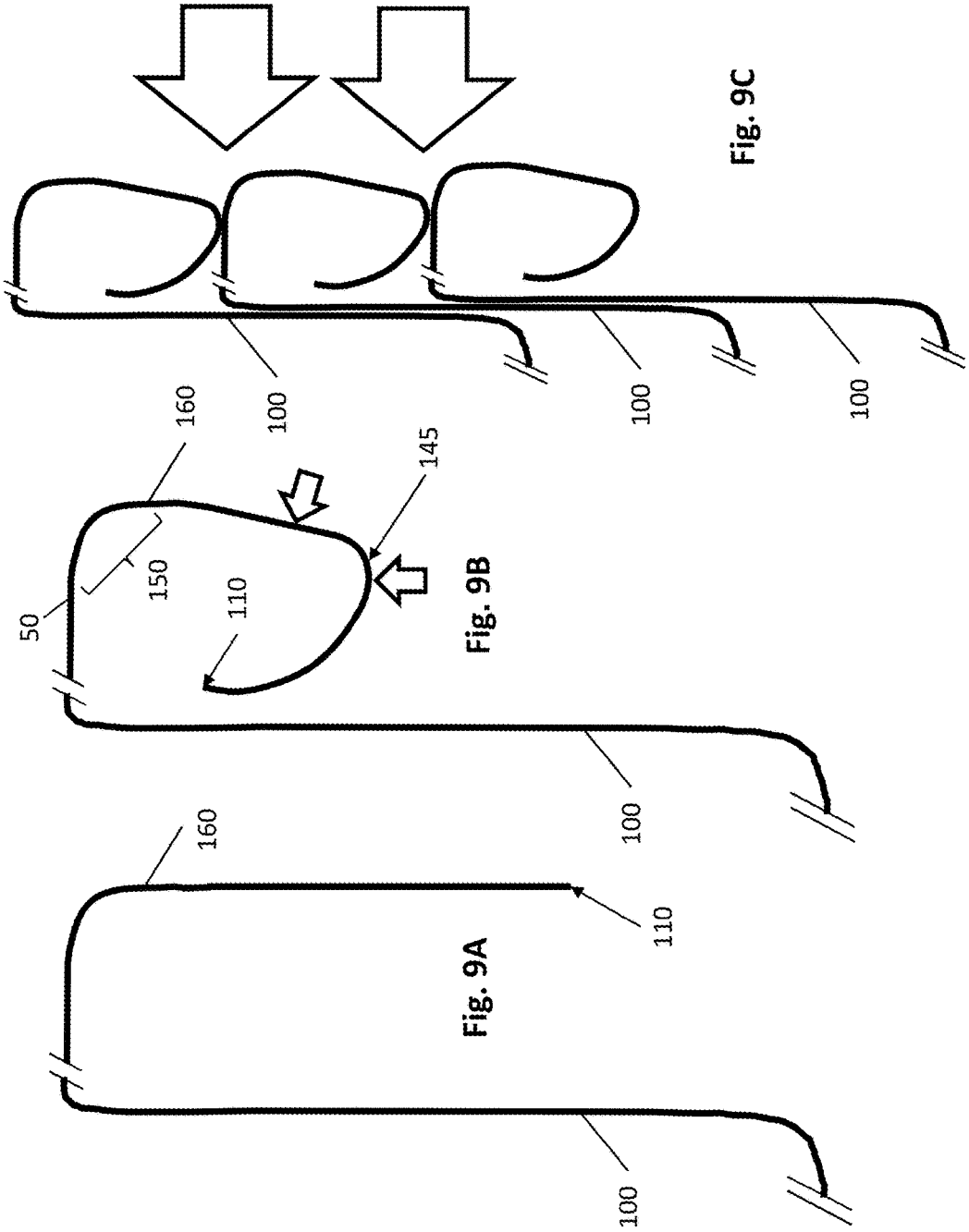

Fig. 9C

Fig. 9B

Fig. 9A

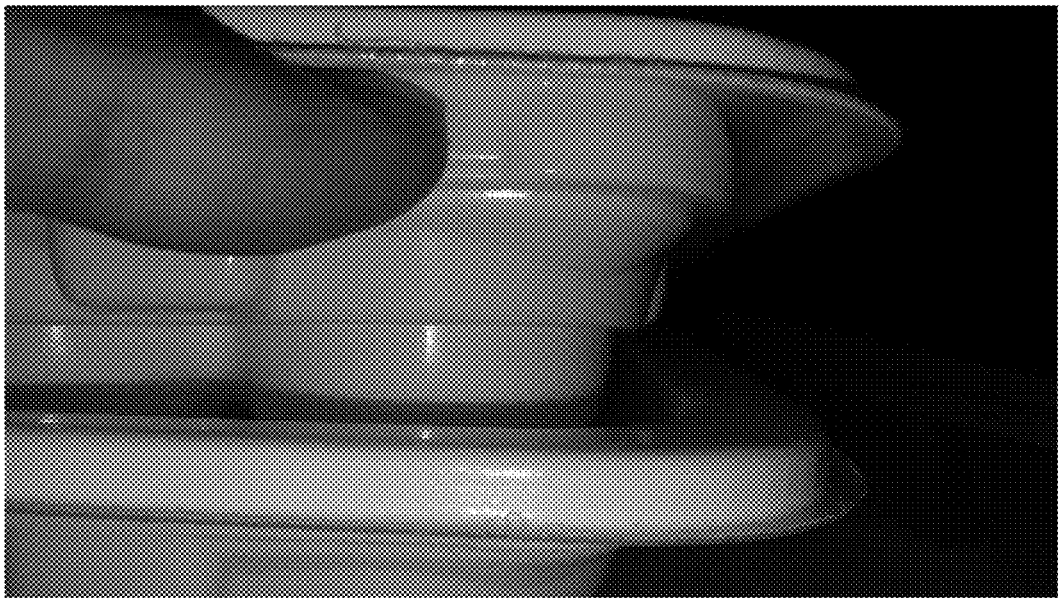

Fig. 9D

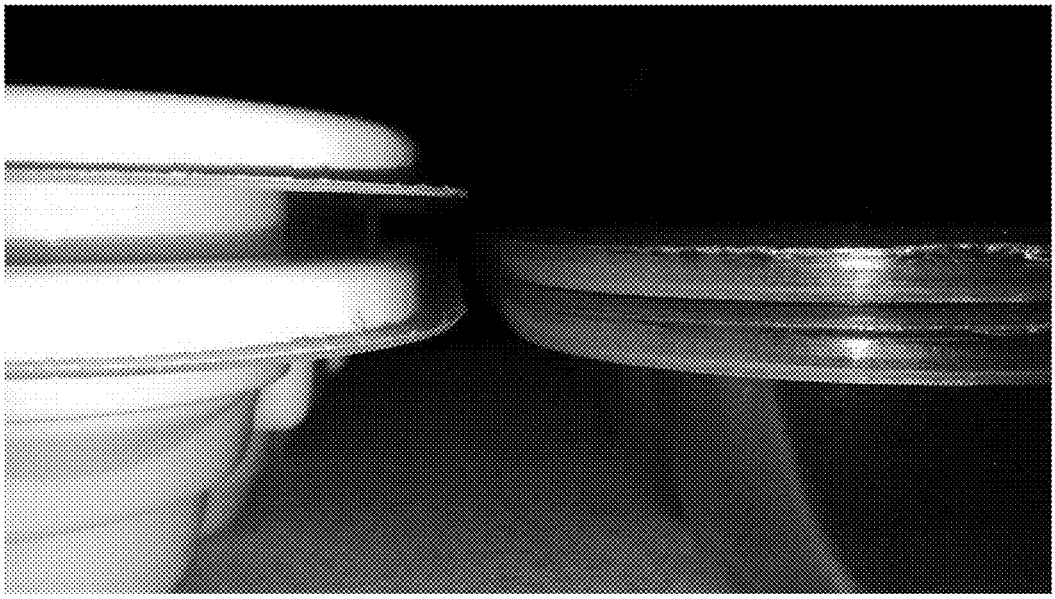

Fig. 9E

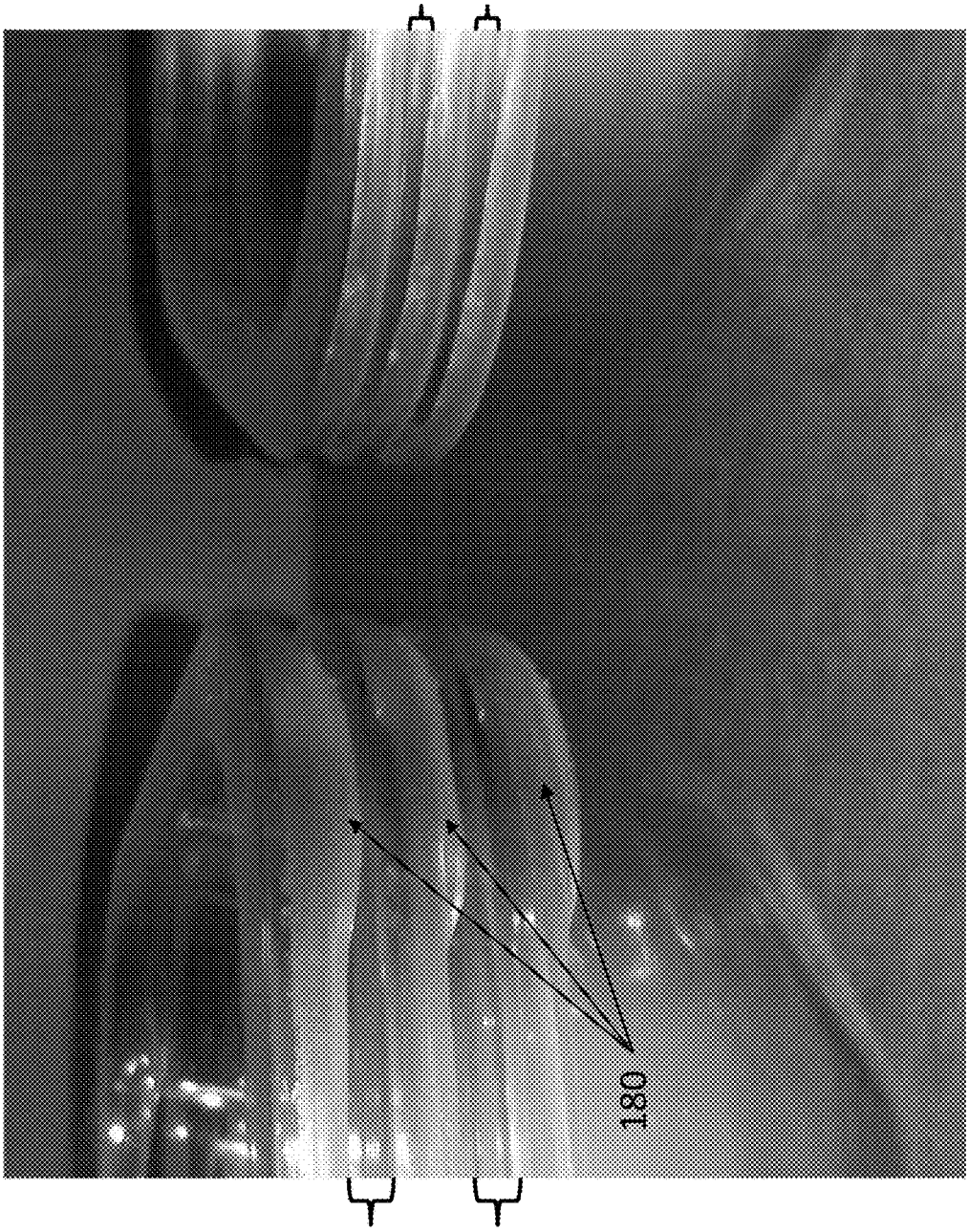

Fig. 9F

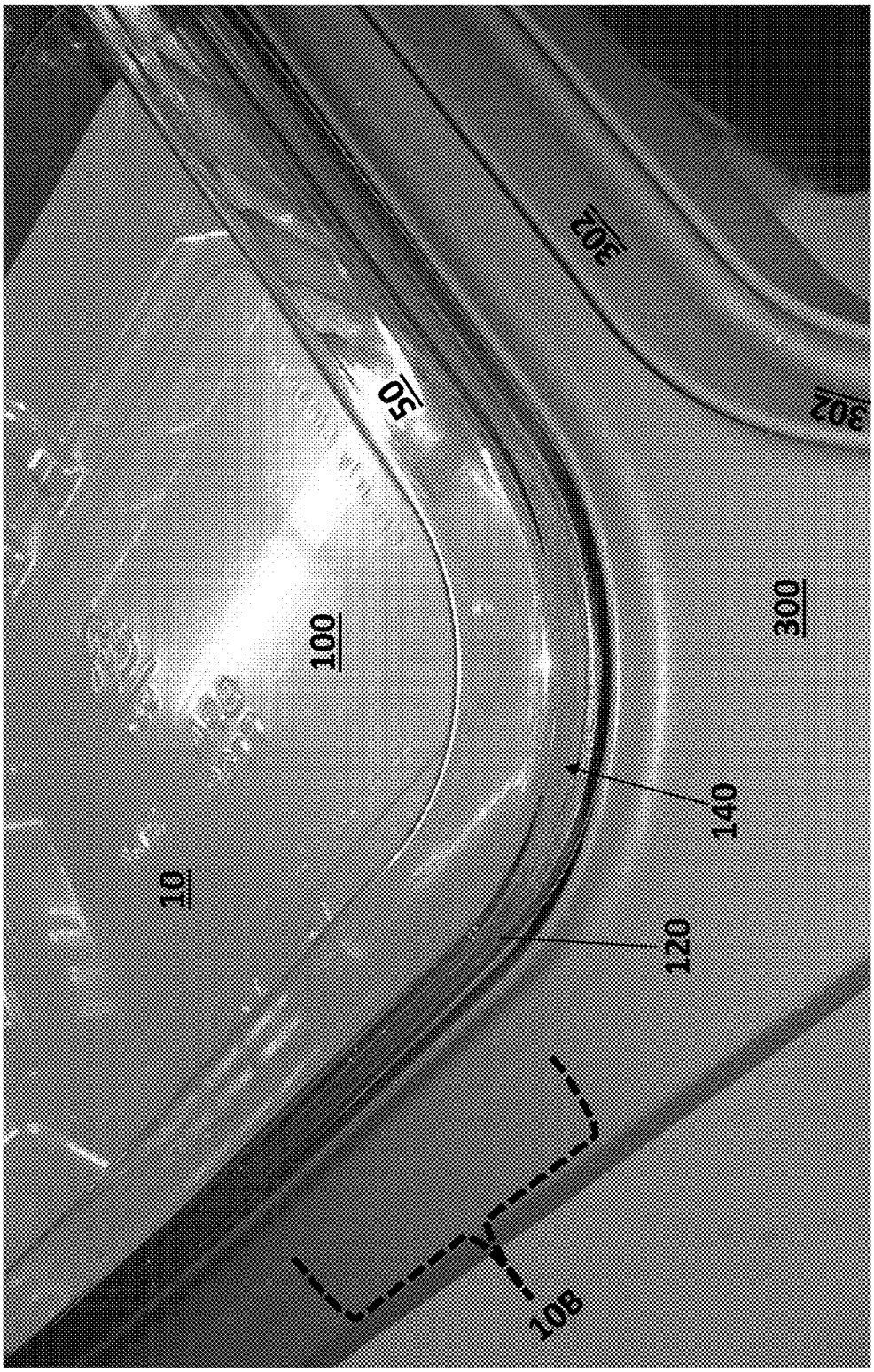

Fig. 10A

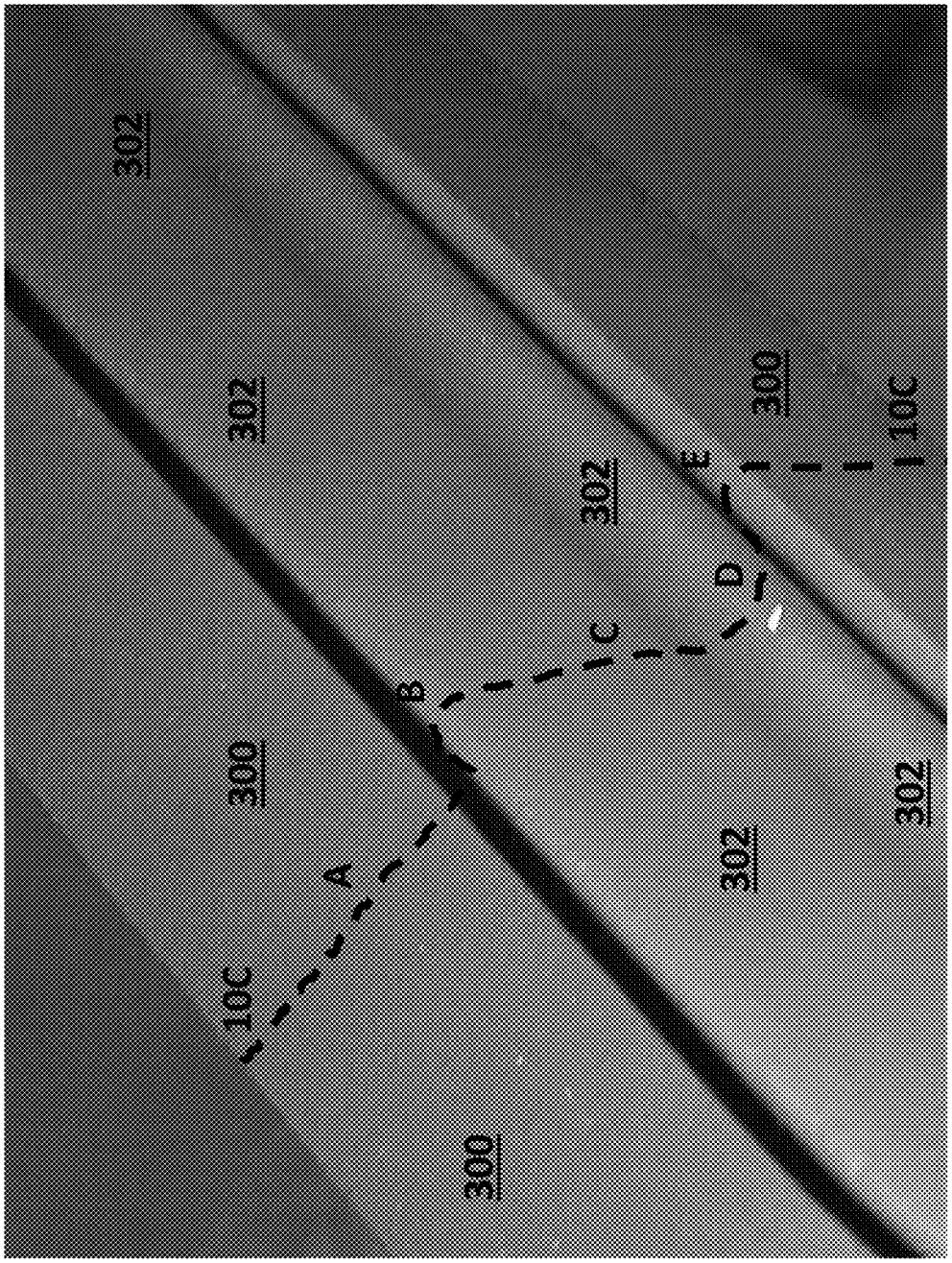

Fig. 10B

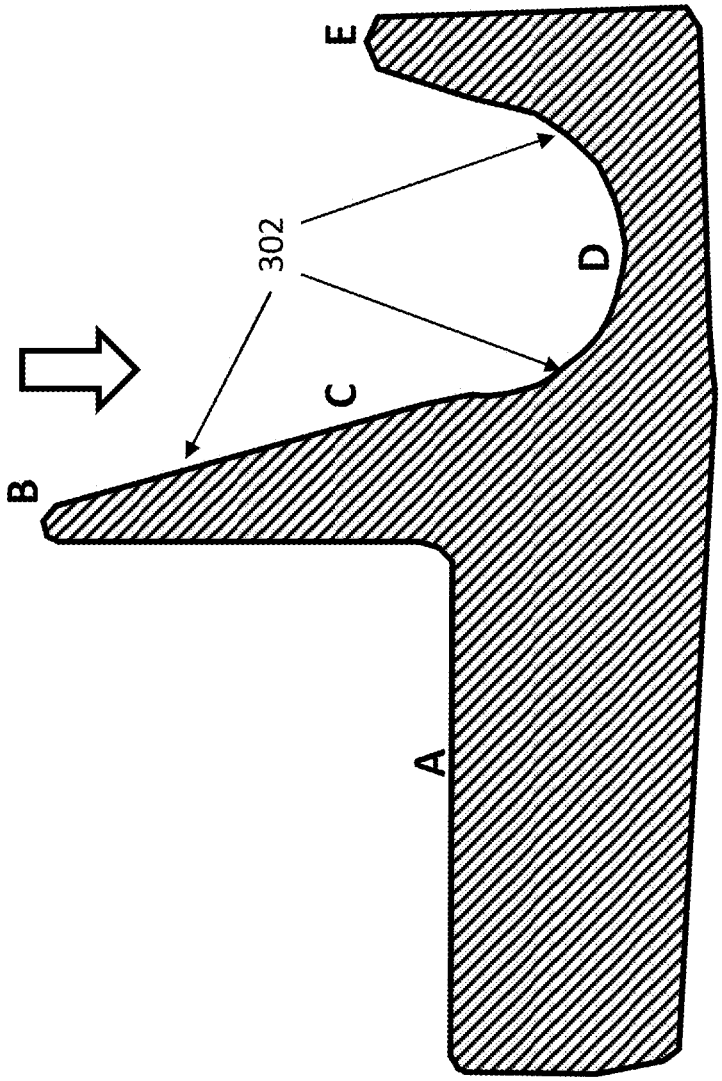

Fig. 10C

FORMED THERMOPLASTIC ARTICLE HAVING SMOOTH EDGES

CROSS-REFERENCES TO RELATED APPLICATIONS

This application is a continuation-in-part of co-pending international application PCT/US16/49692, filed 31 Aug. 2016, which is entitled to priority to U.S. provisional patent application No. 62/212,367, filed 31 Aug. 2015, each of which applications is incorporated herein by reference in its entirety.

BACKGROUND OF THE DISCLOSURE

This disclosure relates generally to the field of forming shaped thermoplastic articles.

Formation of shaped articles from thermoplastic materials is well known. A wide variety of methods (e.g., thermoforming, casting, molding, and spinning) can be used to confer shape to a molten thermoplastic or to a preformed thermoplastic sheet that has been softened or melted.

Trimming of waste material from one or more edges of a shaped article is a common finishing technique, but leaves a sharp edge that can injure flesh or tear or cut materials which come into contact with the edge. One common use for shaped thermoplastics is to form containers that can be sealed with thin plastic films, such as trays, bowls, or bins intended to contain foodstuffs and intended to be sealed with transparent plastic film. Another common use is to contain items and to seal them from moisture or other materials which may come into contact with the container. Sealing of such containers typically involves extending or stretching the film across a compartment formed in the container and sealing the film around the periphery of the compartment, which periphery is often situated adjacent a trimmed edge of the article that includes the compartment. If that edge is sharp, it can cut or break the film, interfering with the sealing process.

Three well-known sealing technologies are commonly used in sealing foods and foodstuffs to form containers for commercial shipping, storage, display, and sale. These are referred to herein as OW, VSP, and MAP technologies. All of these technologies involve combining a container and a thin plastic film. Owing to the fragility of such films and the need, in many instances, to minimize or eliminate punctures and tears from film portions which serve to define (together with the container) sealed compartments, it is critical to minimize the opportunities for containers to tear, puncture, or abrade the film of the same or nearby containers. In addition to plastic films used for sealing such containers, plastic films are also employed for shipping the containers, such as the "mother bags" (i.e., typically thin plastic bags) used for containing multiple product-in-container-packages during shipping and the plastic grocery bags used by consumers to transport purchased goods from a retailer. This can be achieved by reducing or eliminating sharp or rough container edges, at least positions on the container at which such edges might reasonably contact the film during packaging, storage, shipment, or display.

Overwrap (OW) technology involves enveloping or wrapping a shaped article (e.g., a thermoformed tray, sheet, bowl, or multi-compartment container) with a thin (often transparent) plastic film after a foodstuff or other item has been placed on one or more faces of the article and thereafter sealing the film to itself (e.g., by heating overlapping portions of the film). In such OW technology, sharp or rough

edges of the shaped article can cut, abrade, or puncture the film, potentially allowing materials to pass through the film and defeating one or more of its purposes. Heretofore, OW technology has been used primarily together with foamed trays or bins lacking sharp edges. Many municipal recycling schemes exclude or disfavor foamed plastics, and such materials are therefore increasingly disfavored by consumers. It would be desirable if a thermoformable plastic container suitable for use with multiple wrapping technologies, including OW technology, could be made, since thermoformable materials tend to be widely acceptable in recycling programs.

Vacuum-sealed package (VSP) technology involves adhering a thin (again, often transparent) plastic film against a face of a shaped article bearing a foodstuff (for example, or a moisture-sensitive object as an alternate example) on a face of the shaped article. When VSP technology is employed, that item(s) to be packaged are placed on a surface or within a cavity of the shaped article, the film is overlain such that the item(s) are interposed between the shaped article and the film, air (or whatever other gases may be present) is withdrawn from the space between the film and the shaped article (optionally in coordination of application of positive pressure to the exterior of one or both of the film and the shaped article) so that the film is closely opposed against the surface of the shaped article and/or the item(s), and the film is sealed (e.g., by way of an interposed adhesive, through heat-induced adhesion, or by static charge adhesion) to the surface of the shaped article across the desired area (usually completely encircling the item(s)), and any excess film can be trimmed from the desired area. The seal can be resistant to gas flow in order to maintain the gas-evacuated state on the interior of the sealed container. The resulting VSP-sealed package typically has a topology that mimics the shape of the surface of the shaped article having the item(s) thereon.

MAP is an abbreviation for modified atmosphere packaging and refers to a sealing technology in which a flexible (often transparent) film is sealed (e.g., using heat or an adhesive) about the perimeter of a substantially rigid shaped article. When the shaped article is otherwise closed (i.e., when it has no other openings than that sealed by the film), the gases present within the container can be controlled at the time the film is sealed to the article. Thus, if the article and film are sealed in the presence of a selected atmosphere (e.g., a gas, such as one selected to exclude oxygen or to promote fruit ripening), the selected atmosphere can be maintained within the sealed MAP package during subsequent storage, shipping, and display of the package.

As is known in the art, the shaped articles used in OW, VSP, and MAP sealing processes tend to have a variety of industry-accepted geometric shapes and properties which differ among the three types, such that a shaped article useful in one type of sealing process is often poorly suited for use in one or both of the others.

Containers used for OW-sealing, for example, tend to be rectangular and tray- or sheet-shaped, with smooth, blunt edges and rounded corners. The lack of sharp, rough, or pointed edges or corners serves to reduce the likelihood that the film used for overwrapping the container will be torn or punctured upon wrapping. OW-containers often have a flat portion (e.g., on the "bottom" of the container, relative to its intended display configuration) at which the overwrapped film can be urged against itself for the purpose of sealing the film to itself (e.g., upon application of heat to the overlapping film portions sufficient to cause such sealing), thus enclosing the container and any items on or in it.

Containers used for VSP-sealing tend to have a face or surface (sometimes within a concavity) adapted to carry an item to be sealed between the film and the container and adapted to receive the sealing film by virtue of the absence of sharp points, protrusions, or edges. The absence of such features reduces the likelihood of punctures or tears in the film as it is drawn against the surface. Unlike OW-containers, VSP-containers can have sharp edges, corners, or protrusions, at least at portions other than the film-receiving surface, because those portions need not contact the film during sealing. However, such sharp portions can still damage sealing films, especially when multiple VSP-sealed packages are stored, shipped, or displayed near one another, because a sharp portion of one container can damage the film of another container (or a film or tissue in the vicinity of the container).

Containers used for MAP-sealing tend to have a planar surface (e.g., a broad, flat rim) surrounding an opening to be sealed by applying a sheet of film against it, sealing the film to the surface (often substantially irreversibly), and then trimming the film about the perimeter of the seal. Such containers must be configured such that the film can be applied to the surface without substantial risk of tears or punctures before and during sealing and to facilitate trimming of the film from the sealed container. However, because the film typically contacts only limited portions of MAP-containers during the sealing process, MAP-containers can, and often do, include sharp, pointed, or abrasive features at positions not involved in the sealing process.

It would be beneficial if the sharp edges of shaped thermoplastic articles could be displaced in such a way that the risk of injury or damage to sealing films could be reduced. It would be further beneficial if such individual shaped articles could be used with multiple known sealing technologies, such as two or more of OW, VSP, and MAP technologies. Reducing the sharpness and tendency of thermoformed articles to induce damage and injuries would be advantageous even in the absence of sealing. The subject matter disclosed herein addresses this shortcoming of prior shaped thermoplastic articles.

Others have recognized the desirability of reducing the occurrence of sharp edges at the edges of trays to be overwrapped. For example, Nelson et al. (U.S. patent application publication number 2015/0001127) disclosed a packaging tray that is formed by thermoforming a film sheet to yield a precursor tray having a generally U-shaped flange about its periphery, the open end of the U facing the sealing surface and the peripheral edge of the tray jutting peripherally. Nelson's tray is made by cutting the precursor tray from a sheet of thermoformable material to yield an end in which the peripherally-extending peripheral edge is positioned at the terminus of the outer (relative to the tray body) arm of the U. Nelson then compresses that outer arm inwardly toward the tray body, leaving a smoother crimped portion of the U-shaped flange at the periphery of the tray, with the still-potentially-sharp peripheral edge extending toward the sealing surface. In this way, Nelson et al., generates a tray said to be suitable for overwrapping, an overwrapping film being intended to urge the outer arm of the U-shaped flange toward or against the inner arm. However, because the tray retains a sharp peripheral edge in a position in which it can cut films (the peripheral edge of Nelson's trays can be seen to contact both the film overwrap and the film overwrapping an adjacent tray in Nelson's FIG. 13A, for example), Nelson's tray remains unsuitable for all OW applications and generally unsuitable for use with VSP and MAP technologies. A tray lacking a film-accessible sharp peripheral edge or a sharp crimps (which Nelson's trays also possess—see item 124 in Nelson's FIG. 12A) would be preferable for use with each of these sealing technologies.

The subject matter disclosed herein includes shaped thermoformed articles which are suitable for sealing with multiple technologies.

Thermoformed drinking cups having smooth, rolled edges are also known. Such cups are made by thermoforming cups having a flange about the perimeter of the cup opening, the flange including a potentially sharp peripheral edge at the flange end distal to the interior of the cup. The flanged cups are stacked in a nested fashion, heated at their flange portions, and then passed through helical rim-rolling threads to create the rolled edge. Such technology is useful only for rolling the edge surrounding a circular orifice, and is therefore of no practical use in making shaped articles having rolled edges surrounding non-circular openings. Rolled-edge drinking cups are also not designed to facilitate wrapping or sealing with thin plastic films.

BRIEF SUMMARY OF THE DISCLOSURE

The disclosure relates to methods of displacing a sharp edge away from the periphery of an article made from a thermoplastic material, where the sharp edge might otherwise damage surfaces that contact the periphery of the article. The disclosure also relates to articles processed according to those methods and to equipment for performing such processing.

The disclosure relates to a method of forming a smooth edge (i.e., a smooth periphery) on an article made of a thermoplastic material. The method includes a step of forming a deflectable flange at an edge of the body of the article. The deflectable flange includes a peripheral edge of the thermoplastic material at the peripheral end of the deflectable flange, optionally on a peripheral flange that extends peripherally from the deflectable flange. In one embodiment, the peripheral flange is connected by an elbow to a spacer and extends peripherally beyond the spacer by a peripheral flange distance. The peripheral flange distance can be selected to yield a desired degree of deflection when it is impinged against a surface. In one embodiment, the peripheral flange distance is selected to be zero (i.e., the peripheral edge exists where the elbow would otherwise be. The spacer is connected by a bend region to the body, the bend region defining an angle (which can be acute or obtuse, and is preferably approximately a right angle) between the spacer and the body. The deflectable flange is urged within the interior of a cavity defined by an upper body, for example, the distance between the elbow and the interior being smaller than the peripheral flange distance, so that the deflectable flange is deflected at the bend region upon impingement of a portion of the interior of the cavity on the peripheral flange. Sufficient heat is applied to the bent portion (here, the bend region) of the deflectable flange to soften the thermoplastic material at the bend region. The upper body and the article are separated, whereby the bend region remains deflected upon cooling, yielding a smooth edge (i.e., periphery) on the article.

This method can be used to form a smooth edge about the entire periphery of the article. To do so, the deflectable flange is formed about all edges of the article and the interior of the cavity is configured to simultaneously impinge upon the deflectable flange about all edges of the article when the deflectable flange is urged within the interior. In the resulting article, the peripheral edge is effectively 'hidden' (e.g., it is behind the deflected peripheral flange or deflected away

from the periphery of the article) so that materials (e.g., thin plastic films or animal tissue) which contact the periphery of the article will be less likely to contact the peripheral edge of the thermoplastic material from which the article is made.

The disclosure also relates to a method of forming a sealed compartment. This method includes steps thermoforming a thermoplastic sheet to form an article having a concave compartment surrounded by substantially planar sealing surface, cutting the article from the sheet peripherally to the sealing surface, forming a smooth edge about the entire periphery of the article as described herein, and thereafter sealing a top sheet to the sealing surface to form the sealed compartment. In one embodiment of this method, the top sheet is trimmed peripherally about the sealing surface after it is sealed to the sealing surface. In another embodiment, the top sheet is heat-sealed to the sealing surface.

The disclosure further relates to a method of forming a sealed compartment. This method includes steps of thermoforming a thermoplastic sheet to form an article having a concave compartment surrounded by substantially planar sealing surface, cutting the article from the sheet peripherally to the sealing surface, forming a smooth edge about the entire periphery of the article as described above, and thereafter wrapping and sealing a flexible plastic film about the article to form the sealed compartment.

In some embodiments of the methods described herein, after urging the deflectable flange within the interior of the cavity and before separating the upper body and the article, a ram can be urged into the interior, closely opposed against the interior, behind the deflectable flange to an extent that a face of the ram impinges upon and further deflects the deflectable flange, for example, at the bend region. The face can be substantially planar, for example. The face can also be substantially perpendicular to the portion of the interior that impinges upon the peripheral flange. The face can define an obtuse angle with the portion of the interior that impinges upon the peripheral flange. The face can have a concave profile, relative to the interior. If the ram is heated, urging the ram against the deflectable flange can cause bending of the portions of the deflectable flange which contact the ram, further deflecting the peripheral edge of the thermoplastic sheet away from the periphery of the shaped article.

In a non-heat-based embodiment, the disclosure relates to a method of forming a smooth edge on an article made of a plastic material (e.g., a thin plastic material backed by a deformable metal layer). This method includes forming a deflectable flange at an edge of the body, the deflectable flange including a peripheral edge of the thermoplastic material at the peripheral end of a peripheral flange. In one embodiment, the peripheral flange is connected by an elbow to a spacer and extends peripherally beyond the spacer by a peripheral flange distance (which is effectively zero if there is no peripheral flange). The spacer is connected by the bend region to the body or an extension therefrom. The bend region defines an angle (which can be acute or obtuse, and is preferably approximately a right or slightly obtuse angle) between the spacer and the body. The deflectable flange can urged within the interior of a cavity defined by an upper body, the distance between the spacer and the interior being smaller than the peripheral flange distance or impinged upon a shaped ram surface that deflects the deflectable flange inwardly. The deflectable flange is thereby deflected, such as at the bend region, upon impingement. Sufficient pressure is applied to irreversibly bend the plastic material. The upper body and the article are separated, whereby the deflectable flange remains deflected upon removal of pressure, yielding a smooth edge on the article.

BRIEF SUMMARY OF THE SEVERAL VIEWS OF THE DRAWINGS

FIG. **1** consists of FIGS. **1**A, **1**B, and **1**C and illustrates the basic operation of the structures and methods described herein. Parallel straight lines "//" indicate positions at which structures, dimensions, and proportions which can optionally be present are omitted for clarity.

FIG. **1**A illustrates a sectional view of a thermoplastic article **100** having a deflectable flange **160** formed at an edge thereof. The deflectable flange **160** in this embodiment includes an extension **50**, a bend region **150**, a spacer **140**, and a peripheral flange **120**. The extension **50** connects the shaped body **10** of the article **100** to the bend region **150** of the deflectable flange **160**. A spacer **140** can be (and preferably is) interposed between the bend region **150** and the peripheral flange **120**. The peripheral flange **120** is connected to the spacer **140** by way of an elbow **130**, which is shown as a right-angle bend in this embodiment. The bend region **150** connects the extension **50** and the spacer **140** at an approximately right angle (the angle designated A). The peripheral flange **120** terminates at the peripheral edge **110** of the thermoplastic material (represented by a thick solid line in this figure) of which the article **100** is formed.

FIG. **1**B illustrates the thermoplastic article **100** inserted within the interior of an upper body **200**, which is shown as a broken-away portion (indicated by the rough line). In this embodiment, impingement of the peripheral edge **110** of peripheral flange **120** upon the inner surface **202** of the upper body **200** causes the deflectable flange **160** to defect, owing to bending of the deflectable flange **160** at one or more points B within the bend region **150**.

FIG. **1**C illustrates the outcome of inserting ram **300** (only a broken-away portion shown, as indicated by the rough line) into the interior of the upper body **200** behind the thermoplastic article **100** (i.e., when the ram **300** is inserted into the structures illustrated in FIG. **1**B). The ram **300** is closely opposed against the inner surface **202** of the upper body **200** and the peripheral edge **110** of peripheral flange **120** impinges upon the upper face **302** of the ram **300**, causing even greater deflection of the deflectable flange **160** and yielding a rounded periphery to article **100** at the point(s) B at which bending is induced within the bend region **150**.

FIG. **2** consists of FIGS. **2**A, **2**B, **2**C, and **2**D and illustrates a matched upper body **200** and ram **300** for deflecting one or more deflectable flanges **160** formed on the periphery of a shaped thermoplastic article having the conformation of a rectangular tray with rounded corners. FIG. **2**A illustrates the upper body **200** disposed above the ram **300**, and FIG. **2**B illustrates the upper body **200** engaged with the ram **300**. FIG. **2**C is a cutaway view of the engaged upper body **200** and ram **300** shown in FIG. **2**B and illustrates that a portion of the ram **300** fits within and closely opposed to the interior surface of a recess in the upper body **200**. FIG. **2**D is a detail of the section indicated in FIG. **2**C and illustrates the close opposition between the ram **300** and the interior of the upper body **200**. In FIG. **2**D, the sloping conformation of the upper face **302** of the ram **300** is apparent.

FIG. **3** consists of FIGS. **3**A, **3**B, and **3**C, which are images of a smoothed periphery and corner of a clear, shaped thermoplastic article having the conformation of a

rectangular tray with rounded corners. The article was smoothed using an upper body **200** and ram **300** similar to those illustrated in FIG. **2**. In FIG. **3**A, a finger is visible within the interior of the tray, and the smoothed corner is visible to the left of the finger. Also visible at the portion where the finger is located is a stacking lug, which is a portion of the corner of the tray which extends peripherally to a greater extent than the portion of the corner below the finger. Extending (downwardly in the figure) from the smoothed corner is a smoothed straight sidewall of the tray. Wrinkling of the peripheral flange is visible beneath the smoothed corner, and deflection of the peripheral flange under the smoothed straight edge can be seen behind the corner on the left side of the figure. FIG. **3**B is another view of a smoothed corner of a similarly-made tray, also seen from below the rim of the tray. The prominent extension at the corner just below the rim is a stacking lug. FIG. **3**C is a view of the smoothed corner, with a finger pointing to a smooth region formed by bending, softening, bending, and cooling of the bend region of the deflectable flange. This smooth region can, for example, be urged against a thin plastic film without tearing it easily, since the relatively sharp edge of the thermoplastic material from which the tray is formed is bent under the corner, as shown in FIGS. **3**A and **3**B.

FIG. **4** illustrates a section taken through a storage container article **100** being formed using the methods described herein (parallel straight lines "//" indicate positions at which structures, dimensions, and proportions which can optionally be present are omitted for clarity). In the figure, the article **100** has a deflectable flange **160** formed on each of the sides of the container visible in the figure. A single upper body **200** extends across the entire container, including around the sides at which the deflectable flanges **160** are located. A single ram **300** (only two portions shown in the figure) has been inserted within the interior of the cavity in the upper body **200** behind the article **100**. The peripheral edge **110** of the thermoplastic sheet from which article **100** is formed, infringes upon the upper face **302** of the ram **300** at each deflectable flange **160**, causing the deflectable flange **160** to deflect inwardly toward the body of the article **100** by flexing at one or more portions B of the bend region **150** of each deflectable flange **160**. Application of heat at B in an amount sufficient to soften the thermoplastic sheet causes the deflectable flanges **160** to retain approximately the conformation shown in this figure, with the peripheral edges **110** of the thermoplastic sheet positioned anti-peripherally (i.e., within the periphery of the article **100**, which occurs at the positions indicated by B in this figure), yielding smooth peripheries to the formed container upon cooling of the softened portions.

FIG. **5** consists of FIGS. **5**A, **5**B, and **5**C, each of which illustrates a section taken through a storage container article **100** being formed using the methods described herein (parallel straight lines "//" indicate positions at which structures, dimensions, and proportions which can optionally be present are omitted for clarity). In the figure, the article **100** has a deflectable flange **160** formed on each of the sides of the container visible in the figure. The deflectable flanges **160** have been deflected inwardly by infringement thereupon by the upper face **302** of a single ram **300** (only two portions shown in the figure) at each deflectable flange **160**. The peripheral edge **110** of the thermoplastic sheet from which article **100** is formed, infringes upon the upper face **302** of the ram **300** at each deflectable flange **160**, causing the deflectable flange **160** to deflect inwardly toward the body of the article **100** by flexing at one or more portions B of the bend region **150** of each deflectable flange **160**. Application of heat at B in an amount sufficient to soften the thermoplastic sheet causes the deflectable flanges **160** to retain approximately the conformation shown in this figure, with the peripheral edges **110** of the thermoplastic sheet positioned anti-peripherally (i.e., within the periphery of the article **100**, which occurs at the positions indicated by B in this figure), yielding smooth peripheries to the formed container upon cooling of the softened portions. In this embodiment, the two parts of the ram **300** are shown with different profiles (one flat and one curved), to illustrate differences in deflection that can be induced by the different profiles. FIGS. **5**A, **5**B, and **5**C differ in the distance between the elbow and the peripheral edge, this distance being greater in FIG. **5**A than in FIG. **5**B and being zero in FIG. **5**C.

FIGS. **6**A, **6**B, **6**C, **6**D, and **6**E illustrate deflectable flanges formed in tray-shaped articles thermoformed from a sheet of thermoplastic material. In each of FIGS. **6**A and **6**B, a finger touches the sharp edge (i.e., the peripheral edge **110** at the periphery of peripheral flange **120**) where the tray has been cut from the sheet. In these figures, the deflectable flange has not yet been softened, deflected, and cooled, so the sharp edge remains positioned about the periphery of the tray. By comparison, the sharp edge has been deflected inwardly and away from the periphery of the trays shown in FIG. **3** and in the tray shown in the lower portion of FIG. **6**C. The tray shown in the upper portion of FIG. **6**C is the same as that shown in the lower portion, differing in that the tray in the upper portion has not had its deflectable flange "rolled over" as the tray in the lower portion has. FIG. **6**D is a view from the underside of a rounded rectangular tray which has a "rolled over" edge about its entire periphery. The absence of sharp edges at or near the periphery of this tray is visible. FIG. **6**E is an oblique view of three initially-identical trays, each having a "rolled over" edge as described herein, the degree to which the edge has been "rolled over" differing among the three. The tray labeled "1" has a peripheral edge that has only barely been "rolled over" (i.e., the portion of the deflectable flange including the peripheral edge **110** has been deflected not more than about 45 degrees inwardly from the plane of the remainder of the spacer **140**, most which remains substantially flat in this tray. The tray labeled "2" has a peripheral edge that has been more fully "rolled over"—so much so that the peripheral edge **110** can nearly not be seen (it has been 'tucked' behind the remaining visible portion of the spacer **140**). On the tray labeled "3," the deflectable flange has been rolled over further still and the peripheral edge **110** cannot be seen. That the deflectable flange of tray "3" has been rolled over to a greater degree than that of tray "2" is detectable by virtue of the shorter portion of spacer **140** that remains visible on tray "3" than on tray "2" (and the visible portion of spacer **140** of each of trays "2" and "3" is shorter than the visible portion of spacer **140** of tray "1.") The three trays shown in FIG. **6**E can thus be thought to illustrate discrete degrees of "rolling over" of the deflectable flange.

FIG. **7** consists of FIGS. **7**A, **7**B, and **7**C and illustrate an embodiment in which an article **100** formed of a thermoplastic sheet (parallel straight lines "//" indicate positions at which structures, dimensions, and proportions which can optionally be present are omitted for clarity) resting on a horizontal surface (solid horizontal line) has its peripheral edges smoothed as described herein. In this embodiment, an upper body **200** (two portions shown in this cross section) is lowered over the article **100** in the direction indicated by the open arrow, causing each of the article's two deflectable

flanges **160** to deflect inwardly. In FIG. **7**A, outwardly-flared portions of the upper body **200** have just contacted the peripheral flanges **120** of the article **100** as the upper body **200** is lowered onto the article toward the horizontal surface; the deflectable flanges are beginning to deflect at the areas marked "B." In FIG. **7**B, the upper body **200** has been lowered onto the horizontal surface, and the peripheral edges **110** and the peripheral flanges **120** of the article **100** are partially deflected inwardly toward the body **10** of the article **100**. In FIG. **7**C, the ram **300** has been inserted, in the direction indicated by the open arrow, into a cavity in the upper body **200** behind the article **100** and further deflects the peripheral flanges **120** (and, with them, the deflectable flanges **160**) through bending of the thermoplastic sheet of which the article is formed at the areas marked "B."

FIG. **8** consists of FIGS. **8**A, **8**B, **8**C, **8**D, **8**Di, **8**Dii, **8**E, **8**F, **8**G, **8**H, **8**J, and **8**K and illustrates deflection and rolling over of the deflectable flange **160**, including the sharp peripheral edge **110** thereof using a ram **300** as described herein. Each of FIGS. **8**A-**8**C, **8**E-**8**G, and **8**H-**8**K is a cross-sectional view including only one edge of the article; the same deflection and rolling over of the edge can be performed on multiple edges (e.g., all edges) of the article simply by using multiple rams or a ram that contacts all edges to be so treated.

FIGS. **8**A, **8**B, and **8**C sequentially depict the effect of urging the shaped article **100** farther against the ram **300** in the direction indicated by the open arrow in each figure, as can be seen by comparing the portion of the article appearing in the left portion of each figure. In the embodiment shown in FIGS. **8**A-**8**C, the deflectable flange **160** lacks an elbow and a peripheral flange. The initial (pre-ram-impingement) conformation of the shaped article is that shown in FIG. **9**A.

In FIG. **8**A, the article has been urged against the ram such that its deflectable flange **160** contacts the upper face **302** of the ram at its peripheral edge. The deflectable flange **160** deflects from its pre-contact position by virtue of resistance to movement encountered by the deflectable flange as it contacts the inclined portion of the upper face **302**. In the figure, the peripheral edge **110** of the deflectable flange rests against the upper face at a position where the inclined portion of the upper face transitions to a curved contour and a portion of the spacer is in close proximity to the ram, which is heated and transfers heat thereto.

FIG. **8**B shows the effect of urging the article **100** depicted in FIG. **8**A further against the ram **300**. Because the ram **300** shown in FIG. **8**B is heated, it softens the material from which the deflectable flange **160** is made at portions where the deflectable flange is in close proximity to or contacts the upper face **302** of the heated ram **300**. Because of the shape of the upper face **302**, the deflectable flange **160** reaches a position at which it can no longer advance by merely sliding along the upper face surface. Because the article **100** (including the deflectable flange **160**) is being urged in the direction indicated by the open arrow, and because the material of which the deflectable flange is constructed has been softened by the heated ram **300**, the deflectable flange deforms (at positions B) to follow the contour of the upper face **302** of the ram as the deflectable flange is advanced against the ram.

FIG. **8**C shows the effect of continuing to urge the article **100** depicted in FIG. **8**B against the heated ram **300**. As the article (including the deflectable flange **160**) is urged in the direction indicated by the open arrow, the deflectable flange continues to bend where softened by contact with the heated ram (i.e., at positions B). As movement of the deflectable flange against the ram continues, the peripheral edge **110** of the deflectable flange eventually reaches an edge of the upper face **302** of the ram. The portion of the deflectable flange including the peripheral edge remains softened for a period of time (the period being dependent on the operating conditions in predictable ways). If the peripheral end contacts a portion of the article **100** while softened, it can be deflected thereby (e.g., upwardly, as suggested in the embodiment shown in FIG. **8**C). Deflection of the portion of the peripheral flange leaving contact with the upper face can also be influenced by the contour of the upper face **302**, for example inducing a "curled" or "spiraling" conformation as shown in FIG. **8**C.

FIG. **8**D illustrates using one or more objects to assist with deflection and rolling over of the deflectable flange as describe herein. Object **401** (referred to elsewhere herein as a plug) is disposed within an interior compartment of the shaped article **100** and abuts against an inner surface of the shaped article **100** during impingement of the deflectable flange **160** against the ram **300**, in order to reduce or prevent inward deflection of the inner surface during the operation. Object **403** applies downward pressure (open arrow) against, in this embodiment, the extension **50** portion of the deflectable flange **160**, in order to impinge the deflectable flange **160** against the upper surface **302** of the ram **300**. In this embodiment, object **402** rigidly connects objects **401** and **403**. Filled arrows depict forces imposed upon the article **100** upon application of the downward pressure. FIG. **8**Di depicts a shaped article in the form of a rounded rectangular tray T having an interior and a plug P that is shaped and dimensioned to fit within that interior, so as to act as object **401** in FIG. **8**D and to reduce or prevent inward deflection of the side walls of the tray T during the rolling over of the deflectable flange of the tray T. FIG. **8**Dii shows the plug inserted within the interior of the tray.

FIGS. **8**E, **8**F, and **8**G (analogously to FIGS. **8**A, **8**B, and **8**C) sequentially depict the effect of urging the shaped article **100** farther against the ram **300** in the direction indicated by the open arrow in each figure. In the embodiment shown in FIGS. **8**E-**8**G, the deflectable flange **160** includes a peripheral flange **120** at the peripheral end of the spacer **140**. In this figure, it can be seen the peripheral flange **120** deflects during bending of the deflectable flange **160** to the extent that it becomes indistinguishable from the spacer **140**.

FIGS. **8**H, **8**J, and **8**K (analogously to FIGS. **8**A, **8**B, and **8**C; FIG. **8**I is deliberately omitted) sequentially depict the effect of urging the shaped article **100** farther against the ram **300** in the direction indicated by the open arrow in each figure. In the embodiment shown in FIGS. **8**H-**8**K, the deflectable flange **160** includes a peripheral flange **120** at the peripheral end of the spacer **140**. In these figures, it can be seen the peripheral flange **120** deflects during bending of the deflectable flange **160** to the extent that it becomes completely bent over the spacer **140**, forming a 'hook'-like structure. B in FIG. **8**J indicates that bending is occurring in the portion of the deflectable flange **160** spanning the indicated portion of the upper face **302** of the ram **300**.

FIG. **9** consists of FIGS. **9**A, **9**B, **9**C, **9**D, **9**E, and **9**F and illustrates a beneficial feature of one embodiment of the shaped articles disclosed herein.

FIG. **9**A is a cross-sectional view of one edge of an article **100** showing the conformation of its deflectable flange **160** prior to the rolling-over operation described herein, including the property that the potentially sharp or rough peripheral edge **110** is accessible to contact a film used to seal the article or another nearby film or object. FIG. **9**B is a cross-sectional view of one edge of an article **100** have a peripheral edge **110** rolled over by the technique illustrated

in FIGS. **8**A-**8**C. Relative to the article engaged with the ram illustrated in FIG. **8**C, the deflectable flange **160** of the article has 'rebounded' in a peripheral direction following disengagement from the ram. Because the plastic material of which the article is constructed is flexible, the rolled-over edge shown in FIG. **9**B exhibits 'springiness' when urged in directions normal to the plane of the figure, such as in the directions indicated by the open arrows.

FIG. **9**C is a cross sectional view of the edges of three of the articles **100** shown in FIG. **9**B, the articles being stacked in a nested configuration. Because each of the article has the same shapes (e.g., a tray like the one shown in the lower portion of FIG. **6**C), each article can nest and be urged together until with others its rolled-over edge contacts the tray above and/or below it. FIG. **9**C illustrates three thus-stacked nested trays, with open arrows indicating positions at which standard de-nesting equipment can be employed to separate the nested trays. Fingers or threads, for example, can engage the inter-tray regions at these positions, the fingers or threads being operable (per ordinary de-nesting procedures) to separate the trays from one another for individual use.

FIG. **9**D is an image of a prior art thermoformed plastic tray having a stacking lug (the corner extension beneath the rim, toward which the finger in the image is pointing). The stacking lug serves to maintain a controlled separation distance between stacked trays, as shown in the left portion of FIG. **9**E (which is an image of two of these prior art trays stacked against one another, with the inter-tray distance being limited by the stacking lug). The right portion of FIG. **9**E shows two stacked, nested trays having rolled-over edges (as illustrated diagrammatically in FIG. **9**C with three trays). An inter-tray division is visible between the rims of the two stacked trays. FIG. **9**E illustrates that two trays having rolled-over edges as described herein can be stacked in a separable way in a smaller volume than can prior art trays having stacking lugs. FIG. **9**F shows, on its left side, three nested and stacked trays having rolled-over edges and having stacking extensions **180** formed into the corners thereof to increase separation between the straight edges of the stacked trays. The three stacked trays having stacking extensions **180** can be seen to have greater separation (large brackets on left side of figure) than the separation (small brackets on right side of figure) of three otherwise-identical stacked trays lacking stacking extensions.

FIG. **10** consists of FIGS. **10**A, **10**B, and **10**C. FIG. **10**A is an image of a ram **300** having a shaped article **100** in the form of a rimmed, rounded rectangular tray borne thereby. In the lower right portion of the image can be seen the upper surface **302** in which a second article could be disposed, but which does not currently bear an article. In the article **100** borne by the ram **300** in the upper part of the figure, it can be seen that the extension **50** connects the spacer **140** and peripheral flange **120** portions of the deflectable flange to the body **10** of the article **100**. The spacer **140** and peripheral flange **120** are carried by the upper surface of the ram **300** in the upper part of the figure, and that upper surface (analogous to upper surface **302** in the lower right portion of the figure) cannot therefore be seen directly. "**10**B" indicates a portion of the ram **300** shown (with the shaped article **100** removed) in FIG. **10**B. In FIG. **10**B, portions of the upper surface **302** of the ram **300** can be seen. Dashed line **10**C-**10**C in FIG. **10**B indicates the approximate position of the cross-section depicted in FIG. **10**C, and letters A-E are included as landmarks so that the surface configuration of the ram **300** can be better understood by comparing FIGS. **10**B and **10**C. FIG. **10**C is a diagrammatic cross-section of the ram **300** shown in FIG. **10**B, including landmark letters A-E.

DETAILED DESCRIPTION

The subject matter disclosed herein relates to formation of shaped thermoplastic articles, and more specifically to articles which are formed such that one or more of the edges of the article has a conformation wherein the peripheral edge of a thermoplastic sheet from which the article is formed is turned away from a face of the article, and preferably away from the periphery of the article, so that a fragile material (e.g., flesh or a thin, flexible plastic sheet) that is applied against the face or periphery does not contact the edge of the sheet. Because such sheet edges can be sharp, especially when the edge has been cut or broken, directing the edge away from a face and/or periphery of the article can prevent damage to fragile materials which contact the face or periphery. The subject matter disclosed herein is of particular use in forming containers which will be sealed with fragile plastic films applied against a face of the container or in which the container is wrapped. In a preferred embodiment disclosed herein, the peripheral edge of the thermoplastic sheet from which the article is formed is turned away from the article's periphery so far that the resulting article is suitable for use in any or all of OW, VSP, and MAP sealing technologies. Desirably, thermoformable and moldable plastics tend to be widely acceptable in recycling programs, and articles made therefrom can be more readily recycled than, for example, foamed plastic articles.

Briefly summarized, the basic method described herein for forming a shaped thermoplastic article having a smooth edge involves forming a deflectable flange at the periphery of the article. The deflectable flange includes the potentially-sharp or -rough peripheral edge of the thermoplastic material from which the article is formed. The deflectable flange is softened (i.e., raised to a temperature at or above the glass transition temperature of the material of which the flange is formed, and preferably a temperature less than the melting point of the material) at one or more portions thereof so that the peripheral edge is directed away from the periphery of the article when the deflectable flange is deflected toward the body of the article (preferably 'hiding' the peripheral edge between the deflected portion of the deflectable flange and the extension, the body, or both. Cooling (i.e., stiffening) the softened and deflected deflectable flange below its glass transition temperature "locks" the peripheral edge in that position, lessening the likelihood that material (e.g. flesh or film) that contacts the periphery of the article will be damaged by the sharpness or roughness of the peripheral edge.

It is the presence of the deflectable flange formed at the periphery that permits peripheral edges (and, particularly, curved edges and corners of peripheral edges) to be "rolled over" to yield a smooth periphery. In previous trays which included an exterior flange (e.g., a tray having a periphery like that shown in FIG. **1**A, lacking the bend region **150**, the spacer **140**, the elbow **130**, and the peripheral flange **120**, and having the peripheral edge **110** at the periphery of the extension **50**), bending or rolling of the exterior flange might have been possible along straight edges, but bending or rolling curved edges and corners of such exterior flanges could not be performed without buckling or wrinkling of the material in the flange, yielding an undesirable non-smooth edge. It is the presence of the smooth bend region **150** and the spacer **140** of the deflectable flange described herein that

permits the peripheral edge **110** to be deflected away from the periphery of the article without such buckling or wrinkling, yielding a smooth periphery. It can be seen from FIGS. **1**, **4**, **5**, **7**, and **8** that the bending, flexing, and curling that the deflectable flange undergoes can be effected in any one or more of the extension **50**, the bend region **150**, the spacer **140**, the elbow **130**, the peripheral flange **120**, and even at the peripheral edge **110**. Whichever one or ones of these elements are caused to bend or deflect in order to achieve the effect, the resulting disposition of the potentially sharp peripheral edge **110** away from the periphery of the article, and preferably not reasonably accessible from the exterior of the article at its periphery yields an article having a smooth periphery which is suitable for contacting with fragile films, tissues, or other surfaces.

In one embodiment, the deflectable flange includes a peripheral flange that juts outs in a peripheral direction from the article and is attached to a spacer portion by way of an elbow (e.g., a 90-degree turn or a turn through some other offset angle, such as one of 60-120 degrees) in the thermoplastic material that forms the article. The body of the article is attached to the spacer by way of a bend region, which defines an angle (angle A in FIG. **1**A; preferably an approximately right angle) between the spacer and the portion of the body adjacent the bend region (i.e., this portion will usually be the extension which serves to connect the body to the bend region). The deflectable flange is inserted into the interior of a cavity in a body (e.g., an upper body **200** or a ram **300**) such that the peripheral flange is impinged by a wall of cavity, thereby deflecting the deflectable flange in the direction of the body of the article. Upon such deflection, heat is applied to the bend region that is sufficient to soften or melt the thermoplastic material at the bend region, so that the deflectable flange remains deflected toward the body when the bend region cools. Optionally, a ram can be inserted into the cavity after the deflectable flange, and a face of the ram which contacts the deflected peripheral flange can induce further deflection of the deflectable flange, further displacing the peripheral edge of the article away from the periphery of the article upon cooling. In this way, a smooth, "rolled" edge of the thermoplastic material forms the outermost periphery of the article, while the peripheral edge of the thermoplastic material remains within the outermost periphery of the article, where the sharpness of that edge is less likely to damage fragile materials which contact the outermost periphery of the article.

In another embodiment, the deflectable flange is contacted with a ram that deflects the deflectable flange in a direction that deflects the sharp edge of the thermoplastic sheet away from the periphery of the article. Before, during, or after such deflection, one or more portions of the deflectable flange (e.g., the bend region, the spacer, the elbow, the peripheral flange, any portion(s) that contact the ram, or a combination of these) are heated sufficiently to soften the thermoplastic material, and the deflectable flange is thereafter cooled to "lock in" the deflection. Depending on the degree of deflection, the peripheral edge of the thermoplastic material can be simply turned away from the periphery of the article, turned in a direction approximately opposite the periphery, or even "rolled up" by deflecting the deflectable flange at a sufficiently tight radius while it is softened that a J-shaped, U-shaped, or even spiral-shaped conformation is achieved (i.e., any shape yielding a substantially smooth peripheral edge), with the peripheral edge being thereby rendered virtually incapable of damaging flesh or film present at the periphery of the article.

Individual elements and aspects of the shaped articles and methods for making them are now described in greater detail.

The Shaped Article

The methods described herein are believed to be applicable to articles having a wide range of shapes and sizes, especially articles which normally have a sharp peripheral edge when made by common methods. Motivation for making shaped thermoplastic articles with smooth edges stemmed in part from a desire to make common storage trays (e.g., plastic trays used for storing foodstuffs such as fresh or frozen meats, fruits, or vegetables) having edges that are sufficiently dull (non-sharp) that the trays can be wrapped in or contacted with thin plastic films such as polyvinylidene chloride and polyethylene films without the film being cut or punctured by the tray edge under normal usage conditions. However, once the methods described herein were developed, it was recognized that the smooth, rounded edges are desirable in a variety of other situations, such as preventing injury to the flesh of humans handling trays and other shaped articles and preventing damage to films sealing one tray by sharp edges of a second sealed tray (e.g., as in a shipping container containing multiple sealed trays).

By way of example, a common method of making shaped articles such as meat trays is by thermoforming a sheet of a thermoplastic. In thermoforming processes, a portion of a long sheet of a thermoplastic is raised to a temperature at which the thermoplastic softens and can be molded. The softened thermoplastic is applied against the surface of one or more molds (often with the aid of negative air pressure to ensure a tight opposition of the softened thermoplastic film against the mold surface). As the film cools (e.g., upon contact with the mold surface), the thermoplastic hardens and becomes less easily deformable, resulting in the thermoplastic film attaining and retaining the shape imposed upon it by the molding process. Multiple casts are often made of the same article in a single sheet of film in thermoforming processes, and the individual articles are freed from the film by cutting (e.g., die cutting) the film about the periphery of the article. This process tends to yield a sharp edge at the cut portions of the film, including a sharp edge that surrounds all or a portion of the periphery of the article (i.e., where the article was cut from the film).

Further by way of example, a thermoplastic material can be melted in an extruder and injected into a mold cavity which defines the shape of the molded article. After cooling, the mold can be opened to release the molded article. In molding processes, it is common for thermoplastic material to appear at parts of the finished articles where it is not desired, such as "flashing" that occurs when molten thermoplastic flows between mold plates or at the ports through which the molten thermoplastic was fed into the closed mold. These non-desired parts can be sharp in their own right, and sharp edges can be left when these non-desired parts are cut from the molded article.

The size and shape of the articles described herein are not critical. In general, the shaped articles will be ones for which handling of the articles or contact between peripheral edges of the article and one or more fragile materials is anticipated. The edge-smoothing process described herein can remove one or more sharp edges from thermoplastic articles which normally have such sharp edges, regardless of the method(s) by which the articles are produced.

The Smoothing Method

The periphery of a thermoplastic article—particularly one formed from a bent or shaped sheet of a thermoplastic material—can be smoothed by a process that includes form-

ing a deflectable flange near the periphery of the edge to be smoothed, deflecting a bent portion of the flange to displace the edge from the periphery of the article, softening the bent portion at least while the flange is in the deflected position, and re-hardening the bent portion while the flange is in the deflected position. This process is illustrated in FIG. **1**. The portion of the deflectable flange **160** that can be softened and bent can be the bend region **150** or, preferably, a portion of the deflectable flange distal to the bend region **150**, but proximal to the peripheral edge **110**. By way of example, softening the spacer **140** permits its peripheral portion, including the elbow **130**, peripheral flange **120** (if these two elements are present), and peripheral edge **110** to be bent inwardly (i.e., toward the body **10** of the article **100**) sufficiently to displace the peripheral edge **110** away from the periphery of the article.

Preferably, at least a portion of the spacer **140** is softened and bent sufficiently that the peripheral edge **110** is "rolled over," such that the peripheral edge **110** is positioned such that a film that overwraps the article or that is draped across the article does not contact the peripheral edge **110**, even if pulled taut. Still more preferably, the deflectable flange **160** is rolled over sufficiently that the peripheral edge **110** is visually obscured by the spacer **140** or the bend region **150** such that the peripheral edge **110** cannot be seen when the article **100** is viewed horizontally from it periphery (i.e., from its peripheral side). Also preferably, the deflectable flange **160** is rolled over sufficiently that the peripheral edge **110** "points" toward the body **10** or toward the underside of a portion of the deflectable flange **160**, meaning that the plane of the deflectable flange at the portion including its peripheral edge **110** intersects the body **10**, including the underside **161** of the peripheral edge. When the plane of the deflectable flange at its edge including the peripheral edge **110** does not point at the body **10** or the underside **161**, then that peripheral edge should at least be displaced far enough from the periphery of the article **100** or rolled over sufficiently to obscure the peripheral edge **110** by one or more portions of the deflectable flange **160**.

FIG. **1**A illustrates a thermoplastic article **100** having a body **10** (with, in this figure, an irregular shape) and a deflectable flange connected with the body **10**. The deflectable flange includes a peripheral flange **120** which includes a peripheral edge **110** of the thermoplastic sheet from which the article **100** is formed. The deflectable flange also includes a bend region **150** interposed between the body **10** of the article **100** and the peripheral flange **120**. The bend region **150** is separated from the body **10** by an extension **50**, which is simply a flat portion of the thermoplastic sheet in this embodiment. The peripheral flange **120** is similarly separated from the bend region by a flat portion of the thermoplastic sheet designated the spacer **140** in this embodiment. The peripheral flange **120** is connected to the remainder of the deflectable flange by an elbow **130** which, in this embodiment, is a portion of the thermoplastic sheet formed into a right angle.

FIG. **1**A is a cross-section of such an article **100**, in which the solid black line represents the cross-section of the thermoplastic sheet from which it is formed. The peripheral edge **110** forms the periphery of the article **100** because no other portion of the article **100** extends farther to the right (in this figure), the spacer **140** and the other portions of the peripheral flange **120** being nearer to the body **10** than the peripheral edge **110** of the sheet. Thus, if an object were urged against the right side (in FIG. **1**A) of article **100**, the object would tend to contact peripheral edge **110** and the sharpness of that peripheral edge **110** could affect the object, such as by cutting, damaging, or injuring the object.

In FIG. **1**B, the thermoplastic article **100** is inserted within an interior cavity of an upper body **200**. The inner surface **202** of the upper body impinges upon the peripheral flange **120**, deflecting it inwardly (i.e., anti-peripherally) toward the body **10** of the article **100**. In this embodiment, both the peripheral edge **110** of the thermoplastic sheet from which the article **100** is formed and the peripheral-most portion of the bend region **150** are positioned about equally peripherally from the body **10**. Preferably, the deflectable flange **160** is deflected inwardly sufficiently far that the peripheral edge **110** of the thermoplastic sheet is contained within the interior cavity of the upper body **200**. In this embodiment, the spacer **140** is essentially rigid and substantially all bending occurs within the bend region **150**. If heat sufficient to soften the thermoplastic sheet is applied to the bend region **150** (at approximately the location identified as "B" in FIG. **1**B) and the sheet is subsequently cooled (preferably below its glass transition temperature), then the deflectable flange **160** will retain the configuration shown in FIG. **1**B (i.e., deflected relative to its initial conformation shown in FIG. **1**A on account of impingement of the peripheral edge **110** against the inner surface **202** of the upper body **200**) even after upper body **200** is separated from the article **100**. In this deflected conformation, the peripheral edge **110** does not extend peripherally beyond the rounded bend region **150**, and the resulting article will be more suitable for sealing with a thin plastic film applied to extension **50** and bend region **150** than was the original, pre-deformation article shown in FIG. **1**A (i.e., on account of the protuberance of potentially sharp peripheral edge **110** beyond the periphery of bend region **150**, at which position the peripheral edge **110** might readily snag, abrade, or cut the film).

FIG. **1**C illustrates an optional, but preferable step in which a ram **300** is inserted within the cavity in the upper body **200** behind the article **100** (i.e., sandwiching at least the deflectable flange **160** between the upper body **200** and the ram **300**). This step further deflects (relative to the embodiment show in FIG. **1**B) the deflectable flange **160** towards the body **10** of the article **100**, thereby displacing the (potentially sharp) peripheral edge **110** of the thermoplastic sheet further from the periphery of the article (i.e., farther from inner surface **202** of the upper body **200**). Heating the bend region **150** of the deflectable flange **160** sufficiently to at least soften it while it is in the conformation shown in FIG. **1**C and subsequently cooling it below its glass transition temperature will 'freeze' the deflectable flange in the conformation shown. In this conformation, the sharp peripheral edge **110** of the sheet from which the article is formed is 'tucked' under other portions (e.g., the bend region **150** and the extension **50**, if present) of the deflectable flange **160**, and is consequently less accessible to objects contacting the periphery of the article (and less liable to tear, cut, or injure materials which contact the periphery of the article). For example, if a thin plastic film is applied to extension **50** and bend region **150**, then the film is even less likely to be snagged, abraded, or cut by the potentially sharp peripheral edge **110** in this embodiment than it was in the embodiment shown in FIG. **1**B. From this progression (i.e., greater deflection in FIG. **1**C than in FIG. **1**B and FIG. **1**A), it can be seen that the more the peripheral edge **110** is deflected away from the periphery of portions of the article to which a sealing film is applied, the less likely damage to the film from the edge becomes.

The ram **300** and the upper body **200** each serve the purpose of deflecting the deflectable flange by impacting

upon or against it. These two items are therefore essentially interchangeable and can each be used alone or in combinations two or more ram(s) and upper body(ies). In this disclosure, the term "ram" is used to refer to a body that impinges upon the deflectable flange by being applied thereto or thereagainst in a direction from the portion of the deflectable flange most distal from the body of the shaped article. Similarly, the term "upper body" is used to refer to a body that impinges upon the deflectable flange by being applied thereto or thereagainst in about the opposite direction (see, e.g., FIGS. **1**C and **4**).

In the example shown in FIG. **1**C, the portions of the ram **300** which impinge upon the peripheral flange **120** of the deflectable flange **160** while the article is lodged within the cavity in the upper body **200** has a wedge-shaped cross section. Such a ram can be useful for directing the peripheral flange **120** and peripheral edge **110** anti-peripherally, in that the farther the ram is advanced within the interior in the direction from the peripheral edge **110** toward the bend region **150**, the farther the peripheral flange **120** and peripheral edge **110** will be deflected in an anti-peripherally direction. However, these portions of the ram **300** need not be wedge-shaped. Substantially any shape of ram **300** that will deflect the peripheral flange **120** and peripheral edge **110** anti-peripherally when the ram **300** is inserted behind the article **100** in the upper body **200** can be used, such as blunt or rounded (convex or concave at its upper face **302**), or a combination of any of these, can be used, for example as shown in FIG. **5**.

FIG. **8** illustrates an alternate method of rolling or otherwise shaping the edge of an article. As can be seen in FIG. **8**A, the deflectable flange **160** in this embodiment lacks an elbow or peripheral flange, and instead includes only a spacer portion that terminates at the peripheral edge **110** of the thermoplastic sheet. This deflectable flange is urged (in the direction indicated by the open arrows in FIG. **8**, regardless of how such urging is achieved, such as by moving either or both of the article **100** or the ram **300**) against the upper surface **302** of a heated ram. When the direction of travel of the deflectable flange closely parallels the conformation of the upper surface (i.e., as in FIG. **8**A), relatively little of the deflectable flange may contact the upper surface and relatively little heat may be transferred from the ram to the deflectable flange. However, as shown in FIG. **8**B, when relative movement of the article and the ram cause greater surface contact or greater proximity between the upper surface of the ram and the deflectable flange, the interfacial area of contact/proximity can be greater, resulting in greater heat flow from the ram to the deflectable flange. Sufficient heat flow will result in softening of the thermoformable material, causing the deflectable flange to assume the conformation of the upper surface. When, as shown in FIG. **8**C, still further relative movement of the article and the ram is made, a greater portion of the deflectable flange will be softened and deflected. As with the embodiment shown in FIG. **1**B, it can be seen in this embodiment that heat suitable for bending the deflectable flange is being applied (at multiple locations B in FIGS. **8**B and **8**C); however, in order to "roll over" the portion of the deflectable flange that includes the peripheral edge, little or no flexion, and no heat application, is occurring at the bend region **150** (other than perhaps to a small degree as the peripheral-most portions of the bend region **150** approach the heated ram **300**, as in FIG. **8**C). For the purposes of the processes described herein, it is substantially immaterial which portions of the deflectable flange are softened and bent, so long as the desired result is obtained: the potentially sharp peripheral edge **110** is deflected away from the periphery of the article and, preferably, sequestered (as in FIG. **8**C) where it is very unlikely to contact any easily-damaged film or tissue which contacts the periphery of the shaped article. The deflectable flange can be contacted with, or brought into close proximity with, the ram in a single smooth motion, in a plurality of discrete, incremental advances, or a combination of these, in order to permit portions of the deflectable flange to soften sequentially.

As the thermoformable material moves out of contact with the ram (either by disengaging the two or, as shown in FIG. **8**C as a portion of the deflectable flange moves beyond the upper surface of the ram), the thermoformable material can cool and the deflection induced therein will be retained upon cooling. As shown in FIG. **9**A, disengagement of the article and the ram results in a rolled-over edge of the article, the rolled-over edge having a smooth periphery and being suitable for handling and/or contact with fragile plastic films.

In FIG. **8**A-**8**C, the deflectable flange was depicted lacking the elbow **130** and peripheral flange **120** illustrated in FIG. **1**A for the sake of simplicity of illustration. Although production of deflectable flanges lacking the elbow and peripheral flange is possible (e.g., by mechanically or laser-cutting the deflectable flange at the spacer **140** shown in FIG. **1**), such production can be difficult and costly and is therefore of limited practicality in large-scale production operations. For this reason, shaped articles **100**, such as those intended for use as packaging trays for food, that are processed described herein will often have both the elbow and peripheral flange illustrated in FIG. **1**A. As illustrated in FIGS. **8**E-**8**K, shaped articles bearing the elbow and peripheral flange can nonetheless be processed using the methods and equipment described herein.

FIGS. **8**E-**8**G depict processing of a shaped article **100** that has a deflectable flange **160** that includes both the peripheral flange **120** and the elbow **130** described herein, and the processing depicted in these figures is roughly analogous to that depicted in FIGS. **8**A-**8**C. In FIG. **8**E, the peripheral edge of the deflectable flange **120** directly contacts the upper surface **302** of the ram **300**. Because the ram is heated, heat is conducted directly to the peripheral edge where it contacts the ram and by radiation from closely-opposed portions of the spacer **140**. By controlling heat flowing from the ram and the residence time of the article **100** in the position shown in FIG. **8**E, an operator can induce softening of portions of the deflectable flange, particularly including at its peripheral edge and at portions of the spacer near that peripheral edge. Softening of these portions facilitates bending of the deflectable flange at the softened portions, such as by urging the article further against the ram, such that a curved portion of the upper surface will induce bending as the more-peripheral portions of the deflectable flange are driven against the curved portion of the upper surface by the less-peripheral portions (which transmit force applied to the article), as shown in FIG. **8**F. Further urging of the article against the ram, as shown in FIG. **8**G, causes the portions of the deflectable flange that are in contact with the upper surface of the ram to slide across that upper surface. As material is driven beyond positions in which it is in contact with the upper surface, it may remain softened (and susceptible to further bending) for a short period of time, or it may cool and become only deflectable (rather than bendable or moldable). Whether cooled by movement past the heated portion(s) of the ram or by removing the article from contact with the ram (or even by applied cooling, such as by directing cool air at shaped

portions, by using a cooled plug element within the body of the article, or otherwise), cooling of the deflectable flange below its glass transition temperature "sets" or "locks in" the conformation of the material at the time of that transition. Thus, by shaping the deflectable flange so that it has the conformation shown in FIG. **8**G and cooling it below its glass transition temperature, the edge of the article can be rendered smooth (both because its bend region **150** is smooth and because its spacer **140**, including its peripheral edge **110** have been changed to have a conformation in which no rough or sharp edges are present at the periphery of the article.

As shown in FIG. **8**F, the peripheral flange **120** can be partially deflected during shaping of the deflectable flange; in the finished article, the peripheral edge preferably "points" toward the body or the underside of the deflectable flange. As shown in FIG. **8**G, shaping of the deflectable flange will sometimes result in disappearance of the peripheral flange and the elbow interposed between it and the remainder of the spacer. This can occur because the material in the peripheral flange "melts" into the spacer or simply because the offset angle of the elbow becomes approximately 180 degrees. As can be seen in FIG. **8**J, for example, though, the peripheral flange **120** can deflect in a direction that it remains distinct from the remainder of the spacer, potentially forming a hook-like structure. Because such a structure could position the potentially-sharp or -rough peripheral edge at or near the periphery of the article, it is preferable that the deflectable flange be deflected sufficiently that any such hook-like structure is contained within (relative to the periphery of the article) the rolled-over edge, as illustrated in FIG. **8**K.

In the methods illustrated in FIGS. **1** and **8**, impingement of the upper body **200**, the ram **300**, or both upon the deflectable flange **160** can induce inward flexing of the walls of the shaped article. By way of example, the compression induced in the deflectable flange upon impingement upon the flange of the sidewalls of the upper body (compare the positions of spacer **140** in FIGS. **1**A and **1**B) will induce inward (i.e., away from the sidewalls of the upper body and toward the shaped body **10** of the article **100**) force on extension **50**, which force will be transmitted to the shaped body, potentially causing a portion of the body to buckle or deflect. Similarly, impingement of the ram upon the peripheral flange portion **120** of the deflectable flange will also induce inward force on the extension and thereby upon the shaped body. Further by way of example, inward force exerted upon deflectable flanges in embodiments shown in FIGS. **7** and **8** can also be transmitted to the shaped body of the article. Transmission of force from the deflectable flange to the shaped body can be undesirable for at least two reasons. First, deflection of the shaped body can alter the orientation of the deflectable flange and the portions that are bent as described herein, making control of the final shape of the article (and its edge) difficult. Second, force that is transferred from the deflectable flange to the body will generally not drive the deflectable flange against the ram and/or upper body, meaning that the force will not cause the bending and deflection of the deflectable flange described herein, at least to the intended degree. It is therefore desirable to limit transmission of force from the deflectable flange, deflection of the shaped body by such forces, or both, so as to direct the force into deflection of the deflectable flange.

Substantially any equipment or method for preventing or reducing transmission of force from the deflectable flange to the body, reducing or preventing deflection of the shaped body, or both can be employed. Shown in FIG. **8**D is an example of such equipment and how it is used. FIG. **8**D illustrates shaping of the deflectable flange **160** in a shaped article **100** by application of downward force (open arrow), as shown in FIG. **8**B. In contrast with FIG. **8**B, the shaped article shown in FIG. **8**D is coupled with three objects, **401**, **402**, and **403**. Shown here in cross-section, each of the three objects is a solid having a rounded square profile (e.g., rounded metal bars). Object **401** is abutted against a portion of the shaped article **100** upon which inward force (smaller, horizontal solid arrow) is applied when the downward force causes the deflectable flange **160** to impinge upon the upper surface **302** of the ram **300**. Object **403** abuts the extension **50** of the deflectable flange and transmits the downward force to the deflectable flange. Object **402** connects (rigidly, in this example, but not necessarily) objects **401** and **402**. One or more of the three objects can be cooled, to prevent heat (e.g., from heated ram **300**) from softening the plastic at its body or extension.

In FIG. **8**D, when downward force (open arrow) is applied to the object **403**, the force is transmitted to the deflectable flange. Impingement of the deflectable flange upon the ram **300** opposes the downward force. This force could, in the absence of object **401** be transmitted through the deflectable flange (i.e., through extension **50**) to the shaped body of the article **100**. However, because object **401** is present and held in place sufficiently to prevent deflection of the portion of the article it abuts, downward force applied to the deflectable flange cannot be dissipated by deflection of the shaped body (i.e., in the direction indicated by the small horizontal black arrow in FIG. **8**D, because object **401** prevents such deflection), and the downward force is instead imposed along the deflectable flange in the direction shown by the large black arrow in FIG. **8**D. This force drives the deflectable flange (particularly its peripheral edge, the peripheral flange if present, and the portion of the spacer nearest the peripheral edge) against the ram **300** and induces deflection of the deflectable flange, conformation of portions of the deflectable flange against the upper surface **302** of the ram (especially when the amount of heat provided by the ram is sufficient to soften those portions), and displacement of the deflectable flange across the surface of the ram. As shown in the figure, the contour of the upper surface of the ram is thereby imparted to the peripheral-most portions of the deflectable flange, resulting in smooth bending of those portions (assuming a smooth contour to the upper face of the ram) and displacement of the peripheral edge of the deflectable flange toward the body of the article (or even 'curled' back beyond the body, for example as shown in FIG. **8**C).

The shape, size, arrangement, attachments (if any) of objects **401**, **402**, and **403** are not critical. Likewise, not all three objects need necessarily be used together; one, two, or all three can be employed. In one embodiment, the three objects are fixed together to form a "lid" or "plug" for a container like that shown in FIG. **6**, so that the portion of the lid/plug that corresponds to object **401** can substantially fill the interior of the container (i.e., pressing against all walls, and especially including the four long, straight walls of the container), the portion of the lid/plug that corresponds to object **403** forms a ring that can be applied against the entire rim of the container surrounding its interior, and the portion of the lid/plug that corresponds to object **402** can be any material or mechanism that connect them. For example, such a lid/plug could be formed from a single piece of material (e.g., a 'plug' that fills the entirety of the interior and overlaps the rim surrounding the interior). One or more of the objects can be cooled to reduce heating of the shaped

article (other than where desired, at portions of the deflectable flange) and to thereby prevent undesired deformation of the shaped articles during processing.

Generalized, object **401** is simply a mass for preventing flexing of the sides of the shaped article during deflection of the deflectable flange. Such an object may fill substantially all portions of the interior of the shaped article (e.g., the entire interior of the container shown in FIG. **6**D). Alternatively, one or more objects **401** may be used to buttress portions of the shaped article that are more easily deflected than others (e.g., the long straight sides of the container shown in FIG. **6**D).

Object **403** can be any object that can urge the deflectable flange against the ram. Multiple objects can be used to urge the deflectable flange against one or more rams at various locations on the article, or a single object **403** that contacts the article at or near all portions of the deflectable flange can be used. In one embodiment, object **403** is the upper body **200** described herein, such as in the form that completely surrounds the rim of a container such as that shown in FIG. **6**D. Object **403** can be a frame designed to fit snugly against the entire rim of a container surrounding an internal concave compartment of the chamber, so as to simultaneously urge a deflectable flange that completely surrounds that rim against a ram in the manner described herein. In one embodiment, object **403** can be deliberately cooled (e.g., by directing a cooling fluid such as chilled water, chilled oil, or ambient air against or through the object, particularly where the object is made of a good conductor of heat, such as a metal) so as to reduce, inhibit, or prevent heating of the body of the shaped article during processing (e.g., as shown in FIG. **8**D). Object **403** can be linked, rigidly or movably, with object **401** so that the flex-resisting object **401** can be applied to the interior of a shaped article simultaneously with application of force to the deflectable flange of the shaped article by object **403**.

Object **402**, when present, can be an object that connects object **403** to a source of force, an object that holds object **401** in place within a concave portion of shaped article **100** during deflection of deflectable flange **160**, or a combination of these.

As illustrated in FIGS. **9**C and **9**E, an additional advantage of the rolled-over edge formed by this process is that the rolled edge can be used instead of conventional stacking lugs (i.e., thermoform-shaped portions of articles contoured to limit how closely an article can nest within another otherwise-identically shaped article). Such known stacking lugs, in order to perform their desired anti-nesting function, must furthermore be narrower at their upper end than their lower end (referring to FIG. **9**D as an example) in order to prevent nesting of the stacking lugs of adjacent trays. This 'narrower-at-the-top' conformation presents known difficulties with de-molding the trays during thermoforming, since the narrower 'top' portion of the lug must be stretched or deformed over the larger 'bottom' portion of the lug mold in order to remove the thermoformed tray from the mold. The rolled edge depicted in FIGS. **8** and **9** (i.e., made as described herein) avoids this difficulty, while still preventing inappropriately close nesting of adjacent trays. Trays having the rolled edge described herein can be separated using conventional de-nesting equipment (e.g., screw- and finger-based machines for separating adjacent nested/stacked trays) and, as shown in FIG. **9**E, permit denser packing of trays than is possible using trays having formed stacking lugs.

FIG. **9**F illustrates an optional embodiment of the rolled edge described herein that also affects the stacking characteristics of shaped articles having the rolled edge. On the right side of FIG. **9**F are shown three stacked trays having the rolled edge described herein, the rolled edge being substantially identical (including in height) about the entire periphery of the tray. On the left side of FIG. **9**F are shown three other stacked trays, these trays also bearing a rolled over edge as described herein about their entire periphery. However, in contrast to the trays on the right of the figure, the rolled edge of those on the left are not uniform about their entire periphery. As shown in the figure at one corner, a smaller portion of the deflectable flange has been rolled over at the corners of these trays than the portion of the deflectable flange that is rolled over along other portions of their edge. As a result, the trays bear rounded stacking extensions **180** at their corners. Like that stacked trays shown on the right of FIG. **9**F, those on the left of the figure are nested within one another and settle until the lower surface of the rolled edge of a tray contacts and rests upon the upper surface of the rolled edge of a second tray within which it is nested. However, because the stacking extensions **180** of the trays on the left of the figure have a greater height than much of the rest of the rolled edge of those trays, the trays on the left will nest such that the lower surface of a stacking extension **180** rests on the upper surface of the rolled edge of a tray beneath it, leaving the lower surface of much of the rolled edge of the upper tray out-of-contact with the tray beneath it, yielding a gap between the nested trays (compare the gap indicated by the large brackets in the left of FIG. **9**F with the indentation indicated by the small brackets in the right of FIG. **9**F). When a shaped article **100** is given a rolled over edge including a stacking extension **180** as described herein, the degree to and way in which the deflectable flange is deflected should nonetheless be selected to position the peripheral edge **110** at the stacking extension **180** such that it is unlikely to contact films or other materials at the periphery of the article **100**, as described herein.

Yet another advantage of the 'rolled edge' depicted in FIGS. **8** and **9** is the mechanical strength imparted to a shaped article by such an edge conformation. Thin plastic films tend to be highly flexible, and articles formed from such films can have 'flimsy' edges that are easily deformed upon handling or manipulation (e.g., during sealing or wrapping with film). For the same reasons that hollow tubes or rounds of material tend to be stronger and more rigid than planar sheets of material of the same type and thickness, the curved or rolled edge described herein confer greater edge strength and rigidity to the shaped articles described herein than corresponding articles lacking such an edge. This edge strength and rigidity permits formation of lids upon, or engagement of separately-made lids with shaped articles described herein. Thus, in addition to the shaped articles being sealable with film using OW, VSP, or MAP technologies, the enhanced edge strength of the shaped articles described herein permits them to be sealed with snap-on/snap-off type lids or other conventional sealing technologies. The edge strength and rigidity conferred to the shaped article also prevents deflection induced by tension in a film used to overwrap or seal the article (e.g., so-called "bow-tying" as the phenomenon of a concave article closing upon its concavity when wrapped or sealed) and to withstand stresses imposed by (or necessary to the operation of) container-handling equipment, such as de-nesting equipment used for segregating individual containers from a stack of nested containers.

What is important in these methods is that the potentially sharp peripheral edge **110** of the thermoplastic sheet(s) from which the article **100** is formed should be deflected away from the periphery of the article and 'frozen' in that position

by heat-softening and cooling a portion of the sheet that is bent (which will normally include substantially only portions of the deflectable flange) while the sheet is so deflected. The heated, bent, and cooled region preferably includes at least the bend region **150** of the deflectable flange **160**, because that region is designed for smooth flexing and yields a smooth periphery to the container. Softening, flexing, and hardening of other portions of the deflectable flange (e.g., the extension **50**, spacer **140**, elbow **130**, and/or peripheral flange **120**) can also (or alternatively) be done, and can contribute to smoothness of the article's periphery.

Alternatively, any of these portions of deflectable flange **160** can simply be bent without heating, so long as sufficient bending force is applied that the thermoplastic material irreversibly bends (rather than merely reversibly deflecting upon removal of pressure) at the bent location. However, non-heating-and-softening-based bending methods will tend to leave relative sharp (or, at least, less smooth) edges where bends are imposed, and so such methods are not favored unless care is taken (e.g., by bending materials about a rounded 'mold' member) to ensure that such bends are smooth. The deflectable flange **160** disclosed herein provides a convenient structure for practicing this method.

The Deflectable Flange **160**

The deflectable flange includes a bend region **150**, a peripheral edge **110**, and a spacer **140** interposed between the two. The bend region forms an angle of less than 180 degrees between the body **10** and the spacer **140** and functions as a flexible 'hinge' at which the spacer region can be displaced relative to the body. The angle formed by the bend region (i.e., the angle designated A in FIG. **1**A) is preferably about ninety degrees (i.e., approximately a right angle, meaning not less than 75 nor more than 105 degrees, more preferably not less than 85 nor more than 100 degrees, still more preferably not less than 87 nor more than 93 degrees, and most preferably about 92 degrees). When this angle is less than 90 degrees, it can be difficult to remove the thermoformed article from the thermoforming mold (i.e., because the portion of the mold nearest the extension between the spacer and the body can be broader than the width between the body and the spacer nearer to the peripheral edge, meaning that the thermoformed article will 'grip' the mold and must be pulled or expanded to displace it from the mold). Thus, it is preferable that the angle formed by the bend region is 90 degrees or greater (e.g., 91, 92, 93, 94, or 95 degrees) to ease separation of the thermoformed article and the mold, but the angle can be smaller if the body of the article recedes away from the periphery, for example. Less preferably, an angle of 110, 115, 120, 125, 130, or 135 degrees can be employed, but such articles may require application of both an upper body **200** to reduce the angle near to 90 degrees prior to impacting the deflectable flange against the ram **300**. As this angle increases, the amount of thermoplastic that is present at exterior corners (e.g., the four corners of the tray shown in FIGS. **6**A and **6**B) of the thermoformed precursor article increases and can interfere with bending (i.e., "rolling-over"). This thermoplastic material can be accommodated, for example, by permitting the spacer to 'bow out' above the ram (or into a space built into the upper surface of the ram) at sections where the material occurs.

Upon sufficient displacement of the spacer, the bend region forms the periphery of the article (i.e., when the spacer is bent "under" the connected portion of the body, regardless of orientation relative to gravity). Thus, the bend region will normally form the smooth periphery of the article that is desired in one embodiment. The spacer nonetheless forms a part of the periphery of the article in this embodiment (normally the "underside" of the periphery, relative to the article **100**, with the underside **161** of the deflectable flange **160** being contained within the curvature of the rolled-over edge). For this reason, portions of the spacer (potentially including the elbow **130** and the peripheral flange **120**) that are reasonably accessible to a film or other material pressed against the exterior of the article (e.g., against the underside of its periphery) should preferably be smooth as well.

In formation of the shaped articles with a smooth periphery described herein, deflection of the spacer (and/or other portions) of the deflectable flange induces bending within the bend region, within the spacer, or both. The angular shape of the bend region both controls the location of that bending and the smoothness of the resulting edge. As illustrated in FIGS. **1** and **8**, it can be beneficial if the angular portion of the bend region is not formed as a sharp (i.e., bi-linear) angle, but is instead formed as flat portions (e.g., an extension **50** and a spacer **140**) arranged at an angle to one another, with a curved portion (e.g., defined by a radius of curvature, such as a radius of 1, 2, or 3 or more millimeters) connecting the flat portions. Flexing of a curved angular portion will tend to yield a smoother, less film-damaging edge that flexing of a sharply angled portion. As illustrated in FIGS. **1**, **4**, **5**, **7**, and **8**, the boundary between the bend region **150** and the spacer **140** may be substantially indistinguishable in practice, and flexion of the spacer **140**, at least at its extent nearest the bend region **150** is expected in the embodiments shown. As illustrated in FIG. **8** especially, bending of multiple portions, including the peripheral-most portion(s), of the spacer **140** can desirably impart a smooth periphery to the articles prepared as described herein.

In one embodiment (shown in FIG. **1**), the deflectable flange **160** includes at least three portions, including the bend region **150**, a peripheral flange **120**, and an elbow **130** positioned therebetween. The bend region **150** is connected to the remainder of the article **100**, optionally by way of an extension **50**. The peripheral flange **120** is connected to the bend region **150** by way of the elbow **130**, optionally with a spacer **140** interposed between the bend region **150** and the elbow **130**. A prototypical deflectable flange **160** having each of these portions is illustrated (attached to the body **10** of an article **100**) in FIG. **1**A.

In this embodiment, the bend region **150** is situated anti-peripherally (nearer the body **10**) than at least the peripheral-most portion of the peripheral flange **120**. The function of the bend region **150** is to deflect when the peripheral flange **120** is deflected inwardly (i.e., anti-peripherally, such as by pressing the periphery of the article against a solid object). Deflection of the bend region provides a smooth surface because the peripheral edge **110** of the thermoplastic sheet is not located within the bend region; it is located on the peripheral flange **120**. The angle formed by the bend region (for example, approximately 90 degrees over the bend region **150** shown in FIG. **1**A) is not critical, and can be selected for ease of manufacture. It can, for example, be an obtuse angle, a right angle, or even an acute angle. When this angle is an acute angle, it can be difficult to remove the thermoformed (pre-roll-over) article from its thermoforming mold (because the peripheral portion of the spacer must be deflected to remove the article from the mold), and acute angles are disfavored for that reason (even though such articles can still be made). The radius of curvature of the bend region **150** is also not critical, although it is preferably substantially greater than the radius of curvature of the elbow **130**.

The bend region **150** preferably has the conformation of a smooth curve, as shown in FIG. **1**A, with a substantial radius of curvature (e.g., 0.5 millimeters to several millimeters or more), so that inward deflection of the deflectable flange **160** yields a smooth periphery to the article. However, it is critical that the bend region **150** simply not be sharp or pointed; a non-sharp crease can suffice, for example. Fragile materials, such as thin plastic films or animal skin, which contact that smooth periphery are much less likely to be damaged than when the same fragile materials contact the peripheral edge **110** of the thermoplastic sheet.

The bend region **150** can be connected with the remainder of the article **100** by way of an extension **50**. The extension **50** can be discretely discernible from the bend region **150** (e.g., a flat region distinct from a curved bend region **150**) or substantially indistinguishable (e.g., a slightly curved region not readily distinguished from the curvature of the bend region **150**). The dimensions of the extension region are not critical; it can range from non-existent (i.e., the bend region **150** commences at the edge of a body **10** of the article **100**), to a fraction of a millimeter, to several millimeters or longer. One function of the extension **50** is to separate the bend region **150** (at which sheet-softening heat is applied in some embodiments) from other portions of the article **100** at which potential heat-induced deformation is undesirable. Another function of the extension **50** can be to provide a functional surface to the article **100**, such as a surface adjacent the bend region **150** at which a thin plastic film (which can be pressed against the bend region **150** with little danger of damage to the film) can be adhered to or fused with the article **100** (e.g., to cover a cavity formed in the article that is bordered by the deflectable flange **160** of which the extension **50** is part). The extension **50** can also serve a structural function, such as providing support or rigidity to a section of the article (e.g., by forming a relatively rigid "rim" about a cavity in a container to inhibit flexing of the container while lidding is applied). Yet another function of the extension **50** can be to provide a space which the deflectable flange **160** can occupy when it is deflected anti-peripherally. Because the extension **50** and the peripheral flange **120** are situated on opposite sides of the bend region **150**, sufficient flexing of the bend region **150** (e.g., upon insertion of the article **100** within the upper body **200** and insertion of the ram **300** behind the article), the spacer **140**, or both, can cause the peripheral flange **120** (and the spacer **140**) to approach, or even contact, the extension **50**, or to curl or deflect beneath the extension **50** between the periphery of the article and a sidewall of the body of the article (see, e.g., FIG. **6**E).

In FIG. **1**A, the peripheral flange **120** includes the (potentially sharp) peripheral edge **110** of the thermoplastic sheet (s) from which the article is formed. It extends peripherally beyond the bend region **150**, so that it will impinge upon the inner surface **202** of the upper body **200** when the article is inserted into the cavity of the upper body **200**, as shown in FIG. **1**B. It extends from the elbow **130** to that peripheral edge **110** and extends in a direction from the bend region **150** or the spacer **140**, if present, by an offset angle defined by the elbow **130**. The function of the peripheral flange **120** is to engage with (i.e., impinge upon or be impinged upon by) the inner surface **202** of the upper body **200** when the article is inserted into the cavity of the upper body **200**, thereby causing the deflectable flange **160** to deflect inwardly (anti-peripherally). In addition to displacing the peripheral edge **110** of the sheet anti-peripherally and causing flexing or bending of the deflectable flange **160** in the bend region **150** thereof, this deflection also positions the peripheral flange **120** to be further anti-peripherally deflected when the ram **300** is inserted into the cavity behind the article **100**. When the ram **300** is so inserted, it impinges upon the peripheral flange **120** and, upon further advancement of the ram into the cavity, causes both additional flexing or bending of the deflectable flange **160** in the bend region **150** thereof, and additional anti-peripheral deflection of the peripheral edge **110**.

The length (elbow-to-peripheral-edge) of the peripheral flange **120** is not critical, but should be selected to facilitate engagement of the ram **300** by the peripheral flange **120** and displacement of the peripheral flange **120** by the ram **300** as the ram advances within the interior of the upper body **200**. Frequently, the length of the peripheral flange **120** is influenced, at least in part, by the ability to cut articles from a material in which the article is formed. The elbow **130** can function, in part, to position the thermoplastic sheet at a location at which it can be conveniently cut to free the shaped article from a precursor sheet. Because the peripheral edge **110** formed by such cutting is a source of sharpness or roughness at the periphery of the article prior to 'rolling over' the deflectable flange **160**, it can be beneficial to cut the sheet as near to the elbow **130** as possible (i.e., to make peripheral flange **120** as small as possible) so as to reduce the bulk of thermoplastic material that must be displaced in order to displace the sharp or rough peripheral edge **110** from the periphery of the article. As illustrated, for example, in FIG. **8**H, a larger peripheral flange also reduces contact (and increases spacing) between the upper surface of a ram which impinges the deflectable flange, and therefore reduces heat transfer from the ram to peripheral portions of the deflectable flange. Because the methods described herein depend upon heating those portions above their glass transition temperature, deflecting them to a desired conformation, and then cooling the portions below that temperature, larger peripheral flanges increase the heat input and/or time required for such processing and are disfavored for that reason as well.

The elbow **130** is interposed between the bend region **150** and the peripheral flange **120**, and its function is to connect and transfer forces between them. That is, compressive forces applied to the peripheral flange **120** by impingement thereupon by the upper body **200** or the ram **300** are translated through the elbow **130** (and the spacer **140**, if present) to torsional force applied to the bend region **150**. This translation of compressive force to torsional force ensures that the bend region **150**, the spacer **140**, or both flex when force is applied to the peripheral flange **120**. Thus, application of force to the peripheral flange **120** by the upper body **200** and/or ram **300** both deflects the peripheral edge **110** anti-peripherally (i.e., displacing the potentially sharp edge away from the periphery of the article) and induces bending of the bend region **150**, the spacer **140**, or both (i.e., yielding a smooth periphery formed by flexed thermoplastic sheet at the periphery of the article), yielding an article which has a smooth periphery, even if the article was formed by a process that yields a sharp peripheral edge at an intermediate step. In effect, the elbow causes forces applied to the peripheral flange **120** to induce the deflectable flange **160** to "roll over" the periphery of the article, effectively "hiding" the sharp edge of the thermoplastic sheet from materials at the periphery of the article.

A spacer **140** can be interposed between the bend region **150** and the elbow **130**. The spacer **140** can be discretely discernible from the bend region **150** (e.g., a flat region distinct from a curved bend region **150**) or substantially indistinguishable (e.g., a slightly curved region not readily

distinguished from the curvature of the bend region **150**). The dimensions of the extension region are not critical; it can range from non-existent (i.e., the bend region **150** commences at the elbow **130**), to a fraction of a millimeter, to a few millimeters or longer. One function of the spacer **140**, if present, is to act as a 'lever' by which force applied at the elbow **130** (e.g., by impingement between the peripheral flange **120** and one or both of the upper body **200** and the ram **300**) is transmitted to the bend region **150**. Another function of the spacer **140**, if present, can be to position the peripheral flange **120** suitably to engage one or both of the upper body **200** and the ram **300**. Yet another function of the spacer **140**, if present, is to increase the distance by which the potentially sharp peripheral edge **110** of the thermoplastic sheet can be displaced anti-peripherally from the periphery of the article upon flexing of the bend region **150**. All else being equal, the longer the spacer **140** is, the farther from the article's periphery that potentially sharp edge will be when the article is made as described herein. A deflectable flange including the spacer **140**, but lacking the elbow **130** and peripheral flange **120** can be used, as shown for example in FIGS. **8**A-**8**D.

A longer spacer **140** facilitates formation of one or more portions of the "rolled edge" that is taller than other "rolled" portions of the edge, yielding a structure useful as a stacking lug (e.g., to facilitate selectable spacing between the rolled edges of adjacent nested, stacked articles). In one embodiment, the size of the spacer and the compressive force applied to the spacer (i.e., the force transmitted to the spacer from the extension region, balanced by resistive force applied to the spacer on account of its impingement upon the ram) can cause the spacer to flex outwardly (i.e., peripherally away from the body of the article), forming a smooth bulge that, upon cooling, forms the outer periphery of the article.

Regardless of whether the bend region **150**, the spacer **140**, or both are bent in the operations described herein, and further regardless of whether material that was originally part of the bend region **150**, the spacer **140**, or both ultimately form the outer periphery of the articles described herein, what is important is that that outer periphery be free (or, less favorably, substantially free) of sharp, pointed, rough, or abrasive edges that might damage thin plastic films, human tissues, or other fragile materials which might contact that outer periphery.

Thermoplastics

The methods and articles described herein can be performed and made with substantially any thermoplastic material. What is important is that the material be capable of being softened by heating and re-stiffened upon cooling, at least in the deflectable flange **160** described herein. Substantially all thermoplastics exhibit a characteristic temperature above which they soften and become flexible or workable and below which they become more rigid and retain their shape. Desirable thermoplastics for the articles and methods described herein retain their shape under normal conditions of the anticipated end use of the container. It is also desirable to use thermoplastics which can be softened under conditions that are readily attainable in a manufacturing environments. Examples of suitable thermoplastics include polyethylene (PE), polypropylene (PP), polyethylene terephthalate (PET), and polyvinyl chloride (PVC). Other suitable thermoplastics are apparent to skilled workers in this field, and substantially any of these can be used. Also potentially useful are flexible plastics having deformable materials such as metal foils bound to their surface.

The thermoplastic article includes a thermoplastic material, including at at least the portions of the article at which the deflectable flange **160** described herein is formed or present. The identity of the thermoplastic material is not critical, nor is the presence or absence of non-thermoplastic materials. Where non-thermoplastic materials are present (e.g., in a thermoplastic sheet to which a metal foil or a paperboard layer is laminated), the rigidity imparted to the article by the thermoplastic material in its non-softened, non-molten state is preferably sufficient to define the conformation of the article, even when the non-thermoplastic material is bent. The article can include one or more peelable layers, for example as described in co-pending U.S. patent application Ser. No. 13/415,781. When one or more peelable layers is present, it is substantially unimportant whether those layers are "rolled over" at the peripheral edge of the shaped article (rather than the edges of the peelable layers peeling from the underlying substrate). Both for aesthetic reasons and to promote sealing, it can be preferable that any peelable layers remain adhered. When peelable layers are present and adherence is to be promoted, the working temperature should be selected both to be suitable for deflection of the deflectable flange as described herein and for working the substrate and peelable layers of the shaped article without causing delamination of the peelable layers.

The Upper Body **200**

The upper body **200** performs a number of functions. Overall, its function is to contain the deflectable flange **160** described herein within a cavity in the upper body **200** while heat is applied to one or more portions of the bend region **150** thereof. This containment function can prevent non-desired deformation (or guide desired deformation) of the deflectable flange **160** or portions of it during the periphery-smoothing operations described herein. The shape of the interior cavity of the upper body **200** can also affect the shape of the deflectable flange as it bends, particularly as it is softened. By way of example, in FIG. **1**B, the upper body **200** includes a cavity with an internal right angle into which a portion of the bend region **150** is forced; the right-angle shape of this portion of the cavity will tend to cause the bend region **150** to conform to a right-angle shape, especially as the bend region **150** softens. The heat source can be a part of the upper body **200**, applied to the upper body **200** for conduction of heat therethrough, for example. The upper body **200** also impinges upon and is impinged upon the peripheral flange **120** of the deflectable flange **160** when it is inserted into that cavity. When a ram **300** is used, the upper body **200** also serves to prevent the deflectable flange **160** from being forced out of the cavity, and it can also limit deflection of the bend region **150** when the deflectable flange **160** is being compressed by the ram **300**.

The materials from which the upper body is constructed are not critical, other than that they should be suitable to withstand the manufacturing conditions described herein. That is, they should not melt or degrade at the temperatures used in the processing. A wide variety of metal, ceramic, stone, and polymeric materials can be used.

It is important that the shape of the upper body **200** be selected so that impingement between the interior of the cavity in the upper body **200** and the peripheral flange **120** will occur when the article **100** described herein is inserted into the cavity in the upper body. The upper body can have a shape sufficient to simultaneously impinge multiple peripheral flanges **120** on an article, or to impinge upon most or all of a single peripheral flange **120** that occurs upon an article (e.g., one which occurs about the entire peripheral edge of an article). As illustrated in FIG. **2**, the upper body

200 can be formed of a solid block of material that covers an entire face of an article while impinging peripheral flange(s) 120 that occur on one or more portions of the article. The upper body 200 depicted in FIG. 2, for example, is designed to impinge upon the single peripheral flange 120 that extends completely around the periphery of an article having the shape of a rectangular tray-type container having rounded corners.

The bend region 150 of the articles described herein will typically be within the cavity of the upper body 200 when heat is applied to that bend region 150. For that reason, the upper body should be constructed in a way that facilitates application of such heat. The upper body 200 can, for example, include a heat source (e.g., electrically operated heating plates or rods) within it, applied to it, or fluidly connected with it. Alternatively, the upper body 200 can include one or more ports through which a heated fluid (e.g., a heated gas or liquid) can pass from a source into the interior of the cavity therein. The method selected to deliver heat to the bend region 150 (and/or other portions of the peripheral flange, such as the spacer 140, the elbow 130, and the peripheral flange 120) is not critical, and any of a variety of well-known heat delivery methods and equipment can be used. If the upper body 200 is able to conduct heat and is cooled, then heat that is present in the deflectable flange 160 during its shaping can flow to the upper body 200, and this heat flow can serve to cool and thereby stiffen the deflectable flange 160 in its deflected position upon its compression between the upper body 200 and the ram 300, for example.

As shown, for example in FIGS. 5 and 8, the deflectable flange can be deflected using a ram 300 alone, with or without use of an upper body 200. The upper body can be used both to partially deflect the deflectable flange and to apply force to the article so as to impinge the deflectable flange thereof against the ram. When the upper body 200 is not used, some alternate means of applying force to the article to cause impingement between the ram and the deflectable flange must be used. In FIG. 8D, for example, this alternate means is depicted simply as object 403 (optionally coordinated with object 402). The orientation of the parts relative to gravity is not important, the "downward" force (open arrow in FIG. 8D) need only be directed so as to urge the deflectable flange 160 against the ram 300 to cause impingement between the two. It is also immaterial to which of the article and the ram (or both) force is applied in order to cause such impingement. What is important is that impingement of the deflectable flange 160 against the ram 300 (and/o the upper body 200, if used) induces deflection of the peripheral edge 110 of the deflectable flange to a position where it is not readily accessible at the periphery of the article. Thus, in one embodiment, the upper body 200 can be a simple flat plate which can be applied against a flat portion (e.g., the extension 50 of the deflectable flange 160 depicted in FIG. 8D) of the article to drive the deflectable flange in the direction of, and ultimately against, the ram.

The Ram 300

The primary function of the ram 300 is to induce deflection in the deflectable flange. The ram can be used with or without a corresponding upper body 200, but such an upper body can serve to contain and control the article as it is contacted with the ram. The method and mechanism(s) used to impart relative motion between the article and the ram are not critical. When an upper body is employed, the ram is used to impinge upon and apply compressive force to the peripheral flange 120 of the deflectable flange 160 when the article is disposed in the upper body 200. This compressive force tends to drive the peripheral flange 120 upwardly toward the bend region 150 and the extension 50, if present, and anti-peripherally, thereby moving the potentially sharp peripheral edge 110 of the thermoplastic sheet away from the periphery of the article so formed. Accordingly, the design of the ram 300 is not particularly critical, so long as such compressive force is applied. As illustrated in FIGS. 1C and 4, a ram 300 having an angled upper face 302 will tend to direct the peripheral flange 120 in the direction along that angle as it compresses the peripheral flange 120. Thus, it can be beneficial to shape the upper face 302 of the ram 300 in a conformation that deflects or "pushes" the peripheral flange 120 and/or the peripheral edge 110 anti-peripherally as compression occurs.

Like the upper body 200, the materials from which the ram 300 is made are not critical. Metals, ceramics, stones, and polymeric materials capable of withstanding the temperatures and pressures of operation are suitable and readily selectable by a skilled artisan. If the ram 300 is able to conduct heat and is cooled, then heat that is present in the deflectable flange 160 during its shaping can flow to the ram 300, and this heat flow can serve to cool and thereby stiffen the deflectable flange 160 in its deflected position upon its compression between the upper body 200 and the ram 300, for example. Heat can likewise be provided by the ram 300 to one or more portions of the deflectable flange in conventional ways, such as by using a heated ram or incorporating a heating element into or onto the ram.

In an embodiment illustrated in FIG. 2, a single ram 300 can be constructed to impinge upon substantially all peripheral flanges 120 of an article simultaneously. The ram 300 depicted in FIG. 2, for example, is designed to impinge upon and apply compressive force to the single peripheral flange 120 that extends completely around the periphery of an article having the shape of a rectangular tray-type container having rounded corners.

In an alternative embodiment illustrated in FIG. 5, the deflectable flange 160 of an article is heated to softening and impacted against a ram 300 in the absence of an upper body 200 of the type described herein. The absence of an upper body 200 may lead to distortion or deflection of softened portions of the deflectable flange 160, at least if the other portions (e.g., the extension 50 or parts of the body 10 of the article 100 that are adjacent the deflectable flange 160 are insufficiently rigid to prevent such distortion or deflection. However, if such rigidity is present, or if such distortion or deflection is tolerable in the final product, the methods described herein can be used without an upper body 200.

FIG. 5 also illustrates the significance of the length (measured from the elbow to the peripheral edge) of the peripheral flange. The peripheral edge contacts the ram. Force imparted upon the peripheral edge by the face 302 of the ram induces deflection of the deflectable flange 160 toward the body 10 of the article 100. When the deflectable flange 160 includes a peripheral flange 120 that is offset from the spacer portion 140 by a ninety-degree elbow 130, as shown in FIGS. 5A and 5B, the length of the peripheral flange will influence the degree of deflection of the deflectable flange. Comparing FIG. 5C (a deflectable flange in which the "length" of the peripheral flange is zero; i.e., a deflectable flange lacking a peripheral flange) with FIG. 5B, it can be seen that the presence of the peripheral flange induces greater deflection of the deflectable flange in the configuration shown. Moreover, looking to FIG. 5A, increasing the length of the peripheral flange increases the degree of deflection induced by the ram. Thus, although the

elbow and peripheral flange are optionally not present, their presence enhances deflection and can enhance the "rolling" effect that can be achieved.

FIG. **10** depicts an embodiment of the ram **300** described herein for rolling over the edge of a shaped article having a deflectable flange **160**. FIG. **10**A depicts a ram **300** having at least two positions for accepting articles **100** having deflectable flanges as described herein. The upper portion of the figure shows a position that bears an article **100**. Because it does not bear an article, the position partially shown in the lower right of the figure reveals the upper surface **302** upon which the article is borne when present. The position in which an article is borne in the figure has an identical upper surface **302**, but it is obscured by the spacer **140** and peripheral flange **120** of the article **100** borne therein. This figure also illustrates how the extension **50** spaces the body **10** of the article away from the spacer and away from the ram, providing space (visible through the clear material that forms the extension) into which the spacer and peripheral flange can be deflected, bent, or curled.

FIGS. **10**B and **10**C show details of the upper surface **302** of the ram **300**, including a curved portion (at approximately D in FIG. **10**C) which will deflect the peripheral edge **110** of the deflectable flange when urged against it at a softened temperature. FIG. **10**B is a close-up image of the upper surface, and FIG. **10**C is a cross-sectional diagram illustrating the approximate shape of that upper surface. In operation, the ram is used by impinging the peripheral edge **110** of the deflectable flange against the upper surface **302** (from the 'downward' direction indicated by the open arrow in FIG. **10**C) at a position anywhere between positions B and D, and then applying further downward force to drive the peripheral portion of the deflectable flange further against the ram. This further force induces the peripheral edge to slide, scrape, or skip across the upper surface and induces the deflectable flange to deflect inwardly (i.e., toward the body of the article which, in this embodiment, is located closer to the E position than to any of A-D). When the deflectable flange is heated above its softening point (i.e., glass transition temperatures), this deflection will be non-elastic and will be reflected in the shape of the deflectable flange if it is thereafter cooled to a temperature below its softening point.

The curved portion of the upper surface **302** of the ram **300** between positions C and E in FIG. **10**C induces the softened portion of the deflectable flange to roll or curve, and the degree of curvature induced is controlled by the extent to which the deflectable flange is impinged against the ram. Thus, for example, only the peripheral-most portion of the deflectable flange might be deflected if the deflectable flange is caused to impinge only slightly against the upper surface after softening, the peripheral edge will be pointed approximately toward the body if a softened portion of the deflectable flange is impinged to the extent of position D, and the peripheral edge of the deflectable flange will be effectively "rolled over" (i.e., the plane of the deflectable flange at its peripheral edge extends to intersect the underside **161** of the deflectable flange) if a softened portion of the deflectable flange is impingingly extended beyond position D (as shown in FIGS. **8**G and **8**K, for example). Depending on the material from which the deflectable flange is made, the deflectable flange can substantially retain its shape as it cools in the 'rolled over' configuration (e.g., PET and PVC materials tend not to slump or droop when acted upon by gravity in a softened state, while PE and PP materials can be bent substantially by gravity alone when softened). Even when this is not so, so long as the peripheral edge of a deflectable flange that droops or slumps does not expose the peripheral edge at the periphery of the article, such bending is acceptable (e.g., when the rolled-over edge is rolled over sufficiently that any drooping occurs in the interior space of the roll).

Sealing Films

An important advantage of articles having peripheries treated in the manner described herein is that such treatment renders the articles suitable for sealing with thin plastic films. Sealing articles with thin plastic films is a well-known process, and many suitable films are known (e.g., thin monolayer or multilayer sheets made of materials such as polyethylene or polyvinylidene chloride, optionally including polymer layers which inhibit passage of moisture or certain gases). Articles can be sealed with plastic films, for example, by completely enveloping the article in the film and sealing the film to itself. Alternatively, articles can be sealed by sealing a film about the periphery of a concavity, compartment, or other orifice defined by an article and, if desired, thereafter trimming the portion(s) of the film beyond that periphery. All technologies for sealing articles with thin plastic films are believed to involve at least intermittent contact between peripheral areas of the article and the film used for sealing.

It is therefore beneficial for an article to be sealed with a thin plastic film to be free, or at least substantially free, of sharp, pointed, rough, jagged, or abrasive structures, at least at areas of the article which contact the film. It is particularly important that such structures be absent from the surface of the article which will necessarily contact sealing films, and highly desirable that these structures are also absent from article surfaces which are likely to contact sealing films, whether during the sealing process, or whether during further packaging, shipping, unpackaging, or retail display of the film-sealed article. Still more preferably, articles to be wrapped with a thin film bear no such structures at surfaces at which there is a substantial likelihood of contact between the surface and the film during any of these processes. Ideally, the articles bear no such surface at any position at which a film used for sealing might reasonably be expected to contact the surface position during these processes.

A wide variety of thin plastic films are known to be useful for sealing containers, and substantially any of these films can be used to seal the shaped articles described herein (or compartments thereof). Selection of sealing films (and materials for making shaped articles compatible with such sealing films) is well known in the art, and substantially any known combination of materials can be adapted for use with the shaped articles described herein. By way of example, when a sealing film is to be removably sealed about a shaped article described herein (e.g., an overwrap film that is sealed to itself but not to the wrapped article), the materials used to make the shaped article should be selected such that it will not fuse with the film under the sealing conditions to be used. By contrast, when a sealing film is to be substantially permanently sealed to a shaped article (e.g., about the perimeter of a compartment defined by the article), the material(s) used to make the article should be selected to facilitate formation of a substantially permanent seal under practical processing conditions. Similarly, combinations of sealing and container materials and operating conditions that yield containers sealed with material that is peelable therefrom are known and can be used.

One highly desirable embodiment of the articles described herein is a tray-shaped article that is made by thermoforming (and that therefore possesses potentially sharp peripheral edges prior to the edge-rolling treatment described herein)

such that it possesses about its entire periphery the deflectable flange described herein and for which the peripheral edge is deflected beneath the extension and behind the spacer and bend region of the deflectable flange, about the entire periphery of the tray, sufficiently that the peripheral edge cannot be touched by a human fingertip that is swiped along the gap between the deflected peripheral flange and the body of the tray, even if that fingertip is swiped along this gap around the entire periphery of the tray. Such a tray will bear no sharp, pointed, rough, jagged, or abrasive edge at any position that can reasonably be expected to contacted by a sealing film, regardless of whether OW, VSP, or MAP technology is used in the sealing process. A tray suitable for use with all of these sealing technologies is highly desirable and believed to be unavailable prior to the disclosure of the subject matter described herein.

Many plastic films used for sealing of articles are flexible and do not thermoset over the range of temperatures ordinarily employed during sealing and subsequent handling. Flexible films that are sealed to surfaces are sometimes difficult to remove in a single piece from the sealing surface. For example, a flexible film that is sealed about the flat periphery of a tray may tear or split when one portion of the film is pulled away from the tray, potentially requiring a user to remove the film in multiple passes or many strips or pieces. Such difficulties may be particularly acute in situations in which the sealing surface is broad, such as in a VSP-sealed package in which a sealing film may be adhered to or fused with a relatively large area of a tray on which an item has been sealed between the film and the tray. The technology described herein can be used to reduce or overcome this difficulty as follows.

The shaped articles described herein (e.g., a tray-shaped article having a smooth periphery) can be sealed with a thermosettable (i.e., thermoformable) film to yield an article in which the thermoformable sealing film is heated above its glass transition temperature to soften it and applied against the smooth periphery of the shaped article. A thermoformable film that is heated above the glass transition temperature of the material of which it is made and thereafter cooled below that temperature will retain whatever conformation the film has (e.g., a conformation imposed upon it) when the temperature falls below its glass transition temperature. Thus, if a thermoplastic film is formed "around" (i.e., extending more than about 90 degrees about) the smooth outer periphery of an article described herein, the film will be held to the article not only by whatever attraction or adhesion may exist between the film and the article surface, but also by mechanical forces (i.e., the film's resistance to deflection about the smooth outer periphery), forming a structure analogous to a "snap off" lid.

Even though softened thin plastic films can be extremely delicate (e.g., liable to be damaged by sharp, pointed, rough, jagged, or abrasive surfaces), the smooth periphery of the shaped articles described herein permits even such delicate films to be applied thereto. In one example, a shaped article in the form of a tray having a smooth periphery can be VSP-sealed to encase an article between a softened thermoplastic sealing film and the tray, with little or no gas included within the sealed portion. Furthermore, the smooth periphery of the articles described herein permits a softened film to be drawn, pressed, or formed around the smooth periphery—that is, contacting not only the top portion of the periphery (i.e., analogous to the extension **50** of the article edge depicted in FIG. **9**B), but around the bend region **150** of the deflectable flange, and along the spacer **140** and any bent or rounded portions thereof (such as to or around the rounded underside **145** of the spacer depicted in FIG. **9**B) and thereafter set by reducing the temperature of the sealing film below its glass transition temperature. Such a seal will form a relatively rigid "lid" and, even if the film is not adhered or fused to the shaped article where the film intersects the article, frictional forces or the shape of the "lid" (e.g., turned about the rounded underside **145** of the spacer depicted in FIG. **9**B, such that the "lid" must be stretched or expanded to disengage it from the rolled over peripheral flange **160**) can hold the sealing film in place on the article. Furthermore, because softened thermosettable film can be substantially thicker, therefore stronger, and/or more rigid than thin flexible sealing films, a thermosettable sealing film can form a seal or "lid" that can tend to be more likely removable in a single piece.

In one embodiment of the shaped articles described herein, for example, the article is a tray having a food item placed thereon, with a thermosettable film draped across the food item and the periphery of the tray while the film is in a softened state; gas between the film and the tray is withdrawn to form a VSP-type seal (with the film closely opposed against the food item and the tray surface upon which the food item rests); and the film is draped around (from the top, to or around, the bottom of the periphery), optionally sealed or fused to the tray, trimmed about the bottom of the tray periphery, and cooled. In the finished tray, the "lid" formed upon cooling of the film must be "snapped off" the tray by stretching the edge of the lid around the periphery of the tray, but once this operation is performed, the entire lid can be removed from the tray in a single piece.

In another embodiment, a shaped article described herein is sealed (after its smooth outer periphery has been formed) using a thermoformable plastic film that is extended across a compartment defined by the article and at least about 90 degrees about opposed smooth peripheral sides of the article (i.e., opposite ends of a rounded rectangular tray). The film is heated above its glass transition temperature and cooled below that temperature while extended about the opposed smooth peripheral sides. If desired, a vacuum or modified atmosphere can be applied to the compartment during such sealing. The resulting article has a thermoset film cover that must be stretched (or "snapped") around at least one peripheral side of the article in order to remove the film from the article (in addition to any other seal that may exist between the film and the article).

The shaped article described herein can be used in ways which are believed to be not possible using previously-known trays. Typically, others have used containers especially designed and made for each of the various sealing technologies described herein (e.g., OW, VSP, and MAP technologies) for sealing containers with thin plastic films. That is, food trays designed for OW-sealing have been generally considered unsuitable for VSP- and MAP-wrapping (e.g., owing to the lack of surfaces suitable for sealing in VSP- and/or MAP-technologies). Similarly, the sharp edges of many containers designed for use with VSP- and MAP-sealing technologies render those containers unsuitable for overwrapping with fragile polymer films. The shaped articles described herein can be used to make shaped articles that can suitably be used as containers for sealing by any of OW, VSP and MAP technologies. Because the shaped articles are thermoformed, container surfaces suitable for VSP- and/or MAP-sealing can be included in the shape of the articles. Using the methods described herein, any edges of a shaped article which might provide a risk of tearing sealing films (or, alternatively, all edges of the shaped article) can be made to have a smooth conformation, such as

by forming a rolled-over edge or by smoothing the shape of the mold used for thermoforming the precursor article. Thus, unlike previously-known trays, the shaped articles described herein can be used with substantially any film-sealing technology.

Other advantageous uses of the shaped articles described herein relate to the smoothness of their edges. The articles can be used in substantially any environment in which it is desirable or necessary that a solid object exhibit smooth edges. By way of example, instruments used in surgical procedures are typically packaged in openable containers (to permit reuse and sterilization between uses) that are opened by personnel wearing easily-torn surgical gloves during medical surgery procedures. Thermoformed articles (e.g., so-called "clam-shell" type snap-open packages of known design) can be made as described herein, with those articles being initially made having a deflectable flange wherever they are cut from the web of thermoformed material, and thereafter rolling over that deflectable flange to yield the smooth edge described herein. Articles made in this manner will present smooth edges to users, reducing the likelihood that surgical gloves will be torn by opening such packages during surgery procedures. Similarly, thermoformed packages of known design that are employed to facilitate handling, to inhibit theft, or to achieve other ends can be adapted (e.g., by including a deflectable flange in their design and rolling it over) to take advantage of the edge-smoothing technology described herein.

System for Forming Articles

As described above, precursors of the shaped articles described herein can be formed by standard thermoforming methods, using standard thermoforming equipment. To do so, a thermoforming mold is used to make a precursor article by imposing upon a thermoplastic sheet the desired conformation of the finished article, except that the deflectable flange described herein is included at the peripheral edge(s) at which the smooth periphery is to be formed. Upon cutting the precursor article from the web of thermoplastic sheet, the edge-smoothing operations described herein can be performed by impinging the deflectable flange upon the ram (optionally with the aid of an upper body).

Newly-thermoformed precursor articles will tend to emerge from the thermoformer at a temperature close to (but below) the glass transition temperature of the thermoplastic. Impinging the deflectable flange and the ram shortly after removing the precursor article from the thermoformer can reduce the quantity of heat energy which must be supplied to one or more portions of the deflectable flange in order to achieve the desired deflection (or "rolled over" edge effect) of the deflectable flange described herein. For this reason, it can be desirable to combine the thermoformer, the ram, and an impingement mechanism into a single system or a single piece of equipment. Such a system or piece of equipment should include i) a thermoformer module capable of forming the precursor article; ii) a cutter for cutting the precursor article from a thermoplastic sheet or roll from which it was formed; iii) the ram; and iv) a mechanism for positioning the precursor article against the ram (i.e., so that the deflectable flange portions line up with the corresponding ram portions) and impinging the precursor article and the ram together. The heat required during the deflectable flange-deflection operations described herein can be provided by the ram, by the cutter (e.g., using a heated cutting blade to heat the peripheral edge and an adjacent peripheral portion of the deflectable flange above the softening temperature of the thermoplastic), by a separate heater (e.g., a radiant heating element disposed in close opposition to the ram when it is engaged against the deflectable flange), or by a combination of these. The precise selection, orientation, order, and construction of these pieces of equipment are not critical and can be selected by a skilled artisan in light of the requirements and processing steps described herein. The system or equipment can also include the plug described herein for insertion within a void in the precursor article prior to impingement of the deflectable flange against the ram.

EXAMPLE

The subject matter of this disclosure is now described with reference to the following Examples. These Examples are provided for the purpose of illustration only, and the subject matter is not limited to these Examples, but rather encompasses all variations which are evident as a result of the teaching provided herein.

Example 1

FIGS. **6**A and **6**B illustrate a thermoplastic tray which was thermoformed from a flat sheet of thermoplastic material and then cut from the sheet. The sharp edge formed by the cutting process is shown in each of these figures, with a finger touching the sharp edge. After the smoothing process described herein was performed on these trays, the appearance of the trays was approximately that shown in FIG. **3**, in which the sharp edge has been "rolled over" such that it faces the body of the tray and a smooth portion, formed by flexing at least the bend region of the deflectable flange and heating and cooling it to yield a smooth outer periphery to the tray which will not impact either upon a thin plastic film attached to the rim of the tray or upon a thin plastic film which is snugly wrapped about the entirety of the tray.

Example 2

This example is provided for the sake of explaining formation and sealing of a shaped article as described herein. In this example, formation, filling, and sealing of a container containing a cut of fresh fish is described.

A shaped article for receiving the fish is formed by traditional thermoforming methods. A thermoformable material (e.g., PET) in sheet form is heated above its glass transition temperature and urged against a mold using traditional thermoforming techniques (using either a male or female mold, with or without the application of positive and/or negative pressure to urge portions of the sheet against portions of the mold). Such themoforming yields a tray-shaped container having a rounded rectangular shape overall and including a concave interior portion for receiving the cut of fish. The rounded rectangular overall shape of the container is defined by a deflectable flange that surrounds the interior portion about the entire perimeter of that interior portion. The deflectable flange has the configuration shown in FIG. **1**A, and the tray has the approximate shape of the tray shown in FIG. **6**D upon cutting the thermoformed tray from the sheet at peripheral edge **110** of the deflectable flange **160**. The die used to cut the tray from the sheet is heated so that the peripheral edge of the tray is at or near its glass transition temperature.

A plug having a shape that substantially fills the interior portion of the tray at the portions adjacent the extension **50** of the deflectable flange **160** is inserted into the interior portion (approximately as shown in FIG. **8**Dii). The plug-filled tray is then inserted into a ram **300** (approximately as shown in the upper position in FIG. **10**A, except that no plug

is present in FIG. **10**A), so that the peripheral edge **110**, the spacer **140**, or both contact the upper surface **302** of the ram **300** at substantially all portions of the deflectable flange. Downward pressure (referring to FIG. **10**A, the force being applied downwardly from the top of the image) is applied to the extension **50** of the deflectable flange **160** about the entire periphery of the interior, driving the spacer **140** and/or peripheral edge **110** portions of the deflectable flange **160** against the ram. The deflectable flange is driven against the ram to a position analogous to that shown in cross-section in FIG. **8**H, and the parts are held in this position for a period of time sufficient for at least the portion of the deflectable flange indicated by "B" in FIG. **8** J to attain a temperature above its glass transition temperature by virtue of heat conducted or radiated thereto from the ram. The deflectable flange is thereafter urged (by the force applied to the extension **50**) further against the ram so that the peripheral edge **110** slides, scrapes, or skips across the inner surface **302** of the ram **300** and the deflectable flange advances to approximately the position shown in FIG. **8**J. If desired, the deflectable flange can be further advanced to the position shown in FIG. **8**K, optionally upon pausing to permit additional portions of the deflectable flange to achieve a temperature above its glass transition point. Also, if desired, a coolant such as ambient air can be injected (e.g. at the position occupied by element **120** in FIG. **8**K) to reduce the temperature of the deflectable flange at the injection point, in order to prevent further irreversible deflection of such portion. The deflectable flange is urged against the ram sufficiently that the peripheral edge is not readily accessible to films or other materials present at the periphery of the tray.

The force urging the deflectable flange against the ram is discontinued, and the article is removed from contact with the ram, whereby the material of the deflectable flange cools below its glass transition temperature and retains its shape in the absence of applied force. At this point, a shaped article in the shape of the desired tray has been formed, the tray having a smooth periphery. The tray can be used immediately for packaging the cut of fish or, more typically, it can be stacked with other such trays and shipped to a fish processor.

Whether the tray is used immediately after formation or retrieved by de-nesting the tray from a stack of trays, the cut of fish can now be deposited within the interior compartment of the tray, together with any other materials (e.g., sauce, an absorbent pad, vegetable, or seasonings) to be packaged therewith in preparation for sealing. Any of a number of known sealing technologies can be used to seal the container and the fish.

The tray can simply be over-wrapped with a thin plastic film (the film extending across the opening of the compartment between extensions **50** on opposite sides of the compartment, around smoothly-bent bend region **150** and/or spacer **140** of the deflectable flange **160**), and the terminus of the film can be sealed to a portion of the film overlaying the tray, for example by application of a heated pad against the terminus and the portion, followed by heat-shrinking of the film to yield a visually pleasing taut film surface. Because the tray has no sharp or rough edges at its periphery, the overwrapped film is not torn during sealing, nor do such edges tear, snag, or abrade other sealed packages during shipping. The over-wrapped, fish-containing container can be packaged (e.g., in a box with other such containers or in a plastic bag containing both a selected gas or liquid phase and other such containers), and shipped to a wholesaler, retailer, or customer.

Rather than sealing the package using an over-wrap that is sealed to itself, the container can be sealed after filling with a film that does not envelop the tray, but instead seals the compartment at the extension **50** about the periphery of the compartment. Such a seal can be generated by simply sealing a film (using any one or combination of heat, pressure, and an adhesive) to the extension **50** and, preferably, trimming the film about the periphery of the seal (e.g., by trimming the film at approximately the peripheral extent of the container). If desired, any free ends of the film seal can be shrunk using heat. Prior to sealing, a vacuum can be applied to withdraw gases from the interior of the compartment and to draw the film against the contents of the compartment, and a selected gas or gas mixture can optionally be injected prior to sealing.

The disclosure of every patent, patent application, and publication cited herein is hereby incorporated herein by reference in its entirety.

While this subject matter has been disclosed with reference to specific embodiments, it is apparent that other embodiments and variations can be devised by others skilled in the art without departing from the true spirit and scope of the subject matter described herein. The appended claims include all such embodiments and equivalent variations.

What is claimed is:

1. A method of making a shaped article having a body with a smooth periphery, the method comprising

forming a thermoplastic into a shape comprising the body and a deflectable flange at a peripheral portion of the body, the deflectable flange comprising

an extension that extends peripherally away from the body and connects thereto

a bend region having a smooth contour and interconnecting the extension, at an approximately right angle, with a spacer that is connected with

a peripheral flange which bears a peripheral edge of the thermoplastic, the spacer and peropheral flange being connected, at an angle other than 180 degrees, at

an elbow;

impinging a ram against the peripheral flange to deflect the spacer toward the extension, whereby the magnitude of the angle between the spacer and the extension is decreased on account of at least one portion of the deflectable flange becoming bent, relative to its pre-impingement position, the bent portion being selected from the group consisting of the extension, the bend region, and the spacer;

heating the bent portion to at least the glass transition temperature of the thermoplastic; and

after impinging the ram against the peripheral flange and heating the bent portion to at least the glass transition temperature, further impinging the ram against the deflectable flange to further deflect the spacer toward the extension prior to

disengaging the ram from the deflectable flange, whereby the bent portion remains deflected from its pre-impingement position even upon discontinuation of the impingement to yield the body with a smooth periphery.

2. The method of claim **1**, wherein the bent portion is cooled below the glass transition temperature prior to disengaging the ram from the deflectable flange.

3. The method of claim **1**, wherein the bend region interconnects the spacer with the extension at an angle not less than 75 degrees, but less than 105 degrees.

4. The method of claim 1, wherein the bend region interconnects the spacer with the extension at an angle of about 87-93 degrees.

5. The method of claim 1, wherein the thermoplastic is formed into a shape comprising the body and having the deflectable flange about its entire periphery.

6. The method of claim 1, wherein the thermoplastic is formed into a shape comprising the body having a concave compartment with an opening and the deflectable flange about the entire periphery of the opening.

7. The method of claim 6, further comprising sealing the compartment using a film that contacts the smooth periphery of the body about the entire periphery of the opening.

8. The method of claim 7, wherein the compartment is sealed by over-wrapping the body with the film and sealing the film to itself to envelop the body.

9. The method of claim 7, wherein the compartment is sealed by applying the film across the opening of the compartment and sealing the film about the periphery of the opening.

10. The method of claim 9, wherein the film is thermoformable and is disposed in a softened state around the smooth periphery of the body and cooled below its softening temperature such that the film that must be stretched outwardly about the smooth periphery of the body in order to displace the film from the opening.

11. The method of claim 1, wherein the ram is impinged against the deflectable flange to deflect the peripheral edge away from the periphery of the shaped article sufficiently that a flexible film that tautly over-wraps the shaped article after cooling the bent portion does not contact the peripheral edge.

12. The method of claim 1, wherein the ram is impinged against the deflectable flange to deflect the peripheral edge sufficiently that the peripheral edge points at the body after cooling the bent portion.

13. The method of claim 1, wherein the ram is impinged against the deflectable flange to deflect the peripheral edge to a position at which a plane through the thermoplastic at the peripheral edge is offset from the plane of the extension by an angle of not less than 180 degrees after cooling the bent portion.

14. The method of claim 1, wherein the deflectable flange is deflected to differing degrees at selected portions of the ram, whereby the height of the deflected peripheral flange differs at peripheral portions corresponding to the selected portions after cooling the bent portion, yielding at least one portion useable as a stacking extension.

15. The method of claim 1, wherein the ram is impinged against the deflectable flange sufficiently to deflect the peripheral edge to a position at which the peripheral edge cannot be perceived by a person running a finger along the periphery of the shaped article after cooling the bent portion.

16. The method of claim 1, wherein the ram is urged against the peripheral flange by applying force to at least the extension in the direction of the ram, wherein the extension extends laterally in a plane about the entire periphery of the opening of a concave compartment in the body and wherein a plug that substantially fills the opening is inserted therein prior to urging the ram against the peripheral flange, whereby the plug inhibits inward displacement of the deflectable flange into the opening.

17. The method of claim 1, wherein the ram impinges against the peripheral flange at an upper face of the ram, the upper face having a contour that deflects inwardly toward the body, whereby greater impingement of the deflectable flange against the upper surface of the ram deflects the peripheral edge increasingly toward the body, and wherein the upper face is curved sufficiently that increasing impingement of the deflectable flange against the ram turns the peripheral edge at least about 180 degrees relative to its orientation prior to the impingement.

18. The method of claim 1, wherein sequential portions of the spacer are softened by impinging the sequential portions against the ram in a plurality of discrete, incremental advances.

19. The method of claim 1, wherein sequential portions of the spacer are softened by impinging the sequential portions against the ram in a single smooth motion.

20. The method of claim 1, wherein the elbow connects the peripheral flange to the spacer at an angle of from 60 to 120 degrees.

21. A method of forming a smooth periphery on a thermoformed article that is made from a thermoplastic and that has a sharp peripheral edge, the method comprising

forming a deflectable flange about the peripheral edge of the article,

the deflectable flange comprising

an extension that extends peripherally away from the article and connects thereto

a bend region having a smooth contour and interconnecting the extension, at an approximately right angle, with a spacer that is connected with

a peripheral flange which bears a peripheral edge of the thermoplastic, the spacer and peripheral flange being connected, at an angle other than 180 degrees, at an elbow;

impinging a ram against the peripheral flange to deflect the spacer toward the extension, whereby the magnitude of the angle between the spacer and the extension is decreased on account of at least one portion of the deflectable flange becoming bent, relative to its pre-impingement position, the bent portion being selected from the group consisting of the extension, the bend region, and the spacer;

heating the bent portion to at least the glass transition temperature of the thermoplastic;

after impinging the ram against the peripheral flange and heating the bent portion to at least the glass transition temperature, further impinging the ram against the deflectable flange to further deflect the spacer toward the extension prior to

cooling the bent portion below the glass transition temperature, whereby the bent portion remains deflected from its pre-impingement position even upon discontinuation of the impingement; and

disengaging the ram from the deflectable flange to yield the article with a smooth periphery.

* * * * *