July 9, 1963 B. EDWARDS 3,096,546

MACHINE AND METHOD FOR CURLING LIPS OF CONTAINER ARTICLES

Filed Aug. 19, 1958 2 Sheets-Sheet 1

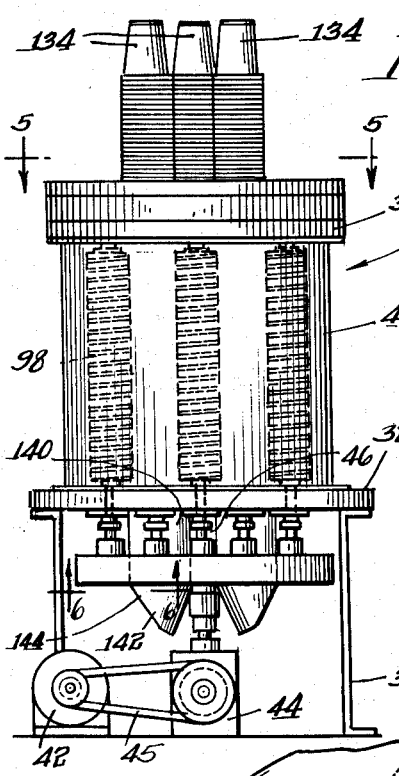

Fig. 1.

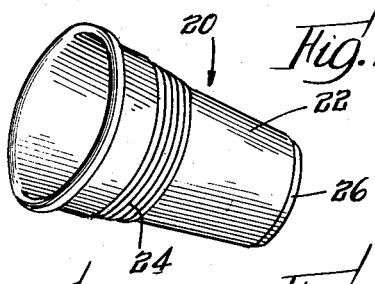

Fig. 2.

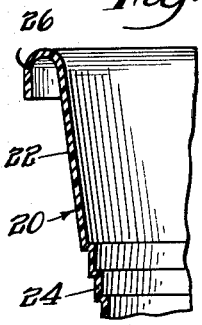

Fig. 3.

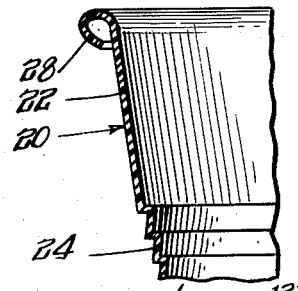

Fig. 4.

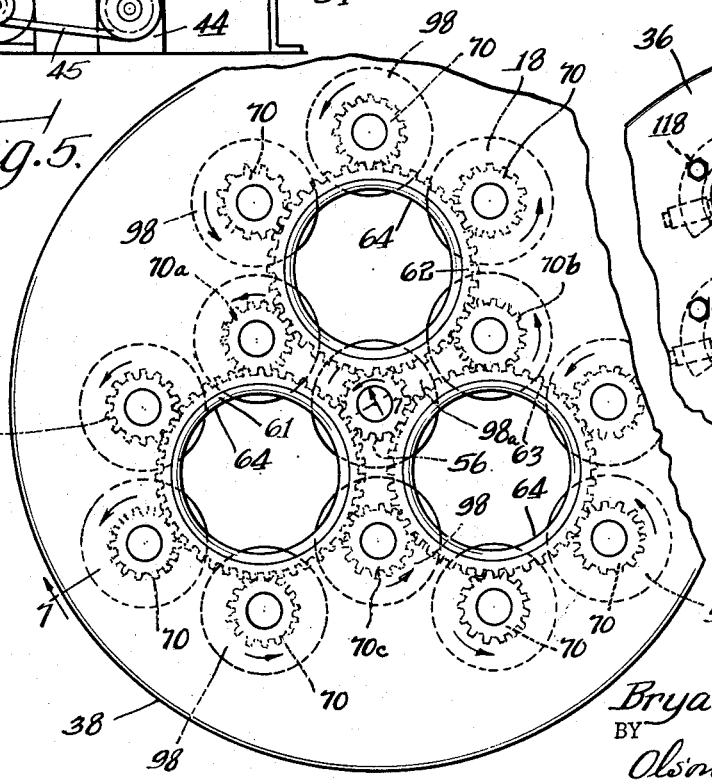

Fig. 5.

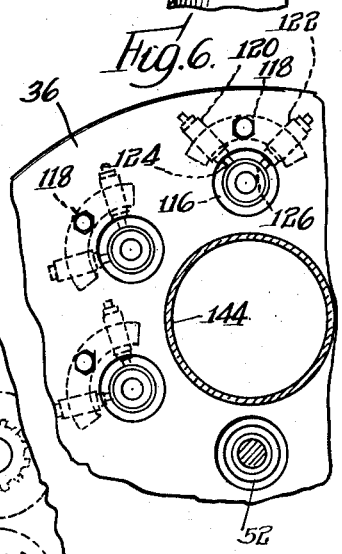

Fig. 6.

INVENTOR.
Bryant Edwards
BY
Olson & Trexler
attys.

July 9, 1963 B. EDWARDS 3,096,546

MACHINE AND METHOD FOR CURLING LIPS OF CONTAINER ARTICLES

Filed Aug. 19, 1958 2 Sheets-Sheet 2

Fig. 7.

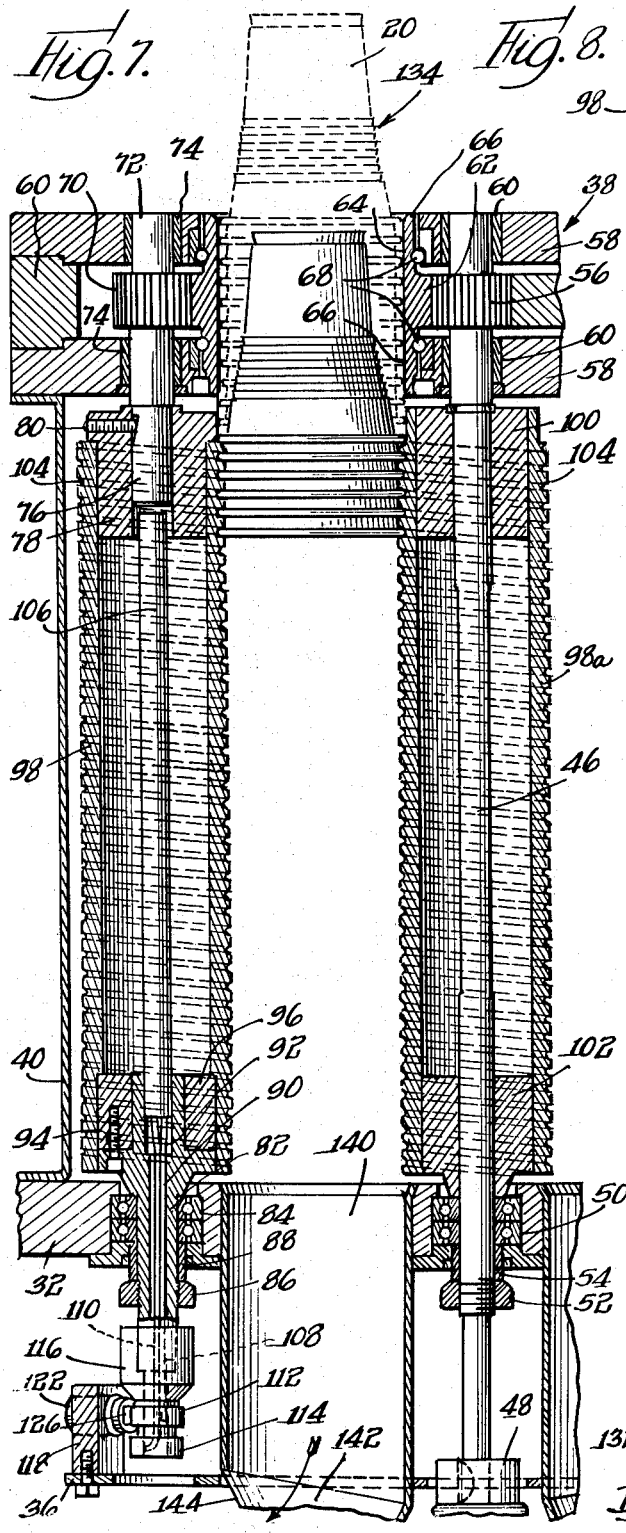

Fig. 8.

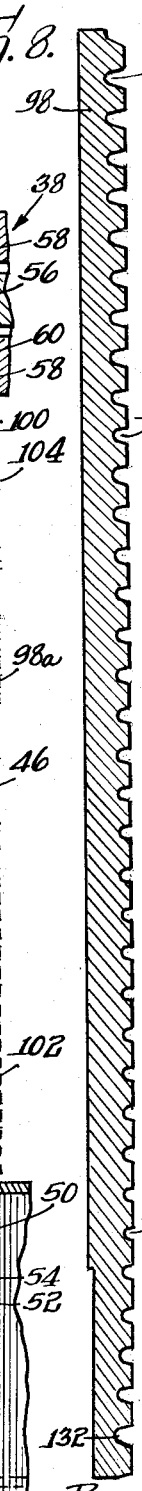

Fig. 9

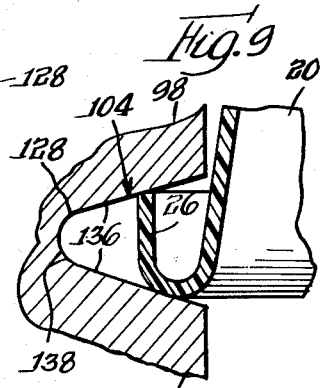

Fig. 10

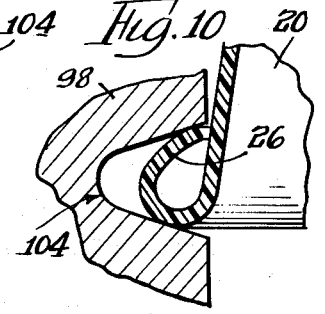

Fig. 11.

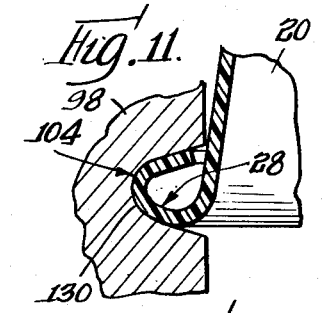

Fig. 12.

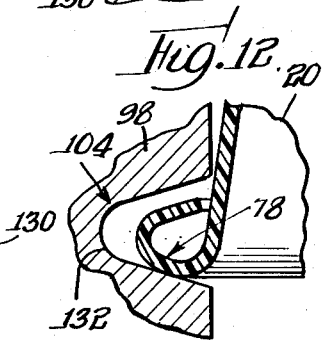

INVENTOR.
Bryant Edwards

By: Olson & Trexler attys

United States Patent Office

3,096,546

Patented July 9, 1963

1

3,096,546

MACHINE AND METHOD FOR CURLING LIPS OF CONTAINER ARTICLES

Bryant Edwards, Chicago, Ill., assignor to Illinois Tool Works Inc., a corporation of Delaware

Filed Aug. 19, 1958, Ser. No. 755,908
7 Claims. (Cl. 18—19)

This invention is concerned generally with the art of containers, and more particularly with an apparatus and method for curling over the lips of plastic cups or the like.

Cups made of plastic have many advantages over the well known paper cups. For one thing, they are moisture proof and do not become soggy with use, nor do they allow vapor to pass through the bottom and condense on a cold surface, such as frequently happens when coffee or other hot beverages are served in paper cups. Plastic cups are light in weight, and are quite strong. However, when the cup blanks are cut from sheet plastic as an incident to the formation of a cup, a certain amount of flash is likely to be left along the cut edge. This presents a sharp edge which is uncomfortable, and which could cut the lip or even the hand of a user. Even in the absence of extremely sharp edges, it is undesirable to have edges of sheet material exposed, as will be appreciated, even a sheet of paper can cut a finger, and exposed edges are always susceptible to physical damage.

The principal object of this invention is to provide an apparatus and method for folding under the edge of a plastic cup or other container to provide a rolled over lip with the edge (which might be sharp or rough) in an inaccessible position.

It is another object of this invention to provide an apparatus for and method of progressively folding under the lip of a plastic container such as a cup.

More specifically, it is an object of this invention to provide an apparatus for and method of progressively folding under the lips of a succession of cups of plastic or the like.

A further object of this invention is to provide a machine for progressively folding over the lips of a plurality of stacks of plastic cups, wherein certain of the parts of the machine act simultaneously on the cups of more than one stack.

Yet another object of this invention is to provide a machine for folding over the lips of plastic cups and the like, which machine is compact and occupies an extraordinarily small amount of floor space for the production capacity thereof.

FIG. 1 is an elevational view of a machine constructed in accordance with the principles of this invention;

FIG. 2 is a perspective view of a plastic cup to be acted on in the machine;

FIG. 3 is a fragmentary longitudinal sectional view taken through the rim of the cup and showing the rim or lip before it is folded over;

FIG. 4 is a view similar to FIG. 3 showing the rim or lip after folding over thereof;

FIG. 5 is a horizontal view partially in section as taken along the line 5—5 in FIG. 1;

FIG. 6 is an upward horizontal view as taken substantially along the line 6—6 in FIG. 1;

FIG. 7 is a vertical sectional view through one of the cup lip forming stations as taken substantially along the line 7—7 in FIG. 5;

FIG. 8 is an enlarged longitudinal sectional view through one of the lip forming rollers; and

FIGS. 9–12 are successive sectional views on a greatly enlarged scale showing the progression of the cup along the roller and the progressive forming of the lip thereof.

Referring now in greater particularity to the drawings,

2

and first to FIGS. 2–4, there will be seen a cup **20** made of thermoplastic sheet material. Although the particular material is not critical insofar as this invention is concerned, it has been found that modified polystyrene is entirely satisfactory. The cup **20** has a tapered sidewall **22** with an intermediate section of rings or ribs **24** imparting rigidity to the sidewall and reducing heat transferred to the fingers when a hot beverage is served in the cup. The sidewall preferably is provided with a stepped portion **26** at the base thereof, for improved nesting of a stack of cups. A sidewall is terminated at the top by a folded over, depending rim **26** as shown in FIG. 3. It will be seen that the lower edge of this rim is in an exposed position where it could be engaged by the fingers of a user. Occasionally, a sharp edge or flash is produced along the bottom edge of the rim. Any possibility of discomfort or danger from such flash is avoided, as shown in FIG. 4, by curling or rolling over the rim to provide a lip **28**. It will be appreciated that the lip **28** is more rigid than the rim **26**, for a given amount of material, as it approaches a tubular configuration.

A machine for curling over the rims **26** to form the lips **28** is shown in general in FIG. 1, being identified by the numeral **30**. The machine includes a platform **32** supported on uprights or legs **34** with a base plate **36** supported from the uprights **34** at a position below the platform **32**. A gear case **38** is held spaced a substantial distance above the platform **32** by a sheet metal drum or casing **40**. A motor **42** is positioned below the base plate **36**, and drives a speed reducer **44** by means of a belt **45**. The speed reducer drives a shaft **46** extending up through the base plate **36**, the platform **32**, and into the gear case **38**.

As may be seen in FIG. 7, the shaft **46** is connected to the speed reducer by a coupling **48**, and the shaft near the lower end thereof is journaled in a ball bearing structure **50** in the platform **32**. A nut **52** is threaded on the shaft **46** below the bearings and below a spacer sleeve **54** for vertical positioning of the shaft. At the upper end of the shaft, there is provided a spur gear **56**. This gear is positioned within the gear case **38**, the gear case comprising a pair of horizontally disposed, vertically spaced plates **58** spaced apart by a suitable spacer **60**. The shaft **46** is journaled in suitable sleeve bearings **60** received in the plates **58**.

As will be seen in FIGS. 5 and 7, the spur gear **56** meshes with and drives three planet gears **61**, **62** and **63**. The planet gears are not like ordinary planetary gears in that they do not orbit about the gear **56**. However, they are positioned as planet gears. The planet gears are hollow, being provided with relatively large axial bores **64**. The planet gears have hollow hubs **66** extending in opposite directions therefrom, and these hubs are mounted by means of suitable ball bearings **68** in apertures in the plates **58**.

A plurality of gears **70** is spaced circumferentially about each of the planet gears **61**, **62** and **63**. In the illustrative example, there are six of such arcuately spaced gears **70** about each planet gear, and certain of these gears are common to two of the planet gears. Thus, the gear indicated as **70*a*** meshes with planet gears **61** and **62**, the gear indicated as **70*b*** meshes with planet gears **62** and **63**, and the gear indicated as **70*c*** meshes with planet gears **63** and **61**. As will be seen in FIG. 7, each of the gears **70** is mounted on a stub shaft **72** mounted in sleeve bearings **74** in the plates **58** of the gear case **38**. Each of the stub shafts **72** has a depending extension **76** received in a plug **78** secured thereto by a set screw **80**. A stub shaft **82** is mounted in alignment with each of the stub shafts **72** and is supported by ball bearings **84** in the platform **32**. Each of such stub shafts, like the shaft **46**, has a nut **86** threaded thereon and bearing up against a spacer **88** below the ball

bearings 84. The stub shafts 82 are hollow, having axial bores 90 enlarged at the upper ends as at 92. Each of these stub shafts is provided with a circumferential flange 94 of considerable extent supporting a cylindrical collar 96 thereon.

An elongated cylindrical roller 98 is placed over each plug 78 and the aligned flange 94 and cylinder 96, one of the rollers being placed on plugs 100 and 102 on the shaft 46. Each of the rollers 98 is provided with an external groove or depressed screw thread 104 running from top to bottom thereof. The center roller 98*a* preferably has a triple lead screw thread for proper cooperation with the three sets of outer rollers, but could be threadless and simply serve as a bearing roller or "key post." The character of this screw thread will be described shortly. The spacing of the rollers 98 and the diameters thereof are such that the confronting portions of any group of rollers are spaced somewhat more closely than the diameter of the bore 64 of the corresponding planet gear, as clearly may be seen in FIGS. 5 and 7.

Each of the rollers 98, except for the center roller 98*a* mounted on the shaft 46, is provided with a heating element 106. The heating element is of a suitable electric type, positioned at its opposite ends in the bore of the plug 78 and the enlarged bore 92 of the stub shaft 82. The lead wires 108 and 110 of the electric heating element 106 extend through the axial bore 90 of the stub shaft 82 and are connected to slip rings 112 and 114 on an insulating fitting 116 at the bottom of the stub shaft.

As will be seen in FIGS. 6 and 7, the base plate 36 is provided with a plurality of arcuate brackets 118 and positioned adjacent the various fittings 116, and coaxial therewith. Each of the brackets 118 carries a pair of arcuately and vertically spaced brush holders 120 and 122 respectively carrying brushes 124 and 126 engageable with the slip rings 114 and 112, respectively, to supply power to the heating elements 106. It will be observed that the roller 98 on the shaft 46 is not provided with a heating element. Due to the central location of the roller mounted on the shaft 46, this roller is heated sufficiently by radiation, etc. from the remaining heated rollers.

The nature of the screw thread or groove 104 is shown in detail in FIG. 8, and also in the sequence views of FIGS. 9–12. More particularly, the thread comprises a generally V-shaped groove having a maximum depth at the upper end of the roller, as indicated at 128 in FIG. 8, tapering uniformly to a minimum depth at 130 near the bottom of the roller, and again deepening to a lesser maximum at 132 at the bottom of the roller.

A stack 134 of cups 20 is placed in inverted position through the axial opening 64 of each planet gear 61, 62 and 63 with the rims 26 thereof coming into engagement with the threads or grooves 104 at the tops of the surrounding rollers 98. The groove 104 is V-shaped throughout, having diverging sidewalls 136 and an arcuate root 138. The relative angle of the sidewalls 136 remains constant, and hence with the decreasing depth of the groove, the sidewalls at the outer surface of the roller approach one another more closely until the position of minimum depth 130 is reached. Hence, with the stack of cups 134 inserted in inverted position, the rim 26 of a cup projects into the V-grooves of the surrounding rollers as shown in FIG. 9. The rim 26 is substantially entirely within the V-grooves with the normally depending flanges thereof in upright position. The rollers are provided with a right hand thread, and rotate in a counter-clockwise direction as viewed from above. Hence, the cups are lowered by the rollers to bring the rims first to the position shown in FIG. 10, wherein the sidewalls 136 are closer together adjacent the outer surface of the roller, and hence fold over the rim 26 in the manner shown, such folding over being progressive due to the progressive decrease in depth of the groove. As heretofore noted, the cups are made of a thermoplastic material, and the heating of the rollers by the electric heating elements causes the deformation of the rims to be permanent and without damage to the rims. Subsequently, as the cups continue to descend, the rim of the exemplary cup is folded over tightly to form the lip 28 as shown in FIG. 11, the lip 28 conforming very closely to the shape of the V-groove at this position. Subsequently, as the cup continues to descend the lip is freed by the V-groove, due to the increasing depth thereof toward the bottom of the roller.

Eventually, each cup passes from the rollers and drops into a tube 140 aligned with the stack, and having an offset lower end portion 142 open at the outside as indicated at 144, whereby the cups are dropped outwardly away from the centrally located speed reducer 44, as indicated by the arrow in FIG. 7. As will be appreciated, the cups can simply be dropped into a container for collection, or can be deposited in or on any sort of suitable conveyor apparatus, or can be deposited directly into cartons or containers.

As will be appreciated, the cups are rotated by the rollers, whereby the rim is continuously treated all of the way around. Since each of the roller grooves is cut on a spiral, and the cup is held in vertical position by engagement with the spirals of several rollers, each groove presents an angle relative to the rim or lip of the cup. If the cup is run through so that the trailing edge of the groove tends to peel the rim or lip outward, the lip is not properly folded under. The trailing edge of the groove must press the lip in, and hence for the right hand thread and counter-clockwise rotation when viewed from above, the cups must be fed through in inverted position.

The screw pitch of the grooves in the rollers is a function of the stack height of the cups in order that the cups will not be jammed together. In fact, the rollers preferably pull the cups slightly apart during the folding over or curling operation. For example, with a stack height or separation between the upper extremities of adjacent cups of one quarter inch, the screw pitch for the rollers is 5/16 inch. In general, it has been found that one sixteenth inch differential is sufficient for slightly separating the cups as they are fed through the machine. The end result is that the cups are dropped into shipping containers in a loosely stacked condition which is ideal for dispensing of the cups from a vending machine.

In the operation of the machine, a stack of seventy-five to one hundred cups is placed in an inverted position at each of the inlet stations. Hence, three stacks of cups are so placed. The cups may be placed by hand, or by automatic mechanism which does not form a part of this invention. One machine constructed in accordance with the principles of this invention operates the rollers at three hundred revolutions per minute. Hence, with the triple unit illustrated, there is a continuous output of nine hundred cups per minute. Hence, the machine has a very high production rate, and as will be seen from the drawings, occupies a minimum of floor space.

Although the invention has been described specifically with regard to turned down rims on plastic cups, it will be understood that the invention is generally applicable to sheet material containers having exposed circular edges.

It is to be understood that the specific embodiment of the invention as herein shown and described is for illustrative purposes only. Various changes in structure will no doubt occur to those skilled in the art, and are to be understood as forming a part of this invention insofar as they fall within the spirit and scope of the appended claims.

The invention is claimed as follows:

1. A method of forming a rolled-under lip on a plastic cup or the like of the type having a sidewall terminating in an outwardly and downwardly projecting circumferential rim, which method is characterized by the steps of: holding a plurality of said cups in a nested stack; slightly de-nesting said cups in sequence to allow free relative rotation thereof while simultaneously engaging the rim of each individual cup on the top and bottom

portions thereof at a plurality of spaced positions; and progressively bringing the engaged portions together in order to deflect said bottom portion toward said top portion and toward said sidewall.

2. A method of forming a rolled-under lip on a plastic cup or the like of the type having a sidewall terminating in an outwardly and downwardly projecting circumferential rim, which method is characterized by the steps of: holding a plurality of said cups in a nested stack; feeding said cups with the cups opening into the direction of feed; engaging the rim of each individual cup on the top and bottom portions thereof at a plurality of spaced positions; and progressively bringing the engaged portions together in order to deflect said bottom portion toward said top portion and toward said sidewall.

3. A method of forming a rolled-under lip on a plastic cup or the like of the type having a sidewall terminating in an outwardly and downwardly projecting circumferential rim, which method is characterized by the steps of: holding a plurality of said cups in a nested stack; feeding said cups with the cups opening into the direction of feed; slightly de-nesting said cups in sequence to allow free relative rotation thereof while simultaneously engaging the rim of each individual cup on the top and bottom portions thereof at a plurality of equally arcuately spaced positions; progressively bringing the engaged portions together in order to deflect said bottom portion toward said top portion and toward said sidewall; and heating said rim during the deflection thereof.

4. Apparatus for forming a rolled-under lip on a plastic cup or the like of the type having a sidewall terminating in an outwardly and downwardly projecting circumferential rim, said apparatus comprising: camming means for engaging said rim at a plurality of equally arcuately spaced positions, said means including a plurality of rollers, each of said rollers carrying a spiral groove which receives said rim, said grooves having a gradually diminshing and subsequently gradually increasing depth and height; and drive means operating said camming means, whereby said rim is progressively deflected toward said sidewall.

5. Apparatus for forming a rolled-under lip on a plastic cup or the like of the type having a sidewall terminating in an outwardly and downwardly projecting circumferential rim, said apparatus comprising: camming means for engaging said rim at a plurality of equally arcuately spaced positions, said means including a plurality of elongated, right cylindrical rollers having their axes parallel and disposed on the circumference of a circle, each of said rollers carrying a spiral groove which receives said rim; and drive means operating said camming means, including a central drive gear, a plurality of gears arranged to engage said drive gear in planet positions, and a plurality of roller gears meshing with and being circumferentially disposed about each of said planet gears, said roller gears being secured coaxially to said rollers and said planet gears having axial bores therethrough for passing cups into position relative to said rollers, whereby said rim is progressively deflected toward said sidewall.

6. Apparatus for forming a rolled-under lip on a plastic cup or the like of the type having a sidewall terminating in an outwardly and downwardly projecting circumferential rim, said apparatus comprising: camming means for engaging said rim at a plurality of equally arcuately spaced positions, said means including a plurality of elongated, right cylindrical rollers having their axes parallel and disposed on the circumference of a circle, each of said rollers carrying a spiral groove which receives said rim, said grooves being outwardly flared and having a gradually diminishing and subsequently gradually increasing depth and height said grooves further having a predetermined hand for feeding a plurality of said cups and having a lead which slightly de-nests a nested stack of said cups while they are being fed; and drive means operating said camming means, including a central drive gear, a plurality of gears arranged to engage said drive gear in planet positions, and a plurality of roller gears meshing with and being circumferentially disposed about each of said planet gears, said roller gears being secured coaxially to said rollers and said planet gears having axial bores therethrough for passing cups into position relative to said rollers, whereby said rim is progressively deflected toward said sidewall as said cup is made to revolve about its own axis while being fed through said rollers.

7. Apparatus for forming a rolled-under lip on a plastic cup or the like of the type having a sidewall terminating in an outwardly and downwardly projecting circumferential rim, said apparatus comprising: camming means for engaging said rim at a plurality of equally arcuately spaced positions, said means including more than two elongated, right cylindrical rollers having their axes parallel and disposed on the circumference of a circle, each of said rollers carrying a spiral groove which receives said rim, said grooves being outwardly flared and having a gradually diminishing and subsequently gradually increasing depth and height, said grooves further having a predetermined hand for feeding a plurality of said cups and having a lead which slightly de-nests a nested stack of said cups while they are being fed; means for heating selected rollers; and drive means for said camming means, including a central drive gear, a plurality of gears arranged to engage said drive gear in planet positions, and a plurality of roller gears meshing with and being circumferentially disposed about each of said planet gears, said roller gears being secured coaxially to said rollers, said planet gears having axial bores therethrough for passing cups into position relative to said rollers, whereby said rim is progressively deflected toward said sidewall as said cup is made to revolve about its own axis while being fed through said rollers.

References Cited in the file of this patent

UNITED STATES PATENTS

1,433,696	Cameron	Oct. 31, 1922
1,525,528	Widell	Feb. 10, 1925
1,545,177	Widell	July 7, 1925
2,274,827	Emmerich	Mar. 3, 1942
2,532,844	Hulbert et al.	Dec. 5, 1950
2,611,412	Moser	Sept. 23, 1952