US 20050210390A1

(19) United States

(12) Patent Application Publication

(10) Pub. No.: US 2005/0210390 A1

(43) Pub. Date: Sep. 22, 2005

Ono

(54) IMAGE DISPLAY APPARATUS, IMAGE DISPLAY SYSTEM, AND IMAGE DISPLAY METHOD

(75) Inventor: **Munenori Ono**, Kanagawa (JP)

Correspondence Address:
OBLON, SPIVAK, MCCLELLAND, MAIER & NEUSTADT, P.C.
1940 DUKE STREET
ALEXANDRIA, VA 22314 (US)

(73) Assignee: **SONY CORPORATION**, Tokyo (JP)

(21) Appl. No.: **11/054,408**

(22) Filed: **Feb. 10, 2005**

(30) **Foreign Application Priority Data**

Mar. 4, 2004 (JP) 2004-061422
Nov. 26, 2004 (JP) 2004-342367

Publication Classification

(51) **Int. Cl.**[7] **G06F 17/00**
(52) **U.S. Cl.** **715/730**

(57) **ABSTRACT**

An image display apparatus includes a memory for holding in advance, of the one or more information terminal apparatuses connected via a network, information of information terminal apparatuses whose connection to the network is desired, a controller for reading out the information of the information terminal apparatuses stored in the memory, and display section for displaying a list of the information of the information terminal apparatuses. In this case, the image display apparatus further includes selector for selecting one information terminal apparatus from the list displayed on the display section, it is able to change the connection of the information terminal apparatus to desired information terminal apparatus by manipulation of the selector on a display screen.

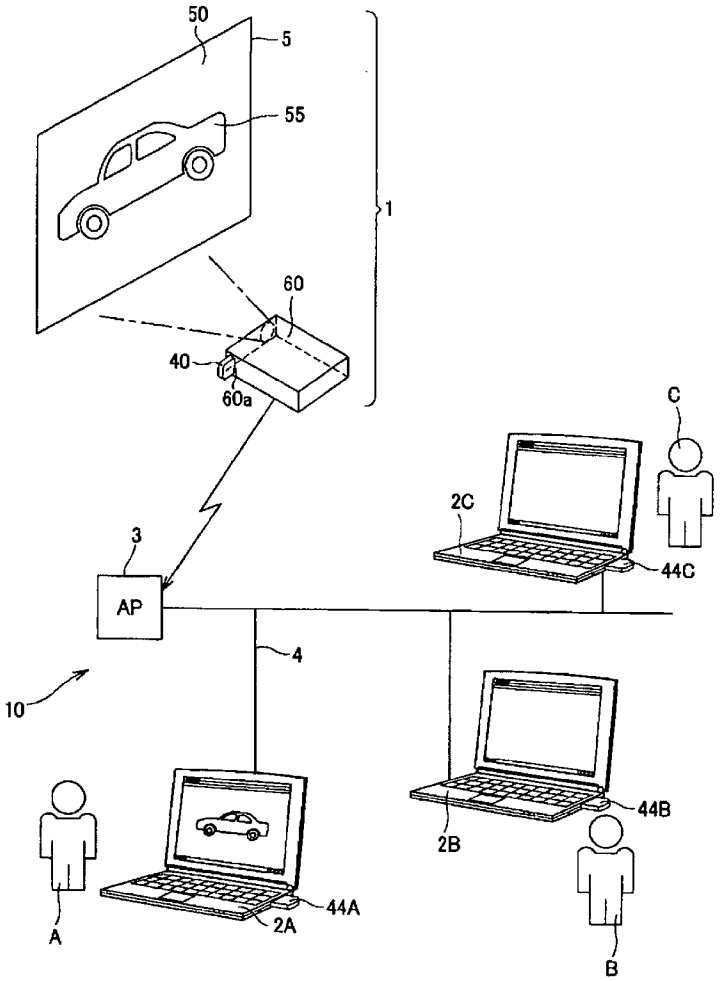

YEALINK EX. 1005

FIG. 1

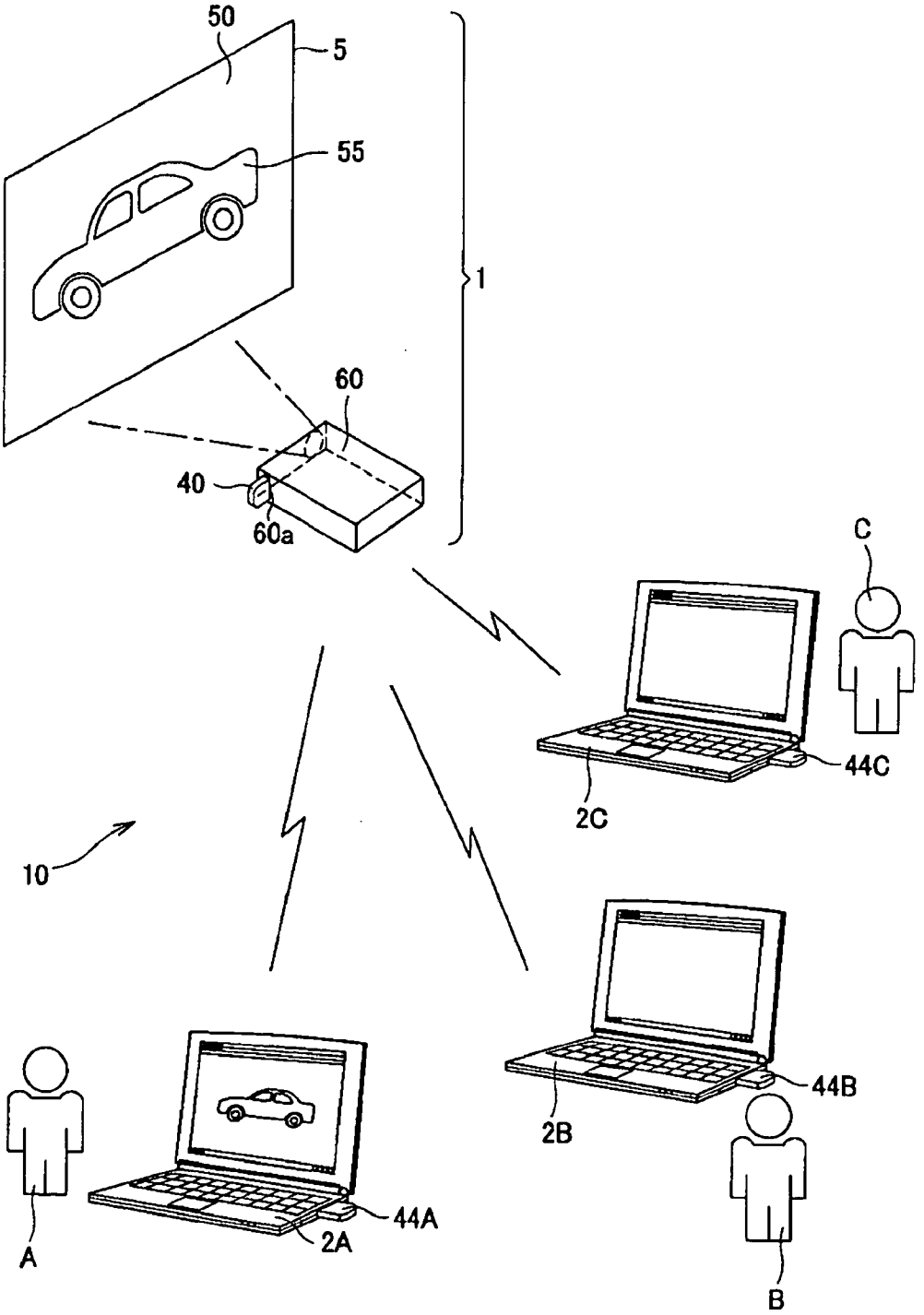

FIG. 2

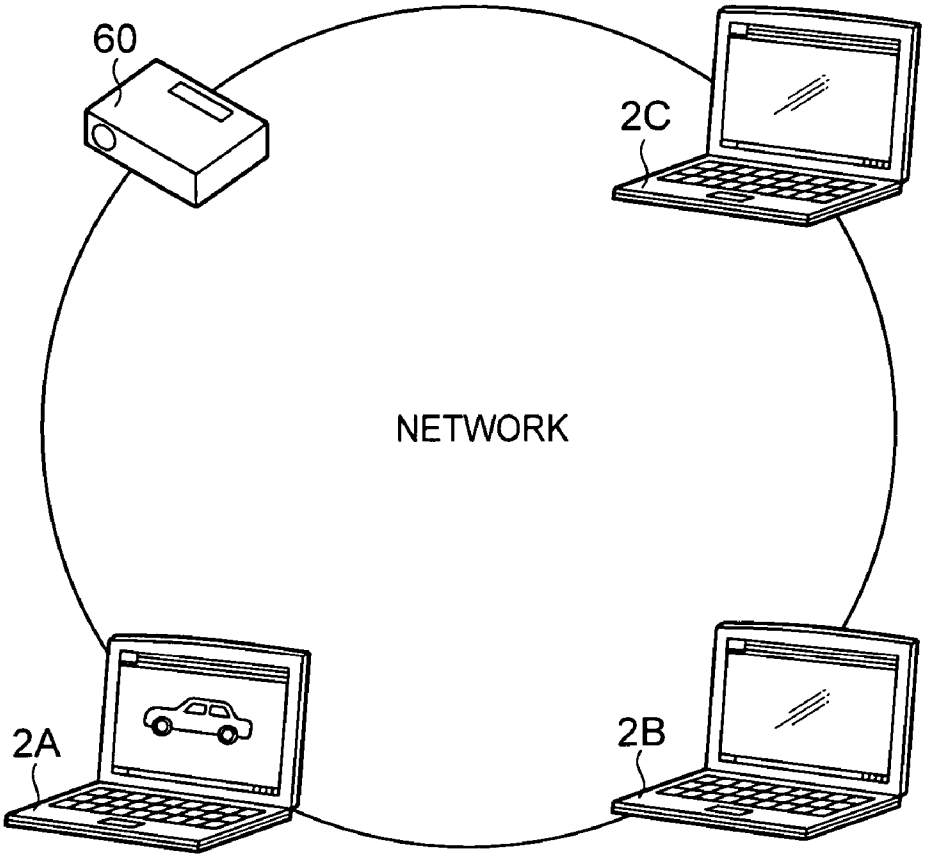

FIG. 3

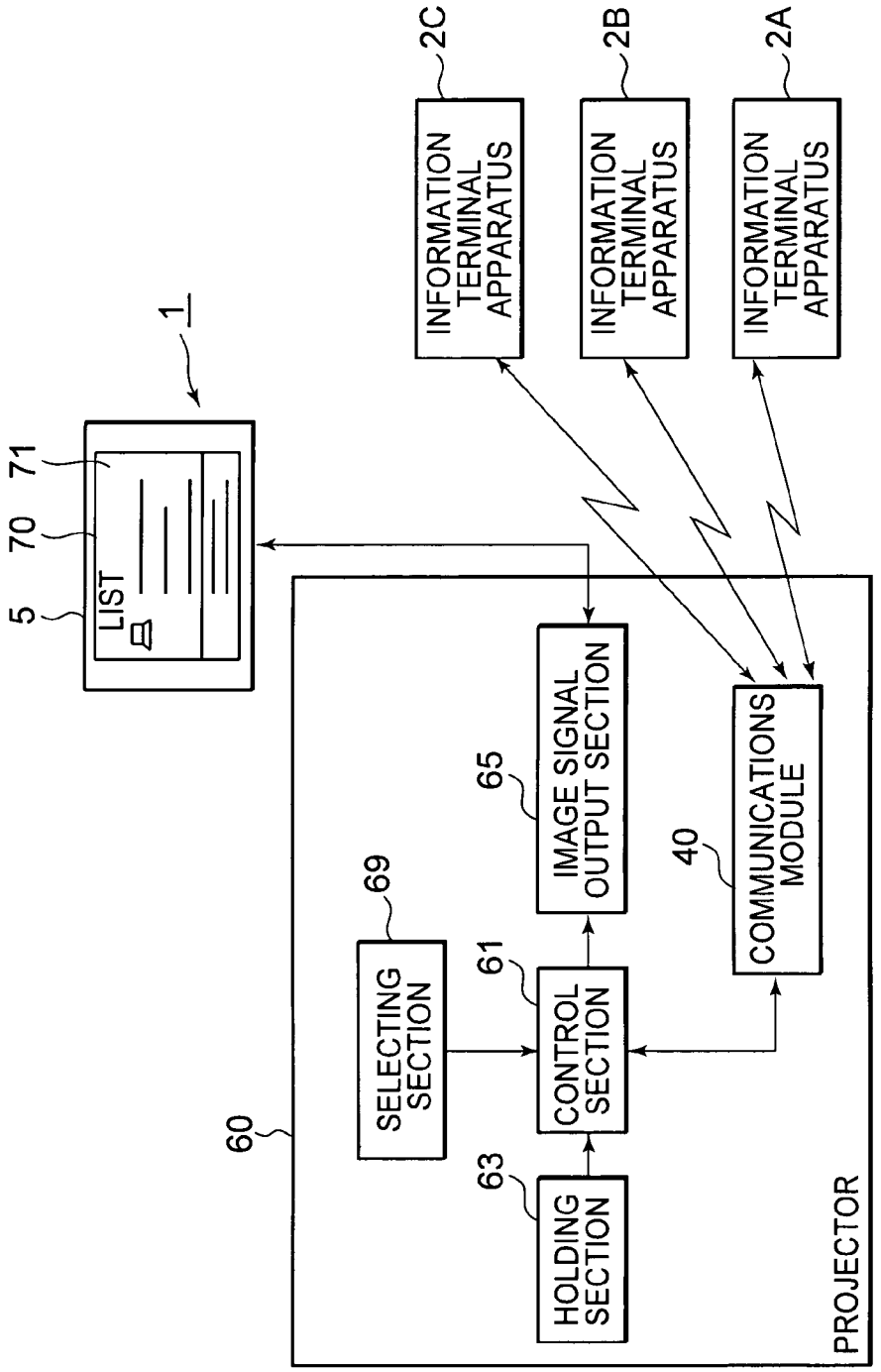
1
5
70
71
LIST
60
PROJECTOR
63
HOLDING SECTION
61
CONTROL SECTION
69
SELECTING SECTION
65
IMAGE SIGNAL OUTPUT SECTION
40
COMMUNICATIONS MODULE
2A
INFORMATION TERMINAL APPARATUS
2B
INFORMATION TERMINAL APPARATUS
2C
INFORMATION TERMINAL APPARATUS

FIG. 4

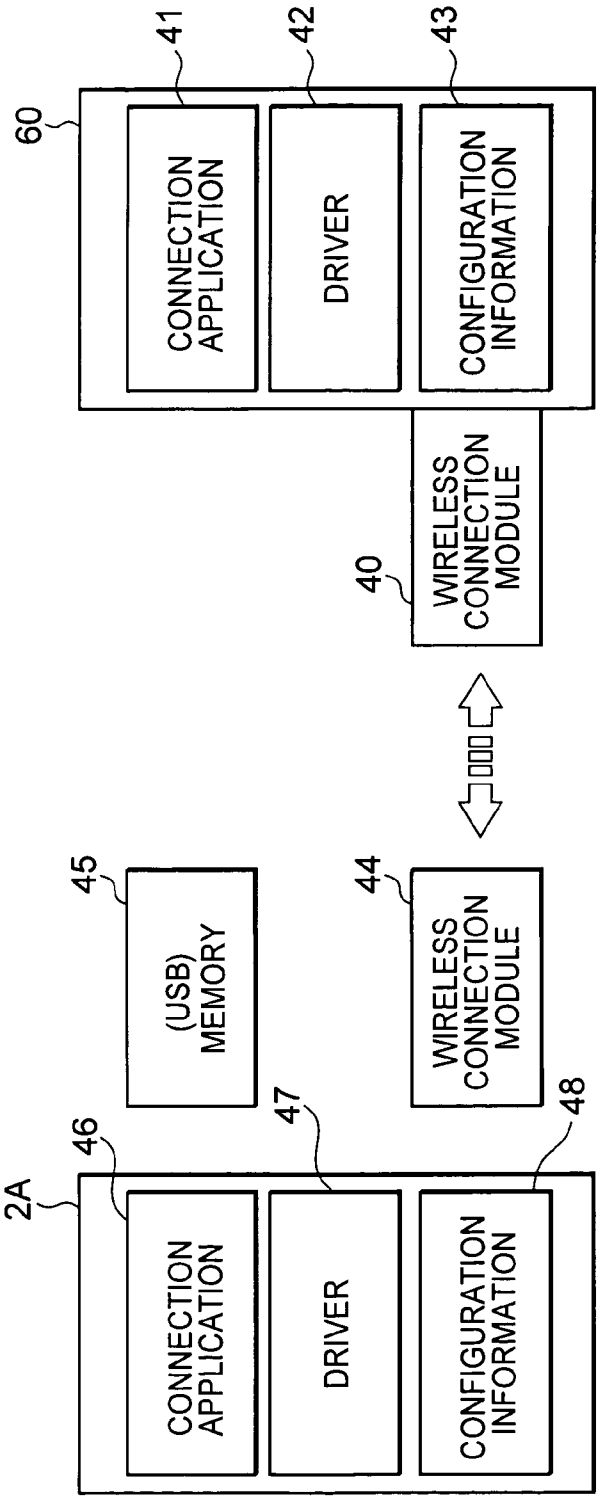
60
41
CONNECTION APPLICATION
42
DRIVER
43
CONFIGURATION INFORMATION
40
WIRELESS CONNECTION MODULE
45
(USB) MEMORY
44
WIRELESS CONNECTION MODULE
2A
46
CONNECTION APPLICATION
47
DRIVER
48
CONFIGURATION INFORMATION

FIG. 5

7	8
NETWORK MODE	AD HOC MODE
NETWORK NAME (SSID)	PJ-005
NETWORK CHANNEL	11
DATA ENCRYPTION (WEP)	382654·····
IP ADDRESS	AUTO IP (DHCP)
SUBNET MASK	255.255.0.0

FIG. 6

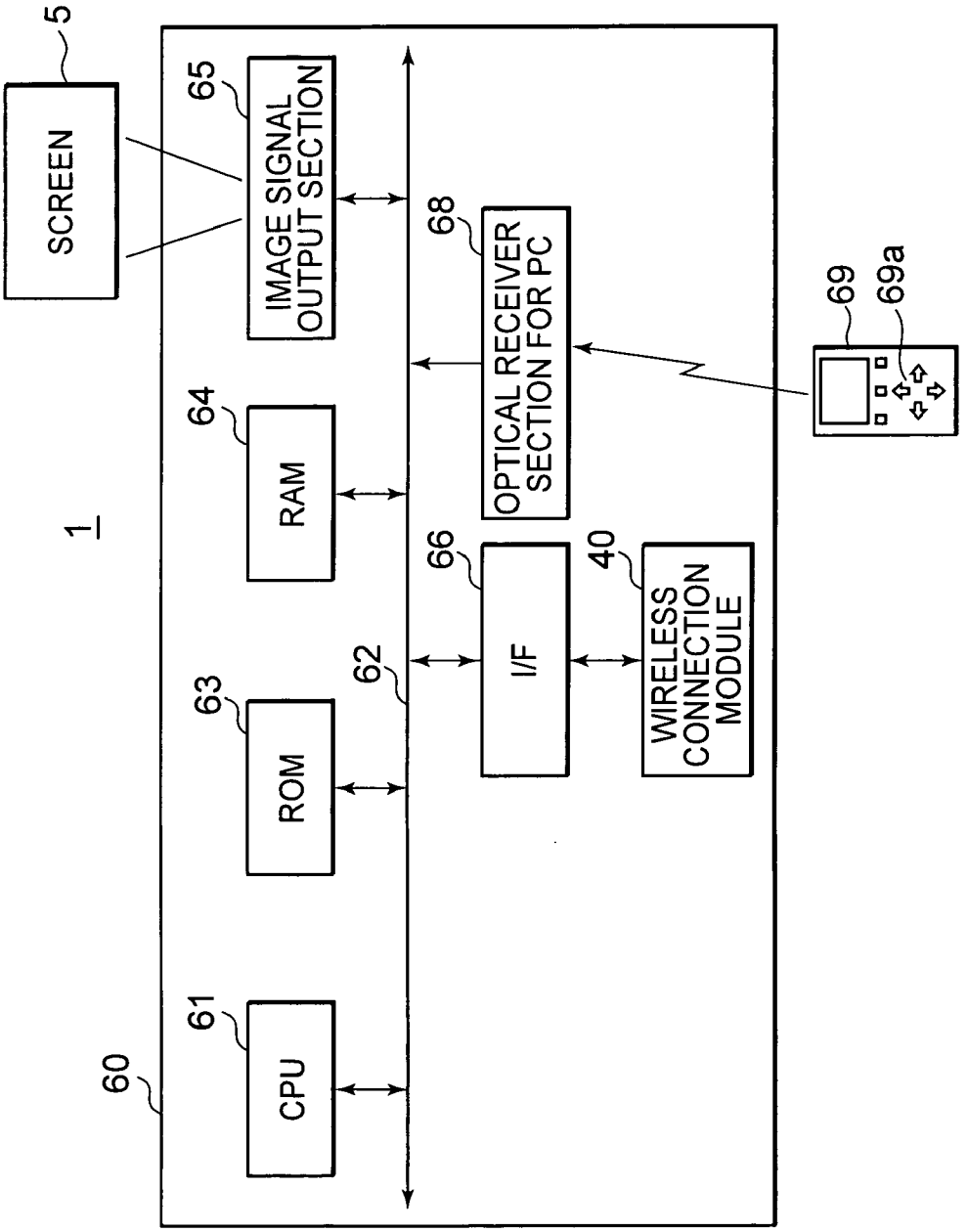
1
5
SCREEN
60
61
CPU
63
ROM
64
RAM
65
IMAGE SIGNAL OUTPUT SECTION
62
66
I/F
68
OPTICAL RECEIVER SECTION FOR PC
40
WIRELESS CONNECTION MODULE
69
69a

FIG. 7

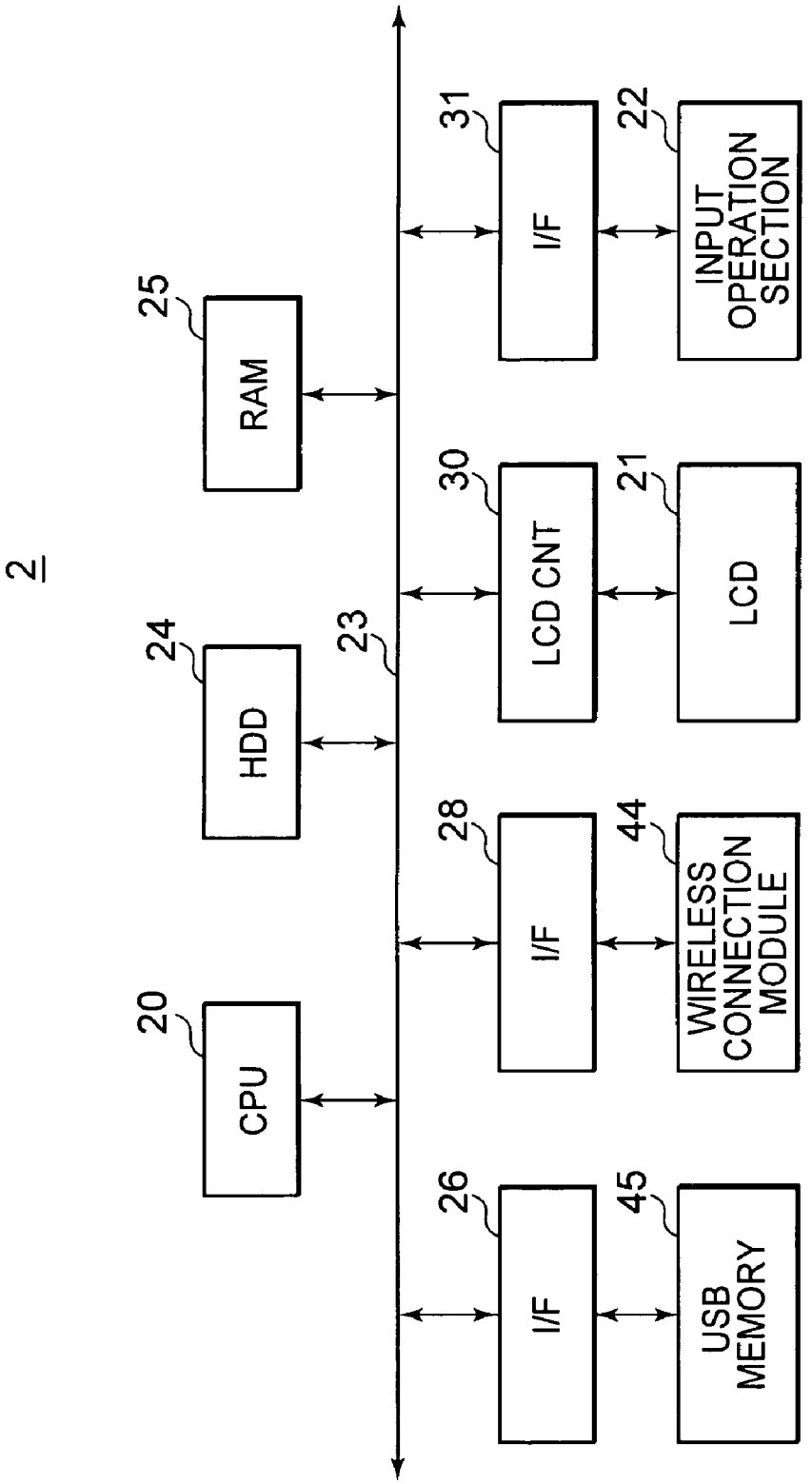
2
20
CPU
24
HDD
25
RAM
23
26
I/F
28
I/F
30
LCD CNT
31
I/F
45
USB MEMORY
44
WIRELESS CONNECTION MODULE
21
LCD
22
INPUT OPERATION SECTION

FIG. 8

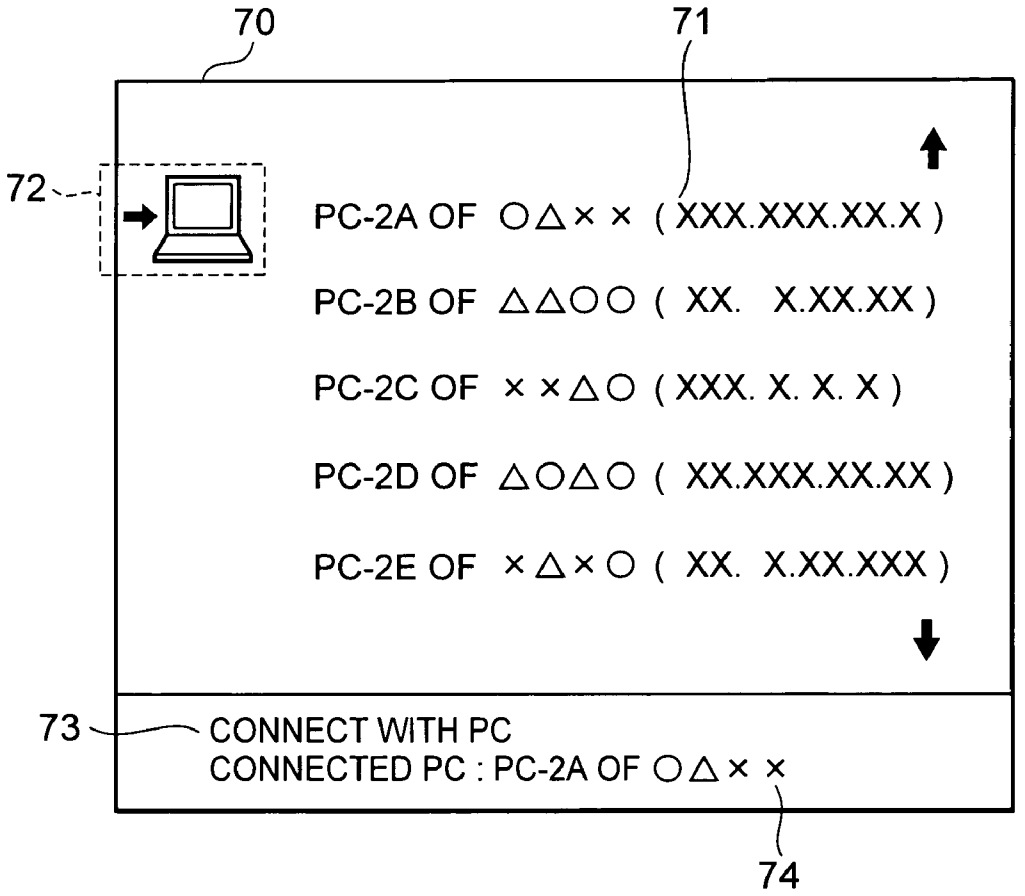
70
71
72
PC-2A OF ○△××（XXX.XXX.XX.X）
PC-2B OF △△○○（XX. X.XX.XX）
PC-2C OF ××△○（XXX. X. X. X）
PC-2D OF △○△○（XX.XXX.XX.XX）
PC-2E OF ×△×○（XX. X.XX.XXX）
73
CONNECT WITH PC
CONNECTED PC : PC-2A OF ○△××
74

FIG. 9

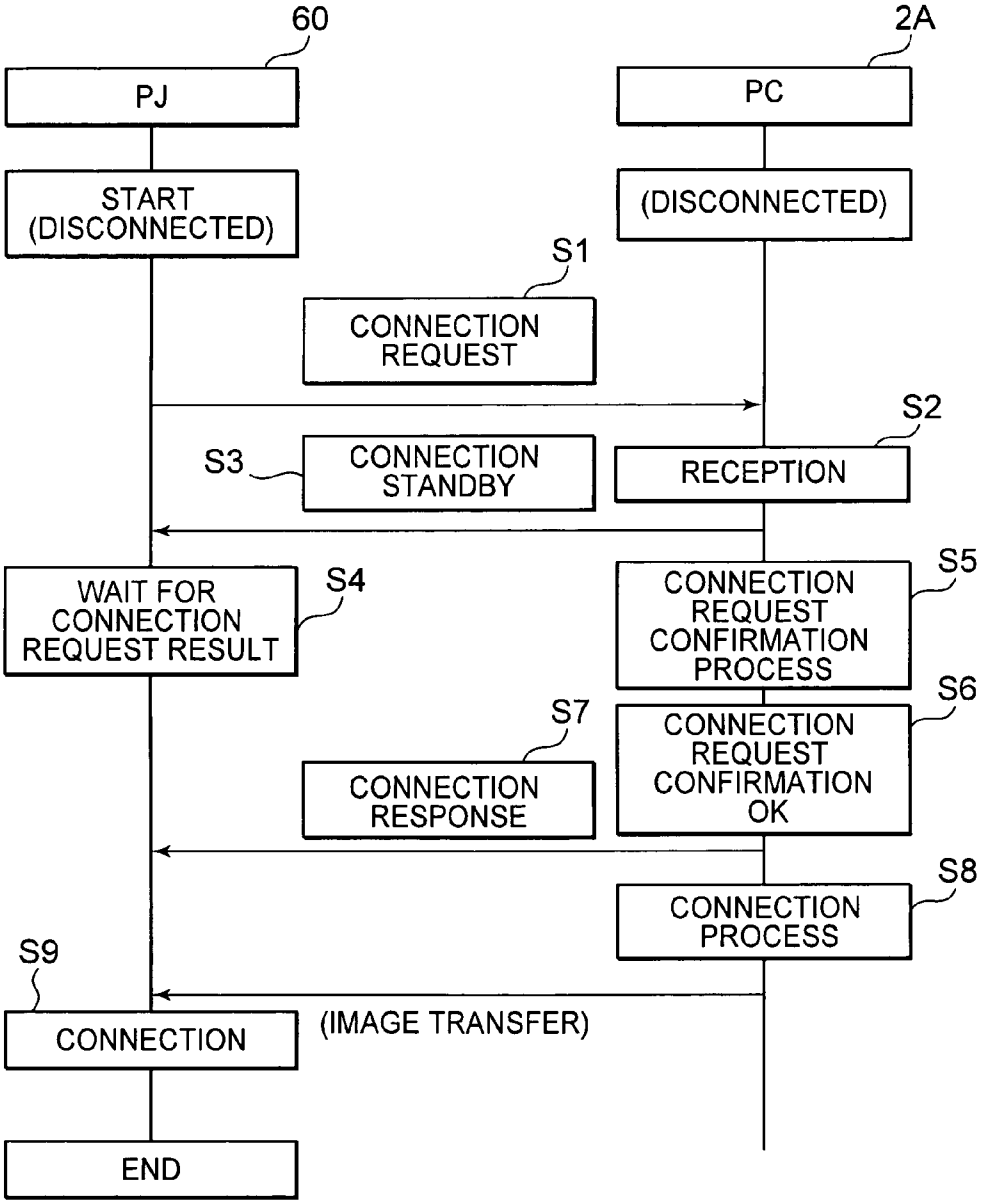
60
2A
PJ
PC
START (DISCONNECTED)
(DISCONNECTED)
S1
CONNECTION REQUEST
S2
S3
CONNECTION STANDBY
RECEPTION
S5
WAIT FOR CONNECTION REQUEST RESULT
S4
CONNECTION REQUEST CONFIRMATION PROCESS
S6
S7
CONNECTION REQUEST CONFIRMATION OK
CONNECTION RESPONSE
S8
CONNECTION PROCESS
S9
CONNECTION
(IMAGE TRANSFER)
END

FIG. 10

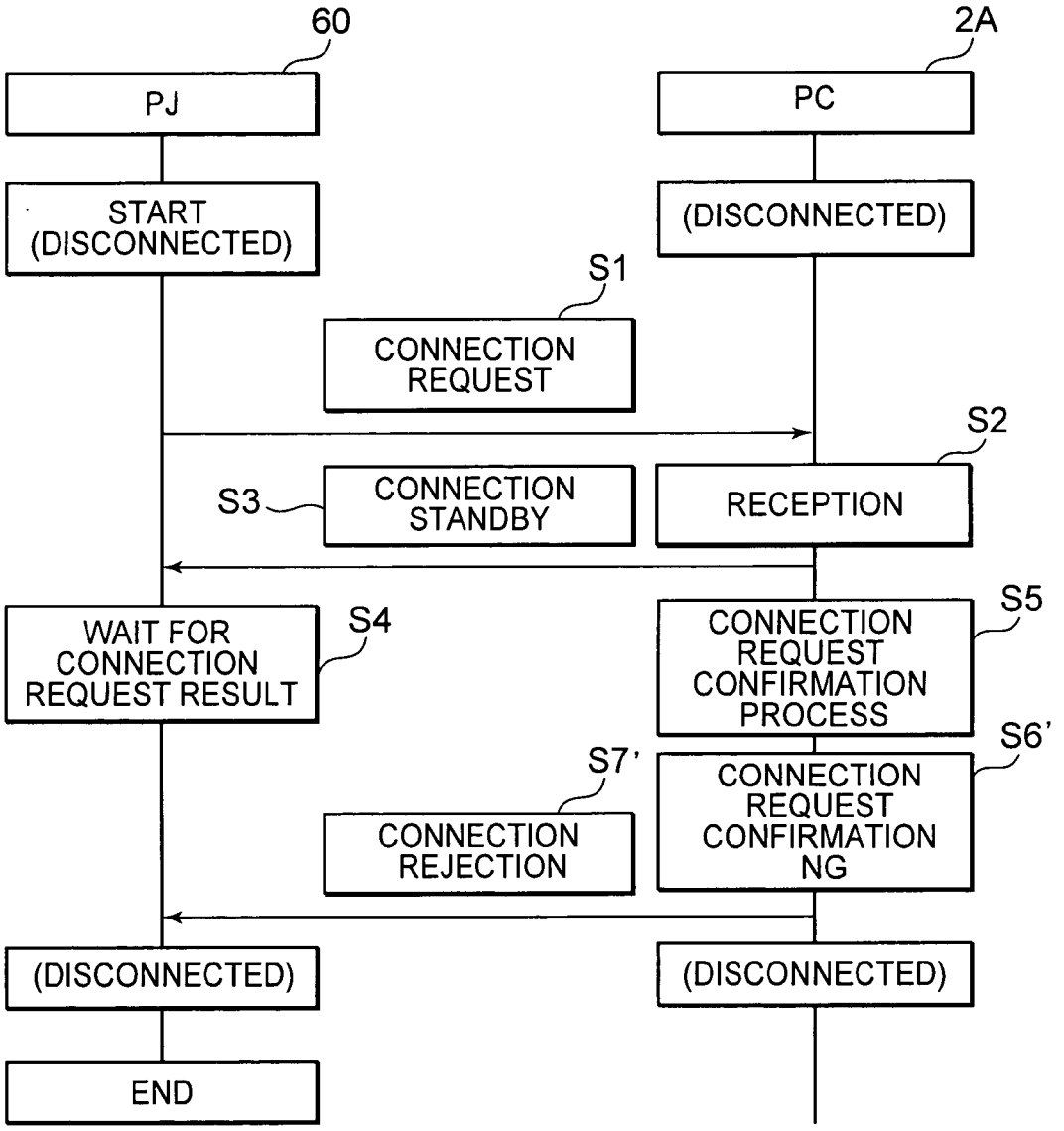
60
2A
PJ
PC
START
(DISCONNECTED)
(DISCONNECTED)
S1
CONNECTION
REQUEST
S2
S3
CONNECTION
STANDBY
RECEPTION
WAIT FOR
CONNECTION
REQUEST RESULT
S4
S5
CONNECTION
REQUEST
CONFIRMATION
PROCESS
S6'
S7'
CONNECTION
REJECTION
CONNECTION
REQUEST
CONFIRMATION
NG
(DISCONNECTED)
(DISCONNECTED)
END

FIG. 11

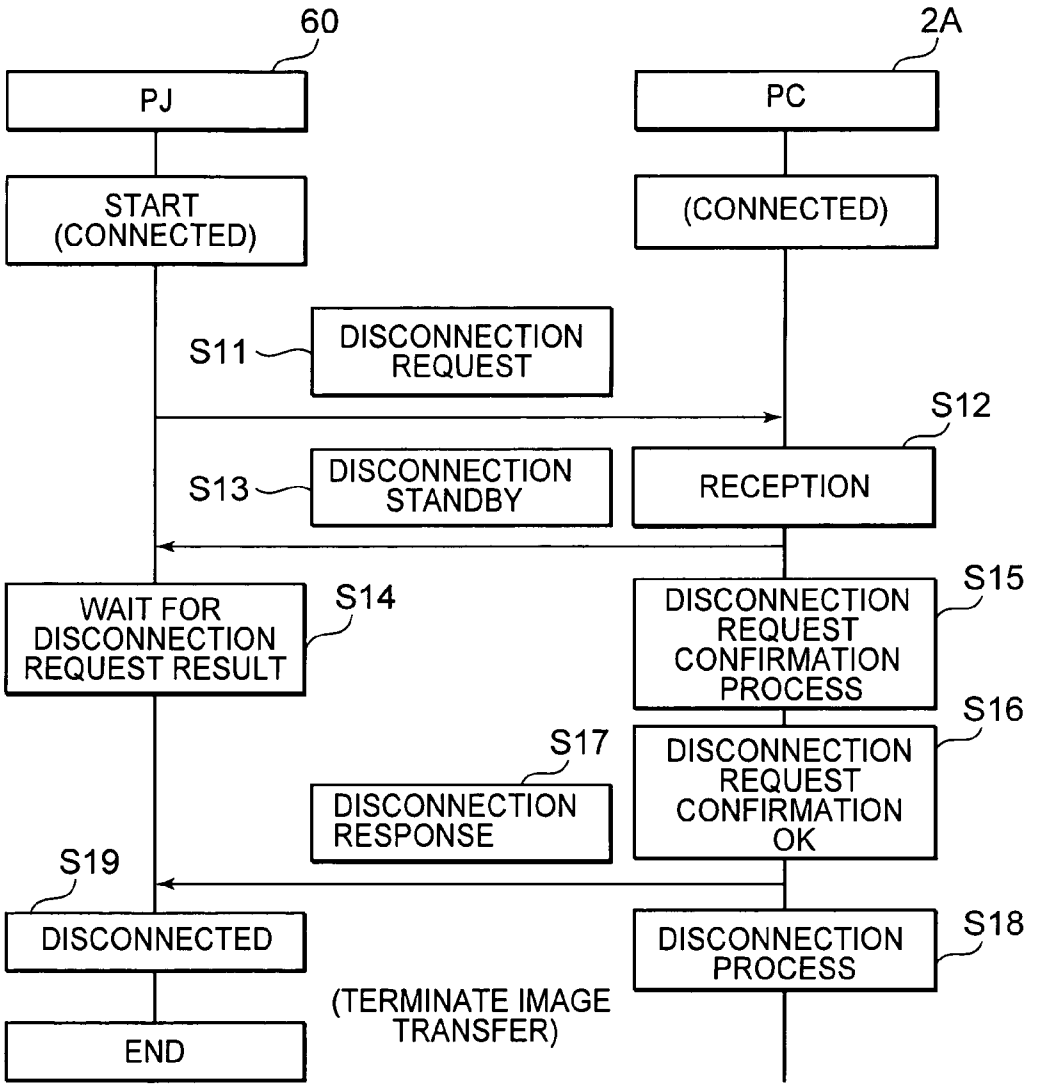
60
2A
PJ
PC
START (CONNECTED)
(CONNECTED)
S11
DISCONNECTION REQUEST
S12
S13
DISCONNECTION STANDBY
RECEPTION
WAIT FOR DISCONNECTION REQUEST RESULT
S14
S15
DISCONNECTION REQUEST CONFIRMATION PROCESS
S16
S17
DISCONNECTION RESPONSE
DISCONNECTION REQUEST CONFIRMATION OK
S19
DISCONNECTED
DISCONNECTION PROCESS
S18
(TERMINATE IMAGE TRANSFER)
END

FIG. 12

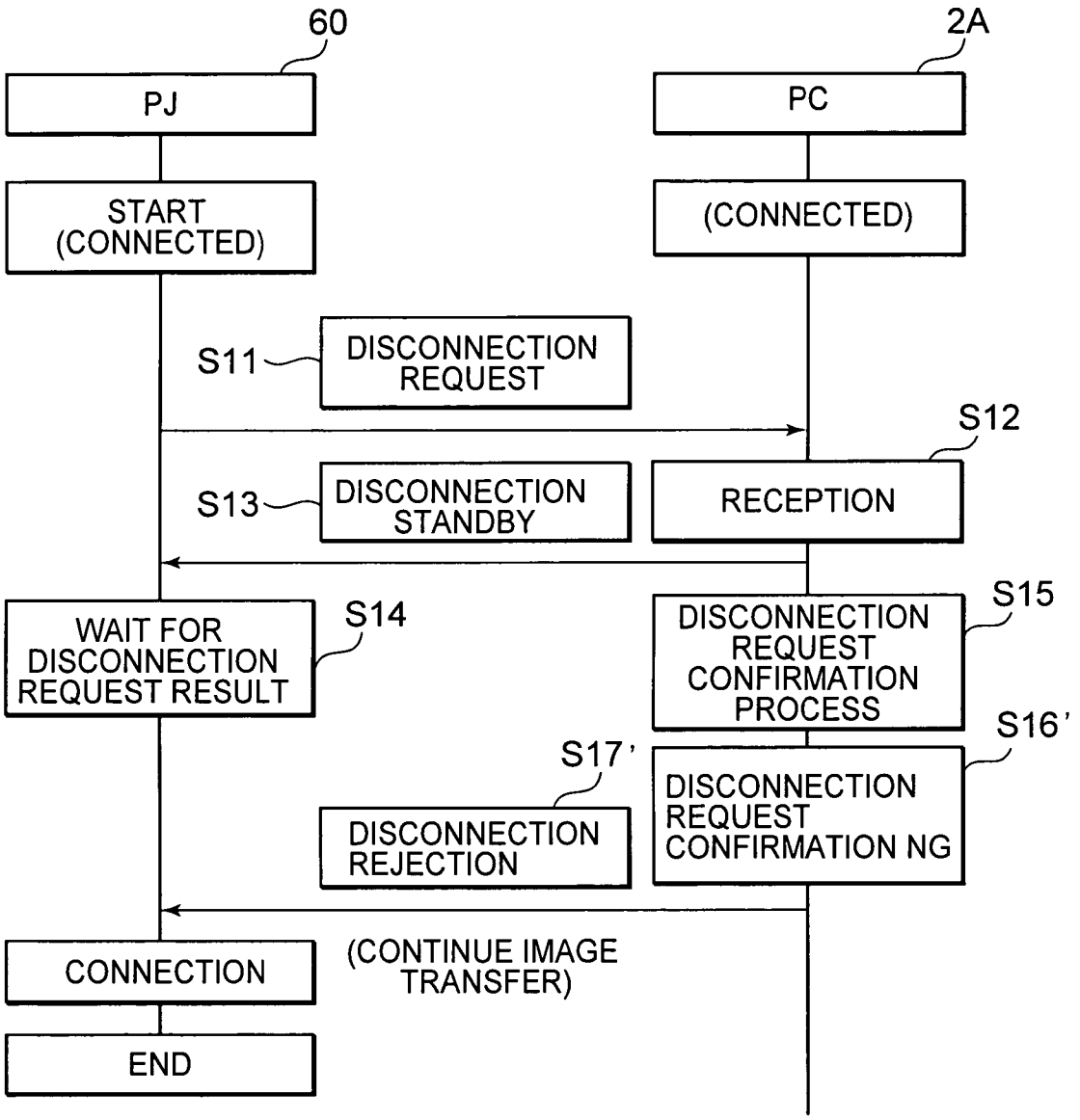
60
2A
PJ
PC
START (CONNECTED)
(CONNECTED)
S11
DISCONNECTION REQUEST
S12
S13
DISCONNECTION STANDBY
RECEPTION
S14
WAIT FOR DISCONNECTION REQUEST RESULT
S15
DISCONNECTION REQUEST CONFIRMATION PROCESS
S16'
S17'
DISCONNECTION REJECTION
DISCONNECTION REQUEST CONFIRMATION NG
CONNECTION
(CONTINUE IMAGE TRANSFER)
END

FIG. 13

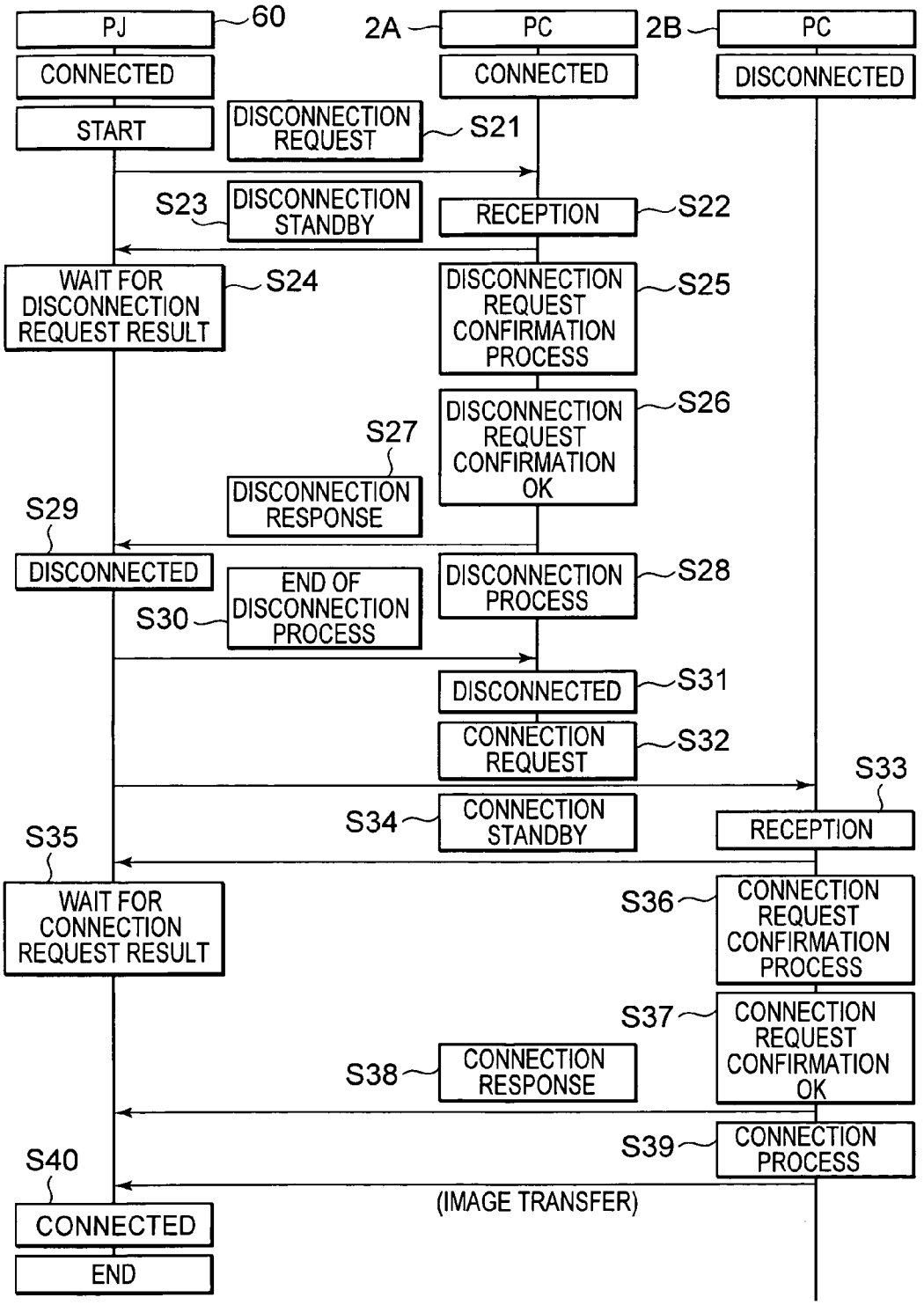
PJ
60
2A
PC
2B
PC
CONNECTED
CONNECTED
DISCONNECTED
START
DISCONNECTION REQUEST
S21
S23
DISCONNECTION STANDBY
RECEPTION
S22
WAIT FOR DISCONNECTION REQUEST RESULT
S24
DISCONNECTION REQUEST CONFIRMATION PROCESS
S25
DISCONNECTION REQUEST CONFIRMATION OK
S26
S27
DISCONNECTION RESPONSE
S29
DISCONNECTED
END OF DISCONNECTION PROCESS
S30
DISCONNECTION PROCESS
S28
DISCONNECTED
S31
CONNECTION REQUEST
S32
S33
S34
CONNECTION STANDBY
RECEPTION
S35
WAIT FOR CONNECTION REQUEST RESULT
S36
CONNECTION REQUEST CONFIRMATION PROCESS
S37
CONNECTION REQUEST CONFIRMATION OK
S38
CONNECTION RESPONSE
S39
CONNECTION PROCESS
S40
(IMAGE TRANSFER)
CONNECTED
END

FIG. 14

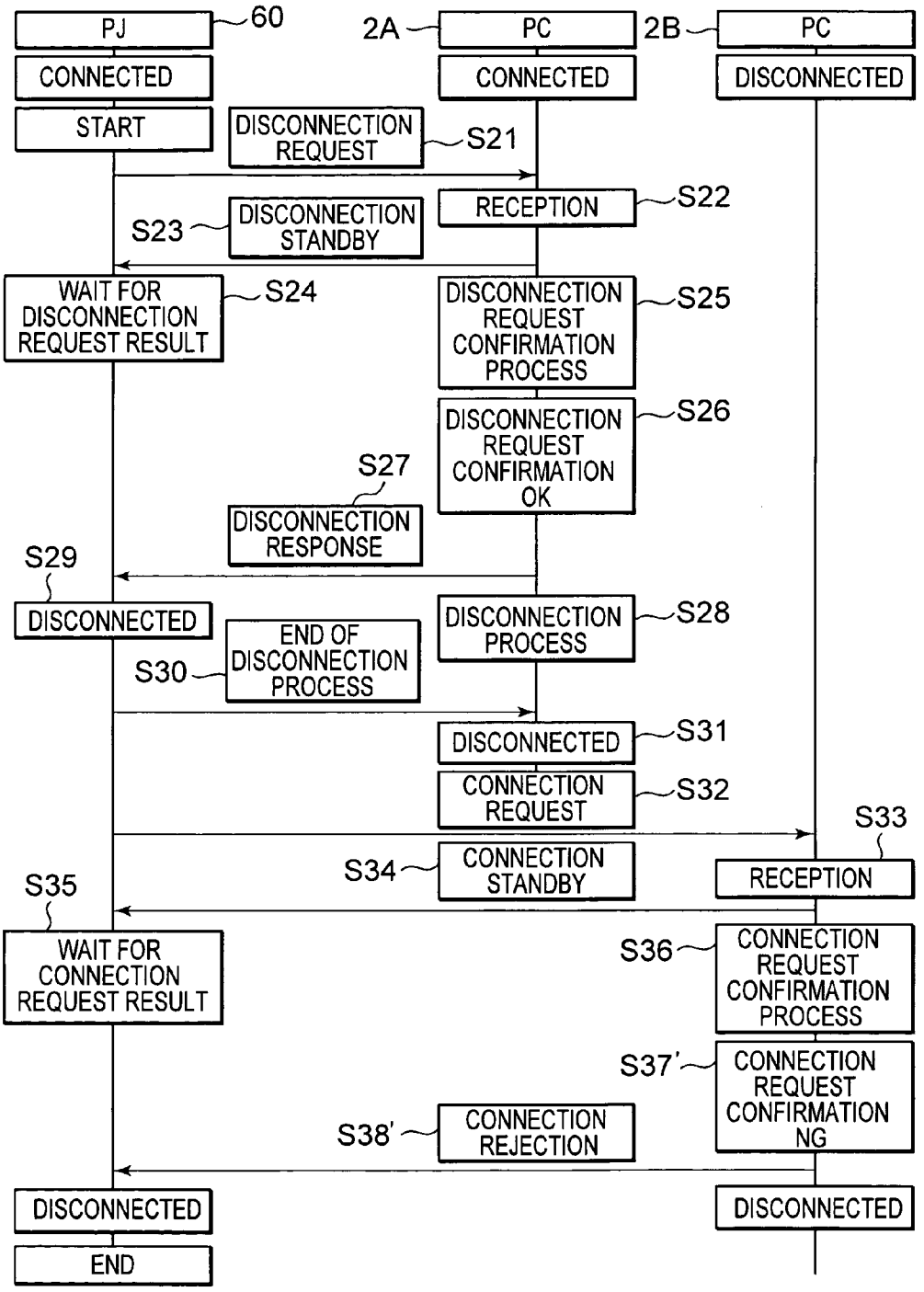
PJ
60
2A
PC
2B
PC
CONNECTED
CONNECTED
DISCONNECTED
START
DISCONNECTION REQUEST
S21
RECEPTION
S22
S23
DISCONNECTION STANDBY
WAIT FOR DISCONNECTION REQUEST RESULT
S24
DISCONNECTION REQUEST CONFIRMATION PROCESS
S25
DISCONNECTION REQUEST CONFIRMATION OK
S26
S27
DISCONNECTION RESPONSE
S29
DISCONNECTED
DISCONNECTION PROCESS
S28
END OF DISCONNECTION PROCESS
S30
DISCONNECTED
S31
CONNECTION REQUEST
S32
S33
S34
CONNECTION STANDBY
RECEPTION
S35
WAIT FOR CONNECTION REQUEST RESULT
S36
CONNECTION REQUEST CONFIRMATION PROCESS
S37'
CONNECTION REQUEST CONFIRMATION NG
S38'
CONNECTION REJECTION
DISCONNECTED
DISCONNECTED
END

FIG. 15

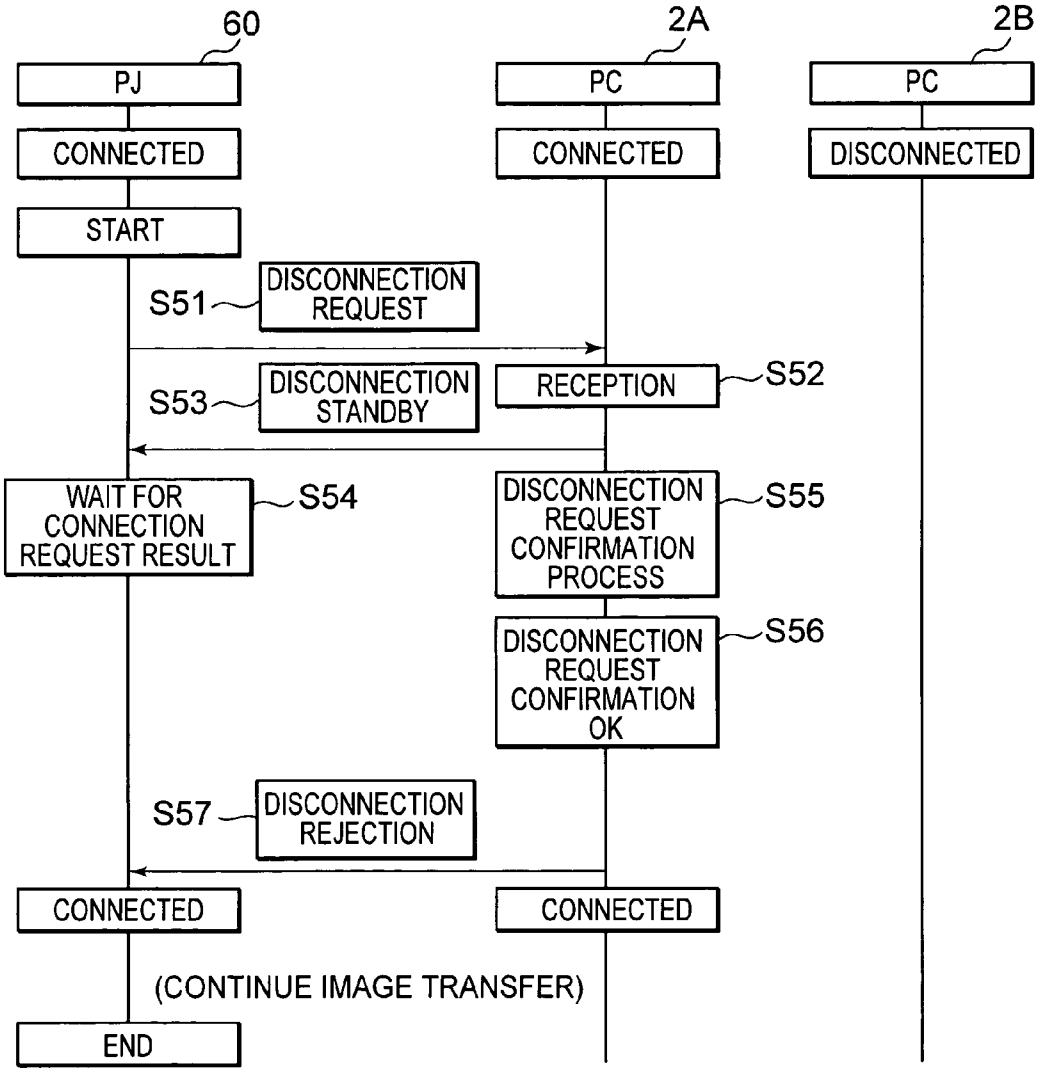
60
2A
2B
PJ
PC
PC
CONNECTED
CONNECTED
DISCONNECTED
START
S51
DISCONNECTION REQUEST
S53
DISCONNECTION STANDBY
RECEPTION
S52
WAIT FOR CONNECTION REQUEST RESULT
S54
DISCONNECTION REQUEST CONFIRMATION PROCESS
S55
DISCONNECTION REQUEST CONFIRMATION OK
S56
S57
DISCONNECTION REJECTION
CONNECTED
CONNECTED
(CONTINUE IMAGE TRANSFER)
END

FIG. 16

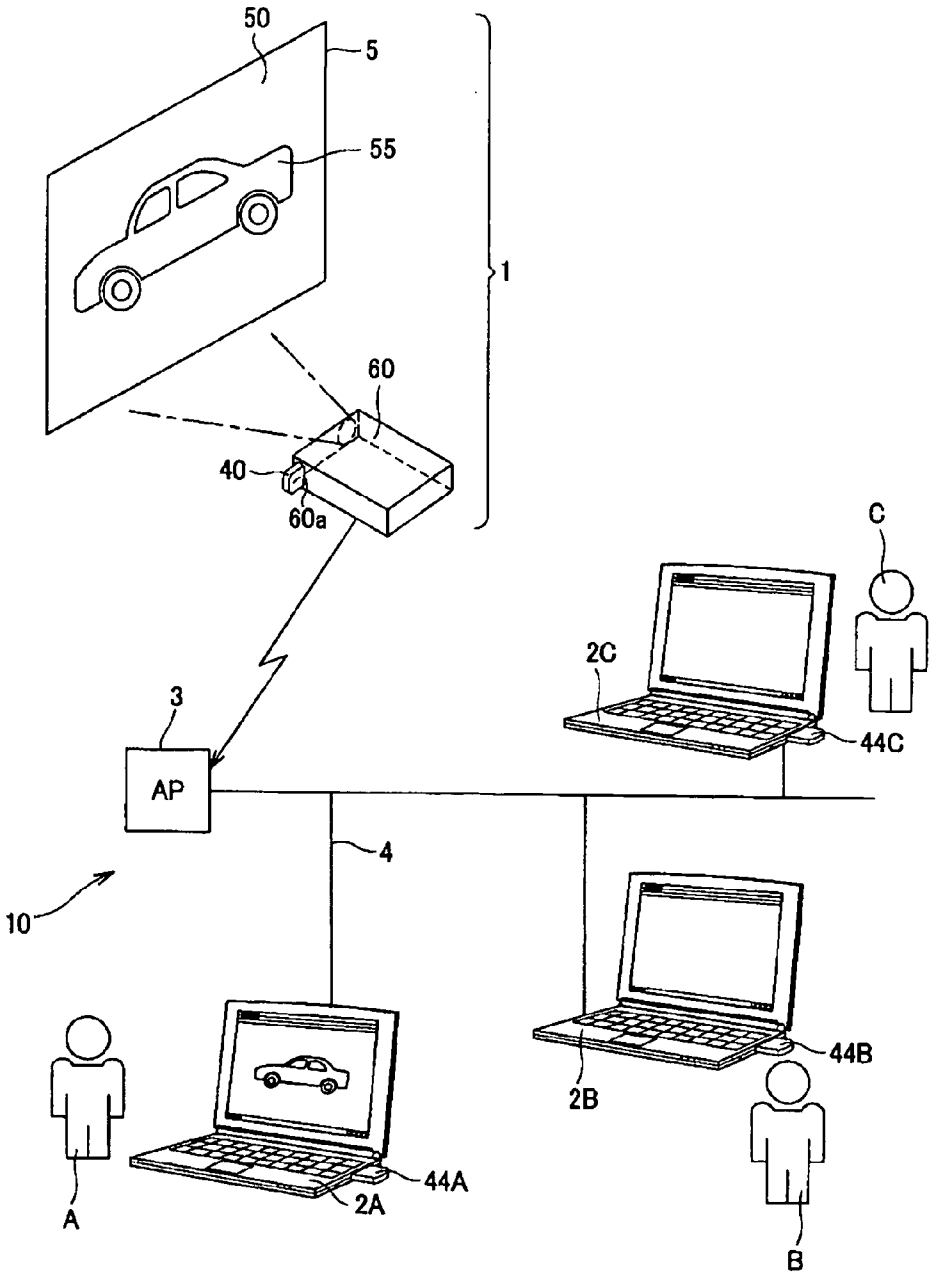

FIG. 17

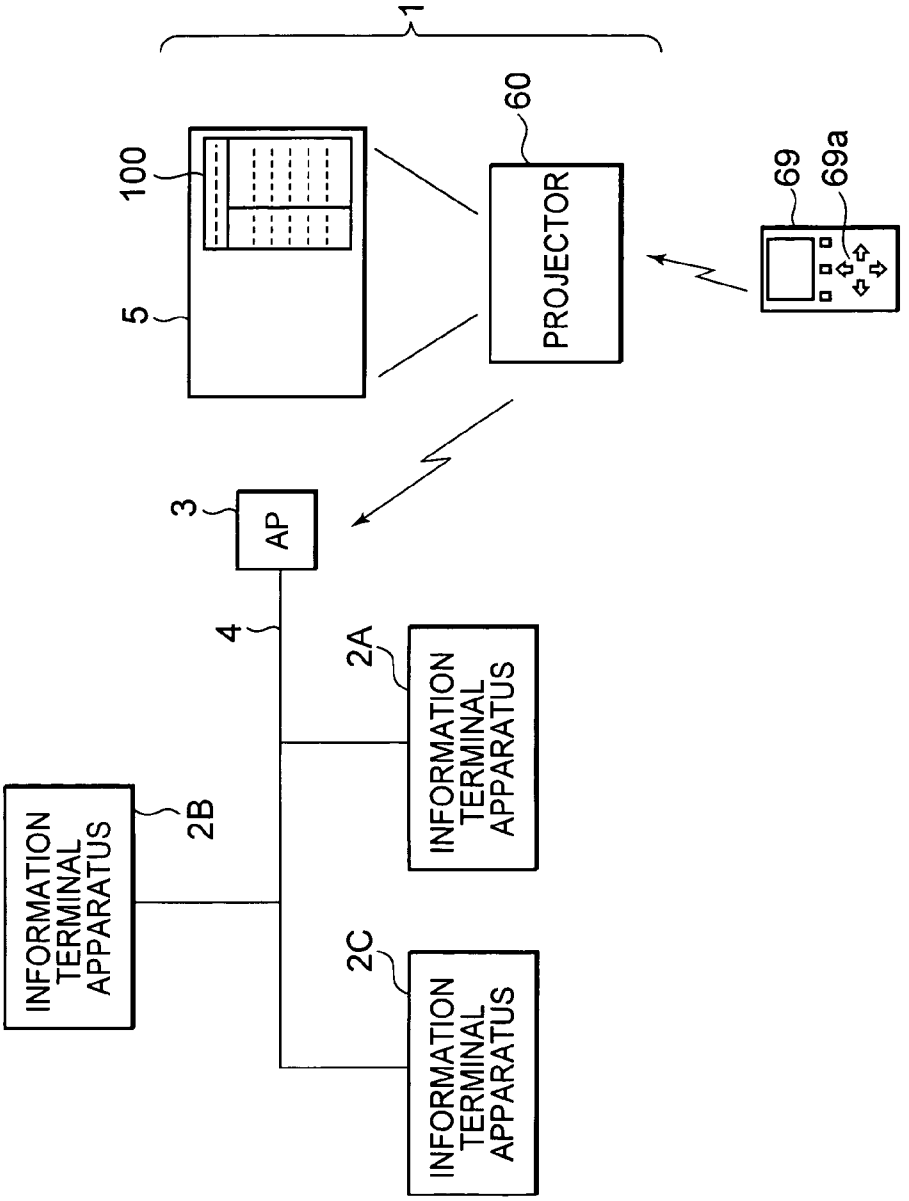
1
100
5
60
PROJECTOR
69
69a
3
AP
4
2A
INFORMATION TERMINAL APPARATUS
2B
INFORMATION TERMINAL APPARATUS
2C
INFORMATION TERMINAL APPARATUS

FIG. 18

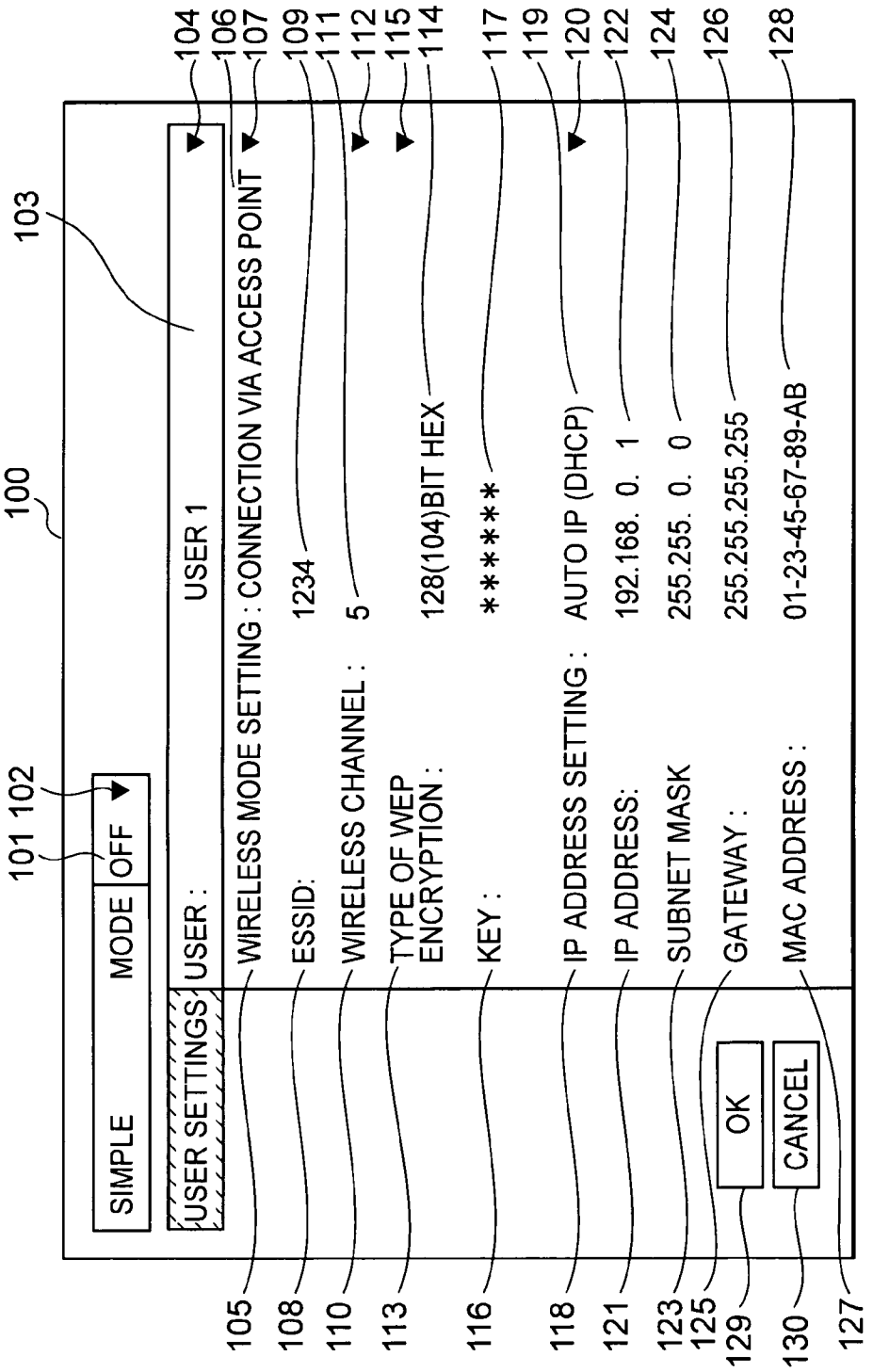
100
101 102
103
SIMPLE
MODE
OFF
USER SETTINGS
USER :
USER 1
WIRELESS MODE SETTING : CONNECTION VIA ACCESS POINT
ESSID:
1234
WIRELESS CHANNEL :
5
TYPE OF WEP ENCRYPTION :
128(104)BIT HEX
KEY :
******
IP ADDRESS SETTING :
AUTO IP (DHCP)
IP ADDRESS:
192.168. 0. 1
SUBNET MASK
255.255. 0. 0
GATEWAY :
255.255.255.255
MAC ADDRESS :
01-23-45-67-89-AB
OK
CANCEL
104
106
107
109
111
112
115
114
117
119
120
122
124
126
128
105
108
110
113
116
118
121
123
125
129
130
127

IMAGE DISPLAY APPARATUS, IMAGE DISPLAY SYSTEM, AND IMAGE DISPLAY METHOD

CROSS REFERENCE TO RELATED APPLICATION

[0001] This application claims priority from Japanese Priority Documents No. 2004-061422, filed on Mar. 4, 2004 and No. 2004-342367, filed on Nov. 26, 2004 with the Japanese Patent Office, which documents are hereby incorporated by reference.

BACKGROUND OF THE INVENTION

[0002] 1. Field of the Invention The present invention relates to an image display apparatus that receives images transferred from a plurality of information terminal apparatuses connected to a wireless or wire network, and displays them on a display section, and further relates to an image display system and an image display method that include a plurality of information terminal apparatuses connected to a wireless or wire network and an image display apparatus.

[0003] 2. Description of Related Art In general, as apparatuses for displaying an image (hereinafter referred to as image display apparatuses), image display apparatuses such as projection display systems comprised of a predetermined plane of projection (projection screen) and an image projection apparatus (projector: PJ) that projects and displays an image on the screen, cathode ray tube (CRT) display apparatuses that display an image using cathode rays, image display apparatuses that display an image on a liquid crystal display (LCD) section and the like are known. Such image display apparatuses generally are capable of receiving image information that is sent from an information terminal apparatus, such as a personal computer, through wire communications or wireless communications, and of displaying an image corresponding to the received image information.

[0004] In Patent Document 1 mentioned below, a configuration is disclosed wherein, between an information terminal apparatus and an image display apparatus that are wire connected, a projector receives image information transmitted from the information terminal apparatus, and projects it onto a screen.

[0005] Patent Document 1: Japanese Laid-Open Patent Application No. 2002-123238

SUMMARY OF THE INVENTION

[0006] Up until now, as in the Patent Document 1 mentioned above, in order to transfer an image from an information terminal apparatus connected to a network to the above-mentioned projector via the network, and to display it on a screen, operations had to be performed on the side of the information terminal apparatus. On the other hand, it was difficult to select, from the side of the projector, an information terminal apparatus from among a plurality of information terminal apparatuses on the side that sends the image.

[0007] The present invention is made in view of the circumstances mentioned above, and seeks to provide an image display apparatus and image display method that are capable of switching among a plurality of networked information terminal apparatuses and selecting a desired information terminal apparatus therefrom, and of displaying on a display section image information from the desired information terminal apparatus.

[0008] In addition, the present invention is made in view of the circumstances above, and seeks to provide an image display system including a plurality of information terminal apparatuses connected to a wire or wireless network and an image display apparatus, wherein switching among the plurality of networked information terminal apparatuses and selecting a desired information terminal apparatus therefrom can be performed from the side of the image display apparatus, and image information from the desired information terminal apparatus can be displayed on a display section of the image display apparatus.

[0009] In order to solve the problems above, an image display apparatus related to the present invention is an image display apparatus including a display section and communications means, and in which image information sent from one or more information terminal apparatuses via a network is received by the above-mentioned communications means and an image based on the above-mentioned image information is displayed on the above-mentioned display section, and is equipped with holding means that stores and holds in advance, of the above-mentioned one or more information terminal apparatuses, information of information terminal apparatuses whose connection to the network is desired, control means that reads the information of the information terminal apparatuses held by the above-mentioned holding means, image signal output means that generates an image signal for displaying, on the above-mentioned display section and, as a list, the information of the information terminal apparatuses read by the above-mentioned control means, and selecting means that selects one information terminal apparatus from the list displayed on the above-mentioned display section, wherein the above-mentioned control means generates a connection request signal with respect to the information terminal apparatus selected by the above-mentioned selecting means, and the above-mentioned communications means transmits the above-mentioned connection request signal from the above-mentioned control means.

[0010] The image signal output means generates the image signal for displaying, as a list, the information of the information terminal apparatuses read from the holding means by the control means, the control means generates the connection request signal with respect to the information terminal apparatus selected by the selecting means from the list displayed on the display section based on the above-mentioned image signal, and the communications means transmits the above-mentioned connection request signal.

[0011] In order to solve the problems above, an image display system related to the present invention is an image display system that includes one or more information terminal apparatuses that are connectable to a network and an image display apparatus that receives a transfer of image information via the network from the above-mentioned one or more information terminal apparatuses and displays on a display section an image based on the above-mentioned image information, wherein the above-mentioned image display apparatus includes holding means that stores and holds in advance, of the above-mentioned one or more information terminal apparatuses, information of informa-

tion terminal apparatuses whose connection to the network is desired, control means that reads the information of the information terminal apparatuses held by the above-mentioned holding means, image signal output means that generates an image signal for displaying, on the above-mentioned display section and, as a list, the information of the information terminal apparatuses read by the above-mentioned control means, and selecting means that selects one information terminal apparatus from the list displayed on the above-mentioned display section, and wherein the above-mentioned control means generates a connection request signal with respect to the information terminal apparatus selected by the above-mentioned selecting means, the above-mentioned communications means transmits the above-mentioned connection request signal generated by the above-mentioned control means, and the above-mentioned selected information terminal apparatus transmits the above-mentioned image information after transmitting an acceptance response signal in response to the above-mentioned connection request signal.

[0012] The image signal output means of the image display apparatus generates the image signal for displaying, as a list, the information of the information terminal apparatuses read from the holding means by the control means, the control means generates the connection request signal with respect to the information terminal apparatus selected by the selecting means from the list displayed on the display section based on the above-mentioned image signal, and the communications means transmits the above-mentioned connection request signal. The selected information terminal apparatus transmits the above-mentioned image information after transmitting the acceptance response signal in response to the above-mentioned connection request signal.

[0013] In order to solve the problems above, an image display method related to the present invention is an image display method for an image display apparatus that receives image information that is sent from one or more information terminal apparatuses via a network and displays an image based on this image information, wherein the method includes a holding step that stores and holds in advance, of the above-mentioned one or more information terminal apparatuses, information of those whose connection to the network is desired, a reading step that reads the information of the information terminal apparatuses held in the above-mentioned holding step, a displaying step that displays, as a list, the information of the information terminal apparatuses that are read, a selecting step that selects one information terminal apparatus from the displayed list, and a transmitting step that generates and transmits a connection request signal with respect to the selected information terminal apparatus.

[0014] The displaying step displays, as a list, the information of the information terminal apparatuses read in the reading step, and the transmitting step generates and transmits the connection request signal with respect to the information terminal apparatus selected from the displayed list in the selecting step.

[0015] According to an image display apparatus of the present invention, it is possible to switch among the plurality of information terminal apparatuses connected to the network and select a desired information terminal apparatus therefrom, and to display on the display section image information from the desired information terminal apparatus, because the image signal output means generates the image signal for displaying, as a list, the information of the information terminal apparatuses read from the holding means by the control means, the control means generates the connection request signal with respect to the information terminal apparatus selected by the selecting means from the list displayed on the display section based on the above-mentioned image signal, and the communications means transmits the above-mentioned connection request signal.

[0016] According to an image display system of the present invention, the image signal output means of the image display apparatus generates the image signal for displaying, as a list, the information of the information terminal apparatuses read from the holding means by the control means, the control means generates the connection request signal with respect to the information terminal apparatus selected by the selecting means from the list displayed on the display section based on the above-mentioned image signal, and the communications means transmits the above-mentioned connection request signal. In addition, the selected information terminal apparatus transmits the above-mentioned image information after transmitting the acceptance response signal in response to the above-mentioned connection request signal. Thus, as a system, it is possible to, from the side of the image display apparatus, switch among the plurality of networked information terminal apparatuses and select the desired information terminal apparatus therefrom, and to display on the display section of the image display apparatus the image information from the desired information terminal apparatus.

[0017] According to an image display method of the present invention, the image display apparatus is able to switch among the plurality of networked information terminal apparatuses and to select a desired information terminal apparatus therefrom, and to display image information from the desired information terminal apparatus, because the displaying step displays, as a list, the information of the information terminal apparatuses read in the reading step, and the transmitting step generates and transmits the connection request signal with respect to the information terminal apparatus selected in the selecting step from the displayed list.

BRIEF DESCRIPTION OF THE DRAWINGS

[0018] **FIG. 1** is a basic configuration diagram of an image display system;

[0019] **FIG. 2** is a diagram schematically showing a wireless network system comprised of a projector of an image display apparatus and three information terminal apparatuses;

[0020] **FIG. 3** is a block diagram schematically showing a configuration of an image display apparatus; **FIG. 4** is a system configuration diagram of software used by an image display apparatus and an information terminal apparatus of a hardware configuration;

[0021] **FIG. 5** is a diagram showing an example of configuration information;

[0022] **FIG. 6** is a block diagram showing a hardware configuration of an image display apparatus;

[0023] **FIG. 7** is a block diagram showing a hardware configuration of an information terminal apparatus;

[0024] **FIG. 8** is a diagram showing a PC selection screen;

[0025] **FIG. 9** is a sequence diagram of a case where a disconnected information terminal apparatus accepts a connection request from an image display apparatus;

[0026] **FIG. 10** is a sequence diagram of a case where a disconnected information terminal apparatus rejects a connection request from an image display apparatus;

[0027] **FIG. 11** is a sequence diagram of a case where a connected information terminal apparatus accepts a disconnection request from an image display apparatus;

[0028] **FIG. 12** is a sequence diagram of a case where a connected information terminal apparatus rejects a disconnection request from an image display apparatus;

[0029] **FIG. 13** is a sequence diagram of a case where a connected information terminal apparatus accepts a disconnection request from an image display apparatus and another information terminal apparatus accepts a connection request from the image display apparatus;

[0030] **FIG. 14** is a sequence diagram of a case where a connected information terminal apparatus accepts a disconnection request from an image display apparatus but another information terminal apparatus rejects a connection request from the image display apparatus;

[0031] **FIG. 15** is a sequence diagram of a case where a connected information terminal apparatus rejects a disconnection request from an image display apparatus, as a result of which another information terminal apparatus remains disconnected;

[0032] **FIG. 16** is a diagram showing another example of an image display system **10** to which the present invention is applied;

[0033] **FIG. 17** is a configuration diagram used to described input operations of configuration items for an image display apparatus in the other image display system; and

[0034] **FIG. 18** is a diagram showing one example of a configuration menu screen.

DESCRIPTION OF THE PREFERRED EMBODIMENTS

[0035] Hereinafter, embodiments of the present invention will be described with reference to the drawings. The following embodiment is an image display system including an example of an image display apparatus of the present invention and information terminal apparatuses that transmit image information to this example of an image display apparatus via a network.

[0036] **FIG. 1** is a diagram showing a basic configuration of an image display system **10**. The image display system **10** is a system that makes up a wireless network by connecting an image display apparatus **1** and three information terminal apparatuses **2**A, **2**B and **2**C to a wireless communications channel. It should be noted that the image display system **10** is merely an example, and the configuration of the present invention is not to be limited by this one example. There may be one information terminal apparatus, or there may be more.

[0037] The wireless communications channel is one that utilizes a transmission path other than a wire cable, such as radio waves and infrared rays. For example, there are wireless communications, such as those for Direct Sequence Spread Spectrum (DSSS) wireless communications, which utilize the 2.4 GHz ISM (Industrial, Scientific and Medical) band which is the same as that adopted in wireless LAN (WLAN) communications compliant with the IEEE 802.11 specifications. These are referred to as Bluetooth. In addition, there are those based on IrDA (Infrared Data Association), which is a specification for infrared data communications.

[0038] The image display apparatus **1** is comprised of a screen **5**, which is an example of a display section, and an image projection apparatus (projector) that projects an image **55** onto a display screen **50** of the screen **5**. A communications module **40**, such as a wireless connection module, for example, is inserted into a slot **60***a* on the projector **60**. This communications module **40** is for communicating with the three information terminal apparatuses **2**A, **2**B and **2**C, and is used for transmitting and receiving request signals, response signals, rejection signals and the like for connecting or disconnecting. In addition, the module **40** is used for receiving image information that is sent from the three information terminal apparatuses **2**A, **2**B and **2**C via the wireless network.

[0039] The three information terminal apparatuses **2**A, **2**B and **2**C may be, for example, personal computers (PCs). Communications modules **44**A, **44**B and **44**C, such as wireless connection modules, are also attached to the body of the information terminal apparatuses **2**A, **2**B and **2**C, respectively, via a slot. These communications modules **44**A, **44**B and **44**C are also used for transmitting and receiving request signals, response signals, rejection signals and the like for the connection and disconnection of communications with the communications module **40** of the projector **60**. In addition, they are also used for transmitting image information to the projector **60**. Needless to say, so long as the information terminal apparatuses are capable of having communications means, such as the above-mentioned communications module **44**, mounted thereon and have functions of transmitting images, they need not be PCs. For example, they may be portable information terminals (PDAs), mobile phones, digital cameras and the like.

[0040] **FIG. 2** is a diagram schematically showing a wireless network system including the projector **60** and the three information terminal apparatuses **2**A, **2**B and **2**C.

[0041] The information terminal apparatus **2**A, for example, encrypts image information that is to be projected and displayed on the screen **5** by the projector **60** of the image display apparatus **1** and transmits it to the communications module **40** of the projector **60** through the communications module **44**A. The same applies to the information terminal apparatuses **2**B and **2**C. The projector **60** of the image display apparatus **1** receives, through the communications module **40**, the above-mentioned encrypted image information wirelessly transmitted from the information terminal apparatus **2**A via the above-mentioned wireless communications channel, and projects it onto the display

screen **50** of the screen **5** as an enlarged image **55** after converting it into decrypted image information.

[**0042**] **FIG. 3** is a block diagram schematically showing a configuration of the image display apparatus **1**. The image display apparatus **1** is comprised of the screen **5** and the projector **60**, receives, through the communications module **40**, such as a wireless connection module, image information that is sent from the above-mentioned three information terminal apparatuses **2**A, **2**B and **2**C via the network, and displays an image based on the image information on the screen **5**.

[**0043**] The projector **60** is comprised of a holding section **63**, a control section **61**, a selecting section **69**, an image signal output section **65** and the above-mentioned communications module **40**.

[**0044**] The holding section **63** stores, in advance, information of information terminal apparatuses whose connection to the wireless network is desired. In the example shown in **FIG. 3**, it stores information of the information terminal apparatuses **2**A, **2**B and **2**C in advance. The control section **61** reads the information of the information terminal apparatuses held by the holding section **63**. The image signal output section **65** generates an image signal for displaying on the screen **5**, as a list **71**, the information of the information terminal apparatuses that is read by the control section **61**. The selecting section **69** selects one information terminal apparatus from the list **71** displayed on the screen **5**.

[**0045**] The control section **61** generates a connection request signal with respect to the information terminal apparatus selected by the selecting section **69**. The communications module **40** transmits the above-mentioned connection request signal from the control section **61** to the appropriate information terminal apparatus **2**A, **2**B or **2**C.

[**0046**] In other words, according to the image display apparatus **1**, the image signal output section **65** generates the image signal for displaying on the screen **5** as the list **71** the information of the information terminal apparatuses read from the holding section **63** by the control section **61**, the control section **61** generates the connection request signal with respect to the information terminal apparatus selected by the selecting section **69** from the list **71** displayed on the screen **5** based on the above-mentioned image signal, and the communications module **40** transmits the above-mentioned connection request signal.

[**0047**] The selected information terminal apparatus transmits the above-mentioned image information after transmitting an acceptance response signal in response to the above-mentioned connection request signal.

[**0048**] Therefore, the image display system **10** is capable of, from the side of the image display apparatus **1**, switching among the plurality of networked information terminal apparatuses and selecting the desired information terminal apparatus therefrom, and of displaying on the screen **5** of the image display apparatus **1** the image information from the desired information terminal apparatus.

[**0049**] By adopting the block configuration above, it may be said that the image display apparatus **1** executes the image display method below. The image display method discussed herein is comprised of a holding step that stores and holds, in advance, of one or more information terminal apparatuses, information of that/those whose connection to a network is desired, a reading step that reads the information of the information terminal apparatuses held in the above-mentioned holding step, a displaying step that displays, as a list, the information of the information terminal apparatuses that are read, a selecting step that selects one information terminal apparatus from the displayed list, and a step that generates and transmits a connection request signal with respect to the selected information terminal apparatus.

[**0050**] As will be described later, the image information apparatus **1** whose configuration is shown in **FIG. 3** and each of the information terminal apparatuses **2**A through **2**C adopt a hardware configuration that centers around a CPU (Central Processing Unit). A system configuration of software that is necessary for the hardware configuration of the image display apparatus **1** and the information terminal apparatus **2**A is shown in **FIG. 4**. It is used in setting the connection configuration for the wireless network, or in transmitting and receiving image information and other control signals and the like via the wireless network.

[**0051**] The image display apparatus **1** has, in advance at the time of shipment, a connection application **41** for network connection, a driver **42** for driving the wireless connection module, and configuration information **43** for network connection written within a ROM, which will be described later. In addition, the image display apparatus **1** comes with the wireless connection module **40** as an accessory.

[**0052**] This wireless connection module **40** may be of a CF (Compact Flash) card type including an antenna and a transmission/reception chip, and may be used by inserting it into a dedicated slot **60***a* provided on the projector **60** of the image display apparatus **1**. More specifically, transmission data is sent from a CPU described later to a baseband processing section via a communications control section or an I/F section, signal processed at the baseband processing section, impressed upon a carrier wave at an RF processing section, and wirelessly transmitted to a device in its vicinity from the wireless communications antenna. On the other hand, radio waves wirelessly transmitted from devices in the vicinity are communicated to the CPU described later via the communications control section or the I/F section after being received by the local wireless communications antenna, having signals extracted at the RF processing section, and being signal processed at the baseband signal processing section.

[**0053**] The connection application **41** is executed by the CPU described later and carries out connection to the wireless network and the transfer of images using the driver **42** and the configuration information **43**.

[**0054**] The image display apparatus **1** may come with the wireless connection module **44** of a USB (Universal Serial Bus) type, for the information terminal apparatus **2**A, having functions similar to those of the wireless connection module **40**. In addition, the image display apparatus **1** may come with a USB memory **45** in which a connection application **46**, a driver **47** and configuration information **48** similar to the above-mentioned connection application **41**, driver **42** and configuration information **43** are stored.

[**0055**] In order to connect the projector **60** of the image display apparatus **1** and the information terminal apparatus

2A to the wireless network, the user clicks on a set-up file with a mouse after plugging the USB memory **45** in a USB jack on the information terminal apparatus **2**A. As a result, an installer will automatically be activated on the information terminal apparatus **2**A, and the connection application **46**, the driver **47** and the configuration information **48** will automatically be stored in the HDD (Hard Disk Drive). Then, if the user inserts the wireless connection module **44** into the USB jack (slot) on the information terminal apparatus **2**A, connection configuration for the wireless network will be completed, and transmission and reception of data with the projector **60** of the image display apparatus **1** that is already running will be carried out via the wireless network.

[**0056**] The configuration information **43** and **48** are configuration information for carrying out wireless network connection. **FIG. 5** is a diagram showing an example of the configuration information **43** and **48**. Configuration information items **7** and configuration information contents **8** are shown. Network mode of the configuration information items **7** is configuration information that differentiates between a mode for connecting to an access point (access point connection mode) and a mode for connecting one-on-one with a given device (ad hoc mode). For the kind of connection shown in **FIG. 1**, this item is set to ad hoc mode. Network name (SSID) is the name of the network, and is a unique name for the image display apparatus **1**. Here, it is PJ-**005**. A reference "**005**" is a serial number. Network channel indicates the frequency band used. For example, it may be a channel varying from "1" and "11" Encryption of data (WEP) is information specifying the method of encryption for protecting data from any risk of interception since the present system constitutes a wireless network. The network mode, network name, network channel and method of data encryption mentioned above are information relating to the configuration of the wireless connection modules **40** and **44**.

[**0057**] In addition, IP address (Internet Protocol Address) of the configuration information items **7** would normally represent a series of numbers corresponding to the address of a computer connected to the Internet. Here, it indicates the address, within the network, of the projector **60** of the image display apparatus **1** and of the information terminal apparatus **2**A. For example, in the configuration information **48** for the information terminal apparatus **2**A, it would be auto IP (DHCP). The projector **60** of the image display apparatus **1** is not a DHCP server of the wireless network, but since there is no configuration item corresponding to auto IP to begin with, by setting it to DHCP, a flow is established where a DHCP server is searched for, and once it is identified that there is none, auto IP operates. Subnet mask is a bit string for dividing subnets in an IP network. A network address is obtained by a logical AND operation of an IP address and a subnet mask.

[**0058**] With respect to the projector **60** of the image display apparatus **1**, the configuration information **43** is already stored in the ROM along with the connection application **41** and the driver **42** at the time of purchase of the projector **60**. With respect to the information terminal apparatus **2**A, the configuration information **48**, as described above, is installed in the HDD or the like from the USB memory **45** along with the connection application **46** and the driver **47**.

[**0059**] Of these configuration information **43** and configuration information **48**, information necessary for wireless network connection, that is, information relating to the configuration of the wireless connection modules **40** and **44**, is created from information unique to the projector **60** of the image display apparatus **1**, for example, its serial number and the like. For example, the network name "PJ-**005**" shown in the above-mentioned **FIG. 5** is created from the serial number "**00005**" that is unique to the projector **60** of the image display apparatus **1**. In addition, a reference code "**382654** . . . ," which is the data encryption method (WEP), is also a 128-bit encryption key generated from the above-mentioned unique serial number.

[**0060**] Summarizing the above, the network name and the data encryption key in the configuration information **43** and **48** are determined from information unique to the projector **60** of the image display apparatus **1**, and these information, along with other configuration information, are, at the time of factory shipment, written in the ROM within the projector **60** of the image display apparatus **1** and in the USB memory **45**.

[**0061**] The information terminal apparatuses **2**B and **2**C are connected to the wireless network in a manner similar to the information terminal apparatus **2**A. However, the USB memories **45** and wireless connection modules **44** for the information terminal apparatuses **2**B and **2**C come with the projector **60** of the image display apparatus **1** at the time of purchase. Naturally, the user may also purchase the USB modules and the wireless connection modules at a later date. Of the configuration information **48** pre-stored in a plurality of USB memories **45**, all of the information relating to the configuration of the wireless connection module **44** shown in **FIG. 5** is generated from information that is unique to the projector **60** of the image display apparatus **1**. Therefore, information relating to the configuration of the wireless connection module **44** would be the same for a plurality of information terminal apparatuses. Of the configuration information **48**, the remaining IP address and subnet mask relating to the information terminal apparatuses are data unique to each of the information terminal apparatuses. The projector **60** of the image display apparatus **1** has a fixed IP address, but as for the plurality of information terminal apparatuses, by virtue of the auto IP function, IP addresses are allocated automatically. When the IP address changes, the subnet mask automatically changes as well.

[**0062**] Thus, by simply inserting the plurality of USB memories **45**, which are included at the time of purchase, into the respective USB jacks of the plurality of information terminal apparatuses **2**A, **2**B and **2**C, carrying out a predetermined installation operation, and inserting the plurality of wireless connection modules **44** into the respective other USB jacks, the user of the image display apparatus **1** may connect the image display apparatus **1** and the plurality of information terminal apparatuses **2**A, **2**B and **2**C to the wireless network.

[**0063**] In addition, of the configuration information shown in **FIG. 5**, the network name and WEP key, which are information necessary for wireless network connection, are, in particular, generated in advance from the serial number unique to the projector **60** of the image display apparatus **1**. Also, by using the configuration method mentioned above, they are automatically set in the plurality of information

terminal apparatuses **2**A, **2**B and **2**C, and thus, no display on the screen **5** is necessary as is conventional. For this reason, since the configuration information is not exposed to a third party, unauthorized entry into or attacks on the network by third parties can be prevented, and, naturally, since unauthorized decryption of encrypted data can also be prevented, security is ensured.

[**0064**] **FIG. 6** is a diagram showing a hardware configuration of the image display apparatus **1**. A read only memory (ROM) **63** and a random access memory (RAM) **64** are connected to a CPU **61** via a bus **62**. In addition, the image signal output section **65** that projects image signals onto the screen **5**, an I/F (Interface) **66**, such as PCMCIA (Personal Computer Memory Card International Association), that interfaces the wireless connection module **40**, and further a remote control optical receiver section **68** are also connected to the CPU **61** via the bus **62**. The remote control optical receiver section **68** receives remote control signals from a remote controller **69**. The connection application **41**, the driver **42** and the configuration information **43** are already stored in the ROM **63** at the time of shipment.

[**0065**] The screen **5** is comparable to the screen **5** shown in **FIG. 3**. Similarly, the wireless connection module **40** is an example of the communications module **40** shown in **FIG. 3**. The ROM **63** or the RAM **64** is an example of the holding section **63** shown in **FIG. 3**, and stores in advance information of the information terminal apparatuses whose connection to the wireless network is desired. Similarly, the CPU **61** is an example of the control section **61**, and reads the information of the information terminal apparatuses held by the ROM **63** or the RAM **64**. The image signal output section **65** is similar to the one shown in **FIG. 3**, and generates image signals for displaying, as the list **71**, on the screen **5** the information of the information terminal apparatuses read by the CPU **61**.

[**0066**] The remote controller **69** is an example of the selecting section **69** shown in **FIG. 3**, and selects one information terminal apparatus from the list **71** displayed on the screen **5**. In addition, using the remote controller **69**, operations such as configuring the connection to the wireless network, switching the connection and disconnection with the plurality of information terminal apparatuses, and so forth are performed.

[**0067**] As described above, since the remote control optical receiver section **68** is provided on the image display apparatus **1**, infrared remote control signals from the remote controller **69** can be received.

[**0068**] In accordance with remote control signals received by the remote control optical receiver section **68**, the CPU **61** references, for example, a data table, which is stored in the ROM **63** or the RAM **64**, for interpreting the remote control signals and interprets commands. For example, if a user, using the remote controller **69**, selects the desired information terminal apparatus and requests connection, the CPU **61** generates a connection request signal with respect to the selected information terminal apparatus, and sends it to the wireless connection module **44** of the appropriate information terminal apparatus from the wireless connection module **40** via the I/F **66**. Thus, it becomes possible to configure wireless network connection.

[**0069**] In addition, when operations for switching or disconnecting information terminal apparatuses are performed by the user using the remote controller **69**, the CPU **61** interprets the command, generates the respective transmission signals corresponding to the command, and sends them to the wireless connection module **44** of the appropriate information terminal apparatus from the wireless connection module **40** via the I/F **66**. Thus, the switching and disconnecting of information terminal apparatuses become possible through operations on the side of the image display apparatus **1**.

[**0070**] In addition, the remote controller **69** is capable of controlling, through remote operations and through the image display apparatus **1**, the fast forwarding/rewinding of the image displayed on the display section of the selected and connected information terminal apparatus **2**. In this case, too, when the projector **60** of the image display apparatus **1** receives the infrared remote control signal from the remote controller **69** through the remote control optical receiver section **68**, the CPU **61** references, for example, the table, which is stored in the ROM **63** or the RAM **64**, for interpreting the remote control signals and interprets the command, the CPU **61** generates the respective transmission control data corresponding to the command, and sends the respective transmission control data from the wireless connection module **40** to the wireless connection module **44** of the information terminal apparatus **2** via the I/F **66**. The information terminal apparatus **2** interprets the control data for fast forwarding/rewinding images, which is received through the wireless connection module **44**, and fast forwards/rewinds the image information displayed on its display section. In conjunction therewith, the image projected onto the screen **5** of the image display apparatus **1** is also fast forwarded/rewound.

[**0071**] With the remote controller **69**, it is further possible to perform such control as making the screen **5** of the image display apparatus **5** black. In addition, the remote controller **69** may be given laser pointer functions.

[**0072**] In addition, the process of fast forwarding/rewinding the image on the information terminal apparatus **2**, the function of performing the control whereby the screen **5** is turned black, and the laser pointer function may be isolated from the remote controller **69** to provide a dedicated presentation tool.

[**0073**] **FIG. 7** is a diagram showing a hardware configuration of the information terminal apparatus **2**A (**2**B and **2**C are also similar). A hard disk drive (HDD) **24** and a random access memory (RAM) **25** are connected to a CPU **20** via a bus **23**. In addition, a USB I/F **26** for interfacing the USB memory **45** and an I/F **28** for interfacing the wireless connection module **44** are connected to the CPU **20** via the bus **23**. Further, an LCD controller **30** for controlling a liquid crystal display apparatus LCD **21** which is the above-mentioned display section of its own, and an I/F **31** for interfacing an input operation section **22** such as a keyboard or a mouse are connected to the CPU **20** via the bus **23**. In addition, it is assumed that image information to be sent out to the image display apparatus **1** is selected and displayed on the liquid crystal display apparatus LCD **21**.

[**0074**] When the above-mentioned connection request signal or the transmission signal for switching or disconnection are sent from the side of the image display apparatus **1**, at the information terminal apparatus **2**A, each transmission signal received by the wireless connection module **44** is handed

over to the CPU **20** via the I/F **28**, and is processed by the CPU **20**. The processing of transmission signals to the image display apparatus **1** from the information terminal apparatus **2**A is performed in a similar fashion.

[**0075**] Below, an operation of the image display system **10** comprised of the image display apparatus **1** of the hardware configuration shown in **FIG. 6** and the information terminal apparatus **2**A of the hardware configuration shown in **FIG. 7** is described.

[**0076**] It is assumed that operations and configuration for connecting the projector **60** of the image display apparatus **1** and the information terminal apparatus **2**A to the wireless network are already completed by the user. In other words, the user has inserted the USB memory **45** into the USB jack on the information terminal apparatus **2**A, an installer has been activated automatically on the information terminal apparatus **2**A by clicking on the setup file using a mouse, and the connection application **46**, the driver **47** and the configuration information **48** have automatically been stored in the HDD **24**. Then, as the user inserts the wireless connection module **44** into the PC card slot on the information terminal apparatus **2**A, configuration for connecting to the wireless network is completed, and it becomes possible to transmit and receive data to and from the projector **60** of the image display apparatus **1**, which is already running, via the wireless network.

[**0077**] First, assuming the user presses a predetermined key (a wireless connection function key) on the operation section of the remote controller **69** shown in **FIG. 6**, then, as shown in **FIG. 8**, the list **71** of the information terminal apparatuses **2**A, **2**B, **2**C . . . that are connectable is displayed within a PC selection screen **70**. The PC selection screen **70** may be displayed on a portion of the screen or displayed on the entire screen.

[**0078**] When the user selects from the list **71** the information terminal apparatus s/he wants to connect with by pressing the up or down selection key on the operation section of the remote controller **69** and presses the confirm (enter) key, the image display apparatus **1** connects with the selected information terminal apparatus. On the list **71** within the PC selection screen **70** of **FIG. 8**, PC-**2**A of user "OΔxx" is selected. During connection, a connection mark **72** is displayed to the left of the selected [PC-**2**A of user "OΔxx"]. In addition, guidance as to which PC is currently connected is also displayed on a PC connection guidance display section **73**. Here, it is displayed as [PC-**2**A of user "OΔxx"]**74**.

[**0079**] In order to disconnect, the information terminal apparatus to be disconnected may be selected by pressing the up or down selection key on the operation section of the remote controller **69**, and the enter key pressed.

[**0080**] Next, several examples of operations performed by the image display apparatus **1** in accordance with operations by the user using the above-mentioned PC selection screen **70** will be described with reference to **FIG. 9** through **FIG. 15**. In **FIG. 9** through **FIG. 15**, the sequence states of the projector **60** of the image display apparatus **1** and personal computers (PCs) **2**A and **2**B are shown. However, in the description below, the sequential states are described treating the personal computers (PCs) **2**A and **2**B as the same as the information terminal apparatuses **2**A and **2**B.

[**0081**] There exist a connected state and a disconnected state for the image display apparatus **1** and the information terminal apparatus **2**. Below, processes according to those states will be described.

[**0082**] First, with reference to **FIG. 9** and **FIG. 10**, a case where the state of the image display apparatus **1** and the information terminal apparatus **2** changes from disconnection will be described. The user displays the PC selection screen **70** on the screen **5** of the image display apparatus **1** by the above-mentioned predetermined key operation on the remote controller **69**. Further, the user selects the information terminal apparatus to connect with by pressing the up or down selection key on the remote controller **69**, and confirms the information terminal apparatus to connect with by pressing the confirm (enter) key.

[**0083**] **FIG. 9** is a sequence diagram of a case where the information terminal apparatus **2**A accepts a connection request from the projector **60** of the image display apparatus **1**. In the sequence diagram of **FIG. 9**, the connection request signal generated by the CPU **61** of the projector **60** of the image display apparatus **1** with respect to the information terminal apparatus **2**A selected by the remote controller **69** is handed over to the wireless connection module **40** via the I/F **66**, and is transmitted from the wireless connection module **40** to the wireless connection module **44** of the appropriate information terminal apparatus **2**A in step S**1**.

[**0084**] The information terminal apparatus **2**A to which the connection request signal is sent in the above-mentioned step S**1** receives the connection request signal by the wireless connection module **44** in step S**2**. The CPU **20** of the information terminal apparatus **2**A receives via the I/F **28** the connection request signal received by the wireless connection module **44**. Then, the CPU **20** generates a connection standby signal, and hands it over to the wireless connection module **44** via the I/F **28**. The wireless connection module **44** transmits the connection standby signal to the wireless connection module **40** of the projector **60** in step S**3**.

[**0085**] Once the CPU **61** of the projector **60** interprets the above-mentioned connection standby signal received by the wireless connection module **40**, a connection request result waiting state is entered in step S**4**.

[**0086**] After transmitting the above-mentioned connection standby signal, the information terminal apparatus **2**A performs a connection request confirmation process at the CPU **20** in step S**5**, and determines whether or not it is currently possible to connect with the projector **60**.

[**0087**] If, from this determination in step S**5**, the CPU **20** determines that connection is possible, the fact that the above-mentioned connection request should be accepted is decided as connection request confirmation OK in step S**6**. The CPU **20**, based on the decision of connection request confirmation OK, generates a connection response signal, which is an acceptance response signal, and hands it over to the wireless connection module **44** via the I/F **28**. The wireless connection module **44** transmits the above-mentioned connection response signal to the wireless connection module **40** of the projector **60** in step S**7**.

[**0088**] Then, the information terminal apparatus **2**A and the projector **60** are connected once the CPU **20** of the information terminal apparatus **2**A executes a connection process in step S**8**. As a result, the CPU **20** of the selected

information terminal apparatus **2**A transmits the image information signal displayed on the liquid crystal display apparatus **21** to the wireless connection module **40** of the projector **60** from the wireless connection module **44** via the I/F **28**.

[**0089**] The wireless connection module **40** of the projector **60** receives the image information transmitted from the information terminal apparatus **2**A. The CPU **61** receives the above-mentioned image information via the I/F **66**, and based thereon, makes image signals based on the above-mentioned image information be output by the image signal output section **65**, and projects and displays the image from the information terminal apparatus **2**A on the screen **5**. Then, in step S**9**, on the side of the projector **60**, connection is established.

[**0090**] Thus, the wireless connection module **40**, which is the communications means of the image display apparatus **1**, transmits the connection request signal generated by the CPU **61** to the information terminal apparatus **2**A, and receives the above-mentioned image information after receiving the acceptance response signal from the information terminal apparatus **2**A.

[**0091**] In addition, as shown in **FIG. 10**, the information terminal apparatus **2**A is also capable of rejecting a connection request from the projector **60** of the image display apparatus **1**. In the sequence diagram of **FIG. 10**, the connection request signal generated by the CPU **61** of the projector **60** with respect to the information terminal apparatus **2**A selected by the remote controller **69** is handed over to the wireless connection module **40** via the I/F **66**, and is transmitted from the wireless connection module **40** to the wireless connection module **44** of the appropriate information terminal apparatus **2**A in step S**1**.

[**0092**] The information terminal apparatus **2**A to which the connection request signal is sent in the above-mentioned step S**1** receives the connection request signal through the wireless connection module **44** in step S**2**. The CPU **20** of the information terminal apparatus **2**A receives via the I/F **28** the connection request signal received by the wireless connection module **44**. Then, the CPU **20** generates a connection standby signal and hands it over to the wireless connection module **44** via the I/F **28**. The wireless connection module **44** transmits the connection standby signal to the wireless connection module **40** of the projector **60** in step S**3**.

[**0093**] Once the CPU **61** of the projector **60** interprets the above-mentioned connection standby signal received by the wireless connection module **40**, a connection request result waiting state is entered in step S**4**.

[**0094**] After transmitting the above-mentioned connection standby signal, the information terminal apparatus **2**A performs a connection request confirmation process at the CPU **20** in step S**5**, and determines whether or not connection with the projector **60** is currently possible.

[**0095**] If, from this determination in step S**5**, the CPU **20** determines that connection is not possible, the fact that the above-mentioned connection request should be rejected is decided as connection request confirmation NG in step S**6**'. Based on the decision of connection request confirmation NC, the CPU **20** generates a connection rejection signal and hands it over to the wireless connection module **44** via the I/F **28**. The wireless connection module **44** transmits the above-mentioned connection rejection signal to the wireless connection module **40** of the projector **60** in step S**7**'.

[**0096**] As a result, the projector **60** of the image display apparatus **1** goes on to maintain disconnection from waiting for the connection request result. In addition, the information terminal apparatus **2**A also maintains disconnection. In this case, image transfer is not performed.

[**0097**] When the projector **60** of the image display apparatus **1** thus receives via the wireless connection module **40** the connection rejection signal from the information terminal apparatus **2**A selected by the remote controller **69**, the CPU **61** does not perform the process of connecting with the selected information terminal apparatus **2**A. In addition, at this point, the CPU **61** may control the image signal output section **65** so as to display, on the PC connection guidance display section **73** within the PC selection screen **70** shown in **FIG. 8**, the fact that the selected information terminal apparatus **2**A cannot be connected as in "the information terminal apparatus **2**A cannot be connected." In addition, the PC selection screen **70** may be closed automatically.

[**0098**] Next, with reference to **FIG. 11** and **FIG. 12**, a case where the image display apparatus **1** and the information terminal apparatus **2** disconnect from a state of being in connection will be described. The user displays on the screen **5** of the image display apparatus **1** the PC selection screen **70** through the above-mentioned predetermined key operation on the remote controller **69**. The user selects the information terminal apparatus to be disconnected by pressing the up or down selection key on the remote controller **69**, and confirms the information terminal apparatus to be disconnected by pressing the confirm (enter) key.

[**0099**] **FIG. 11** is a sequence diagram of a case where the information terminal apparatus **2**A accepts a disconnection request from the projector **60** of the image display apparatus **1**. In the sequence diagram of **FIG. 11**, the disconnection request signal generated by the CPU **61** of the projector **60** of the image display apparatus **1** with respect to the information terminal apparatus **2**A to which the disconnection request has been issued by the remote controller **69** is handed over to the wireless connection module **40** via the I/F **66**, and is transmitted from the wireless connection module **40** to the wireless connection module **44** of the appropriate information terminal apparatus **2**A in step S**11**.

[**0100**] The information terminal apparatus **2**A to which the disconnection request signal is sent in the above-mentioned step S**11** receives the disconnection request signal through the wireless connection module **44** in step S**12**. The CPU **20** of the information terminal apparatus **2**A receives via the I/F **28** the disconnection request signal received by the wireless connection module **44**. The CPU **20** generates a disconnection standby signal, and hands it over to the wireless connection module **44** via the I/F **28**. The wireless connection module **44** transmits the disconnection standby signal to the wireless connection module **40** of the projector **60** in step S**13**.

[**0101**] Once the CPU **61** of the projector **60** interprets the above-mentioned disconnection standby signal received by the wireless connection module **40**, a disconnection request result waiting state is entered in step S**14**.

[**0102**] After transmitting the above-mentioned disconnection standby signal, the information terminal apparatus **2**A

performs a disconnection request confirmation process at the CPU **20** in step S**15**, and determines whether or not it is currently possible to disconnect from the projector **60**.

[**0103**] If, from this determination in step S**15**, the CPU **20** determines that disconnection is possible, the fact that the above-mentioned disconnection request should be accepted is decided as disconnection request confirmation OK in step S**16**. The CPU **20**, based on the decision of disconnection request confirmation OK, generates a disconnection response signal, and hands it over to the wireless connection module **44** via the I/F **28**. The wireless connection module **44** transmits the above-mentioned disconnection response signal to the wireless connection module **40** of the projector **60** in step S**17**.

[**0104**] Then, the information terminal apparatus **2**A and the projector **60** are disconnected once the CPU **20** of the information terminal apparatus **2**A performs a disconnection process in step S**18**, the transfer of image information to the projector **60** from the information terminal apparatus **2**A is terminated, and the projector **60** of the image display apparatus **1** finishes projecting and displaying on the screen **5** the image from the information terminal apparatus **2**A. In step S**19**, the side of the projector **60** becomes disconnected.

[**0105**] In addition, as shown in **FIG. 12**, the information terminal apparatus **2**A is also capable of rejecting a disconnection request from the projector **60** of the image display apparatus **1**. In the sequence diagram of **FIG. 12**, the disconnection request signal generated by the CPU **61** of the projector **60** with respect to the information terminal apparatus **2**A to which the disconnection request has been issued by the remote controller **69** is handed over to the wireless connection module **40** via the I/F **66**, and is transmitted from the wireless connection module **40** to the wireless connection module **44** of the appropriate information terminal apparatus **2**A in step S**11**.

[**0106**] The information terminal apparatus **2**A to which the disconnection request signal is sent in the above-mentioned step S**11** receives the disconnection request signal through the wireless connection module **44** in step S**12**. The CPU **20** of the information terminal apparatus **2**A receives via the I/F **28** the disconnection request signal received by the wireless connection module **44**. The CPU **20** generates a disconnection standby signal and hands it over to the wireless connection module **44** via the I/F **28**. The wireless connection module **44** transmits the disconnection standby signal to the wireless connection module **40** of the projector **60** in step S**13**.

[**0107**] Once the CPU **61** of the projector **60** interprets the above-mentioned disconnection standby signal received by the wireless connection module **40**, a disconnection request result waiting state is entered in step S**14**.

[**0108**] After transmitting the above-mentioned disconnection standby signal, the information terminal apparatus **2**A performs a disconnection request confirmation process at the CPU **20** in step S**15**, and determines whether or not disconnection from the projector **60** is currently possible.

[**0109**] If, from this determination in step S**15**, the CPU **20** determines that disconnection is not possible, the fact that the above-mentioned disconnection request should be rejected is decided as disconnection request confirmation NG in step S**16**'. Based on the decision of disconnection request confirmation NG, the CPU **20** generates a disconnection rejection signal and hands it over to the wireless connection module **44** via the I/F **28**. The wireless connection module **44** transmits the above-mentioned disconnection rejection signal to the wireless connection module **40** of the projector **60** in step S**17**'.

[**0110**] As a result, the projector **60** of the image display apparatus **1** goes on to maintain connection from waiting for the disconnection request result. The information terminal apparatus **2**A continues the transfer of image information to the projector **60**, and the projector **60** of the image display apparatus **1** continues to project and display on the screen **5** the image from the information terminal apparatus **2**A. In addition, at this point, the CPU **61** may control the image signal output section **65** so as to display, on the PC connection guidance display section **73** within the PC selection screen **70** shown in **FIG. 8**, the fact that the information terminal apparatus **2**A that was to be disconnected cannot be disconnected as in "the information terminal apparatus **2**A cannot be disconnected." In addition, the PC selection screen **70** may be closed automatically.

[**0111**] Next, with reference to **FIG. 13**, **FIG. 14** and **FIG. 15**, a case will be described where while the projector **60** of the image display apparatus **1** and the information terminal apparatus **2**A are in a connected state, a disconnection request is issued to the currently connected information terminal apparatus **2**A, and a connection request is issued to another information terminal apparatus **2**B.

[**0112**] **FIG. 13** is a sequence diagram of a case where the information terminal apparatus **2**A accepts a disconnection request from the projector **60** of the image display apparatus **1**, the information terminal apparatus **2**B accepts a connection request from the above-mentioned projector **60**, and the projector **60** of the image display apparatus **1** and the information terminal apparatus **2**B are connected.

[**0113**] Using the remote controller **69**, the PC selection screen **70** is displayed on the screen **5** of the image display apparatus **1**. Using the remote controller **69**, the user selects the information terminal apparatus **2**B to which connection is to be switched. Then, the CPU **61** of the projector **60** of the image display apparatus **1** generates a disconnection request signal with respect to the currently connected information terminal apparatus **2**A, hands it over to the wireless connection module **40** via the I/F **66**, and transmits it from the wireless connection module **40** to the wireless connection module **44** of the appropriate information terminal apparatus **2**A in step S**21**.

[**0114**] The information terminal apparatus **2**A to which the disconnection request signal is sent in the above-mentioned step S**21** receives the disconnection request signal through the wireless connection module **44** in step S**22**. The CPU **20** of the information terminal apparatus **2**A receives via the I/F **28** the disconnection request signal received by the wireless connection module **44**. The CPU **20** generates a disconnection standby signal and hands it over to the wireless connection module **44** via the I/F **28**. The wireless connection module **44** transmits the disconnection standby signal to the wireless connection module **40** of the projector **60** in step S**23**.

[**0115**] Once the CPU **61** of the projector **60** receives the above-mentioned disconnection standby signal through the

wireless connection module **40** and interprets it, a disconnection request result waiting state is entered in step S**24**.

[**0116**] After transmitting the above-mentioned disconnection standby signal, the information terminal apparatus **2**A performs a disconnection request confirmation process at the CPU **20** in step S**25**, and determines whether or not it is currently possible to disconnect from the projector **60**.

[**0117**] If, from this determination in step S**25**, the CPU **20** determines that disconnection is possible, the fact that the above-mentioned disconnection request should be accepted is decided as disconnection request confirmation OK in step S**26**. The CPU **20** of the information terminal apparatus **2**A, based on the decision of disconnection request confirmation OK, generates a disconnection response signal, and hands it over to the wireless connection module **44** via the I/F **28**. The wireless connection module **44** transmits the above-mentioned disconnection response signal to the wireless connection module **40** of the projector **60** in step S**27**.

[**0118**] Then, the information terminal apparatus **2**A and the projector **60** are disconnected once the CPU **20** of the information terminal apparatus **2**A performs a disconnection process in step S**28**, the transfer of image information to the projector **60** from the information terminal apparatus **2**A is terminated, and the projector **60** of the image display apparatus **1** finishes projecting and displaying on the screen **5** the image from the information terminal apparatus **2**A. In step S**29**, the side of the projector becomes disconnected. As a result, in step S**30**, a disconnection process completion notice is transmitted from the projector **60** to the information terminal apparatus **2**A. In step S**31**, the information terminal apparatus **2**A becomes disconnected.

[**0119**] Next, the CPU **61** of the projector **60** generates a connection request signal with respect to the information terminal apparatus **2**B that has been selected for switching connection to by the remote controller **69**, hands it over to the wireless connection module **40** via the I/F **66**, and transmits it from the wireless connection module **40** to the wireless connection module **44** of the appropriate information terminal apparatus **2**B in step S**32**.

[**0120**] Thus, when a selection is made through the remote controller **69** to switch connection from the currently connected information terminal apparatus **2**A to the other information terminal apparatus **2**B, the CPU **61** of the projector **60** transmits the disconnection request signal to the currently connected information terminal apparatus **2**A via the wireless connection module **40**, receives the acceptance response signal (disconnection response signal) from the above-mentioned connected information terminal apparatus **2**A, and transmits the connection request signal to the other information terminal apparatus **2**B after connection is cut.

[**0121**] The information terminal apparatus **2**B to which the connection request signal is sent in the above-mentioned step S**32** receives the connection request signal through the wireless connection module **44** in step S**33**. The CPU **20** of the information terminal apparatus **2**B receives via the I/F **28** the connection request signal received by the wireless connection module **44**. Then, the CPU **20** generates a connection standby signal, and hands it over to the wireless connection module **44** via the I/F **28**. The wireless connection module **44** transmits the connection standby signal to the wireless connection module **40** of the projector **60** in step S**34**.

[**0122**] Once the CPU **61** of the projector **60** interprets the above-mentioned connection standby signal received by the wireless connection module **40**, a connection request result waiting state is entered in step S**35**.

[**0123**] After transmitting the above-mentioned connection standby signal, the information terminal apparatus **2**B performs a connection request confirmation process at the CPU **20** in step S**36**, and determines whether or not it is currently possible to connect with the projector **60**.

[**0124**] If, from this determination in step S**36**, the CPU **20** determines that connection is possible, the fact that the above-mentioned connection request should be accepted is decided as connection request confirmation OK in step S**37**. The CPU **20**, based on the decision of connection request confirmation OK, generates a connection response signal, and hands it over to the wireless connection module **44** via the I/F **28**. The wireless connection module **44** transmits the above-mentioned connection response signal to the wireless connection module **40** of the projector **60** in step S**38**.

[**0125**] Then, the information terminal apparatus **2**B and the projector **60** are connected once the CPU **20** of the information terminal apparatus **2**B performs a connection process in step S**39**, the transfer of image information from the information terminal apparatus **2**B to the projector **60** is begun, and the projector **60** of the image display apparatus **1** projects and displays on the screen **5** the image from the information terminal apparatus **2**B. In step S**40**, the side of the projector **60** becomes connected.

[**0126**] Naturally, in the example shown in **FIG. 13**, too, the wireless connection module **40** of the projector **60** receives image information from the information terminal apparatus **2**B after receiving the acceptance response signal from the information terminal apparatus **2**B in response to the connection request signal generated by the CPU **61**.

[**0127**] **FIG. 14** is a sequence diagram of a case where the information terminal apparatus **2**A accepts a disconnection request from the image display apparatus **1**, but the information terminal apparatus **2**B rejects a connection request from the image display apparatus **1**.

[**0128**] In **FIG. 14**, the procedure from step S**21** to step S**31** performed between the projector **60** of the image display apparatus **1** and the information terminal apparatus **2**A are similar to the above-mentioned case in **FIG. 13**, and therefore, a description thereof will be omitted.

[**0129**] Next, in the sequence diagram of **FIG. 14**, the connection request signal generated by the CPU **61** of the projector **60** with respect to the information terminal apparatus **2**B that is selected for switching connection to by the remote controller **69** is handed over to the wireless connection module **40** via the I/F **66**, and is transmitted from the wireless connection module **40** to the wireless connection module **44** of the appropriate information terminal apparatus **2**B in step S**32**.

[**0130**] In this case, too, when a selection is made through the remote controller **69** to switch connection from the currently connected information terminal apparatus **2**A to the other information terminal apparatus **2**B, the CPU **61** of the projector **60** transmits the disconnection request signal to the currently connected information terminal apparatus **2**A via the wireless connection module **40**, receives the accep-

tance response signal (disconnection response signal) from the above-mentioned connected information terminal apparatus **2**A, and transmits the connection request signal to the other information terminal apparatus **2**B after connection is cut.

[**0131**] The information terminal apparatus **2**B to which the connection request signal is sent in the above-mentioned step S**32** receives the connection request signal through the wireless connection module **44** in step S**33**. The CPU **20** of the information terminal apparatus **2**B receives via the I/F **28** the connection request signal received by the wireless connection module **44**. Then, the CPU **20** generates a connection standby signal, and hands it over to the wireless connection module **44** via the I/F **28**. The wireless connection module **44** transmits the connection standby signal to the wireless connection module **40** of the projector **60** in step S**34**.

[**0132**] Once the CPU **61** of the projector **60** interprets the above-mentioned connection standby signal received by the wireless connection module **40**, a connection request result waiting state is entered in step S**35**.

[**0133**] After transmitting the above-mentioned connection standby signal, the information terminal apparatus **2**B performs a connection request confirmation process at the CPU **20** in step S**36**, and determines whether or not it is currently possible to connect with the projector **60**.

[**0134**] If, from this determination in step S**36**, the CPU **20** determines that connection is not possible, the fact that the above-mentioned connection request should be rejected is decided as connection request confirmation NG in step S**37**'. The CPU **20**, based on the decision of connection request confirmation NG, generates a connection rejection signal, and hands it over to the wireless connection module **44** via the I/F **28**. The wireless connection module **44** transmits the above-mentioned connection rejection signal to the wireless connection module **40** of the projector **60** in step S**38**'.

[**0135**] As a result, the projector **60** of the image display apparatus **1** goes on to maintain disconnection from waiting for the connection request result. In addition, the information terminal apparatus **2**B also maintains disconnection. In this case, the transfer of image information is not performed. In other words, the image display apparatus **1**, the information terminal apparatus **2**A and the information terminal apparatus **2**B all become disconnected. When the projector **60** of the image display apparatus **1** thus receives via the wireless connection module **40** the connection rejection signal from the information terminal apparatus **2**B selected for switching connection to by the remote controller **69**, the CPU **61** does not perform the process of connecting with the selected information terminal apparatus **2**B. In addition, at this point, the CPU **61** may control the image signal output section **65** so as to display, on the PC connection guidance display section **73** within the PC selection screen **70** shown in **FIG. 8**, the fact that the selected information terminal apparatus **2**B cannot be connected as in "the information terminal apparatus **2**B cannot be connected." In addition, the PC selection screen **70** may be closed automatically.

[**0136**] In addition, at the image display apparatus **1**, when connection is to be switched from the currently connected information terminal apparatus **2**A to the other information terminal apparatus **2**B through a selection made by the remote controller **69**, the CPU **61** is to put the connection request signal to the above-mentioned other information terminal apparatus **2**B on hold until the acceptance response signal from the above-mentioned connected information terminal apparatus **2**A is received after transmitting via the wireless connection module **40** the disconnection request signal to the already connected information terminal apparatus **2**A.

[**0137**] **FIG. 15** is a sequence diagram of a case where the information terminal apparatus **2**A rejects a disconnection request from the image display apparatus **1**. In the sequence diagram of **FIG. 15**, a disconnection request signal generated by the CPU **61** of the projector **60** with respect to the information terminal apparatus **2**A to which a disconnection request has been issued by the remote controller **69** is handed over to the wireless connection module **40** via the I/F **66**, and is transmitted from the wireless connection module **40** to the wireless connection module **44** of the appropriate information terminal apparatus **2**A in step S**51**.

[**0138**] The information terminal apparatus **2**A to which the disconnection request signal is sent in the above-mentioned step S**51** receives the disconnection request signal through the wireless connection module **44** in step S**52**. The CPU **20** of the information terminal apparatus **2**A receives via the I/F **28** the disconnection request signal received by the wireless connection module **44**. The CPU **20** generates a disconnection standby signal, and hands it over to the wireless connection module **44** via the I/F **28**. The wireless connection module **44** transmits the disconnection standby signal to the wireless connection module **40** of the projector **60** in step S**53**.

[**0139**] Once the CPU **61** of the projector **60** interprets the above-mentioned disconnection standby signal received by the wireless connection module **40**, a disconnection request result waiting state is entered in step S**54**.

[**0140**] After transmitting the above-mentioned disconnection standby signal, the information terminal apparatus **2**A performs a disconnection request confirmation process at the CPU **20** in step S**55**, and determines whether or not it is currently possible to disconnect from the projector **60**.

[**0141**] If, from this determination in step S**55**, the CPU **20** determines that disconnection is not possible, the fact that the above-mentioned disconnection request should be rejected is decided as disconnection request confirmation NG in step S**56**. The CPU **20**, based on the decision of disconnection request confirmation NG, generates a disconnection rejection signal, and hands it over to the wireless connection module **44** via the I/F **28**. The wireless connection module **44** transmits the above-mentioned disconnection rejection signal to the wireless connection module **40** of the projector **60** in step S**57**.

[**0142**] As a result, the projector **60** of the image display apparatus **1** goes on to maintain connection from waiting for the disconnection request result. The information terminal apparatus **2**A also remains connected, continues the transfer of image information to the projector **60**, and the projector **60** of the image display apparatus **1** continues to project and display on the screen **5** the image from the information terminal apparatus **2**A. In addition, the information terminal apparatus **2**B to which the image display apparatus **1** is to request connection ends up maintaining disconnection.

[0143] At this point, the CPU **61** may control the image signal output section **65** so as to display, on the PC connection guidance display section **73** within the PC selection screen **70** shown in **FIG. 8**, the fact that the information terminal apparatus **2**A from which disconnection was attempted cannot be disconnected as in "the information terminal apparatus **2**A cannot be disconnected." In addition, the PC selection screen **70** may be closed automatically

[0144] As described above, through operations using the remote controller **69** and with respect to the projector **60** of the image display apparatus **1**, the image display system **10** is capable of switching among a plurality of information terminal apparatuses connected to a network and selecting the desired information terminal apparatus therefrom, and of displaying on a display section image information from the desired information terminal apparatus. In other words, so long as the information terminal apparatuses are connected to the wireless network, images can be switched and displayed on the screen **5** with ease. In addition, the information terminal apparatuses connected to the network can be confirmed from the screen **5** of the image display apparatus **1**. Further, since, just through operations from the remote controller **69** of the image display apparatus **1**, it is possible to switch the information terminal apparatus whose image is to be projected onto the screen **5**, even in cases where, for example, there are a plurality of presenters to present in a given order, it becomes unnecessary for each presenter, in accordance with the order, to perform an output on/off operation at each information terminal apparatus, and therefore, the gap in time until the next presentation is eliminated, and presentations can be conducted speedily.

[0145] The present invention is not to have its application limited to the above-mentioned image display system **10** whose configuration is shown in **FIG. 1**. **FIG. 16** is a diagram showing another example of the image display system **10** to which the present invention is applied.

[0146] This other image display system **10** is a system in which the image display apparatus **1** and the information terminal apparatuses **2**A, **2**B and **2**C are connected to a wireless network via an access point **3** compliant with IEEE 802.11b. Each of the information terminal apparatuses **2**A, **2**B and **2**C has a configuration similar to the information terminal apparatus **2** described with reference to **FIG. 7**, and is connected through a LAN **4**.

[0147] **FIG. 17** is a configuration diagram for describing an input operation for configuration items for the image display apparatus **1** in the other image display system **10**. First, the user loads the wireless connection module **40** shown in **FIG. 4** into a predetermined slot on the projector **60**. Under this condition, the power of the image display apparatus **1** is turned on. Next, the user presses a predetermined key (a wireless connection function key) provided within an operation section **69***a* on the remote controller **69**. As a result, a configuration menu screen **100** is displayed on the screen **5**. The configuration menu screen **100** has on/off selection section, such as the one shown in **FIG. 18**, for simple mode.

[0148] **FIG. 18** is a diagram showing an example of the configuration menu screen **100**. As shown in **FIG. 18**, configuration items (contents) for the wireless connection of the image display apparatus **1** are complex. First, a user name input section **103** is provided on the configuration menu screen **100**. Five user names, from user **1** to user **5**, corresponding to five memories can be set. Various configuration contents can be stored for each user. In other words, a plurality of configurations can be stored. By manipulating the selection icon **104** using, for example, the left, right, up and down cursor keys and the enter key of the operation section **69***a* on the remote controller **69**, a selection can be made from the five user names. Conventionally, since only one configuration could be held within the image display apparatus **1** even in cases where wireless network configuration and the like were available, in order to alter the configuration, input was necessary on each occasion. In the present invention, as described above, since it is possible to store a plurality of configurations, if configurations are prepared in advance for each venue at which the image display apparatus **1** is to be used, wireless connection becomes available by simply switching the memory (RAM **64**). In other words, since the user stores a plurality of mutually differing text strings in storage means (RAM **64**) using the above-mentioned input operation based on the environments in which the image display apparatus **1** is used, by simply preparing, in advance, configurations for each venue at which the image display apparatus **1** is to be used and switching the memory (RAM **64**), the appropriate configuration item input for wireless network connection becomes usable.

[0149] A wireless mode setting item **105** refers to the network mode, and is a mode that can be selected, by maneuvering a selection icon **107**, from a mode for connecting to an access point (access point connection mode) or a mode for connecting one-on-one with a given device (ad hoc mode). Here, access point connection **106** is selected.

[0150] An ESSID configuration item **108** is an item for identifying the network name (SSID), refers to the name of the network, and is a name that is unique to the image display apparatus **1**. Here, it is taken to be a serial number "**1234**"**109**. The same characters as those of a computer or an access point to be connected are input. Up to a maximum of thirty-two letters may be inputted.

[0151] Wireless channel configuration item **110** is an item for inputting a network channel, that is, the frequency band to be used. If the network mode is set to "ad hoc (peer to peer)," channels "1" to "11" may be selected, for example, through a selection icon **112**. If it is set to "connection via access point (wireless access point)," the network channel is set to "auto"**111**.

[0152] A WEP encryption type configuration item **113** is an item for selecting the method of data encryption communications. The encryption of data (WEP) is necessary in order to protect data from the risk of data interception since the present system constitutes a wireless network, and is selected from "off,""64(40)-bit ASCII,""128(104)-bit ASCII,""64(40)-bit HEX," and "128(104)-bit HEX." When, for this WEP encryption type configuration item **113**, the user selects, using a selection icon **115**, one of the above-mentioned encryption methods, the number and type of characters that can be inputted in an input area **117** of a key configuration item **116** are determined. If the user has selected with the selection icon **115**"128(104)-bit HEX"**114**, it becomes possible to input the corresponding number and type of characters for 128(104)-bit HEX in the input area **117** of the key configuration item **116**.

[0153] The key configuration item **116** is used for entering a key when the function of encrypting data is used for the WEP encryption type configuration item **113**. The inputted key becomes an asterisk display **117**. The same key as the computer or access point to be connected is inputted. There are restrictions as to the type and number of characters that can be used. The number of characters that can be input differs depending on the settings for data encryption. If "64(40)-bit ASCII" is selected for the WEP encryption type configuration item **113**, the allowable number of characters would be five one-byte characters and symbols ("0to 9,""A to Z,""a to z"). If "128(104)-bit ASCII" is selected, the allowable number of characters would be thirteen one-byte characters and symbols ("0 to 9,""A to Z,""a to z"). If "64(40)-bit HEX" is selected, the allowable number of characters would be ten characters in a combination of "0 to 9" and "a to f." If "128(104)-bit HEX" is selected, the allowable number of characters would be twenty-six characters in a combination of "0 to 9" and "a to f." Thus, for the key configuration item **116**, since limitations are imposed on the type and number of characters that can be used, it is possible to make unnecessary characters not be displayed. Conventionally, even if there were input limitations, the act of inputting itself was possible. In the present invention, only the type of characters that can be inputted are displayed as candidates, and therefore, cases where characters not available for input are inputted and one has to input again are avoided.

[0154] In inputting the WEP key for this key configuration item **116**, character selection is done by pressing the up/down key of the operation section **69***a* on the remote controller **69**, position changes and character confirmation are done by pressing the left/right key of the operation section **69***a*, and overall confirmation is done by pressing the enter key of the operation section **69***a*.

[0155] The wireless setting mode, network name, wireless channel and data encryption method mentioned above are information relating to the configuration of the wireless connection module **40**.

[0156] The IP address setting item **118** is an item for the user to select between "auto (DHCP)" and "manual" as the Internet protocol (IP) address configuration of the projector **60** of the image display apparatus **1**. Here, auto IP (DHCP) **119** is selected with the selection icon **120**. The projector **60** of the image display apparatus **1** is not a DHCP server of the wireless network, but since there is no configuration item corresponding to auto IP to begin with, by configuring it as DHCP, a flow is established where a DHCP server is searched for, and once it is identified that there is none, auto IP operates. If "manual" is selected, it is necessary to set an IP address configuration section **121**, a subnet mask configuration section **123** and a default gateway configuration section **125** of this screen.

[0157] For the IP address configuration section **121**, the IP address setting of the projector **60** of the image display apparatus **1** is entered in an input area **122** by selecting from numbers between 0 and 255. For the subnet mask configuration section **123**, the subnet mask configuration of the image display apparatus **1** is entered in an input area **124** by selecting from numbers between 0 and 255. For the default gateway configuration section **125**, the default gateway configuration of the image display apparatus **1** is entered in an input area **126** by selecting from numbers between 0 and 255.

[0158] MAC (Media Access Control) address configuration section **127** displays the MAC address of a configured wireless module on a display section **128**.

[0159] In order to save the configuration for each item described above, the user may select an "OK" button **129** and press the enter key. As a result, the configuration is saved. In addition, in order to close the configuration menu without saving the configuration, the user may select a "cancel" button **130** and press the enter key.

[0160] In the other image display system **10**, too, whose configuration is shown using **FIG. 16** and **FIG. 17** and whose method of inputting configuration items is shown using **FIG. 18**, the projector of the image display apparatus **1** performs the operations shown in **FIG. 9** through **FIG. 15** above in accordance with user operations using the above-mentioned PC selection screen **70**.

[0161] As described above, the other image display system **10** of **FIG. 16** is also capable of displaying on the display section the image information from the desired information terminal apparatus by switching among the plurality of information terminal apparatuses connected to the network via the access point AP **3** and selecting the desired information terminal apparatus therefrom through operations from the image display apparatus **1**. In other words, as long as the information terminal apparatuses are connected to the wireless network, image information can easily be switched and displayed on the screen **5**. In addition, information terminal apparatuses connected to the network can be identified from the screen **5** of the image display apparatus **1**. Further, since the information terminal apparatus whose image is to be shown on the screen **5** can be switched merely by operations from the remote controller **69** of the image display apparatus **1**, even in cases, for example, where there are a plurality of presenters who are to present in a given order, it is unnecessary for each presenter to carry out output on/off operations at each information terminal apparatus in accordance with the order, and therefore, the gap in time until the next presentation is eliminated, and presentations can be conducted speedily.

[0162] In the embodiment above, as the image display apparatus, an apparatus of a configuration comprised of a projector and a screen is given, however, the present invention is not to have its application limited to the above-mentioned apparatus. For example, it may also be applied to cathode ray tube display apparatuses that display images using cathode rays, or to image display apparatuses that display images on a liquid crystal display section (LCD).

What is claimed is:

1. An image display apparatus including a display section and communications means, and in which image information sent from one or more information terminal apparatuses via a network is received by the communications means and an image based on the image information is displayed on the display section, comprising:

holding means for holding in advance, of the one or more information terminal apparatuses, information of information terminal apparatuses whose connection to the network is desired;

control means for reading out the information of the information terminal apparatuses held by the holding means;

image signal output means for generating an image signal for displaying, on the display section, a list of the information of the information terminal apparatuses read by the control means; and

selecting means for selecting one information terminal apparatus from the list displayed on the display section, wherein

the control means generates a connection request signal with respect to the information terminal apparatus selected by the selecting means, and

the communications means transmits the connection request signal from the control means.

2. The image display apparatus as cited in claim 1, wherein

the communications means receives the image signal after receiving an acceptance response signal from the information terminal apparatus corresponding to the connection request signal.

3. The image display apparatus as cited in claim 2, wherein

when the information terminal apparatus performing the reception is changed to another information terminal apparatus by the selecting means,

the control means controls the communications means to transmits a disconnection request signal to the connected information terminal apparatus, to receive an acceptance response signal from the connected information terminal apparatus, and after the connection is disconnected, to transmit a connection request signal to another information terminal apparatus.

4. The image display apparatus as cited in claim 3, wherein

when the communications means receives a rejection signal from the information terminal apparatus selected by the selecting means, the control means controls to display that it is not able to connect to the selected information terminal apparatus.

5. The image display apparatus as cited in claim 3, wherein

when changed to another information terminal apparatus,

the control means controls the communications means to transmit a disconnection request signal to the connected information terminal apparatus, and to suspend to transmit a connection request signal until an acceptance response signal from the connected information terminal apparatus is received.

6. An image display system comprising:

one or more information terminal apparatuses connectable to a network; and

an image display apparatus for receiving a transfer of image information via the network from the one or more information terminal apparatuses and for displaying on a display section an image based on the image information, wherein

the image display apparatus includes;

holding means for storing and holding in advance, of the one or more

information terminal apparatuses, information of information terminal apparatuses whose connection to the network is desired;

control means for reading the information of the information terminal apparatuses held by the holding means;

image signal output means for generating an image signal for displaying, on the display section and, as a list, the information of the information terminal apparatuses read by the control means; and

selecting means for selecting one information terminal apparatus from the list displayed on the display section, and wherein

the control means generates a connection request signal with respect to the information terminal apparatus selected by the selecting means;

the communications means transmits the connection request signal generated by the control means; and

the selected information terminal apparatus includes communications means, and control means, wherein

when the control means controls the communications means to receive the connection request signal, the control means determines whether connection to the image display apparatus or not, and when determined that the connection is possible, then the control means controls the communications means to transmit an acceptance response signal, and to transmit the image information.

7. An image display method for an image display apparatus that receives image information sent from one or more information terminal apparatuses via a network and displays an image based on this image information, said image display method comprising:

a holding step of storing and holding in advance, of the one or more information terminal apparatuses, information of those whose connection to the network is desired;

a reading step of reading the information of the information terminal apparatuses held in the holding step;

a displaying step of displaying, as a list, the information of the information terminal apparatuses that are read;

a selecting step of selecting one information terminal apparatus from the displayed list; and

a transmitting step of generating and transmitting a connection request signal with respect to the selected information terminal apparatus.

8. The image display method as cited in claim 7, further comprising:

a reception step of receiving an acceptance response signal from the selected information terminal apparatus in response to the connection request signal; and

a reception step of receiving the image information after the acceptance response signal is received.

* * * * *