(19) **Japan Patent Office (JP)**

(12)**Public Patent Publication (A)**

(11) Patent application publication number

Japanese Patent Application Laid-Open No. 2008-165007

(P2008-165007A)

(43) Publication date **: July 17, 2008 (7/17/2008)**

(51) Int.Cl.			F1			Theme Code	(Reference)
G03B	***21/00***	***(2006.01)***	G03B	21/00	D	2K103	
H04N	***5/00***	***(2006.01)***	H04N	5/00	A	5C056	

Number of unclaimed claims for review 13 OL (34 pages in total)

(21) Application number Japanese Patent Application No. 2006-355391 (P2006-355391)

(22) Application date December 28, 2006 (2006.12.28)

(71) Applicant 000005267

Brother Industries, Ltd.
15-1 Naeshiro-cho, Mizuho-ku, Nagoya City, Aichi Prefecture

(74) Agent 100080160
Patent Attorney Kenichiro Matsuo

(72) Inventor Katsura Uchida
15-1 Naeshiro-cho, Mizuho-ku, Nagoya City, Aichi Prefecture
Brother Industries, Ltd.

(72) Inventor Katsuhiro Amano
15-1 Naeshiro-cho, Mizuho-ku, Nagoya City, Aichi Prefecture
Brother Industries, Ltd.

F term (reference) 2K103 AA16 AB10 CA53 CA54 CA73
5C056 AA05 BA10 DA11

(54) [Title of invention] Remote control device and image projection system that remotely control the image projection device

(57) [Abstract]

[Problem to be solved] To facilitate communication connection between a computer device and an image projection device.

[Means for solving the problems] A remote control device 2 is provided for remotely controlling the operation of an image projection device 3 that receives the image data transmitted by wireless communication from a computer device 4 and projects an image according to the image data, and a device 1 that can be communicatively connected to both the computer device 4 and the remote control device 2, and the remote control device 2 generates wireless setting information required for wireless communication between the image projection device 3 and the computer device 4, and writes the wireless setting information to the device 1 at a predetermined timing, and notifies the computer device 4 of the wireless setting information via the device 1, and notifies the image projection device 3 of the wireless setting information by infrared communication.

[Selection drawing] FIG. 3

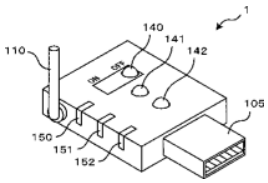

YEALINK EX. 1009

[Scope of Claims]

[Claim 1]

An image projection system including an image projection device having a wireless unit that receives image data transmitted by wireless communication from an external computer device and projects an image corresponding to the image data, a remote control device that remotely controls the operation of the image projection device, and a device that can be communicatively connected to both the computer device and the remote control device;

the remote control device has a wireless setting information generating means for generating wireless setting information required for wireless communication between the image projection device and the computer device;

a wireless setting information writing means for writing the wireless setting information to the device at a predetermined timing; and

a notification means for notifying the image projection device of the wireless setting information written to the device, and the device has a control unit that outputs the wireless setting information written by the remote control device to the computer device.

[Claim 2]

An image projection system according to Claim 1, characterized in that the remote control device

has a connector for connecting to the device, and the wireless setting information writing means writes the wireless setting information to the device via the connector.

[Claim 3]

An image projection system according to Claim 2, characterized in that the wireless setting information generating means updates the wireless setting information when the device is connected to the connector.

[Claim 4]

An image projection system according to Claim 2 or 3, characterized in that the predetermined timing is when it is detected that the device is connected to the connector.

[Claim 5]

An image projection system according to Claim 1, characterized in that the remote control device has a wireless transmitting unit that transmits a wireless signal, and the device has a wireless receiving unit that receives the wireless signal from the remote control device, and the wireless setting information writing means writes the wireless setting information to the device by transmitting the wireless setting information to the device by a wireless signal.

[Claim 6]

An image projection system according to any one of Claims 1 to 5, characterized in that the remote control device has a start-up control instruction unit for issuing a start-up instruction and/or a stop instruction for the image projection device, and the wireless setting information generating means updates the wireless setting information when the start-up control instruction unit is operated.

[Claim 7]

An image projection system according to Claim 6,

characterized in that the specified timing is when the start-up control instruction unit is operated.

[Claim 8]

An image projection system according to any one of Claims 1 to 7, characterized in that the device has a connector that is connected to the computer device, a wireless communication unit that communicates with a wireless unit of the image projection device using settings based on the wireless setting information written from the remote control device when the connector is connected to the computer device, and a program storage unit that stores a program that causes the computer device to function as an image transmission means that transmits image data to the image projection device via the wireless communication unit.

[Claim 9]

An image projection system according to Claim 8, characterized in that the wireless setting information includes an effective time period for which the wireless communication unit is to function,

and when the image transmission means determines that the effective time period has elapsed, it stops the function of the wireless communication unit.

[Claim 10]

An image projection system according to any one of Claims 1 to 9, characterized in that the image projection device includes a wireless receiving unit that receives a wireless signal from the remote control device, and a control unit that, when receiving the wireless setting information from the remote control device via the wireless receiving unit, sets the wireless unit to an operating state, and then determines whether or not wireless communication with the computer device is in progress via the wireless unit, and when the state in which it is determined that wireless communication with the computer device is not in progress continues for a certain period of time, sets the wireless unit to a non-operating state.

[Claim 11]

An image projection system according to any one of Claims 1 to 10, characterized in that the remote control device has a write count setting means for setting the number of times that the same wireless setting information can be written to the device by the wireless setting information writing means,

and the wireless setting information generating means updates the wireless setting information when the wireless setting information exceeds the number of times that the wireless setting information is written by the wireless setting information writing means.

[Claim 12]

An image projection system according to any one of Claims 1 to 11, characterized in that the remote control device has an update suppression means for suppressing updating of the wireless setting information by the wireless setting information generation means, and the wireless setting information generation means, when detecting that the update suppression means has been operated, does not update the wireless setting information.

[Claim 13]

An image projection system comprising of an image projection device having a wireless unit that receives image data transmitted from an external computer device via wireless communication and that projects an image corresponding to the image data, a remote control device that remotely controls the operation of the image projection device, and a device that can be connected to both the computer device and the remote control device; the remote control device is characterized in that it has a wireless setting information generation means that generates wireless setting information required for wireless communication between the image projection device and the computer device, a wireless setting information writing means that writes the wireless setting information to the device at a predetermined timing, and a notification means that notifies the image projection device of the wireless setting information written to the device.

[Detailed description of invention]

[Technical field]

[0001]

The present invention relates to a remote control device for remotely controlling an image projection device and an image projection system including the remote control device.

[Background Technology]

[0002]

Image projection devices such as projectors have been widely used in the past, which input image data from a computer device or the like, and display the image on a liquid crystal display element, and then project the image on a projection screen by irradiating it with light. There is also an image projection device that projects an image based on image data using a DMD (Digital Micromirror Device) element.

[0003]

This image projection device is used in a variety of ways, from small-scale presentations at conferences to large-scale presentations where a large audience is gathered to present the results of one's research. This type of presentation is made by placing a computer device in front of the presenter, transmitting image data corresponding to the image displayed on the display unit of the computer device via a cable from the computer device to an image projection device, and the image projection device then enlarges and projects an image based on the image data.

[0004]

However, in order to project an image using an image projection device, it is necessary to connect the computer device and the image projection device with a cable, as described above. This requires the preparation and connection of cables, which can be complicated. Furthermore, it is necessary to prepare a cable according to the distance between the presenter's computer device and the image projection device.

[0005]

In recent years, image projection devices compatible with wireless LANs (Local Area Networks) such as IEEE 802.11a/b/g have been provided, and image data can be transmitted from a computer device to the image projection device via wireless communication, thereby improving convenience.

[0006]

However, in order to wirelessly connect a computer device to a wireless LAN-compatible image projection device, it is necessary to configure wireless communication settings for both the computer device and the image projection device. In such a case, setting up wireless communication requires a certain level of knowledge and is often not easy. In view of this, there have been proposals for improving the ease of setting up this wireless communication.

[0007]

For example, Patent Literature 1 proposes a technology in which an image projection device projects wireless communication setting information, such as a Wired Equipment Privacy (WEP) key, onto a screen, and the user of the computer device inputs the setting information into the computer device while viewing the setting information projected onto the screen, thereby establishing a wireless connection between the computer device and the image projection device.

[0008]

Furthermore, Patent Literature 2 proposes a technology in which the wireless communication setting information set in a computer device is read via the USB connector using an information storage medium equipped with a USB connector, and then the information storage medium is connected to an image projection device via the USB connector, thereby setting the wireless communication setting information read from the computer device in the image projection device.

[0009]

Moreover, Patent Literature 3 proposes a technology in which a USB memory that stores the same information as the wireless communication setting information of the image projection device and also stores a driver program, and a wireless connection module are sold together with the image projection device, and the USB memory is connected to the computer device, and the wireless communication setting information and the driver program are automatically stored in the computer device, and then a wireless connection module is connected to establish a wireless connection between the image projection device and the computer device.

[Patent Literature 1] Japanese Unexamined Patent Publication No. 2003-069923

[Patent Literature 2] Japanese Unexamined Patent Publication No. 2005-202754

[Patent Literature 3] Japanese Unexamined Patent Publication No. 2005-285091

[Disclosure of invention]

[Problems to be solved by the invention]

[0010]

However, while the technology described in Patent Literature 1 allows users to visually grasp the wireless communication setting information of an image projection device, the wireless communication setting information of a computer device must be set manually, which requires a certain degree of knowledge and time.

[0011]

Furthermore, the technology described in Patent Literature 2 has the advantage that it is not necessary to manually input wireless communication setting information, but since the wireless communication setting information set in the computer device is set in the image projection device, for example, when it is necessary to switch the computer device that outputs the image to be projected on the image projection device during a conference, it is necessary to connect an information storage medium with a USB connector to the computer device to be switched to, and then connect it to the image projection device, which makes the setting process complicated and time-consuming. In addition, the computer device must be manually configured in advance with encryption information such as a WEP key and with settings such as an access point, which, like the technology described in Patent Literature 1, requires a certain degree of knowledge and time.

[0012]

Moreover, the technology described in Patent Literature 3 is superior to Patent Literature 1 and 2 in that it allows automatic configuration of wireless communication on a computer device by connecting a USB memory that stores the same information as the wireless communication setting information of the image projection device to the computer device. However, since the wireless communication setting information of the image projection device is fixed, once the wireless communication setting information is leaked, there is a risk that the wireless communication between the image projection device and the computer device may be intercepted, which poses a security problem. For example, when an image projection device is shared among multiple groups, the wireless communication setting information remains on the computer device of the first group even after the first group has used it, so even if a second group starts using the image projection device, wireless communication can continue from the first group, which poses a security risk.

[Means for solving the problems]

[0013]

Therefore, in order to solve such problems, the present invention provides an image projection system including an image projection device having a wireless unit that receives image data transmitted by wireless communication from an external computer device and projects an image corresponding to the image data, and a remote control device that remotely controls the operation of the image projection device, and a device that can be communicatively connected to both the computer device and the remote control device, wherein the remote control device has a wireless setting information generating means for generating the wireless setting information required for wireless communication between the image projection device and the computer device, a wireless setting information writing means for writing the wireless setting information to the device at a predetermined timing, and a notification means for notifying the image projection device of the wireless setting information written to the device, and the device has a control unit that outputs the wireless setting information written by the remote control device to the computer device.

[0014]

The invention described in Claim 2 is characterized in that, in the invention described in Claim 1, the remote control device has a connector that connects to the device, and the wireless setting information writing means writes the wireless setting information to the device via the connector.

[0015]

The invention described in Claim 3 is characterized in that, in the invention described in Claim 2, the wireless setting information generating means updates the wireless setting information when the device is connected to the connector.

[0016]

The invention described in Claim 4 is characterized in that, in the invention described in Claim 2 or Claim 3, the predetermined timing is when it is detected that the device is connected to the connector.

[0017]

The invention described in Claim 5 is characterized in that, in the invention described in Claim 1, the remote control device has a wireless transmitting unit that transmits a wireless signal, and the device has a wireless receiving unit that receives the wireless signal from the remote control device, and the wireless setting information writing means writes the wireless setting information to the device by transmitting the wireless setting information to the device by a wireless signal.

[0018]

The invention described in Claim 6 is characterized in that, in the invention described in any one of Claims 1 to 5, the remote control device has a start-up control instruction unit for issuing a start-up instruction and/or a stop instruction to the image projection device, and the wireless setting information generating means updates the wireless setting information when the start-up control instruction unit is operated.

[0019]

The invention described in Claim 7 is characterized in that, in the invention described in Claim 6, the predetermined timing is when the start-up control instruction unit is operated.

[0020]

The invention described in Claim 8 is characterized in that, in the invention described in any one of Claims 1 to 7, the device has a connector that connects to the computer device, and a wireless communication unit that communicates with a wireless unit of the image projection device using settings based on the wireless setting information written from the remote control device when the connector is connected to the computer device, and a program storage unit that stores a program that causes the computer device to function as an image transmission means that transmits image data to the image projection device via the wireless communication unit.

[0021]

The invention described in Claim 9 is characterized in that, in the invention described in Claim 8, the wireless setting information includes an effective time for which the wireless communication unit is to function, and when the image transmission means determines that the effective time has elapsed, it stops the function of the wireless communication unit.

[0022]

The invention described in Claim 10 is characterized in that, in the invention described in any one of Claims 1 to 9, the image projection device includes a wireless receiving unit that receives a wireless signal from the remote control device, and a control unit that, when receiving the wireless setting information from the remote control device via the wireless receiving unit, puts the wireless unit into an operating state, and then determines whether or not wireless communication with the computer device is in progress via the wireless unit, and when the state in which it is determined that wireless communication with the computer device is not in progress continues for a certain period of time, puts the wireless unit into a non-operating state.

[0023]

Furthermore, the invention described in Claim 11 is characterized in that, in the invention described in any one of Claims 1 to 10, the remote control device has a write count setting means for setting the number of times that the same wireless setting information can be written to the device by the wireless setting information writing means, and the wireless setting information generating means updates the wireless setting information when the wireless setting information writing means writes the wireless setting information to the device and the number of times the wireless setting information can be written exceeds the number of times.

[0024]

The invention described in Claim 12 is characterized in that in the invention described in any one of Claims 1 to 11, the remote control device has an update suppression means for suppressing updating of the wireless setting information by the wireless setting information generation means, and the wireless setting information generation means does not update the wireless setting information when it detects that the update suppression means has been operated.

[0025]

The invention described in Claim 13 is an image projection system including an image projection device comprising of a wireless unit that receives the image data transmitted from an external computer device by wireless communication and projects an image corresponding to the image data, a remote control device that remotely controls the operation of the image projection device, and a device that

can be connected to both the computer device and the remote control device, wherein the remote control device has a wireless setting information generation means that generates wireless setting information required for wireless communication between the image projection device and the computer, a wireless setting information writing means that writes the wireless setting information to the device at a predetermined timing, and a notification means that notifies the image projection device of the wireless setting information written to the device.

[Effects of the Present Invention]

[0026]

The remote control device in the invention described in Claims 1 and 13 is equipped with a wireless setting information generating means for generating the wireless setting information required for wireless communication between the image projection device and the computer, a wireless setting information writing means for writing the wireless setting information to the device at a predetermined timing, and a notification means for notifying the image projection device of the wireless setting information written to the device. Therefore, communication between the image projection device and the computer device can be performed based on the wireless communication setting information set by the remote control device, making it possible to provide a highly confidential wireless device or image projection system. Moreover, the wireless setting information is generated by the remote control device, and the wireless setting information can be simultaneously transmitted from the remote control device to the device and the image projection device, thereby shortening the time required to set the wireless setting information.

[0027]

Furthermore, according to the invention described in Claim 2, the wireless setting information is written to the device via the connector, so that the wireless setting information can be reliably written.

[0028]

Additionally, according to the invention described in Claim 3, when a device is connected to the connector, the wireless setting information is updated, so that even if, for example, an image projection device is used in a conference such as a presentation, and computer devices of an unspecified number of participants are used, it is possible to prevent image data from being erroneously sent from a computer device that previously used the image projection device and then transmitted from the image projection device.

[0029]

Further, according to the invention described in Claim 4, the specified timing is set to when it is detected that a device has been connected to the connector, so that the writing of wireless setting information can be reliably performed.

[0030]

Moreover, according to the invention described in Claim 5, the writing of wireless setting information to the device is performed using a wireless signal such as an infrared signal, making it easy to write the wireless setting information. Therefore, when there are a plurality of image projection devices, the settings can be easily switched between the devices.

[0031]

Furthermore, according to the invention described in Claim 6, the wireless setting information is updated when the start-up control instruction unit is operated, that is, when an instruction to start or stop the image projection device is given, so that the wireless setting information can be updated every time the image projection device is used. Thus, even if an image projection device is used for a conference such as a presentation, and computer devices of an unspecified number of participants are used, it is possible to prevent image data from being mistakenly sent from a computer device that has previously used the image projection device and then sent from the image projection device.

[0032]

Also, according to the invention described in Claim 7, when the start-up control instruction unit is operated, wireless setting information is written to the device, so that startup of the image projection device and writing of the wireless settings to the device can be performed simultaneously, and image data transmitted from the computer device can be projected more quickly in the image projection device.

[0033]

Further, according to the invention described in Claim 8, by connecting the device to a computer device, the computer device functions as an image transmission means that transmits the image data to the image projection device via a wireless communication unit, making it easy to set up wireless

communication using the device.

[0034]

In addition, according to the invention described in Claim 9, since the wireless setting information includes the effective time for which the wireless communication unit is to function, even if the wireless setting information is not updated, unintended communication between the computer device and the wireless unit can be avoided, and power consumption can be reduced by stopping the wireless unit.

[0035]

According to the invention described in Claim 10, when the state in which it has been determined that wireless communication with the computer device is not in progress continues for a certain period of time, the image projection device can determine that one presentation has ended because there has been no communication between the computer device and the image projection device for a predetermined period of time or more. Therefore, the encryption key can be changed for each presentation.

[0036]

Furthermore, according to the invention described in Claim 11, the number of times the same wireless setting information can be written to a device can be set, so that it becomes possible to transmit image data from multiple computer devices to an image projection device, making it possible to provide an appropriate image projection system for a conference.

[0037]

According to the invention described in Claim 12, the update of the wireless setting information can be suppressed by operating the update suppression means arranged in the remote control device, so that the same wireless setting information can be written to the device, and image data can be transmitted from multiple computer devices to the image projection device, making it possible to provide an appropriate image projection system according to the conference.

[Detailed Description of the Preferred Embodiments]

[0038]

(Summary of the Image Projection System S)

The embodiments of the present invention will be described below with reference to the drawings. FIG. 1 is an overall configuration diagram of an image projection system S in this embodiment, FIG. 2 is a diagram for explaining the general operation of the image projection system S in this embodiment, FIG. 3 is an external view of a wireless device, and FIG. 4 is an external view of a remote control device in this embodiment.

[0039]

As shown in FIG. 1, the image projection system S in this embodiment includes a wireless device 1 (corresponding to an example of a device), a remote control device 2 that can communicate with the wireless device 1 and remotely controls the operation of an image projection device 3 (described below), an image projection device 3 that projects an image on a screen according to image data input from the outside, and a personal computer device 4 (hereinafter referred to as “computer device 4”) that transmits image data to the image projection device 3. The wireless device 1 is a USB dongle that functions as a wireless part of a computer device 4 and as a memory. The computer device 4 connects the USB connector 105 (see FIG. 3) described below in the wireless device 1, so that the wireless device 1 functions as a wireless unit and transmits image data to the image projection device 3 via the wireless device 1. The image projection device 3 receives image data transmitted by wireless communication from the computer device 4 via the wireless device 1 and projects an image corresponding to the image data onto the screen.

[0040]

Here, the wireless device 1 and the image projection device 3 each have a wireless unit that complies with the wireless LAN standard so that the wireless communication between the wireless device 1 and the image projection device 3 can meet the wireless LAN (Local Area Network) standard such as IEEE802.11a/b/g.

[0041]

In a wireless LAN, settings must be made in advance to perform wireless communication as described above. The wireless communication setting information that must be set (hereafter referred to as “wireless setting information”) includes the network name, SSID (Extended Service Set Identifier), and the encryption key, WEP (Wired Equipment Privacy) key, etc., and it is difficult to set them without a certain level of knowledge, and the process can be complicated.

[0042]

Therefore, in the image projection system S of this embodiment, a wireless setting information storage unit is provided in the wireless device 1 to store wireless setting information, so that the wireless setting information is automatically configured. Moreover, encryption keys and the like are changed at predetermined times to improve confidentiality.

[0043]

Here, a procedure for setting up wireless communication in image projection system S is briefly described. FIG. 2 is a diagram to illustrate a procedure for setting up wireless communication in this embodiment.

[0044]

As shown in FIG. 2(a), the USB connector 105 of the wireless device 1 is connected to the USB connector 201 of the remote control device 2. When the remote control device 2 detects that the wireless device 1 has been connected via the USB connector 201, in the wireless device 1, wireless setting information required for communication with the wireless unit of the image projection device 3 is written into the wireless setting information storage unit of the wireless device 1 via the USB connector 201. At this time, the writing lamp 150 (see FIG. 3) of the wireless device 1 flashes to notify the user that the wireless setting information is being written. In addition, the wireless setting information to be written to the wireless device 1 is generated in the remote control device 2.

[0045]

The timing for the remote control device 2 to write the wireless setting information to the wireless device 1 can be when the USB connector 105 of the wireless device 1 is connected to the USB connector 201 of the remote control device 2, or when a start-up control button 231 (see FIG. 4) described below that is provided on the remote control device 2 is operated. The start-up control button 231 is a button for issuing start and stop instructions to the image projection device 3, and the remote control device 2 alternately issues start and stop instructions to the image projection device 3 each time the start-up control button 231 is operated. However, the remote control device 2 may be provided with a start-up control button for issuing a start-up instruction and a stop control button for issuing a stop instruction.

[0046]

Further, if the wireless device 1 is not a specific device, the wireless setting information is not written. This is to avoid the possibility of the image projection system S becoming unstable due to an inferior, non-genuine (copy, etc.) wireless device 1 if writing is allowed regardless of the device connected, and it is therefore possible to use only dedicated devices as wireless devices. Whether or not the connected device is a dedicated wireless device 1 can be determined by the image projection device 3 reading from the device the identification information assigned to the device and, for example, this can be determined by detecting that the part indicating the manufacturer in the identification information is specific information.

[0047]

When writing of the wireless setting information to the wireless device 1 is completed, the writing lamp 150 stops flashing, and as shown in FIG. 2(b), the USB connector 105 of the wireless device 1 is removed from the remote control device 2 and is then connected to the USB connector 401 of the computer device 4

[0048]

When the USB connector 105 of the wireless device 1 is connected to the USB connector 401 of the computer device 4, the computer device 4 installs a device driver program (hereinafter abbreviated as “device driver”), a wireless setting application program (hereinafter abbreviated as “wireless setting application”), and an image transfer application program (hereinafter abbreviated as “image transfer application”) stored in the program storage unit of the wireless device 1. The control unit of the computer device 4 executes the wireless setting application and requests the wireless device 1 to output the wireless setting information written by the remote control device 2. The control unit of the wireless device 1 retrieves the wireless setting information from the wireless setting information storage unit of the wireless device 1 and outputs this wireless setting information to the computer device 4 via the USB connector 105. The computer device 4 acquires the wireless setting information output from the wireless device 1 and sets this wireless setting information in the wireless communication unit of the wireless device 1 using a device driver. The wireless device 1 is thus able to communicate with the wireless unit of the image projection device 3 based on the wireless setting information set by the wireless communication unit, in other words, the wireless setting information written by the remote

control device 2. In addition, the control unit of the computer device 4 functions as an image transmission means that transmits image data to the image projection device 3 via the wireless communication unit by executing an image transfer application.

[0049]

On the other hand, the remote control device 2 notifies the image projection device 3 of the wireless setting information written in the wireless device 1 by infrared communication. The image projection device 3 receives the wireless setting information notified from the remote control device 2 using the infrared light receiving unit 310 and sets it in the wireless section of its own device. In this way, communication between the remote control device 2 and the image projection device 3 is carried out using infrared rays, which makes it possible to prevent eavesdropping by third parties. It should be noted that, here, the communication between the remote control device 2 and the image projection device 3 is infrared communication, but it may also be wireless communication using wireless signals, or radio communication using radio signals. That is, the remote control device 2 has a wireless transmission that transmits wireless signals, and the image projection device 3 has a wireless receiver that receives the wireless signals from the remote control device 2. In the present embodiment, infrared communication is described as an example of wireless communication.

[0050]

The timing for notifying the image projection device 3 of the wireless setting information from the remote control device 2 can be when the information transmission button 237 (see FIG. 4) described below is operated, or when the USB connector 105 of the wireless device 1 is removed from the USB connector 201 of the remote control device 2, or when the start-up control button 231 provided on the remote control device 2 is operated, etc.

[0051]

In this way, the remote control device 2 writes the wireless setting information to the computer device 4 via the wireless device 1 and notifies the image projection device 3 via wireless communication such as infrared communication, and so the user can easily match the wireless setting information of the image projection device 3 and the wireless device 1, and wireless communication is possible between the computer device 4 connected to the wireless device 1 and the image projection device 3 while increasing confidentiality.

[0052]

Subsequently, as shown in FIG. 2(c), image data is sent from the computer device 4 to the image projection device 3 via the wireless device 1 by executing an image transfer application on the computer device 4, and the image projection device 3 projects an image based on the image data onto a screen.

[0053]

The wireless setting information set in the wireless device 1 by the remote control device 2 includes an effective time for which a wireless unit (a wireless communication unit 107 described below) of the wireless device 1 is enabled. The image transfer application on the computer device 4 reads the effective time and limits the time during which wireless communication can be performed by the wireless section of the wireless device 1. That is, when the image transfer application determines that this effective time has elapsed, the function of the wireless communication unit is stopped.

[0054]

The image transfer application of the computer device 4 has the ability to receive time information transmitted from the image projection device 3, and determines whether an effective time has elapsed based on this time information and the effective time retrieved from the wireless device 1. If it is determined that an effective time has elapsed, the function of the wireless communication unit of the wireless device 1 is stopped.

[0055]

Furthermore, when the image projection device 3 receives the wireless setting information by an infrared signal from the remote control device 2, it puts its own wireless unit into an operating state, and then determines whether or not wireless communication with the computer device 4 is in progress via the wireless unit, and when the state in which it is determined that wireless communication with the computer device 4 is not in progress continues for a certain period of time, it puts its own wireless unit into a non-operating state. It should be noted that the image projection device 3 being in wireless communication with the computer device 4 does not only include a state in which image data is being transmitted from the computer device 4 to the image projection device 3, but also includes a state in which a wireless link is established between the computer device 4 and the image projection device 3.

[0056]

However, it is not preferable from the viewpoint of security if the wireless setting information that the remote control device 2 writes to the wireless device 1 is always constant. In addition, there is a risk that unintended image data may be transmitted from the computer device 4 to the image projection device 3 if the wireless device 1 is forgotten to be removed. Therefore, the remote control device 2 updates at least the encryption key in the wireless setting information.

[0057]

That is, the remote control device 2 is configured to be able to update the wireless setting information, and it is possible to increase the confidentiality of wireless communication between the computer device 4 to which the wireless device 1 is connected and the image projection device 3. The timing for the remote control device 2 to update the wireless setting information can be when the wireless device 1 is connected to the remote control device 2, or when the start-up control button 231 provided on the remote control device 2 is operated.

[0058]

Incidentally, when transmitting image data from multiple computer devices 4 to an image projection device 3, it is necessary to write wireless setting information to multiple wireless devices 1. However, if the wireless setting information is updated when the wireless device 1 is connected to the remote control device 2, different wireless setting information will be written to the multiple wireless devices 1.

[0059]

Therefore, the remote control device 2 is made capable of setting the number of times the same wireless setting information can be written to the device. Methods for setting the number of times in this way include a method in which the remote control device 2 sets the number of times the update button 232 is operated continuously, and a method in which the number of times the writes are set using the cross key 233 or the like instead of the update button 232.

[0060]

(Description of the configuration and operation of each device)

The image projection system S configured above will be described in more detail in its configuration and operation. Hereinafter, specific configurations and operations of the wireless device 1, the remote control device 2, the image projection device 3, and the computer device 4 in the embodiment of the present invention will be described.

[0061]

(Regarding the wireless device 1)

First, the configuration and operation of the wireless device 1 will be described. FIG. 5 is a block diagram of the wireless device 1, FIG. 6 is a functional block diagram of the wireless device 1, and FIG. 7 is a block diagram of the memory controller function unit.

[0062]

As shown in FIG. 5, the wireless device 1 is composed of a CPU (Central Processing Unit) 101, a RAM (Random Access Memory) 102, a ROM (Read Only Memory) 103, a flash memory 104, a USB connector 105, a USB connection circuit 106, a wireless communication unit 107, an operation unit 108, an alarm unit 109, etc., and is designed to be compact and portable.

[0063]

The CPU 101 functions as a control for the wireless device 1 by reading and executing a control program stored in the ROM 103. In addition, the ROM 103 stores identification information (e.g., a MAC address), and under the control of the CPU 101, this identification information can be transmitted to the remote control device 2 or the computer device 4 via the USB connector 105.

[0064]

RAM 102 is used by the CPU 101 as working memory, etc. The flash memory 104 also functions as a wireless setting information storage unit that stores wireless setting information and the like.

[0065]

Here, the wireless setting information includes the wireless LAN standard type (band), network mode, network name (ESSID), wireless channel, authentication level, encryption level, data encryption method, encryption key, IP address, subnet mask, DNS address, effective period, etc., as shown in FIG. 8. There are two network modes: infrastructure mode, which requires an access point, and ad-hoc mode, which does not require an access point. Here, the ad-hoc mode is set so that direct wireless communication can be performed between the wireless device 1 and the image projection device 3.

[0066]

The USB connector 105 is a general purpose USB connector and can be connected to the USB connectors 201, 401 of the remote control device 2 and the computer device 4. When the USB connector 105 is connected to the USB connector 201 of the remote control device 2 or the USB connector 401 of the computer device 4, the CPU 101 transmits and receives data to and from these devices via the USB connection circuit 106. The USB connection circuit 106 is an interface circuit for transmitting and receiving data in accordance with the USB standard.

[0067]

When this USB connector 105 is connected to the remote control device 2, it is controlled by the CPU 101 so that wireless setting information can be written to the flash memory 104 from the remote control device 2. In addition, when the USB connector 105 is connected to the computer device 4, the CPU 101 controls the wireless setting information written in the flash memory 104 so that it can be read by the computer device 4.

[0068]

The wireless communication unit 107 has an antenna 110, an RF unit 111, and a baseband unit 112, and is capable of transmitting and receiving data based on the wireless LAN standard. The RF unit 111 and the baseband unit 112 are configured by a WLAN (Wireless Local Area Network) chip.

[0069]

When the USB connector 105 is connected to the computer device 4, the wireless communication unit 107 communicates with the wireless unit of the image projection device 3 using settings based on the wireless setting information written from the remote control device 2. Here, the wireless setting information written from the remote control device 2 is first read into the computer device 4, and the wireless setting information thus read is then transmitted from the computer device 4 to the wireless device 1, causing the wireless communication unit 107 to perform wireless communication according to the wireless setting information. Alternatively, the CPU 101 reads the wireless setting information from the remote control device 2 and causes the wireless communication unit 107 to perform wireless communication according to the wireless setting information. Here, the former method will be explained as an example. In the former method, the CPU 101 functions as an output means for outputting the wireless setting information written by the remote control device 2 to the computer device 4.

[0070]

The operation unit 108 has an image transfer stop switch 140, a communication time extension button 141, a reset button 142 (see FIG. 3), etc., and when these buttons are operated, the CPU 101 detects the operation and performs processing according to the detected operation.

[0071]

The image transfer stop switch 140 is a slide switch that serves as an image transmission stop operation unit for instructing the image projection device 3 to stop transmitting the image data, and is a changeover switch that switches between an image stop ON mode and an image stop OFF mode. When the image transfer stop switch 140 is operated to the image stop ON mode side while connected to the computer device 4 via the USB connector 105, the CPU 101 notifies the computer device 4 of this information. When the CPU 405 of the computer device 4 receives the information, it executes an image transfer application and transmits a request to the image projection device 3 via the wireless communication unit 107 to project a specific image (here, a black screen image) on the image projection device 3.

[0072]

When the image transfer stop switch 140 is operated to the image stop ON mode side while connected to the computer device 4 via the USB connector 105, the CPU 101 may transmit a request to the image projection device 3 via the wireless communication unit 107 to project a specific image, without transmitting data input from the computer device 4 to the image projection device 3.

[0073]

The communication time extension button 141 is an operation button (corresponding to an example of an effective time extension means) for changing the effective time of the wireless setting information stored in the flash memory 104, and is a push-button switch. When the communication time extension button 141 is operated while connected to the computer device 4 via the USB connector 105, the CPU 101 performs processing to extend the effective time for wireless communication with the image projection device 3. This process is carried out by the CPU 101 notifying the computer device 4 that the communication time extension button 141 has been operated to the image stop ON mode side, and the computer device 4 extends the effective time extracted from the wireless device 1. That is, when the computer device 4 performs wireless communication with the image projection device 3, it reads out the effective time written in the flash memory 104 of the wireless device 1 and stores it in the memory unit of the computer device 4. In this way, it is determined whether the stored effective time has elapsed. Moreover, the effective time is extended by changing the stored effective time.

[0074]

The effective period may be extended by extracting the effective period from the wireless setting information stored in the flash memory 104 by the CPU 101, adding an extension period (e.g., one hour) to this effective period, and overwriting the effective period stored in the flash memory 104. In this case, the CPU 405 of the computer device 4 reads the effective period from the wireless device 1 every time it determines whether the effective period has elapsed.

[0075]

The notification unit 109 has a writing lamp LED 150, an image transfer lamp 151, an alarm lamp 152 (see FIG. 3), etc., and the CPU 101 lights or flashes these lamps depending on the situation. For example, when the wireless setting information is being written to the flash memory 104, the writing lamp LED 150 flashes. In addition, when image data is being sent from the computer device 4 to the image projection device 3, the image transfer lamp 151 flashes. Also, when the wireless device 1 is in an abnormal state, the alarm lamp 152 flashes. These lamps are composed of LEDs or the like.

[0076]

Here, FIG. 6 shows a functional block diagram of the wireless device 1. As shown in FIG. 5, the wireless device 1 has a USB interface function unit 120, a memory controller function unit 121, a USB hub function unit 122, and a wireless communication function unit 123.

[0077]

The USB interface function unit 120 corresponds to the USB connector 105 and the USB connection circuit 106 in FIG. 5, and transmits and receives data between the image projection device 3 and the computer device 4 based on the USB standard.

[0078]

The memory controller function unit 121 corresponds to the CPU 101 and flash memory 104 in FIG. 5, and includes a removable recognition unit 124 that causes the flash memory 104 to function as a USB memory that stores wireless setting information, and a CD-ROM recognition unit 125 that causes the flash memory 104 to function as a CD-ROM for transferring an image transfer program to the computer device 4, and the USB hub function unit 122 causes the image projection device 3 and the computer device 4 to recognize the wireless device 1 as a USB memory and a CD-ROM, respectively.

[0079]

The wireless communication function unit 123 corresponds to the wireless communication unit 107 in FIG. 5, and is controlled by the driver software installed on the computer device 4 when the USB connector 105 of the wireless device 1 is connected to the computer device 4.

[0080]

As shown in FIG. 7, the memory controller function unit 121 has a removable recognition unit 124 and a CD-ROM recognition unit 125, and the physical memory unit (part of the flash memory 104) stores the multiple application programs 130, such as a wireless setting application and an image transfer application, a device driver 131, an installer program 132, and the wireless setting information 133. Furthermore, the flash memory 104 as a physical memory unit may be composed of one flash memory or multiple flash memories.

[0081]

When the image transfer application is installed on the computer device 4, it causes the computer device 4 to function as an image transmission means that controls the wireless device 1 and transmits the image data from the computer device 4 to the image projection device 3. Further, when this wireless setting application is installed on the computer device 4, it causes the computer device 4 to execute the function of setting the wireless setting information, etc., on the wireless device 1.

[0082]

The device driver 131, when installed in the computer device 4, causes the computer device 4 to execute the function of controlling the wireless communication unit 107 of the wireless device 1.

[0083]

The installer program 132 is executed by the computer device 4 to install the image transfer application and the device driver 131 into the computer device 4.

[0084]

(Regarding the remote control device 2)

Next, the configuration and operation of the remote control device 2 will be described. FIG. 9 is a block diagram of a remote control device 2.

[0085]

As shown in FIG. 9, the remote control device 2 includes a USB connector 201, a USB host controller 202 that communicates with other devices via the USB connector 201 based on the USB standard, an infrared transmission unit 203 (corresponding to an example of a wireless transmission unit) that transmits the infrared signals to the image projection device 3, an infrared control unit 204 that controls the infrared transmission unit 203, operation buttons 205 that are operated by the user, an input interface 206 that notifies the CPU (described below) that the operation buttons 205 have been operated by the user, a display unit 207 that displays various information, and a memory unit used as a working memory, etc. The remote control device 2 includes a memory 208, a clock circuit 209 which is a timekeeping means for measuring the current time, etc., a CPU 210 which controls the entire remote control device 2, and a secondary storage device 211 which functions as a program storage unit that stores a control program for the remote control device 2 and a function as a wireless setting information storage unit that stores the wireless setting information required for communication with the image projection device 3 via the wireless communication unit 107. The USB host controller 202, the infrared control unit 204, the input interface 206, the display unit 207, the memory 208, the clock circuit 209, the CPU 210, and the secondary storage device 211 are connected by a bus 216.

[0086]

The CPU 210 functions as a control unit of the remote control device 2 by reading and executing the control program stored in the secondary storage device 211. For ease of explanation, the secondary storage device 211 is described here as a single storage means, but it can be composed of multiple memories (ROM, RAM, etc.).

[0087]

Here, the CPU 210 functions as a control unit of the remote control device 2, and as a wireless setting information generating means for generating the wireless setting information required for wireless communication between the wireless device 1 connected to the computer device 4 and the image projection device 3, and as a wireless setting information writing means for writing the wireless setting information to the wireless device 1 at a predetermined timing. Here, the timing that triggers the generation (including updating) and writing of the wireless setting information is (a) when the CPU 210 detects that the USB connector 105 of the wireless device 1 has been connected to the USB connector 201, (b) when the CPU 210 detects that the start control button 231 provided on the remote control device 2 has been operated, or (c) when the CPU 210 detects that the update button 232 provided on the remote control device 2 has been operated, and which of these is selected is determined by the user's settings in the secondary storage device 211 through operation of the left and right arrow keys 234, 235, the enter key 236, etc. It should be noted that it is also possible to set the operation to occur at both timings (b) and (c). In addition, instead of the timing (a) above, the timing that triggers the generation of wireless setting information may be when the CPU 210 detects that the USB connector 105 of the wireless device 1 has been removed from the USB connector 201.

[0088]

Furthermore, the CPU 210, as a control unit of the remote control device 2, functions as a notification means for notifying the image projection device 3 of the wireless setting information written to the wireless device 1. The timing for notifying the wireless setting information includes (a) when the CPU 210 updates the wireless setting information, (b) when the CPU 210 detects that the information transmission button 237 provided on the remote control device 2 has been operated, and which one is selected is determined by the user's setting in the secondary storage device 211 by operating the left and right arrow keys 234, 235, the enter key 236, etc. When notifying the wireless setting information, the CPU 210 also notifies the current time information. The control unit 303 of the image projection device 3 adjusts the clock circuit 305 based on the current time information notified from the remote control device 2.

[0089]

In addition, the CPU 210, as a control unit of the remote control device 2, functions as a write count setting means together with the operation button 205 to set the number of times the same wireless setting information can be written to the wireless device 1. In other words, the wireless setting information is not updated until the wireless setting information is written by the wireless setting information writing means more than the set number of times, and the wireless setting information is controlled to be updated when the set number of times of writing is exceeded. For example, when the USB connector 105 of the wireless device 1 is connected to the USB connector 201 of the remote control device 2 while the update button of the remote control device 2 is being operated, the CPU 210 increases the number of writes to the wireless device 1 by one (see FIG. 10). Furthermore, when the CPU 210 has updated the wireless setting information the set number of times, it displays a warning on the display unit 207 or issues a warning from an alarm output unit (not shown), and also functions as an update determination means that updates the wireless setting information if the hold button 238 (described below) is not operated within a predetermined time thereafter.

[0090]

Here, the wireless setting information includes, as described above, the wireless LAN standard type, network mode, network name, wireless channel, authentication level, encryption level, data encryption method, encryption key, IP address, subnet mask, DNS address, effective period, etc.

[0091]

The USB connector 201 may be connected to the USB connector 105 of the wireless device 1. The CPU 210 detects whether the USB connector 105 of the wireless device 1 is connected to the USB connector 201 via the USB host controller 202, and if connected, transmits and receives data to and from the wireless device 1.

[0092]

As shown in FIG. 4, the operation button 205 is provided at a location on the image projection device 3 where the user can operate it, that is, at an appropriate location on the outer wall surface of the housing, and when the user operates this operation button 205, the CPU 210 executes control according to the operation content. The operation buttons 205 include the above-mentioned start-up control button 231 (corresponding to an example of the start-up control instruction unit), update button 232 (corresponding to an example of the update operation unit), cross key 233, left arrow key 234, right arrow key 235,

enter key 236, an information transmission button 237 for transmitting wireless setting information to the image projection device 3, a hold button 238 as an update suppression means for suppressing updates to the wireless setting information, and a wireless information setting button 239 for writing the wireless setting information to the wireless device 1.

[0093]

Here, the processing operation of the wireless setting information in the remote control device 2 will be specifically explained with reference to the flowcharts of FIG. 10 to 12. FIG. 10 is a flowchart of the processing of wireless setting information in the remote control device 2, FIG. 11 is a flowchart of the updating processing of wireless setting information in the remote control device 2, and FIG. 12 is a flowchart of the writing processing of wireless setting information in the remote control device 2.

[0094]

First, with reference to FIG. 10, an example of a basic operation of processing wireless information settings in the remote control device 2 will be described. This operation is an example of an operation when the remote control device 2 is configured to update and write the wireless setting information when the USB connector 105 of the wireless device 1 is connected to the USB connector 201, and is also configured to notify the image projection device 3 of the wireless setting information when the information transmission button 237 is operated.

[0095]

As shown in FIG. 10, the CPU 210 of the remote control device 2 detects whether a USB device is connected (step S100). That is, the CPU 210 detects whether the USB connector of the USB device has been inserted into the USB connector 201. In this process, when the connection of the USB device is detected (step S100: YES), the CPU 210 moves to the process of step S101.

[0096]

In step S101, the CPU 210 obtains identification information for the USB device. That is, the CPU 210 requests the USB device to transmit identification information via the USB connector 201, and acquires the identification information transmitted from the USB device in response to this request. The identification information is described here, for example, with the MAC address assigned to the USB device.

[0097]

Next, the CPU 210 determines whether the identification information of the inserted USB device is identification information held by the wireless device 1 (step S102). Here, the MAC address, which is the identification information, consists of the upper 24 bits that represent the vendor ID, and the lower 24 bits that represent a serial number assigned to each vendor. The CPU 210 determines whether the MAC address of the USB device is the MAC address of the wireless device 1 by determining whether the MAC address of the USB device is a specified vendor ID and a specified serial number.

[0098]

In this process, if it is determined that the inserted USB device is wireless device 1 (step S102: YES), the CPU 210 transitions the process to step S103. On the other hand, if it is determined that the inserted USB device is not the wireless device 1 (step S102: NO), the CPU 210 proceeds to step S100.

[0099]

In step S103, the CPU 210 detects whether the hold button 238 has been operated within a predetermined time after the wireless device 1 was connected. If it is determined that the hold button 238 has not been operated (step S103: NO), the CPU 210 updates the wireless setting information stored in the secondary storage device 211 (step S104). This process is shown in the flowchart of FIG. 11 and will be described later.

[0100]

When the processing of step S104 is completed, or when it is determined in step S103 that the hold button 238 has been operated (step S103: YES), the CPU 210 performs a process of writing the wireless setting information to the wireless device 1 (step S105). This process is shown in the flowchart of FIG. 12 and will be described below.

[0101]

The CPU 210 then detects whether the information transmission button 237 has been operated (step S106). The CPU 210 repeats this process until the information transmission button 237 is operated, and when the information transmission button 237 is operated (step S106: YES), the infrared transmission unit 203 transmits the wireless setting information to the wireless device 1 via infrared rays (step S107).

[0102]

Upon completion of the processing of step S107, the CPU 210 determines whether the remote control device 2 is powered off (step S108). If the CPU 210 determines that the power of the remote control device 2 is off (step S108: YES), it terminates this process, whereas if it determines that the power is not off (step S108: NO), it repeats the process from step S100.

[0103]

In this way, the CPU 210 functions as a notification means that notifies the image projection device 3 of the wireless setting information written to the wireless device 1.

[0104]

Next, the details of the wireless setting information update process in step S104 will be explained in detail with reference to the flowchart in FIG. 11.

[0105]

When the process of updating the wireless setting information is started, the CPU 210 first clears the encryption key of the wireless setting information stored in the secondary storage device 211 (step S110), and then generates an encryption key of the wireless setting information (step S111), and proceeds to step S112.

[0106]

In step S112, the CPU 210 reads the wireless setting information from the secondary storage device 211. The wireless setting information read here includes the network mode, network name (excluding encryption key and the effective time), etc., as shown in FIG. 8. The CPU 210 generates new wireless setting information by adding the encryption key generated in step S108 to the information thus read, and stores the new wireless setting information in the secondary storage device 211, thereby updating the wireless setting information (step S113). Here, the wireless setting information is updated by updating the encryption key, but other encryption information (encryption level, data encryption) may also be updated in addition to the encryption key. Further to these, the band information (IEEE802.11a/b/g) and wireless channels may also be updated.

[0107]

In this way, the CPU 210 functions as a wireless setting information generating means that generates the wireless setting information necessary for wireless communication between the image projection device 3 and the computer device 4.

[0108]

Next, the details of the wireless setting information writing process in step S105 will be explained in detail with reference to the flowchart in FIG. 12.

[0109]

When the process of writing wireless setting information starts, the CPU 210 first makes a writing request to the wireless device 1 to start the process of writing the wireless setting information to the wireless device 1. When this request is received by the wireless device 1, the CPU 210 of wireless device 1 turns on the writing lamp 150 (step S120). Then, the CPU 210 reads the wireless setting information from the secondary storage device 211. The wireless setting information read here includes the network mode, network name (excluding the effective time), etc., as shown in FIG. 8. After that, the CPU 210 obtains the current time information from the clock circuit 209, and further reads the available connection time from the secondary storage device 211. At this time, the CPU 210 calculates the effective time based on the connectable time and the current time. For example, if the connectable time is 2 hours and the current time is 2:30 PM, the effective time is 4:30 PM. The date is also included in the effective period. Next, the CPU starts the process of writing the wireless setting information read from the secondary storage device 211 and the generated effective time to the wireless device 1 as the

wireless setting information (step S121).

[0110]

Thereafter, the CPU 210 waits until the writing is completed (step S122), and when the writing is completed (step S122: YES), it requests the wireless device 1 to turn off the writing lamp 150. When this request is received by wireless device 1, the CPU 101 of wireless device 1 turns off the writing lamp 150 (step S123).

[0111]

In the above embodiment, the encryption key and the effective period are written to the wireless device 1 as separate information, but the effective period may also be embedded in the encryption key. In this case, the CPU 210 generates a random variable, acquires information on the connectable time from the wireless setting information stored in the secondary storage device 211, and calculates the effective time based on the acquired connectable time and the current time information obtained from the clock circuit 209. The CPU 210 then generates an encryption key based on this random variable and the effective time. If this encryption key is, for example, 128 bits, of the 13 characters, the first 7 characters are composed of random variables, and the last 6 characters are composed of the date and the effective time. By configuring it in this way, the image transfer application on the computer device 4 can set the effective time using the encryption key. In addition, the CPU 405 of the computer device 4 can detect the effective time based on the encryption key by executing the image transfer application.

[0112]

As described above, in this embodiment, when the wireless device 1 is connected to the USB connector 201, the CPU 210 of the remote control device 2 writes wireless setting information to the wireless device 1 for wireless communication with the image projection device 3. Furthermore, the confidentiality of wireless communication is improved by updating the encryption key each time the wireless setting information is written to the wireless device 1. However, by operating the hold button, the wireless setting information is prevented from being updated, and the same wireless setting information can be written to multiple wireless devices 1, thereby enabling wireless communication between multiple computer devices 4 and the image projection device 3.

[0113]

It should be noted that as a method of writing the same wireless setting information to a plurality of wireless devices 1, the CPU 210 may function as a write count setting means for setting the number of times that the same wireless setting information can be written to the wireless device 1, and the wireless setting information may not be updated until the wireless setting information has been written more than this number of times. For example, the number of times of writing may be set by using the left and right arrow keys 234, 235 and the enter key 236 or the like. Moreover, after connecting the wireless device 1 to the remote control device 2, the number of times the update button 232 is operated within a predetermined period of time may be set as the number of writes. The number of writes set in this way is stored in the secondary storage device 211. At this time, the CPU 210 may display on the display unit 207 the setting information of the number of times writing and the information of the number of wireless devices 1 to which the wireless setting information has actually been written.

[0114]

Furthermore, in the above embodiment, the remote control device 2 writes the wireless setting information to the wireless device 1 when the wireless device 1 is connected, but the wireless setting information may also be updated when the start-up control button 231 is operated. Below, with reference to FIG. 13, we will explain an example of the operation of updating wireless setting information when the start-up control button 231 is operated on the remote control device 2. FIG. 13 is a flowchart of a process for updating wireless configuration information in a remote control device 2.

[0115]

As shown in FIG. 13, first, the CPU 210 of the remote control device 2 detects whether the start-up control button 231 has been operated (step S130). When the user operates the start-up control button 231, the CPU 210 detects this operation (step S130: YES) and transmits a shutdown command, which is a stop instruction, to the image projection device 3 (step S131). When the image projection device 3 receives the shutdown command from the remote control device 2, it turns off the light source 321 and LCD 323 (described below) in the projection unit 308, and puts the CPU 210 into a quiescent state.

[0116]

Next, the CPU 210 performs an update process of the wireless setting information stored in the secondary storage device 211 (step S132) and transitions the process to step S133. The process of step S132 is similar to that of step S104 described above, and therefore will not be described here.

[0117]

In step S133, the CPU 210 detects whether a USB device is connected, similar to the processing in step S100. In this process, when the connection of the USB device is detected (step S133: YES), the CPU 210 proceeds to the process of step S134.

[0118]

In step S134, the CPU 210 acquires the identification information of the USB device in the same manner as in step S101. Thereafter, the CPU 210 determines whether the identification information of the inserted USB device is the identification information held by the wireless device 1, similar to the processing of step S102 (step S135).

[0119]

In this process, if it is determined that the inserted USB device is wireless device 1 (step S135: YES), the CPU 210 performs a process of writing wireless setting information to the wireless device 1 (step S136). This process is similar to the process of step S105 described above, so the description is omitted.

[0120]

After that, the CPU 210 detects whether the start-up control button 231 has been operated (step S137). When the user operates the start-up control button 231, the CPU 210 detects this operation (step S137: YES), transmits a start-up command to the image projection device 3 (step S138), and further transmits the wireless setting information from the infrared transmission unit 203 to the wireless device 1 by infrared rays (step S139).

[0121]

In the above description, the wireless setting information is updated when the image projection device 3 is shut down, but the wireless setting information may also be updated when the image projection device 3 is started up. In this case, for example, when the start-up control button 231 is operated to start up the image projection device 3, the CPU 210 determines whether or not the wireless device 1 is connected, and if the wireless device 1 is connected, it updates the wireless setting information, sends a start-up command to the image projection device 3, and further sends the wireless setting information to the wireless device 1 via infrared rays.

[0122]

As described above, the remote control device 2 updates the wireless setting information when the start control button is operated, so that the wireless setting information can be updated each time the image projection device 3 is started or stopped, making it possible to update the wireless setting information each time the image projection device 3 is used. Also, in step S137, the CPU 210 may detect whether or not a wireless device 1 other than the wireless device 1 to which the wireless setting information was written has been connected, and when it is determined that another wireless device 1 has been connected, the process proceeds to step S136, where the wireless setting information is written to this other wireless device. By doing this, the same wireless setting information can be written to multiple wireless devices 1. It should be noted that the same wireless setting information here means that the wireless setting information shown in FIG. 8 is the same except for the IP address.

[0123]

In addition, in the above description, the remote control device 2 updates the wireless setting information when the wireless device 1 is connected to the remote control device 2 or when the start-up control button 231 is operated, but this may be done manually. That is, the remote control device 2 may be provided with an update button 232 that instructs the operation of generating and updating at least an encryption key of the wireless setting information, and each time the update button 232 is operated, at least an encryption key of the wireless setting information may be generated and updated.

[0124]

(Regarding the image projection device 3)

As shown in FIG. 14, the image projection device 3 includes an infrared receiving unit 301 (corresponding to an example of a wireless receiving unit) that performs infrared communication with the remote control device 2, a control panel 302 that allows the user to perform various operations, a control unit 303 that controls the entire image projection device 3, a non-volatile memory unit 304 for storing information such as wireless setting information, a clock circuit 305 that serves as a timekeeping means, a wireless unit 306 that performs wireless communication conforming to the wireless LAN standard, a video signal input circuit 307 that inputs a video signal from the outside, and a projection unit 308 that projects an image based on the video signal input via the video signal input circuit 307 or image data received via the wireless unit 306, all of which are built into the housing.

[0125]

The infrared receiving unit 301 has an infrared light receiving unit 310 that receives an infrared signal transmitted from the remote control device 2, and an infrared control unit 311 that notifies the control unit 303 of the infrared signal received by the infrared light receiving unit 310. The infrared light receiving unit 310 may be an infrared LED or the like.

[0126]

The control panel 302 is provided at a location on the projection device where the user can operate it, that is, at an appropriate location on the outer wall surface of the housing, and when the user operates this control panel 302, the control unit 303 executes control according to the operation content.

[0127]

The control unit 303 has a built-in CPU, ROM, RAM, etc., and functions as a control unit by the CPU reading and executing a program pre-stored in the ROM. The RAM can also be used as a working memory, etc. The control unit 303 controls the wireless unit 306 to receive image data transmitted by wireless communication from the computer device 4, and projects an image corresponding to the received image data by the projection unit 308. In addition, when the control unit 303 receives wireless setting information from the remote control device 2 via the infrared receiving unit 301, it sets the wireless unit 306 to an operating state, and then determines whether or not wireless communication is in progress with the computer device 4 via the wireless unit 306, and when the state in which it is determined that wireless communication is not in progress with the computer device 4 continues for a certain period of time, it sets the wireless unit 306 to a non-operating state.

[0128]

The non-volatile memory 304 is composed of, for example, a flash memory, and stores the wireless setting information, etc.

[0129]

The wireless unit 306 includes a wireless circuit 312 consisting of an antenna and an RF (wireless) unit that transmits and receives wireless signals via the antenna, and a wireless control unit 313 that processes the wireless signals transmitted and received by the wireless circuit 312 to convert them into wireless signals that comply with the wireless LAN standard. The wireless control unit 313 here is composed of a microcomputer.

[0130]

The video signal input circuit 307 is used to input video signals such as a composite video signal (for example, an NTSC video signal) or a component video signal (for example, an RGB signal) from the outside via a cable.

[0131]

The projection unit 308 includes a lamp driving circuit 320, a light source 321, an illumination optical system 322, a transmissive liquid crystal panel 323 (hereinafter referred to as “LCD 323”), an imaging optical system 324, an image processing circuit 325, an LCD driving circuit 326, and a focus adjustment circuit 327.

[0132]

The light source 321 is composed of a lamp or the like, and is turned on and emits light based on a signal output from a lamp driving circuit 320 controlled by the control unit 303. The light emitted by the light source 321 is irradiated as illumination light onto the LCD 323 by the illumination optical system 322.

[0133]

Based on the control of the control unit U, the image processing circuit 325 performs processing such as adding or modifying signals to the video signal input to the video signal input circuit 307 or image data received by the wireless unit 306. The image signal thus processed and generated is input to an LCD drive circuit 326.

[0134]

The LCD 323 is driven by the LCD drive circuit 326 and displays images on its display surface. The image displayed in this way is emitted as light from the LCD 323 by illumination light from the illumination optical system 322. This emitted light then passes through the imaging optics 324 and the projection opening in the housing, and is projected onto a screen (projection surface). In this way, the image displayed on the LCD 323 is configured to be projected onto the screen. It should be noted that the focus adjustment mechanism allows the focus of the image projected on the screen to be adjusted.

[0135]

Here, we will explain in detail how to set wireless information in the image projection device 3 with reference to the drawings. FIG. 15 is a flowchart showing an example of the basic operation of the image projection device 3.

[0136]

First, with reference to FIG. 15, we will explain an example of the basic operation of the image projection device 3.

[0137]

As shown in FIG. 15, the control unit 303 of the image projection device 3 determines whether or not a start-up command has been received from the remote control device 2 (step S200). This determination continues until a start-up command is received, and when a start-up command is received (step S200: YES), the control unit 303 starts the operation of the light source 321, LCD 323, etc. of the projection unit 308. At this time, the control unit 303 maintains the state in which the wireless unit 306 is stopped.

[0138]

Next, the control unit 303 initializes the elapsed time in the elapsed time storage area set in the internal RAM to 0 (step S201), and transitions to step S202.

[0139]

In step S202, the control unit 303 determines whether or not wireless setting information has been received from the remote control device 2 via the infrared receiving unit 301. In this process, if it is determined that wireless setting information has been received (step S202: YES), the received wireless setting information is stored in non-volatile memory 304 and the wireless function is turned ON (step S203). That is, the control unit 303 operates the wireless unit 306 to enable wireless communication with the computer device 4. Thereafter, when the control unit 303 receives image data from the computer device 4 via the wireless unit 306, until the operation of the wireless unit 306 is stopped, it controls the projection unit 308 to project an image corresponding to the received image data onto a screen (projection surface).

[0140]

Next, the control unit 303 starts counting the elapsed time (step S204). That is, the control unit 303 starts a process of incrementing the elapsed time in the elapsed time storage area every predetermined time (e.g., 1 second), and then proceeds to the process of step S205.

[0141]

In step S205, the control unit 303 acquires the elapsed time stored in the elapsed time storage area. Then, the control unit 303 determines whether or not a wireless connection is established between the wireless unit 306 and the computer device 4 (step S206). In this process, if it is determined that a wireless connection is in progress (step S206: YES), the control unit 303 resets the elapsed time stored in the elapsed time storage area to 0 (step S207). On the other hand, if it is determined that a wireless connection is not in progress (step S207: NO), the control unit 303 determines whether the elapsed time stored in the elapsed time storage area has exceeded a predetermined time (e.g., one hour) (step S208).

[0142]

If it is determined in step S208 that the elapsed time has not exceeded the predetermined time (step S208: NO), the control unit 303 returns the process to step S204. On the other hand, if it is determined that the elapsed time exceeds the predetermined time (step S208: YES), the control unit 303 turns off the wireless function (step S209). That is, the control unit 303 stops the operation of the wireless unit 306 and proceeds to processing in step S210.

[0143]

In step S210, the control unit 303 discards (clears) the wireless setting information stored in the non-volatile memory 304.

[0144]

When the processing of step S210 is completed, the control unit 303 determines whether or not a shutdown command has been received from the remote control device 2 (step S211). If the control unit 303 determines that a shutdown command has been received (step S211: YES), it terminates this process, whereas if it determines that a shutdown command has not been received (step S211: NO), it repeats the process from step S200.

[0145]

As described above, when the control unit 303 of the image projection device 3 in this embodiment receives the wireless setting information from the remote control device 2 via the infrared receiving unit 301, it puts the wireless unit 306 into an operating state, and then determines whether or not wireless communication is in progress with the computer device 4 via the wireless unit 306, and when the state in which it is determined that wireless communication is not in progress with the computer device 4 continues for a certain period of time, it puts the wireless unit 306 into a non-operating state. Therefore, if there is no communication between the computer device 4 and the image projection device 3 for a predetermined period of time or longer, it can be determined that one presentation has ended, making it possible to change the encryption key for each presentation.

[0146]

In this manner, the wireless unit 306 is stopped if the time during which no wireless connection is established continues, but the wireless unit 306 may be operated regardless of the state in which no wireless connection is established. For example, without performing step S201 and steps S204 to S210, after receiving the shutdown command in step S211, the wireless setting information is discarded (similar processing to step S210), and the wireless function is turned OFF (similar processing to step S209).

[0147]

(Regarding the computer device 4)

Next, the computer device 4 will be described with reference to the drawings. FIG. 16 is a block diagram of a computer device 4 in accordance with this embodiment.

[0148]

As shown in FIG. 16, the computer device 4 includes a USB connector 401, a USB bus controller 402, an LCD 403 as a display unit, a graphics controller 404 that performs processing for displaying on the LCD 403, a CPU 405 that controls the entire computer device 4, a memory 406 that stores the programs and various parameters, and a first bus 407 that connects these together.

[0149]

Furthermore, the computer device 4 is equipped with a LAN interface 410 compatible with 10BASE-T and 100BASE-TX, a mouse 411, a keyboard 412, a CD/DVD drive 413, a floppy (registered trademark) disk drive 414, a hard disk 415, and a second bus 416 connecting these. It further includes a bus controller 408 that controls data exchange between the first bus 407 and the second bus 416.

[0150]

The USB connector 401 and USB bus controller 402 process data transmission and reception based on the USB standard with USB devices such as the wireless device 1 and an external keyboard.

[0151]

The memory 406 also stores an operating system (OS) program and a presentation application program. When the computer device 4 is powered on, the CPU 405 first reads and executes the OS program from the memory 406, thereby enabling the computer device 4 to execute basic functions such as input/output functions for the mouse 411 and keyboard 412, and memory management for the memory 406 and hard disk 415.

[0152]

Then, while this OS program is being executed by the CPU 405, computer programs such as presentation application programs are read from the memory 406 and executed. As described below, when a device driver or an application program for image transfer is installed, these are also executed by the CPU 405 to perform various controls.

[0153]

An example of a basic operation for setting wireless information in the computer device 4 configured as above will be described. FIG. 17 is a flowchart showing the operation of setting wireless information in computer device 4, which is controlled by CPU 405, which is the control unit of computer device 4.

[0154]

As shown in FIG. 17, the CPU 405 of the computer device 4 determines whether or not the wireless device 1 is connected (step S300). To determine whether or not wireless device 1 is connected, it is determined whether or not a USB device is connected to USB connector 401, and when a USB device is connected, it is further determined whether this USB device has specific identification information.

[0155]

In this process, if it is determined that wireless device 1 has been inserted (step S300: YES), the CPU 405 starts the auto-run operation process (step S301). This auto-run operation process corresponds to steps S320 to S327 in FIG. 18 and will be described later.

[0156]

When the auto-run operation process is completed, the CPU 405 determines whether the image transfer application is running normally (step S302). In this process, if the CPU 405 determines that the image transfer application is running normally (step S302: YES), it transitions to step S303. The operations in steps S303 to S309 are executed by the CPU 405 functioning as an image transmitting unit or the like by operating in accordance with an image transfer application.

[0157]

In step S303 , the CPU 405 issues a request via the USB connector 401 to turn on the image transfer lamp 151 of the wireless device 1. Upon receiving this lighting request, the CPU 101 of the wireless device 1 lights the image transfer lamp 151.

[0158]

Next, the CPU 405 starts transmitting the image data corresponding to the screen (hereinafter referred to as the “display screen”) displayed on the LCD 403, which is the display unit of the computer device 4, to the image projection device 3 (step S304). In this process, the CPU 405 transmits display image data to the wireless device 1 via the USB connector 401, which then transmits the data from the wireless device 1 to the image projection device 3 via wireless communication. When the image projection device 3 receives the display image data transmitted in this manner, it projects an image based on the display image data onto a screen.

[0159]

In this manner, while the display image data is being transmitted, the CPU 405 performs a timeout process (step S305). This timeout process corresponds to steps S330 to S334 in FIG. 19, and will be described later.

[0160]

When this timeout process ends,the CPU 405 determines whether the effective time has elapsed (step S306). This determination is made as to whether it has been determined in step S331 described below that the effective time has elapsed or that the effective time has not elapsed.

[0161]

In this process, when it is determined that the effective time has not elapsed (step S306: NO), the CPU 405 determines whether the wireless device 1 has been removed from the computer device 4 (step S307). In this process, if it is determined that the wireless device 1 has been removed from the computer device 4 (step S307: YES), the CPU 405 displays an error message on the LCD 403 (step S308) and terminates execution of the image transfer application (step S209). On the other hand, if it is determined that the wireless device 1 has not been removed from the computer device 4 (step S307: NO), the CPU 405 transitions the process to step S305.

[0162]

In step S302, if the image transfer application is not operating normally (step S302: NO), or if it is determined in step S306 that the effective time has elapsed (step S306: YES), or if the processing of step S309 has ended, the CPU 405 ends this processing.

[0163]

Next, the auto-run operation processing in step S301 will be explained with reference to FIG. 18. FIG. 18 is a flowchart of the auto-run process in the computer device 4. This auto-run operation works by having the CPU 405 recognize the wireless device 1 as a CD-ROM when the wireless device 1 is connected, using the function of the CD-ROM recognition unit 125 of the wireless device 1, and automatically reading the information of the wireless device 1.

[0164]

As shown in FIG. 18, the CPU 405 determines whether the device driver 131 is not installed on the self-computer device 4 (step S320). In this process, if it is determined that the device driver 131 is not installed (step S320: YES), the CPU 405 reads the device driver 131 for controlling the wireless communication unit 107 stored in the flash memory 104 of the wireless device 1 via the USB connector 401, and performs an installation process of this device driver 131 on its own computer device 4 (step S321).

[0165]

When the processing of step S321 is completed, or when it is determined in step S320 that the device driver has been installed (step S320: NO), the CPU 405 launches a wireless setting application (step S322) and reads the wireless setting information stored in the wireless device 1 via the USB connector 401 (step S323).

[0166]

The CPU 405 then configures the WLAN (Wireless LAN) network by executing the wireless configuration application (step S324). This network setting is performed for wireless device 1. That is, the CPU 405 transmits the wireless setting information to the wireless device 1 via the USB connector 401, and the wireless device 1 configures the WLAN network according to this wireless setting information. WLAN network settings include IP network settings such as IP address, subnet mask, and DNS IP address for LAN communication, as well as settings of information necessary for wireless communication such as network name and encryption key.

[0167]

When the processing of step S324 is completed, the CPU 405 determines whether wireless communication with the image projection device 3 is established via the wireless device 1, in other words, whether a network connection with the image projection device 3 is established (step S325). In this process, if it is determined that a network connection with the image projection device 3 has been established (step S325: YES), the CPU 405 launches an image transfer application (step S326). On the other hand, if it is determined that a network connection with the image projection device 3 has not been established (step S325: NO), the CPU 405 performs an error message display process (step S327). This error message display process is performed by the CPU 405 displaying an error message on the LCD 403.

[0168]

When the processing of step S326 or the processing of step S327 is completed, this auto-run operation processing is terminated.

[0169]

In addition, the CPU 405 of the computer device 4 is configured to control the power supply of the wireless device 1. That is, the wireless device 1 has a memory controller function unit 121 and a wireless communication function unit 123 as described above, and the power supplies of these can be controlled to be turned on and off separately. In this way, the memory controller function unit 121 and the wireless communication function unit 123 can be turned on and off individually, so highly reliable wireless connection operation can be performed within the limited power range of the USB device. For example, in steps S320 to S323, the power supply to the memory controller function unit 121 is turned ON, and the power supply to the wireless communication function unit 123 is turned OFF. Also, in steps S324 to S327, the power supply to the memory controller function unit 121 is turned OFF, and the power supply to the wireless communication function unit 123 is turned ON. In addition, when copying the image transfer application stored in the memory unit of the wireless device 1 to the hard disk 415 of the computer device 4, the power to the memory controller function unit 121 is turned ON and the power to the wireless communication function unit 123 is turned OFF.

[0170]

Next, the timeout process in step S305 will be described with reference to FIG. 19. FIG. 19 is a flowchart of timeout processing in a computer device 4.

[0171]

In this timeout process, the CPU 405 first requests time information (information about the current time) from the image projection device 3, acquires the time information sent from the image projection device 3 in response to this request (step S330), and then proceeds to step S331. As described above, the current time information of the remote control device 2 and the current time information of the image projection device 3 are synchronized.

[0172]

In step S331, the CPU 405 determines whether the effective time has elapsed. The determination of whether the effective time has elapsed is made based on the time information obtained from the image projection device 3 and the wireless setting information read from the wireless device 1. In other words, whether the effective time has elapsed is determined by whether the current time acquired from the image projection device 3 is later than the effective time included in the wireless setting information read from the wireless device 1.

[0173]

In this process, if it is determined that the effective time has elapsed (step S331: YES), the CPU 405 displays a timeout message on the LCD 403 (step S332) and disconnects the wireless connection with the image projection device 3 (step S333). The wireless connection with the image projection device 3 is disconnected when the CPU 405 sends a request to the wireless device 1 to disconnect the wireless connection with the image projection device 3, and the wireless device 1 responds to this request. Once the wireless connection has been disconnected, the CPU 405 terminates execution of the image transfer application (step S334).

[0174]

Even if the effective time has not elapsed, if the CPU 405 determines that the effective time is approaching a predetermined time (e.g., 5 minutes), it displays on the LCD 403 a message indicating that the effective time is approaching, so that the effective time is extended before it elapses. Instead of or in addition to displaying this on the LCD 403, the CPU 405 may transmit information to the image projection device 3 via the wireless device 1 that the effective time is approaching, and superimpose the information that the effective time is approaching on the image projected from the image projection device 3.

[0175]

When it is determined in step S331 that the effective time has not elapsed (step S331: NO), or when the processing of step S334 is completed, the CPU 405 ends the timeout processing.

[0176]

As described above, in the image projection system S of this embodiment, the wireless device 1 has a wireless unit 306 and functions as a wireless unit of a computer device 4 that transmits image data via wireless communication to an image projection device 3 that projects an image according to the image data received by the wireless unit 306. This wireless device 1 is equipped with a USB connector 105 that can be connected to both the image projection device 3 and the computer device 4, a flash memory 104 to which the wireless setting information (wireless communication setting information) can be written from the image projection device 3 when the USB connector 105 is connected to the image projection device 3, and which allows the computer device 4 to read the wireless setting information written from the image projection device 3 when the USB connector 105 is connected to the computer device 4, and a wireless communication unit 107 that communicates with the wireless unit 306 of the image projection device 3 using settings based on the wireless setting information written from the image projection device 3 when the USB connector 105 is connected to the computer device 4. Therefore, communication between the image projection device 3 and the computer device 4 can be performed based on the wireless setting information set by the image projection device 3, making it possible to provide a highly confidential wireless device 1 or image projection system S.

[0177]

(Other embodiments of image projection system S)

In the above embodiment, an example was described in which the writing of wireless setting information from the remote control device 2 to the wireless device 1 is performed via the USB connectors 105, 201. Here, however, as another embodiment of the image projection system S, an embodiment will be described in which the writing of wireless setting information from the remote control device 2' to the wireless device 1' is performed by wireless communication in which wireless signals are transmitted and received. Here, we will explain infrared communication, which sends and receives infrared signals, as an example of wireless communication. Furthermore, in the above embodiment, we have described the operation when the remote control device 2 is set to update the wireless setting information when the wireless device 1 is connected to the remote control device 2 or when the start-up control button 231 of the remote control device 2 is operated. However, here we will describe the operation where the wireless setting information is set to update when the update button 232 is operated.

[0178]

Here, the wireless device 1' is a wireless device equipped with an infrared receiving unit 113 (corresponding to an example of a wireless receiving unit), as shown in FIG. 20. The infrared receiving unit 113 has an infrared light receiving unit 114 that receives an infrared signal transmitted from the remote control device 2, and an infrared control unit 115 that notifies the CPU 101 of the infrared signal received by the infrared light receiving unit 114. As described above, the wireless device 1' is provided with an infrared receiving unit 113, and operates to receive information of the infrared signal

transmitted from the remote control device 2 via the infrared receiving unit 113 and notify the computer device 4. The infrared light receiving unit 114 may be an infrared LED or the like. It should be noted that the description is omitted because there is no difference from the configuration of the wireless device 1 except that the control program stored in the ROM 103 is partially different. In addition, the configuration of the remote control device 2' is the same as that of the remote control device 2, except for some differences in the control program stored in the secondary storage device 211, so a description of its configuration will be omitted.

[0179]

First, the operation of the remote control device 2' will be specifically described with reference to the drawings. FIG. 21 is a flowchart illustrating an example operation of a remote control device 2'.

[0180]

As shown in FIG. 21, first, the CPU 210 of the remote control device 2' determines whether an ID issuance command has been detected (step S140). Here, whether or not an ID issuance command has been detected is determined by whether or not the CPU 210 detects the update button 232 (see Figure 4).

[0181]

When an ID issuance command is detected in step S140, the CPU 210 updates the wireless setting information (step S141). This process is similar to the process shown in the flowchart of FIG. 11.

[0182]

Next, the CPU 210 controls the display unit 207 to display a message prompting the user to set the number of IDs permitted to be issued. The user follows the display on the display unit 207 and operates the left and right arrow keys 234, 235 and the enter key 236 to set the number of IDs permitted to be issued. This setting of the number of permitted ID issuances is stored by the CPU 210 in a specified area of the secondary storage device 211 (step S142). In this way, the CPU 210 functions as a write count setting means that sets the number of times the same wireless setting information can be written to the device.

[0183]

Next, the CPU 210 determines whether or not the wireless information setting button 239 located on the operation unit 108 has been detected (step S143). The wireless information setting button 239 is detected by the CPU 210 by determining whether or not the user has operated the wireless information setting button 239.

[0184]

In this process, if it is determined that the wireless information setting button 239 has been detected (step S143: YES), the CPU 210 updates the number of instances of the same wireless setting information that have already been issued (step S144). That is, the CPU 210 increments the number of instances of the same wireless setting information that have already been issued by one. This issued number is initialized and set to "0" during processing in step S142.

[0185]

Next, the CPU 210 determines whether the number of issued pieces of wireless setting information exceeds the number of permitted issuances set in step S142 (step S145). In this process, if it is determined that the number of issued pieces of wireless setting information does not exceed the permitted number of pieces (step S145: NO), the CPU 210 retrieves the wireless setting information stored in the secondary storage device 211 and transmits this wireless setting information to the wireless device 1' as an infrared signal from the infrared transmitting unit 203 (step S146). In this way, the CPU 210 will not update the wireless setting information until the number of times it is written exceeds the number of permitted issues (number of times it is written) set in the secondary storage device 211. On the other hand, if it is determined that the number of issued IDs exceeds the permitted number of IDs to be issued (step S145: YES), the CPU 210 discards (clears) the wireless setting information stored in the secondary storage device 211 (step S147) and sends a notification to the wireless device 1' that the permitted number of settings has been exceeded, which is information indicating that the transmission of wireless setting information has reached the permitted number of IDs to be issued (step S148). It should be noted that the transmission in steps S146 to S148 is performed by the CPU 210 transmitting this information from the infrared transmission unit 203 as an infrared signal.

[0186]

In this way, the remote control device 2' transmits wireless setting information each time the wireless information setting button 239 is operated until the set number of permitted issues is exceeded, so that the wireless setting information can be written to each of the multiple computer devices 4 connected to the wireless device 1'.

[0187]

Next, the operation of the computer device 4' to which the wireless device 1' is connected will be described in detail with reference to the drawings. FIG. 22 is a flowchart illustrating an example operation of a computer device 4'. Since the processing of steps S340 to S349 in FIG. 22 is equivalent to the processing of steps S300 to S309 in FIG. 17, only steps S350 to S354 will be described. In addition, in step S342, whether or not the image transfer application is running normally is determined by whether or not wireless setting information has been set and the image transfer application is in a state in which the image data can be transferred to the image projection device 3.

[0188]

In step S342, if the CPU 405 determines that the image transfer application has not started normally (step S342: NO), it determines whether or not an infrared signal from the remote control device 2 has been received by the infrared receiving unit 113 of the wireless device 1 (step S350).

[0189]

In this process, if it is determined that an infrared signal has been received (step S350: YES), the CPU 405 determines whether the infrared signal is the wireless setting information (step S351). At this time, if it is determined that the infrared signal is wireless setting information (step S351: YES), the CPU 405 updates the wireless setting information of the wireless device 1 (step S354). That is, the wireless device 1 is operated based on the wireless setting information received in step S351. On the other hand, if it is determined that the infrared signal is not wireless setting information (step S351: NO), the CPU 405 determines whether the infrared signal received in step S350 is a notification that the setting permission number has been exceeded (step S352).

[0190]

In step S352, if it is determined that the notification is for exceeding the permitted number of settings (step S352: YES), the CPU 405 displays an error message indicating that wireless communication settings cannot be made (step S353).

[0191]

When the processing of steps S353 and S354 is completed, or when it is determined in step S350 that an infrared signal has not been received (step S350: NO), or when it is determined in step S351 that the infrared signal is the wireless setting information (step S351: YES), or when it is determined in step S352 that the signal is not a notification that the permitted number of settings has been exceeded (step S352: NO), the CPU 405 transitions the processing to step S342.

[0192]

Above, some of the embodiments of the present invention have been described in detail with reference to the drawings, but these are merely examples, and the present invention can be implemented in other forms with various modifications and improvements based on the knowledge of those skilled in the art.

[0193]

For example, communication between the wireless device 1, the image projection device 3, and the computer device 4 has been described as being based on the USB standard, but this is not limited to this and communication may be performed using other communication standards.

[0194]

Furthermore, although the wireless device 1 is provided with a wireless communication unit 107, it is also possible to use the wireless unit of the computer device 4, and in this case, it is possible to use a device in which the function of the wireless communication unit 107 has been removed from the wireless device 1.

[Brief Description of Drawings]

[0195]

[FIG. 1] A overall configuration diagram of an image projection system according to an embodiment of the present invention.

[FIG. 2] A diagram for explaining a schematic operation of the image projection system in this embodiment.

[FIG. 3] An external view of a wireless device in this embodiment.

[FIG. 4] An external view of a remote control device according to the embodiment.

[FIG. 5] A block diagram of a wireless device according to the present embodiment.

[FIG. 6] A functional block diagram of a wireless device according to the embodiment.

[FIG. 7] A block diagram of a memory controller function unit of FIG. 6.

[FIG. 8] A diagram illustrating an example of wireless setting information according to the embodiment.

[FIG. 9] A block diagram of a remote control device according to an embodiment of the present invention.

[FIG. 10] A flowchart of the processing of wireless setting information of the remote control device according to the embodiment.

[FIG. 11] A flowchart of the process for updating the wireless setting information of the remote control device according to the present embodiment.

[FIG. 12] A flowchart of a process for the writing wireless setting information of a remote control device according to the embodiment.

[FIG. 13] A flowchart showing processing of other wireless setting information of the remote control device in the present embodiment.

[FIG. 14] A block diagram of an image projection device in this embodiment.

[FIG. 15] A flowchart for describing the operation of an image projection device in this embodiment.

[FIG. 16] A block diagram of a computer device according to this embodiment.

[FIG. 17] A flowchart for describing the operation of a computer device in this embodiment.

[FIG. 18] A flowchart illustrating the operation of a computer device according to the present embodiment.

[FIG. 19] A flowchart illustrating the operation of a computer device according to the present embodiment.

[FIG. 20] A block diagram of a remote control device according to another embodiment.

[FIG. 21] A flowchart of the processing of wireless setting information of a remote control device in the embodiment.

[FIG. 22] A flowchart illustrating the operation of a computer device according to another embodiment.

[Reference Signs List]

[0196]

1	Wireless device
2	Remote control device
3	Image projection device
4	Computer device
101	CPU (control unit) of the wireless device
104	Flash memory (storage unit) of the wireless device
105	USB connector of the wireless device
201	USB connector of the remote control device
203	Infrared transmitter of the remote control device
210	CPU (control unit) of the remote control device
231	Start-up control button of the remote control device

301	Infrared receiving unit of the image projection device
303	Control unit of the image projection device
306	Wireless unit of the image projection device
401	USB connector of the computer device
405	CPU (control unit) of the computer device

[FIG. 1]

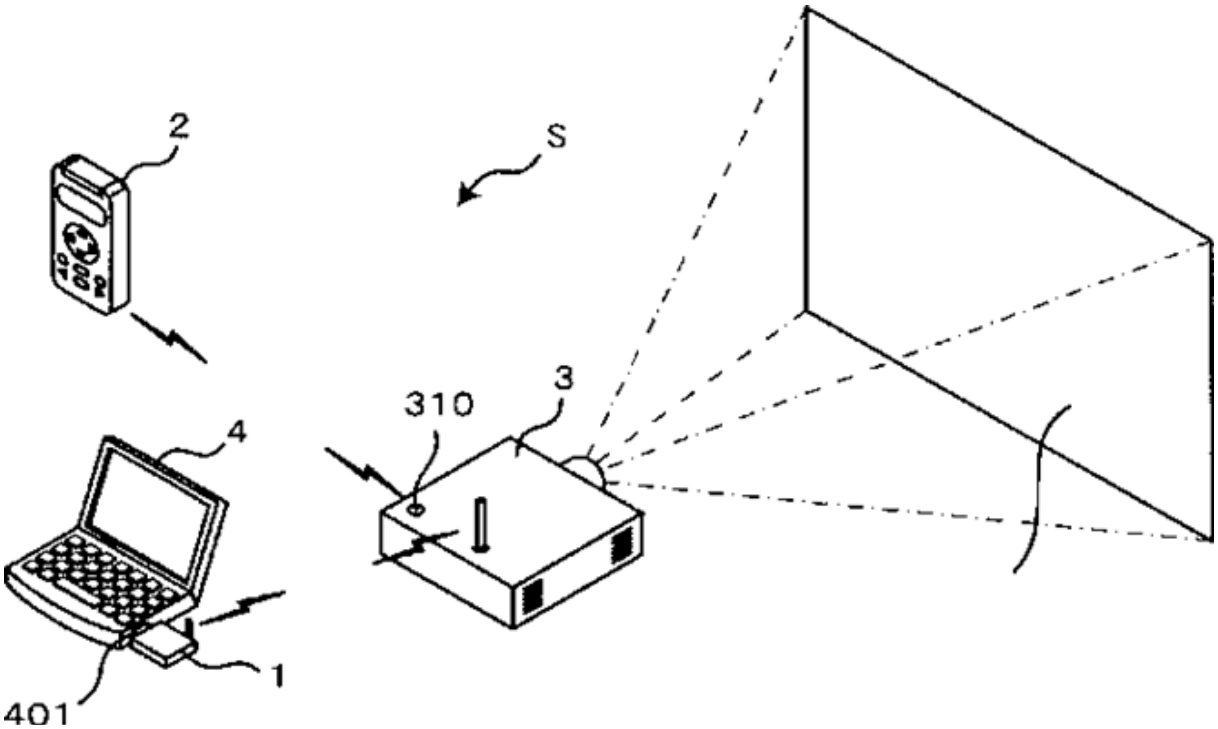

[FIG. 2]

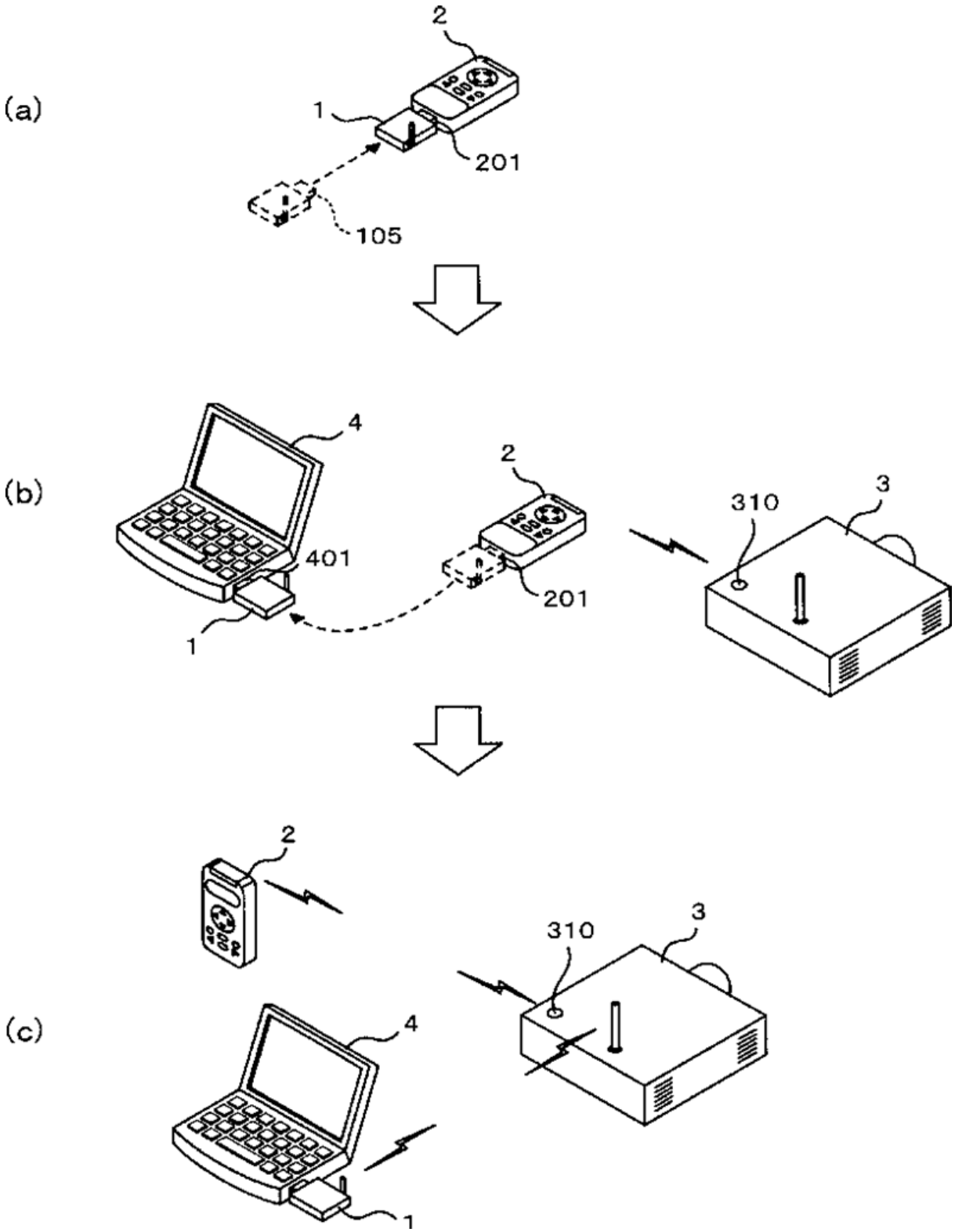

[FIG. 3]

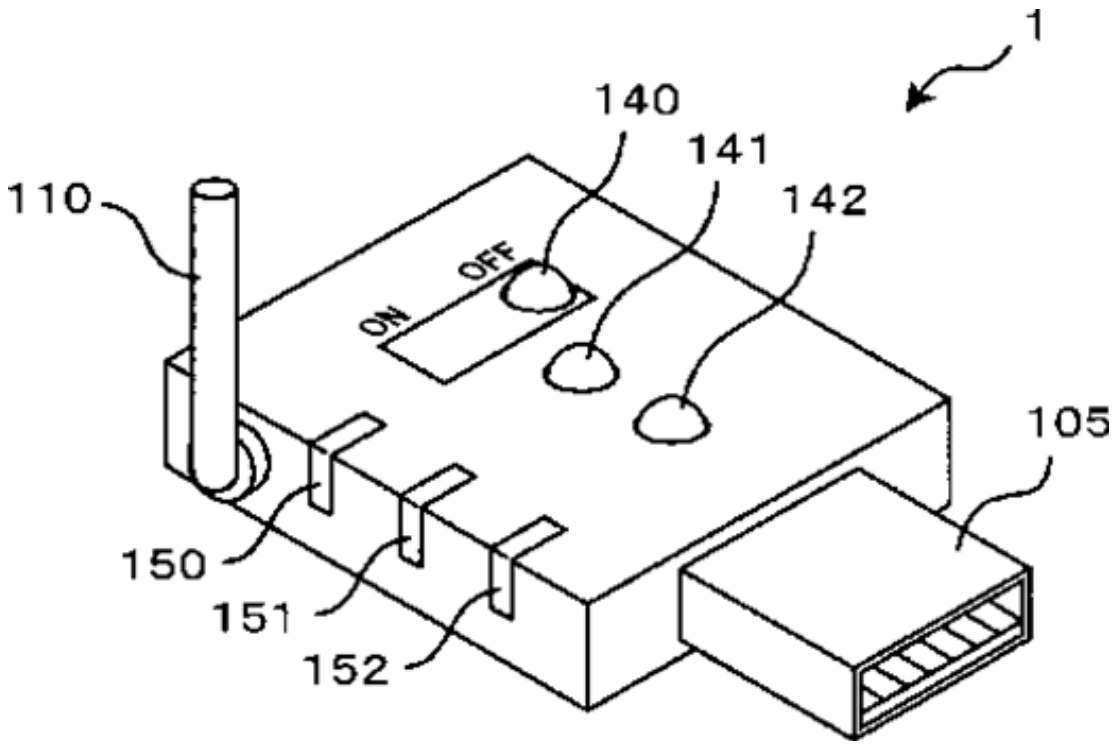

[FIG. 4]

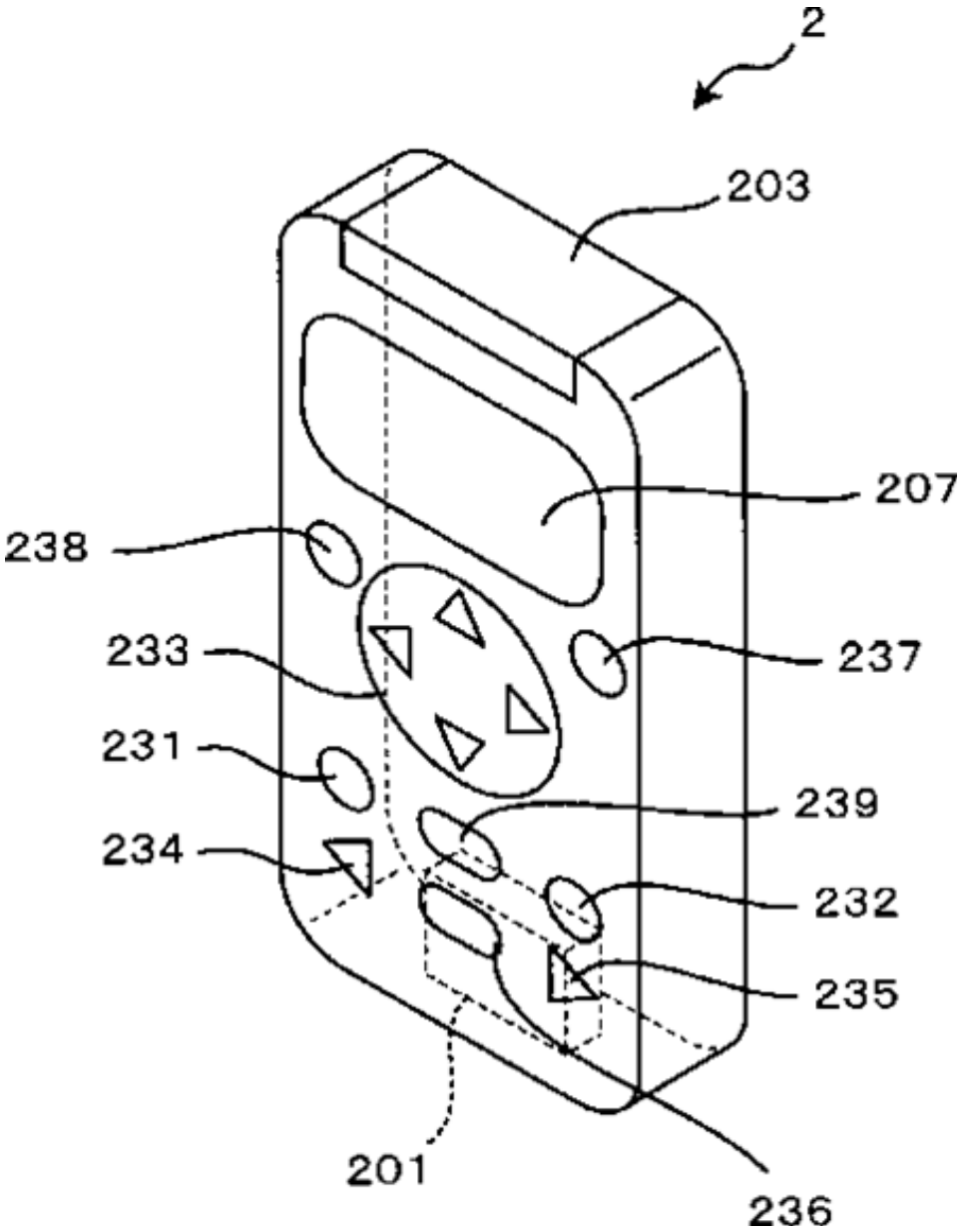

[FIG. 5]

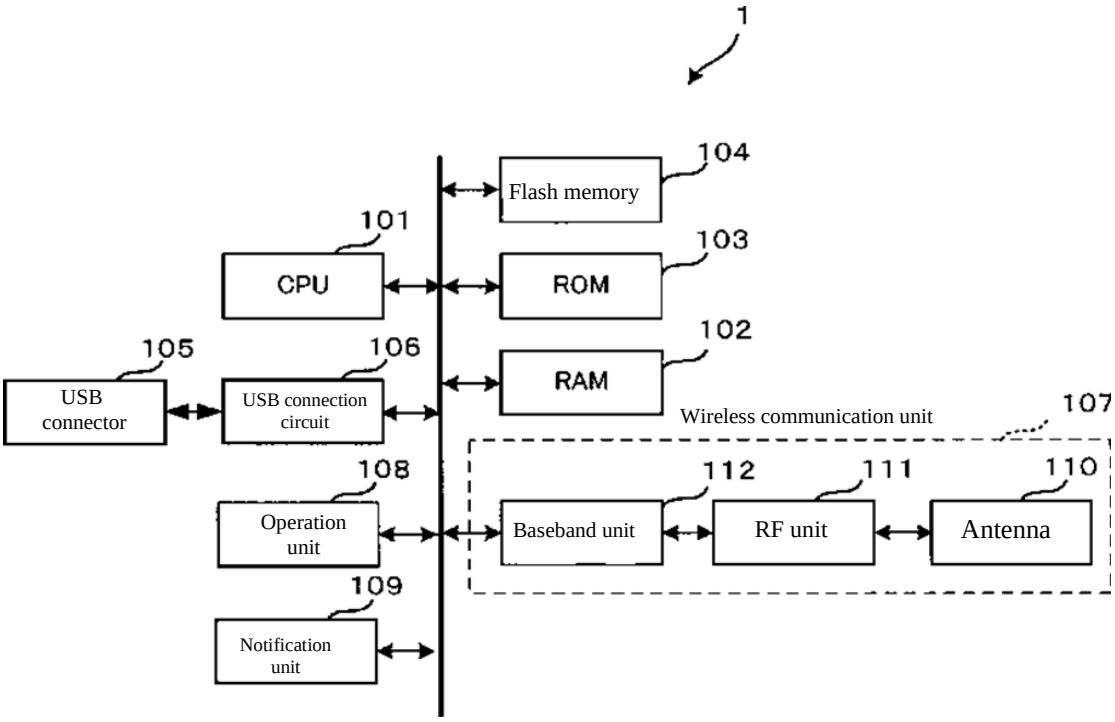
1
104
Flash memory
101
CPU
103
ROM
102
RAM
105
USB connector
106
USB connection circuit
Wireless communication unit
107
108
Operation unit
112
Baseband unit
111
RF unit
110
Antenna
109
Notification unit

[FIG. 6]

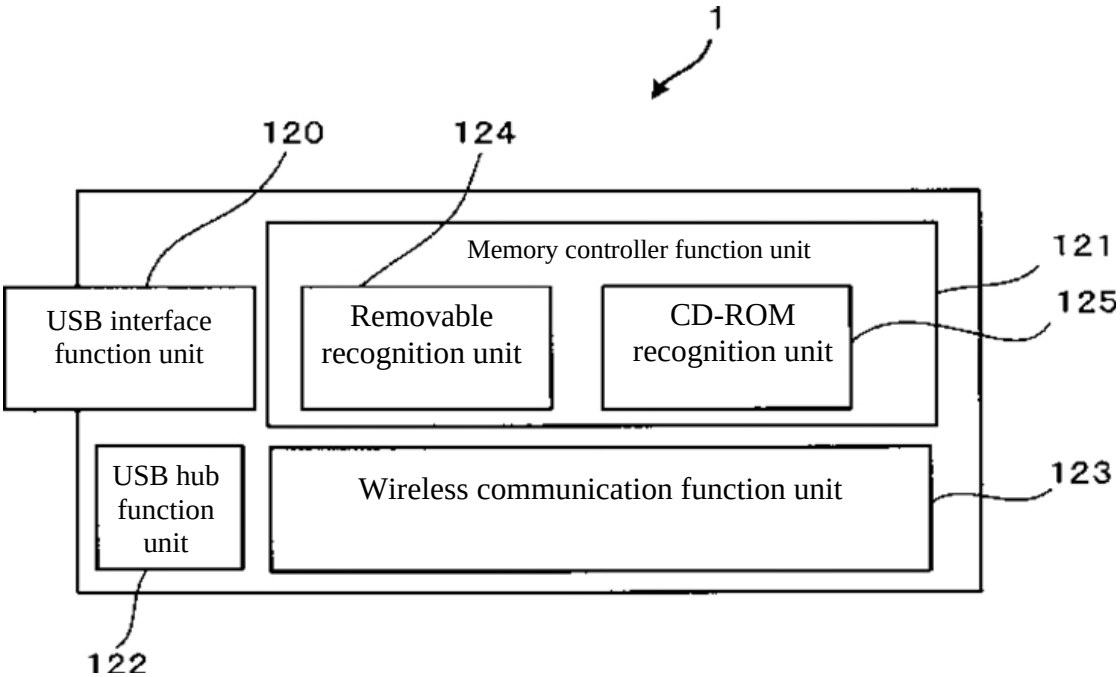
1
120
124
Memory controller function unit
121
125
USB interface function unit
Removable recognition unit
CD-ROM recognition unit
USB hub function unit
Wireless communication function unit
123
122

[FIG. 7]

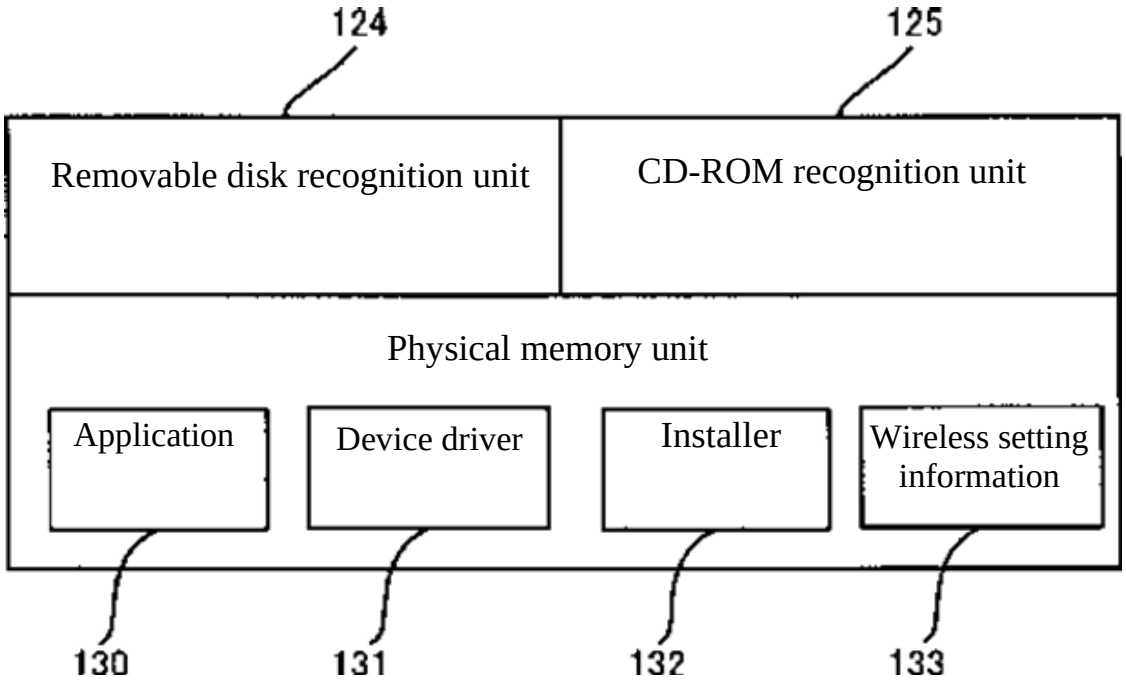
124
125
Removable disk recognition unit
CD-ROM recognition unit
Physical memory unit
Application
Device driver
Installer
Wireless setting information
130
131
132
133

[FIG. 8]

Wireless setting information

Band	IEEE802.11g
Network mode	Ad-hoc mode
Network name	Projector-net
Wireless channels	11
Authentication level	Open system
Encryption level	128 bits
Data encryption	WEP
Encryption key	ga54121···
IP address	192.168.0.1
Subnet mask	255.255.255.0
DNS	192.168.0.1
Effective time	2000.01.01 18:20
(Connection time	120 min)

[FIG. 9]

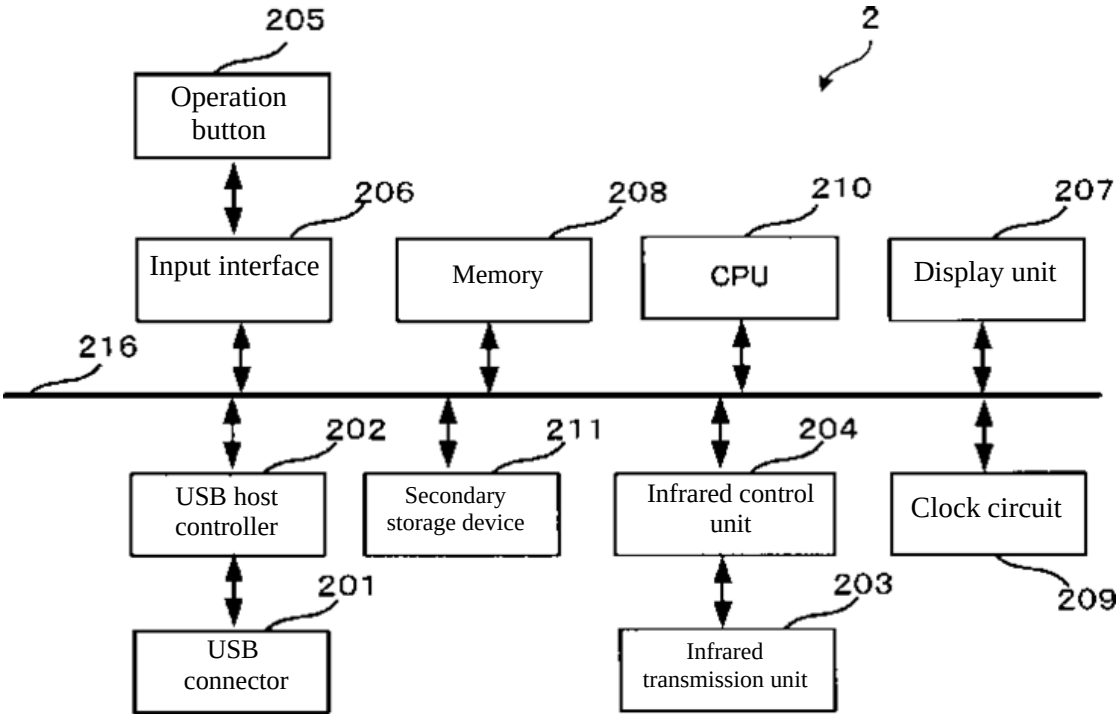
205
2
Operation button
206
208
210
207
Input interface
Memory
CPU
Display unit
216
202
211
204
USB host controller
Secondary storage device
Infrared control unit
Clock circuit
201
203
209
USB connector
Infrared transmission unit

[FIG. 10]

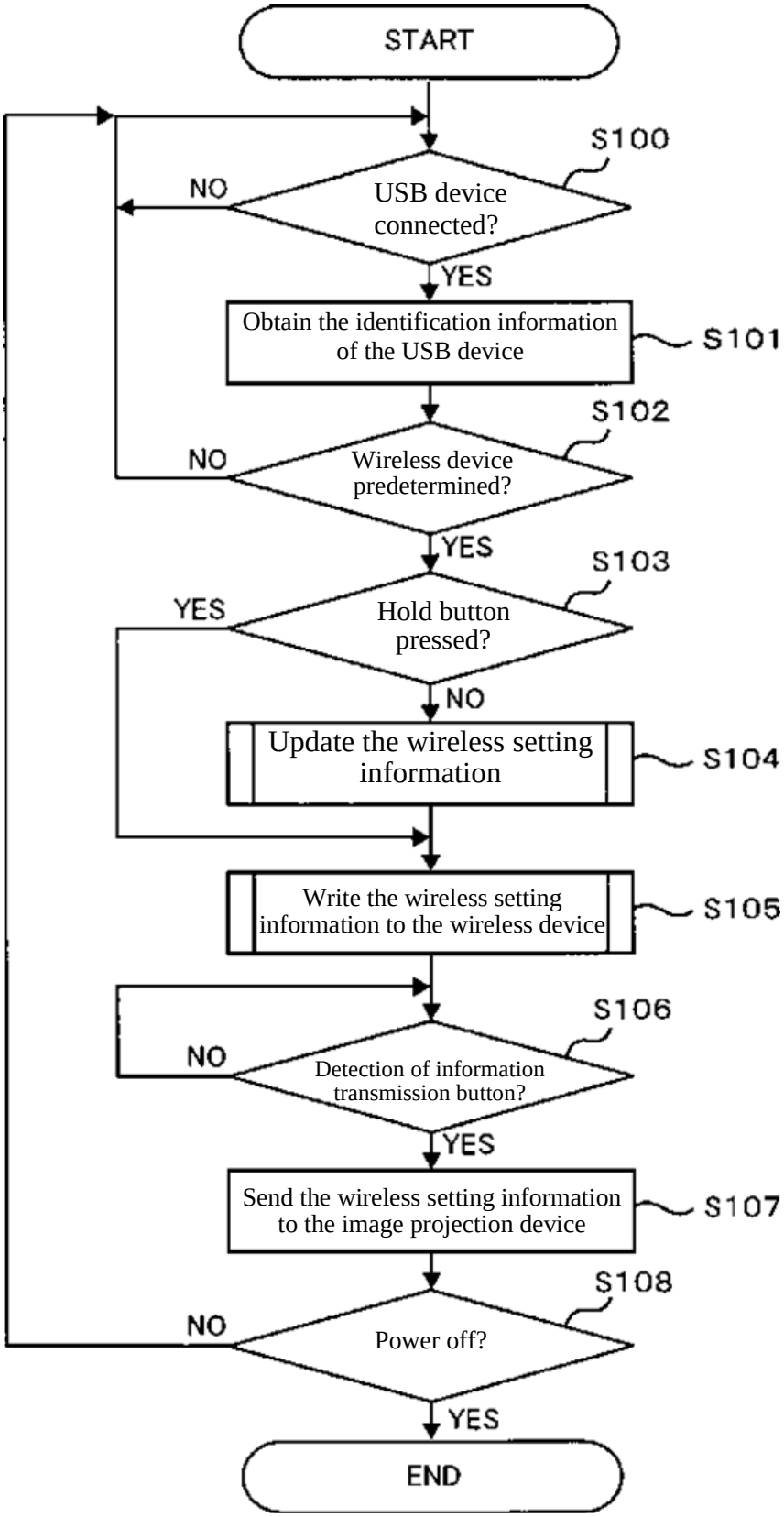
START
S100
USB device connected?
NO
YES
Obtain the identification information of the USB device
S101
S102
Wireless device predetermined?
NO
YES
S103
Hold button pressed?
YES
NO
Update the wireless setting information
S104
Write the wireless setting information to the wireless device
S105
S106
Detection of information transmission button?
NO
YES
Send the wireless setting information to the image projection device
S107
S108
Power off?
NO
YES
END

[FIG. 11]

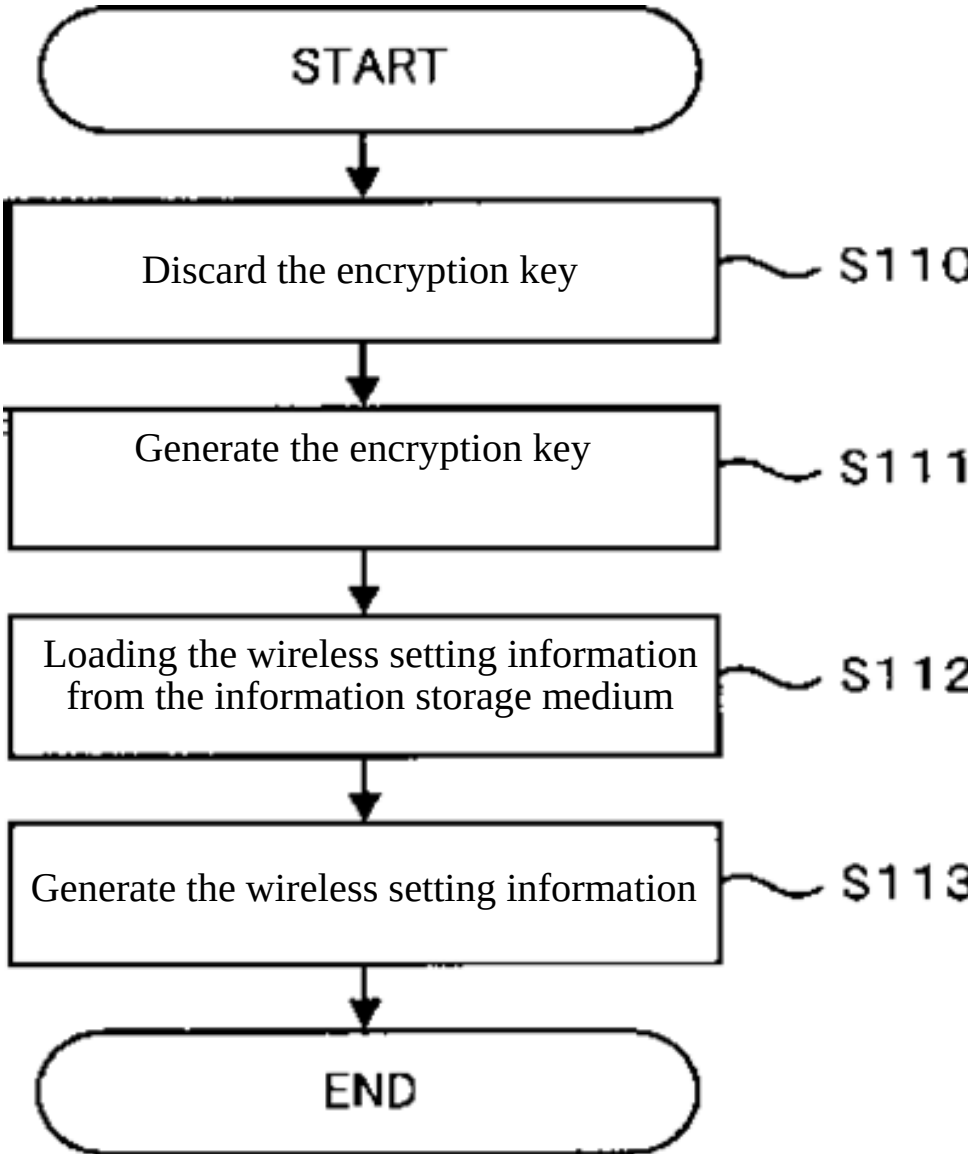
START
Discard the encryption key
S110
Generate the encryption key
S111
Loading the wireless setting information from the information storage medium
S112
Generate the wireless setting information
S113
END

[FIG. 12]

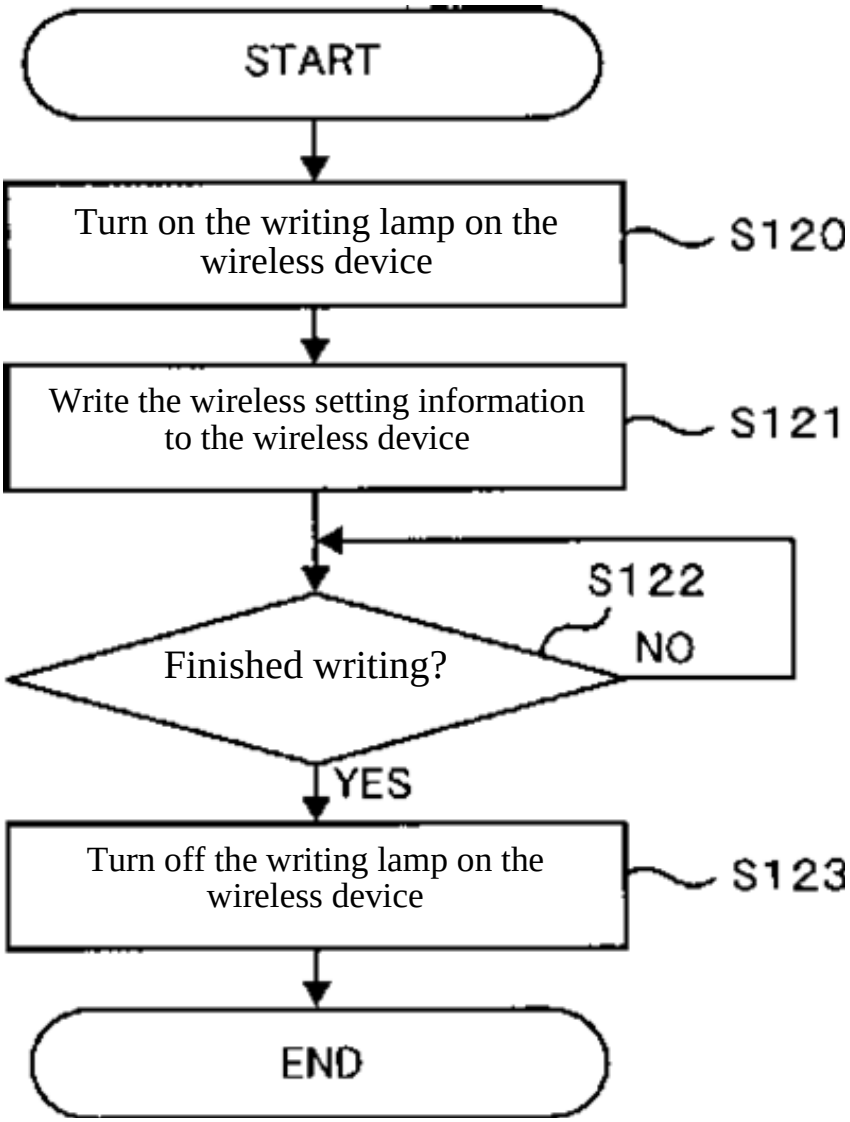
START
Turn on the writing lamp on the wireless device
S120
Write the wireless setting information to the wireless device
S121
S122
Finished writing?
NO
YES
Turn off the writing lamp on the wireless device
S123
END

[FIG. 13]

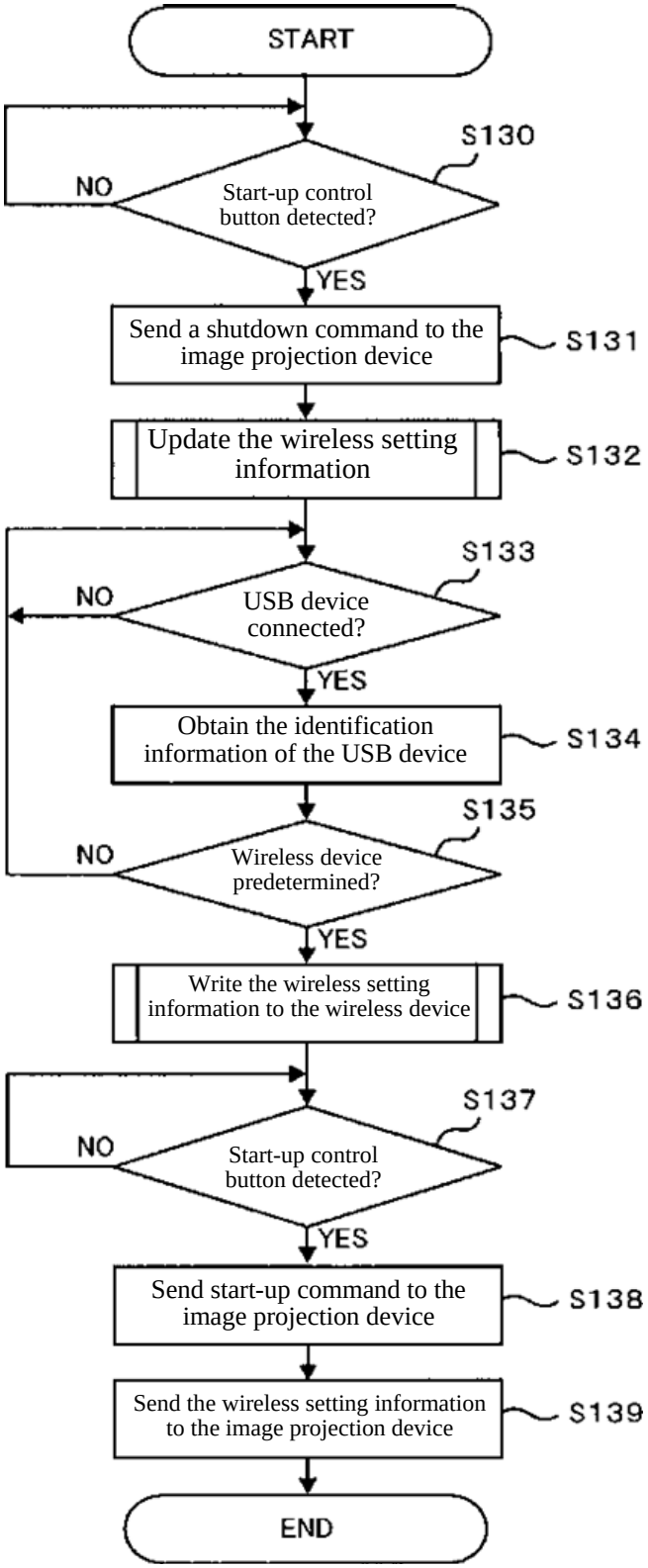
START
S130
Start-up control button detected?
NO
YES
Send a shutdown command to the image projection device
S131
Update the wireless setting information
S132
S133
USB device connected?
NO
YES
Obtain the identification information of the USB device
S134
S135
Wireless device predetermined?
NO
YES
Write the wireless setting information to the wireless device
S136
S137
Start-up control button detected?
NO
YES
Send start-up command to the image projection device
S138
Send the wireless setting information to the image projection device
S139
END

[FIG. 14]

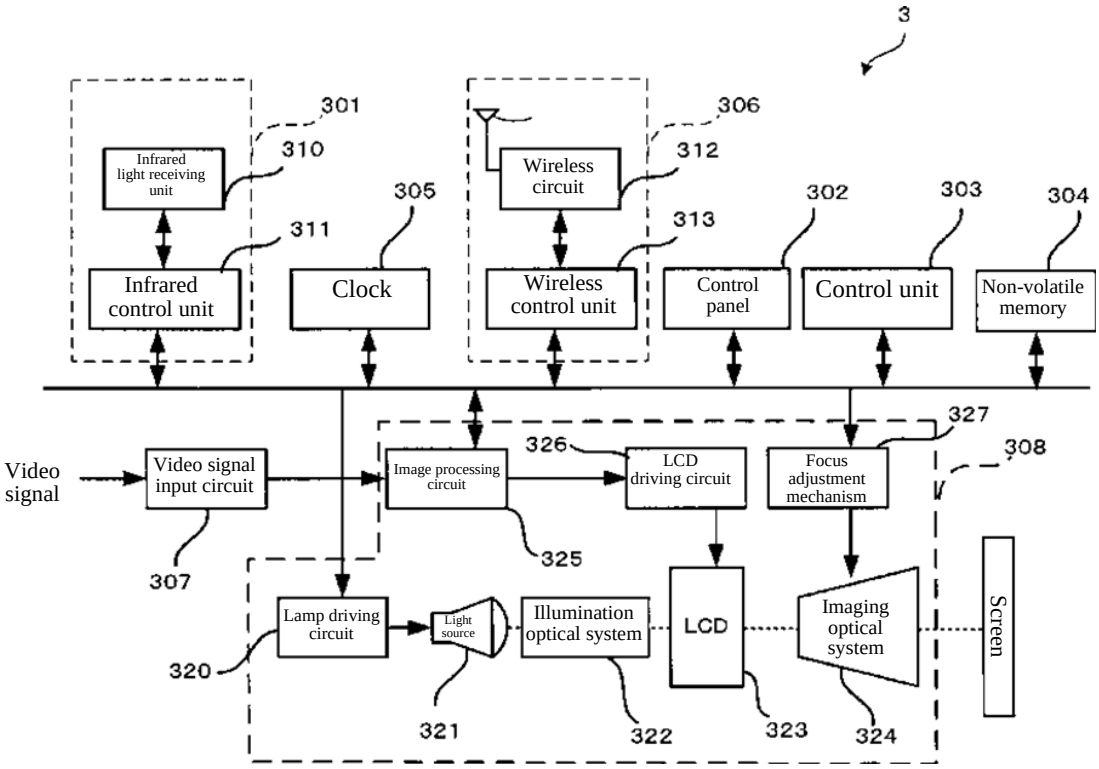
3
301
306
Infrared light receiving unit
310
Wireless circuit
312
305
302
303
304
311
313
Infrared control unit
Clock
Wireless control unit
Control panel
Control unit
Non-volatile memory
327
326
308
Video signal
Video signal input circuit
Image processing circuit
LCD driving circuit
Focus adjustment mechanism
325
307
Lamp driving circuit
Light source
Illumination optical system
LCD
Imaging optical system
Screen
320
321
322
323
324

[FIG. 15]

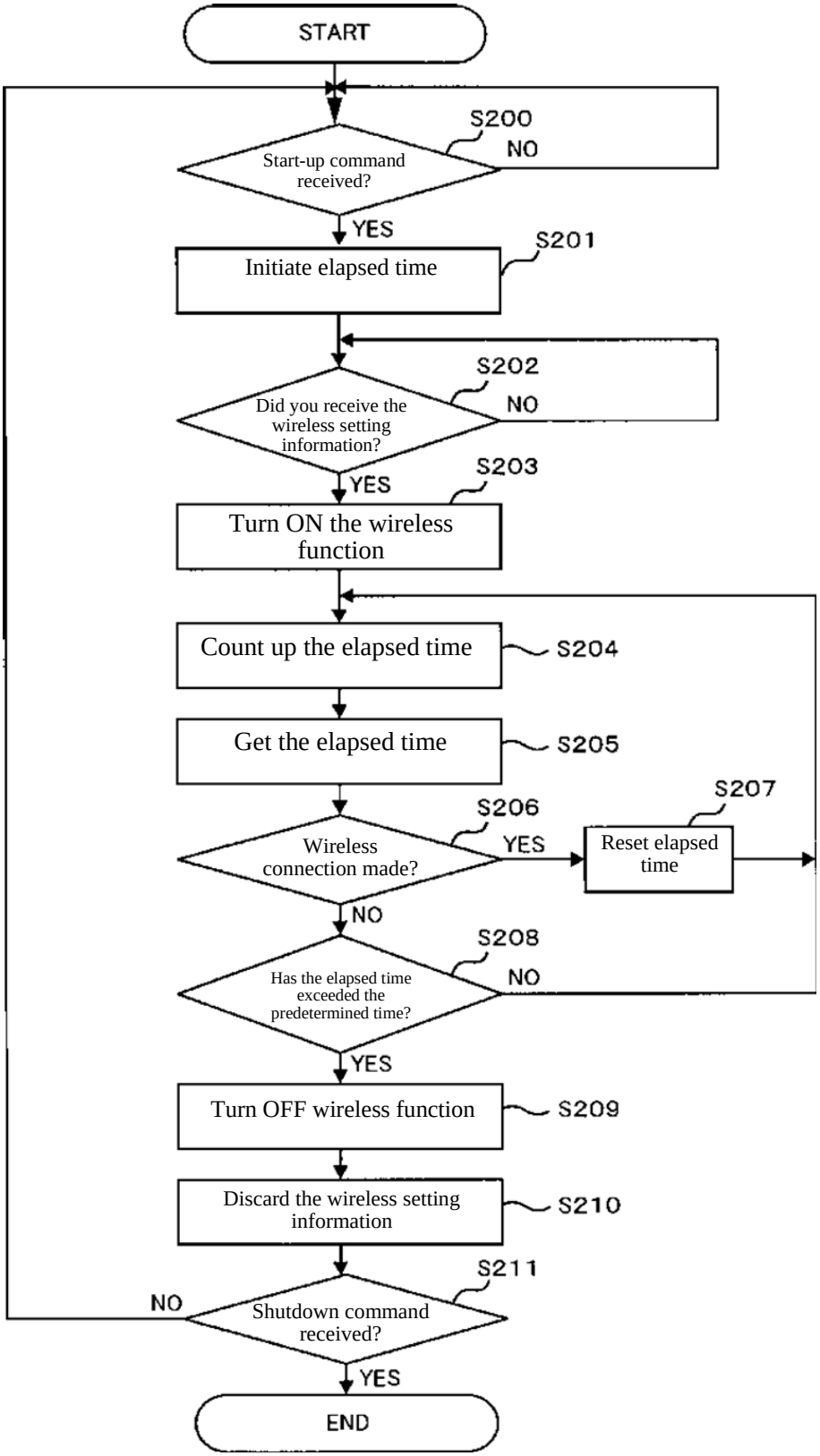
START
S200
Start-up command received?
NO
YES
S201
Initiate elapsed time
S202
Did you receive the wireless setting information?
NO
YES
S203
Turn ON the wireless function
Count up the elapsed time
S204
Get the elapsed time
S205
S206
Wireless connection made?
YES
S207
Reset elapsed time
NO
S208
Has the elapsed time exceeded the predetermined time?
NO
YES
Turn OFF wireless function
S209
Discard the wireless setting information
S210
S211
Shutdown command received?
NO
YES
END

[FIG. 16]

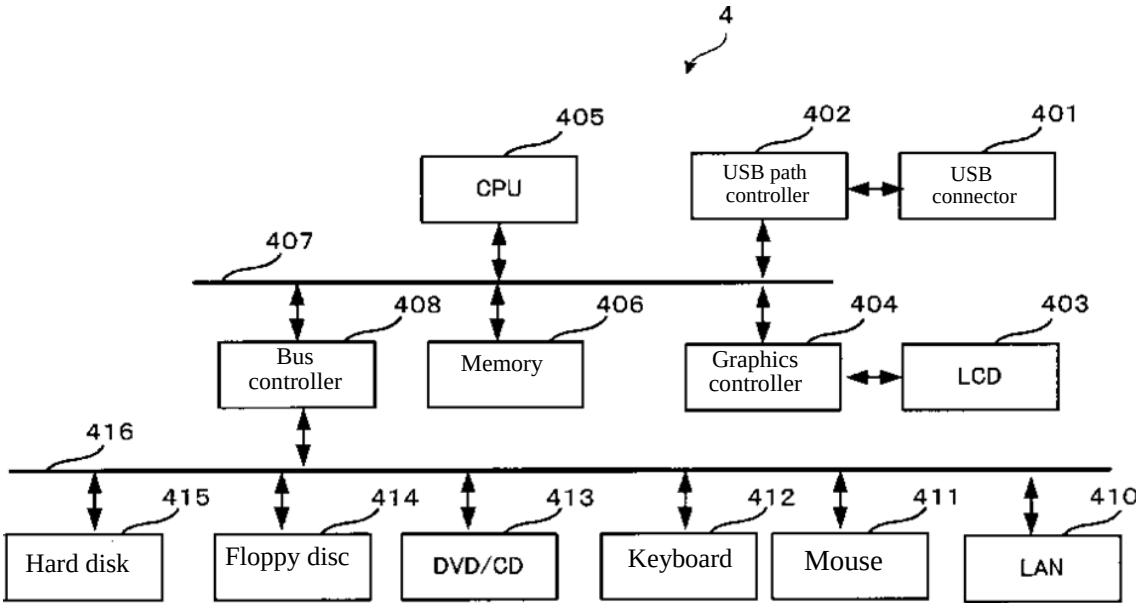
4
405
CPU
402
USB path controller
401
USB connector
407
408
Bus controller
406
Memory
404
Graphics controller
403
LCD
416
415
Hard disk
414
Floppy disc
413
DVD/CD
412
Keyboard
411
Mouse
410
LAN

[FIG. 17]

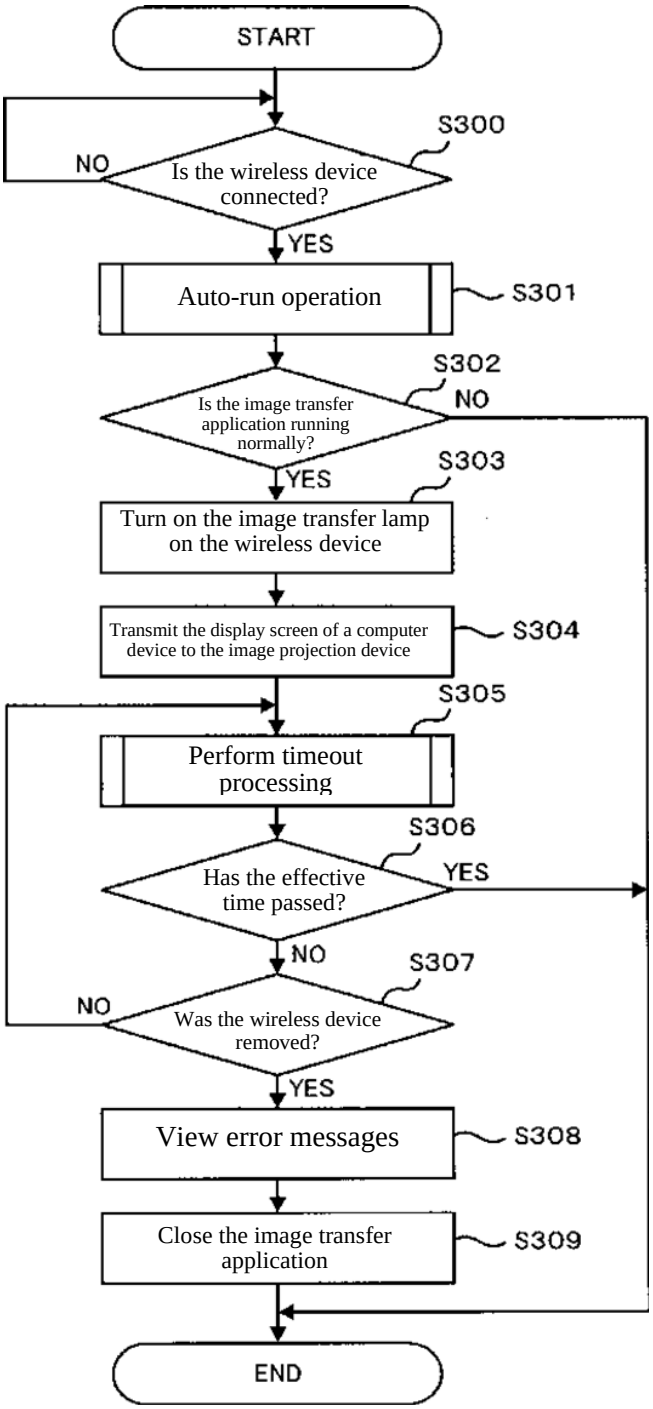
START
S300
Is the wireless device connected?
NO
YES
Auto-run operation
S301
S302
Is the image transfer application running normally?
NO
YES
S303
Turn on the image transfer lamp on the wireless device
Transmit the display screen of a computer device to the image projection device
S304
S305
Perform timeout processing
S306
Has the effective time passed?
YES
NO
S307
Was the wireless device removed?
NO
YES
View error messages
S308
Close the image transfer application
S309
END

[FIG. 18]

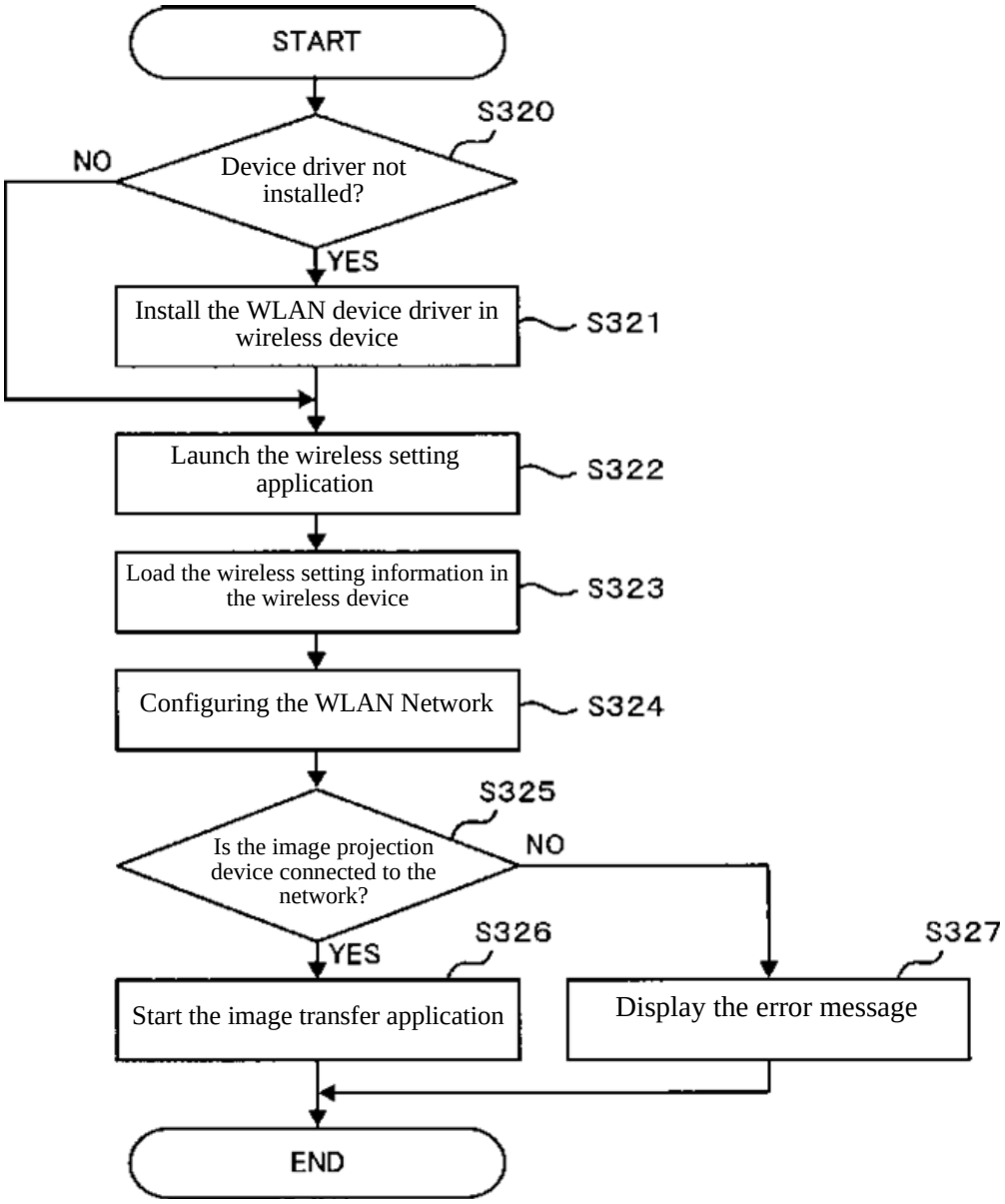
START
S320
Device driver not installed?
NO
YES
Install the WLAN device driver in wireless device
S321
Launch the wireless setting application
S322
Load the wireless setting information in the wireless device
S323
Configuring the WLAN Network
S324
S325
Is the image projection device connected to the network?
NO
YES
S326
S327
Start the image transfer application
Display the error message
END

[FIG. 19]

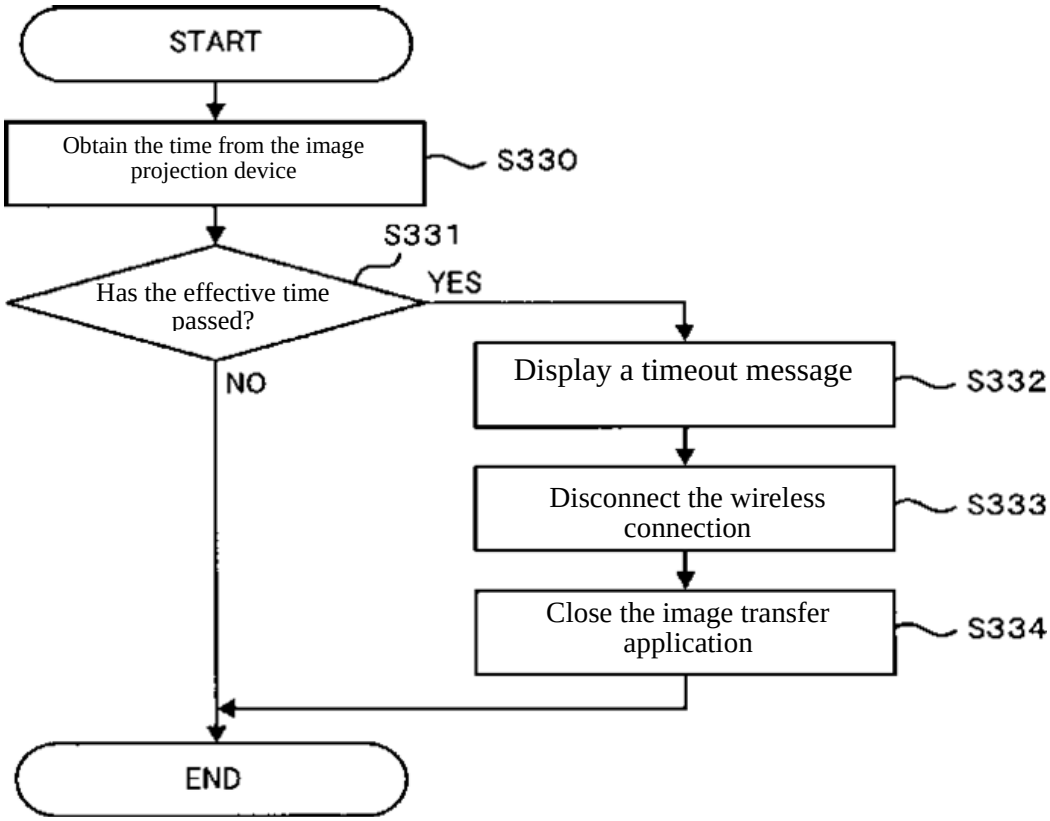
START
Obtain the time from the image projection device
S330
S331
Has the effective time passed?
YES
NO
Display a timeout message
S332
Disconnect the wireless connection
S333
Close the image transfer application
S334
END

[FIG. 20]

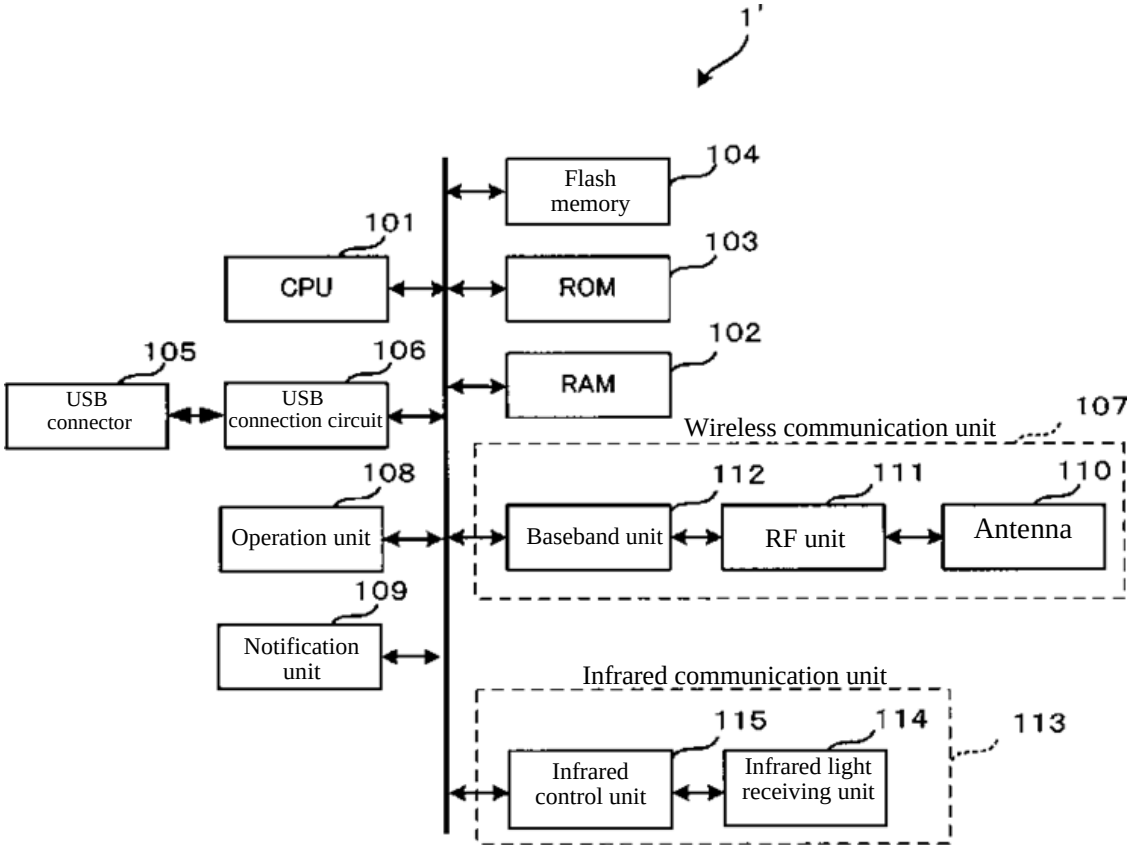
1'
Flash memory
104
101
CPU
ROM
103
105
106
USB connector
USB connection circuit
RAM
102
Wireless communication unit
107
108
112
111
110
Operation unit
Baseband unit
RF unit
Antenna
109
Notification unit
Infrared communication unit
115
114
113
Infrared control unit
Infrared light receiving unit

[FIG. 21]

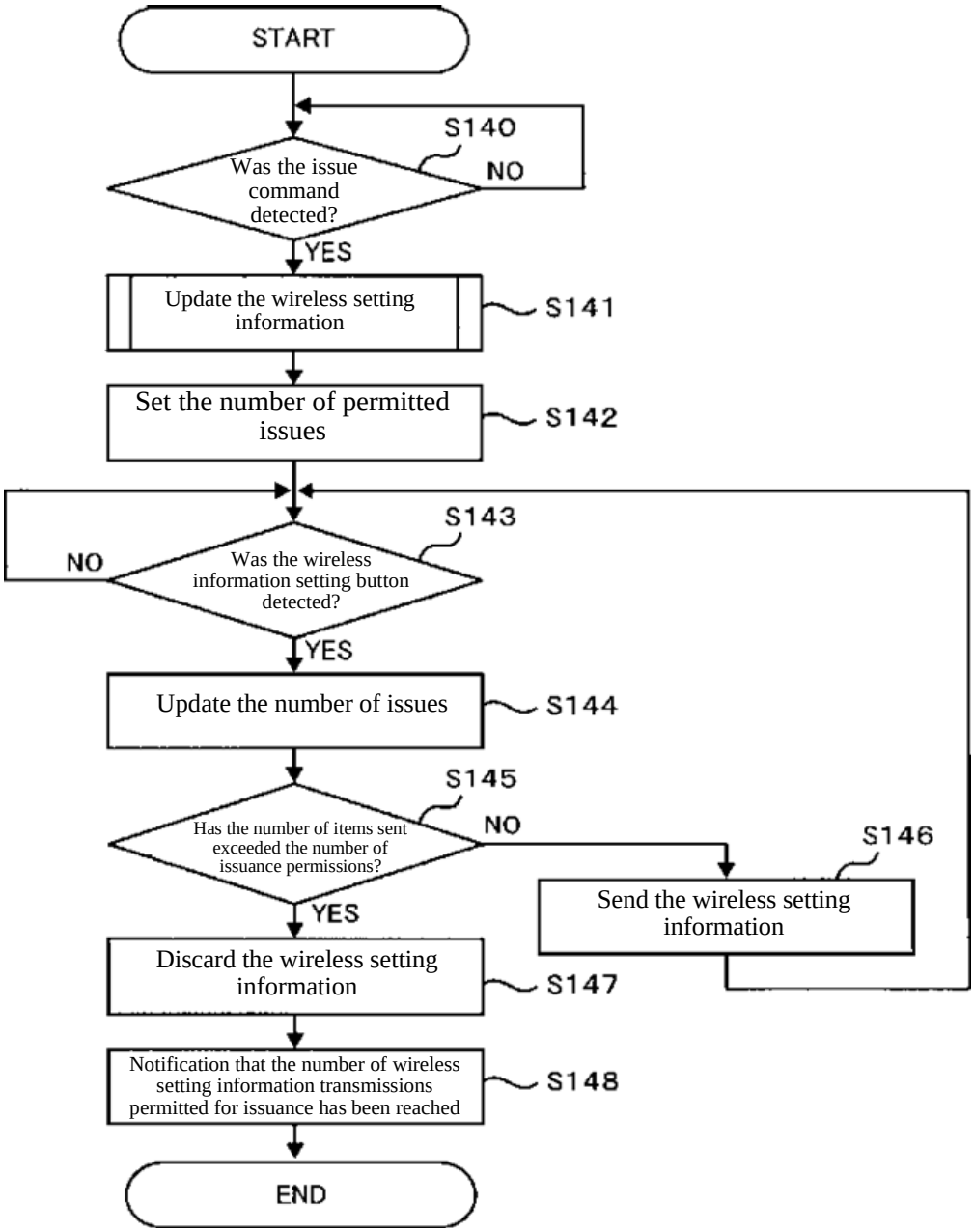
START
S140
Was the issue command detected?
NO
YES
Update the wireless setting information
S141
Set the number of permitted issues
S142
S143
NO
Was the wireless information setting button detected?
YES
Update the number of issues
S144
S145
Has the number of items sent exceeded the number of issuance permissions?
NO
S146
Send the wireless setting information
YES
Discard the wireless setting information
S147
Notification that the number of wireless setting information transmissions permitted for issuance has been reached
S148
END

[FIG. 22]

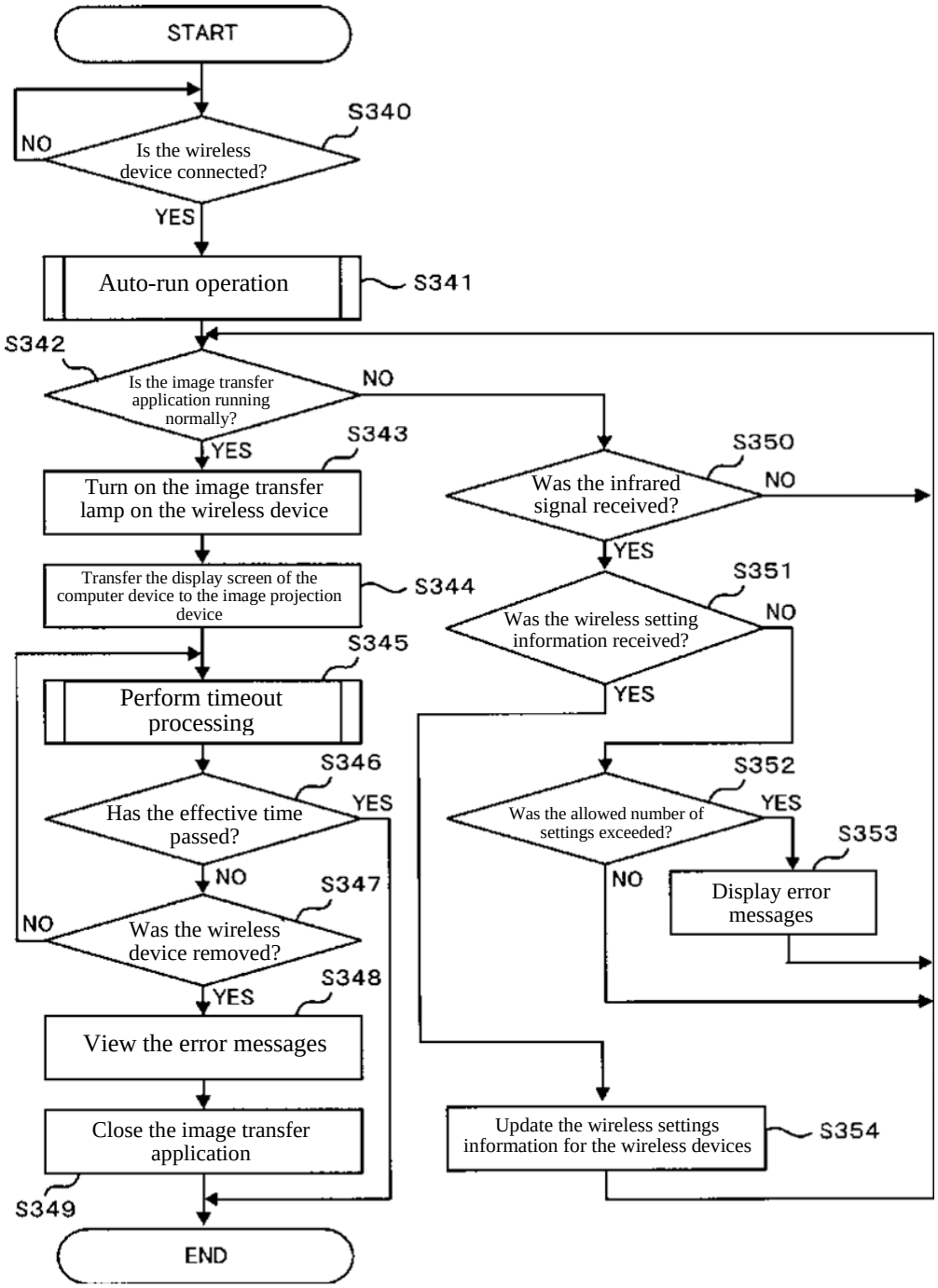
START
S340
Is the wireless device connected?
NO
YES
Auto-run operation
S341
S342
Is the image transfer application running normally?
NO
YES
S343
Turn on the image transfer lamp on the wireless device
Transfer the display screen of the computer device to the image projection device
S344
S345
Perform timeout processing
S346
Has the effective time passed?
YES
NO
S347
Was the wireless device removed?
NO
YES
S348
View the error messages
Close the image transfer application
S349
END
S350
Was the infrared signal received?
NO
YES
S351
Was the wireless setting information received?
NO
YES
S352
Was the allowed number of settings exceeded?
YES
NO
S353
Display error messages
Update the wireless settings information for the wireless devices
S354