US 20100295994A1

(19) United States

(12) Patent Application Publication

KAPLAN et al.

(10) Pub. No.: US 2010/0295994 A1

(43) Pub. Date: Nov. 25, 2010

(54) **MANAGEMENT AND DISPLAY OF VIDEO CONTENT**

(76) Inventors: **Jonathan KAPLAN**, San Francisco, CA (US); **Ariel BRAUNSTEIN**, San Francisco, CA (US); **John Louis Warpakowski FURLAN**, Belmont, CA (US)

Correspondence Address:
PATTERSON & SHERIDAN, LLP/CISC
3040 POST OAK BLVD., SUITE 1500
HOUSTON, TX 77056-6582 (US)

(21) Appl. No.: **12/538,073**

(22) Filed: **Aug. 7, 2009**

Related U.S. Application Data

(60) Provisional application No. 61/179,688, filed on May 19, 2009.

Publication Classification

(51) **Int. Cl.**
H04N 3/27 (2006.01)

(52) **U.S. Cl.** **348/554**; 348/E03.049

(57) **ABSTRACT**

A method of transmitting video content between a computing device and display device. The method includes establishing a data connection between a receiver unit and the display device, where the receiver unit includes a first wireless transceiver and an output port, establishing a data connection between a transmitter unit and the computing device, where the transmitter unit includes a second wireless transceiver and a memory and is configured to perform two-way wireless communications with only the receiver unit and is configured to not perform two-way wireless communications with any other devices, and transmitting the video content from the transmitter unit to the receiver unit.

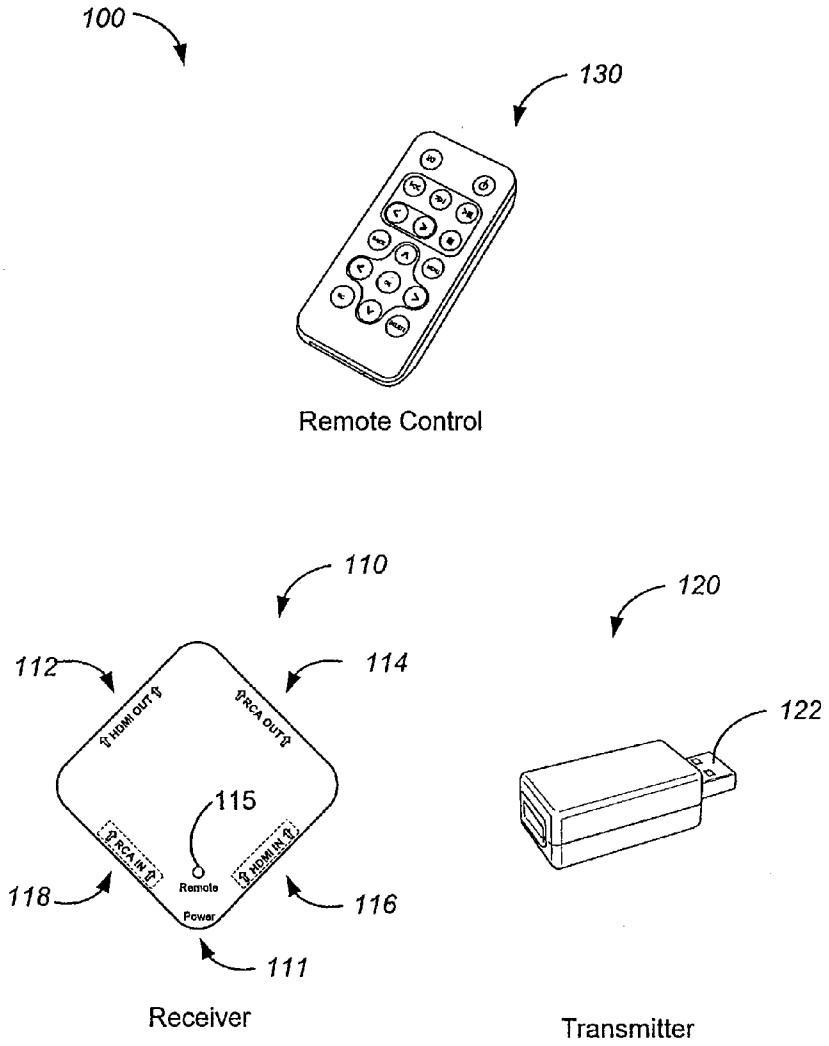

YEALINK EX. 1027

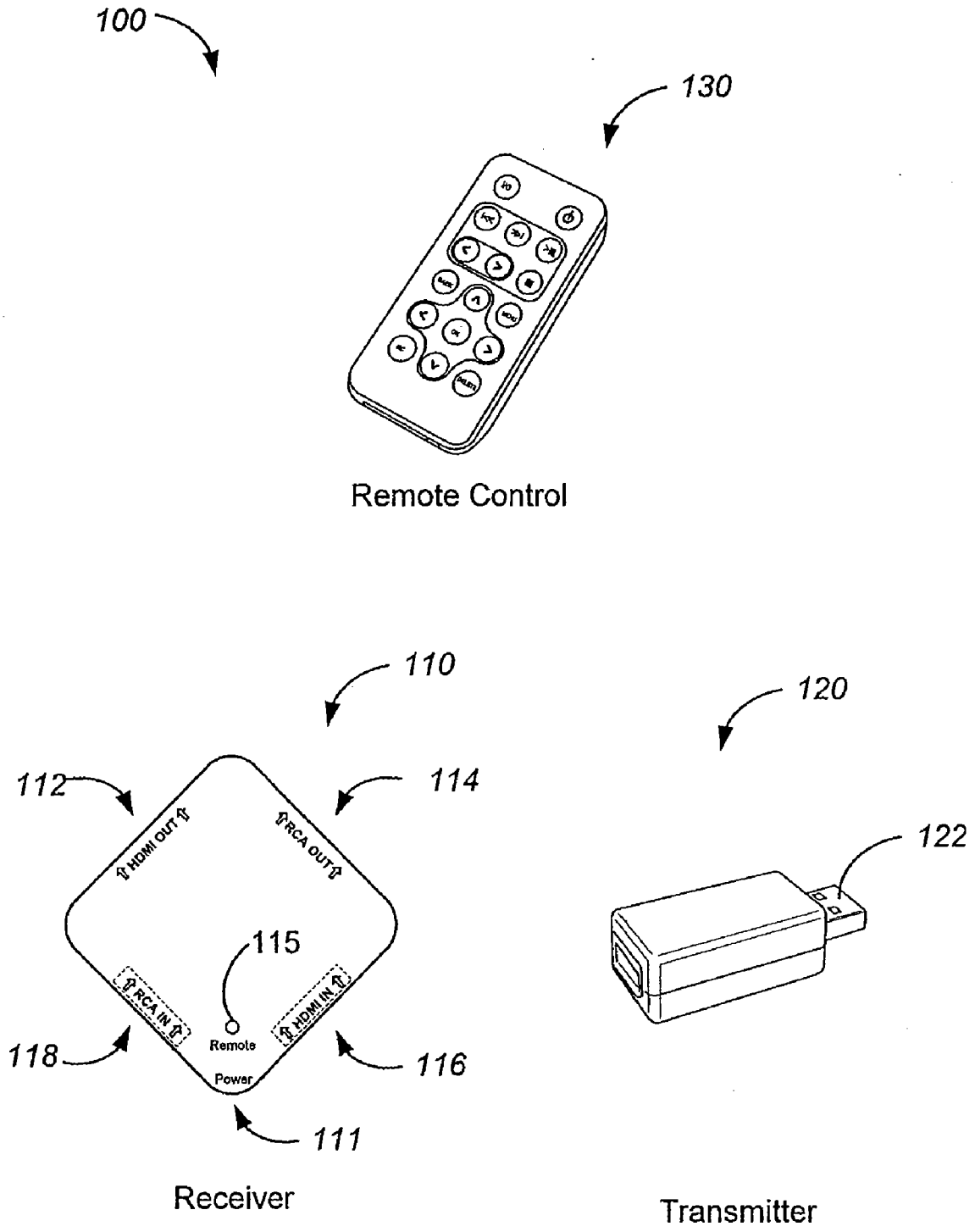
100
130
Remote Control
110
120
112
114
HDMI OUT
RCA OUT
122
115
RCA IN
HDMI IN
Remote
Power
118
116
111
Receiver
Transmitter

FIG. 1

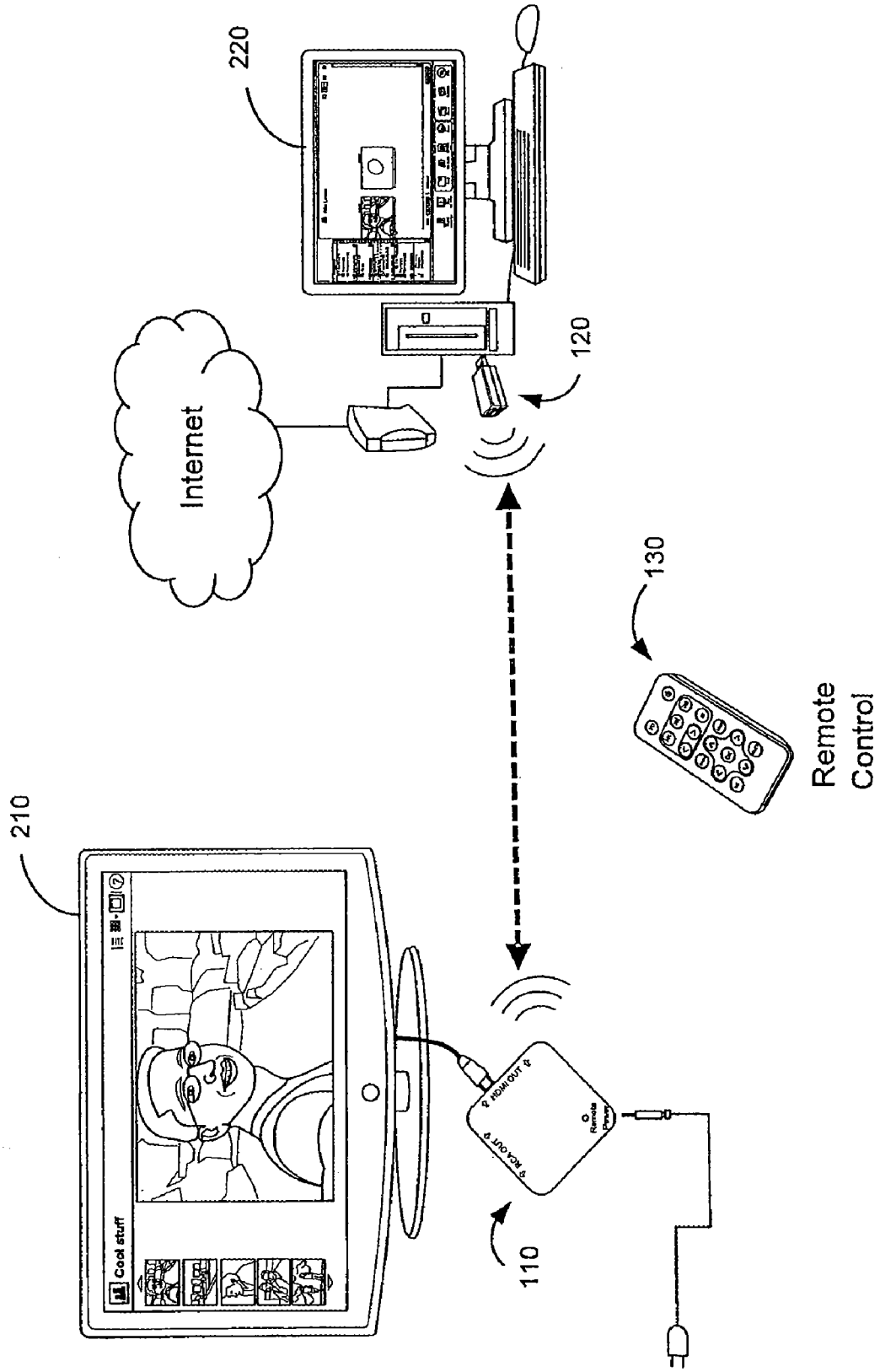
220
Internet
120
130
Remote Control
210
Cool stuff
HDMI OUT
RCA OUT
Remote Power
110

FIG. 2

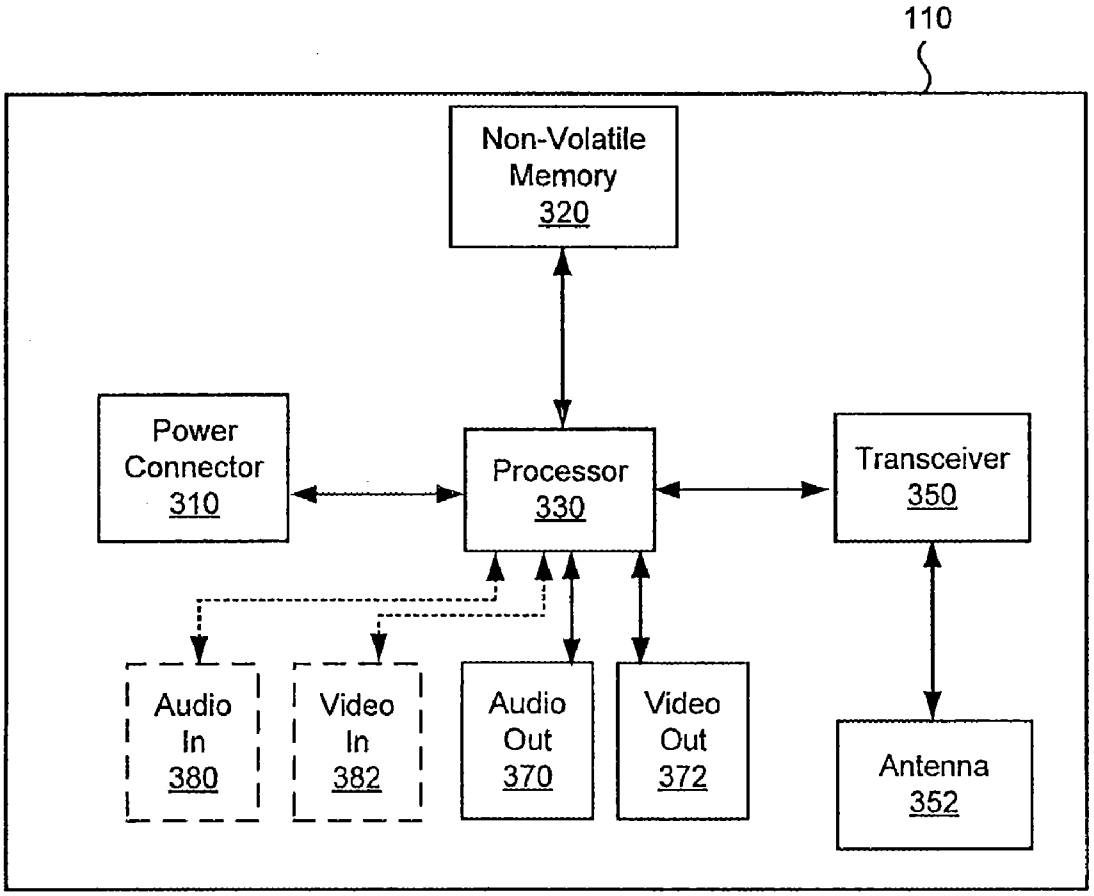
110
Non-Volatile Memory 320
Power Connector 310
Processor 330
Transceiver 350
Audio In 380
Video In 382
Audio Out 370
Video Out 372
Antenna 352

FIG. 3

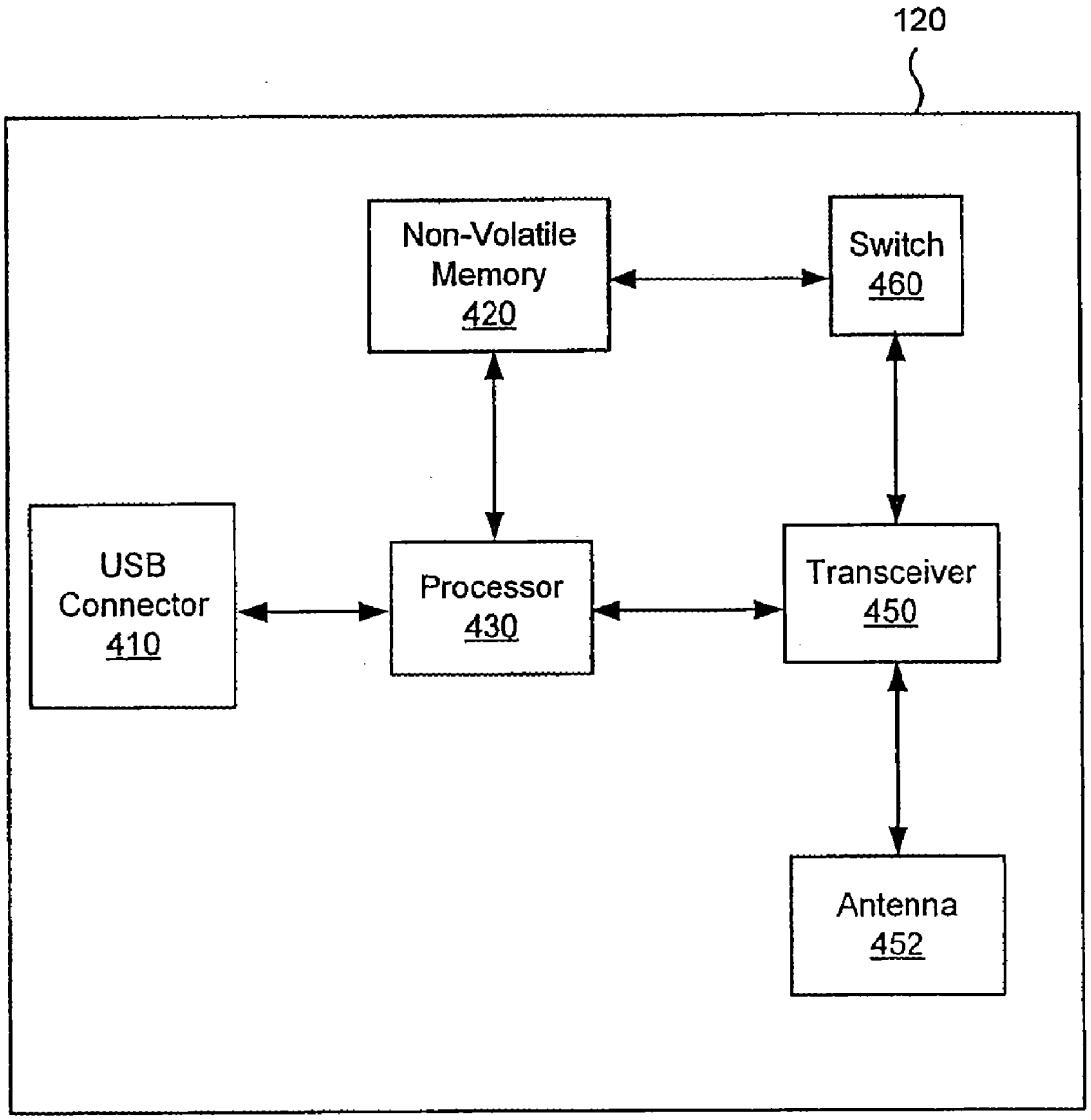
120
Non-Volatile Memory 420
Switch 460
USB Connector 410
Processor 430
Transceiver 450
Antenna 452

FIG. 4

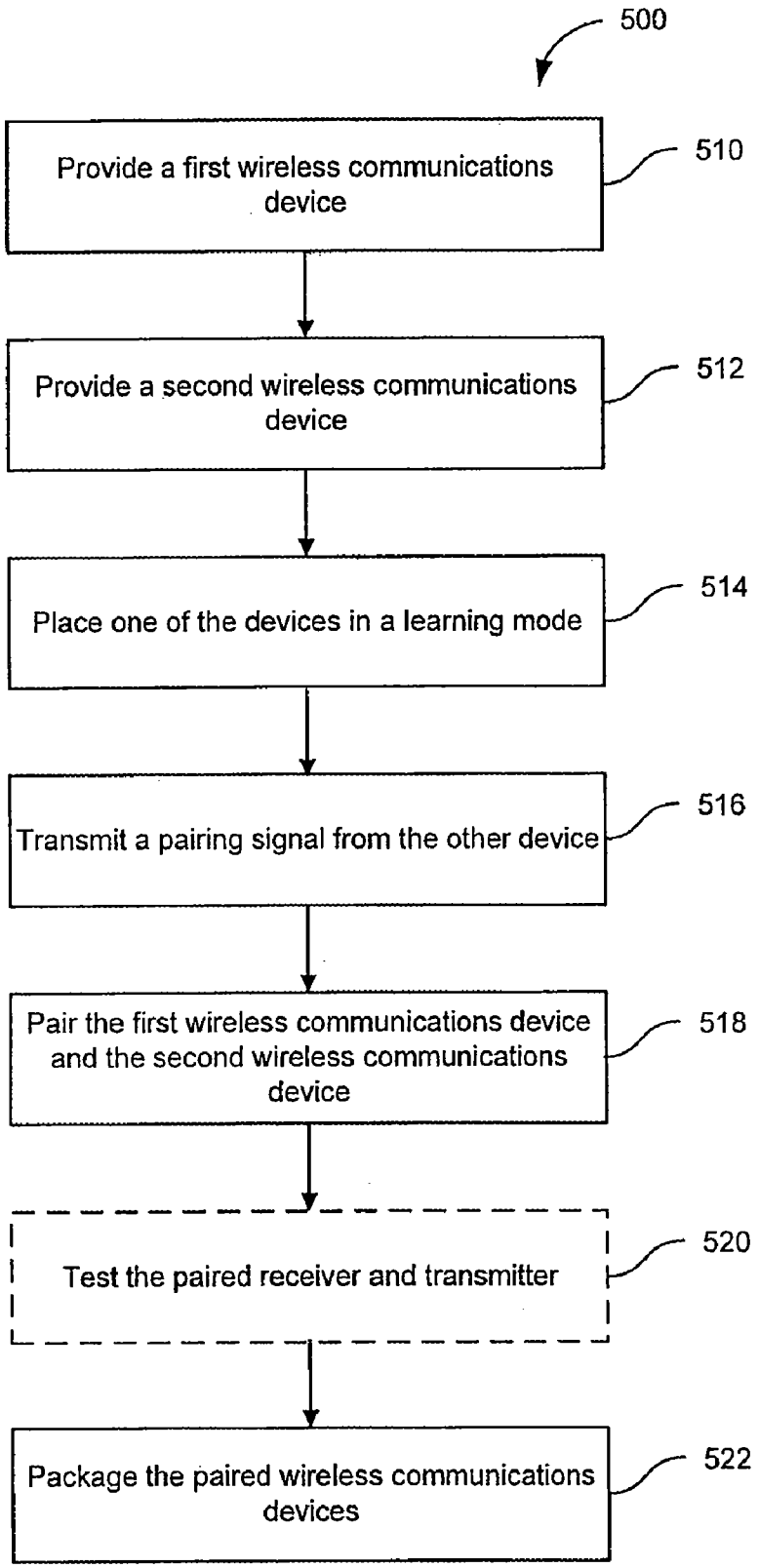
500
Provide a first wireless communications device
510
Provide a second wireless communications device
512
Place one of the devices in a learning mode
514
Transmit a pairing signal from the other device
516
Pair the first wireless communications device and the second wireless communications device
518
Test the paired receiver and transmitter
520
Package the paired wireless communications devices
522

FIG. 5

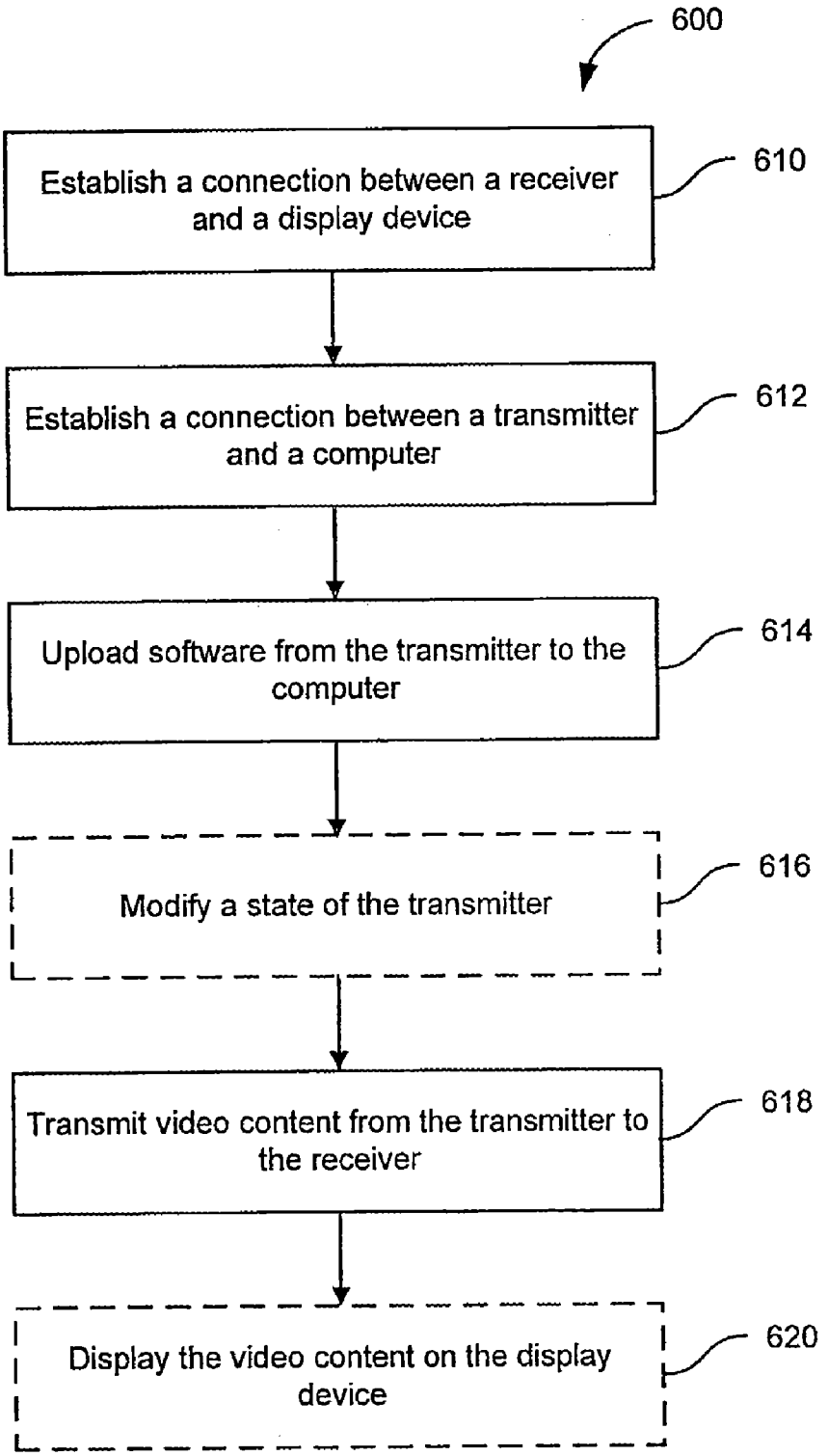
600
Establish a connection between a receiver and a display device
610
Establish a connection between a transmitter and a computer
612
Upload software from the transmitter to the computer
614
Modify a state of the transmitter
616
Transmit video content from the transmitter to the receiver
618
Display the video content on the display device
620

FIG. 6

MANAGEMENT AND DISPLAY OF VIDEO CONTENT

CROSS-REFERENCE TO RELATED APPLICATIONS

[0001] This application claims benefit of U.S. provisional patent application Ser. No. 61/179,688 filed on May 19, 2009, which is hereby incorporated herein by reference.

BACKGROUND OF THE INVENTION

[0002] Digital video cameras enable a user to capture video footage, which can be viewed on a computer or television, uploaded to video sharing websites, or recorded onto a recording medium such as a DVD. Typically, transferring video footage from a digital video camera to an external device such as a television or computer requires the use of a video cable and software to connect the digital video camera to the external device. Some models of digital video cameras provide a built-in Universal Serial Bus (USB) connector to facilitate transfer of video footage from/to the digital video camera and the external device. In order to view video footage on a television, a user typically uses a cable (e.g., a cable with both video and audio connectors) to connect the digital video camera to the inputs of the television, and then uses a user interface on the digital video camera to initiate and control the playback of the video footage displayed on the television. Some digital video cameras also utilize a remote control to supplement or replace the user interface on the digital video camera during playback to the television. This method of viewing video footage on a television presents several difficulties, including either using the batteries in the digital video camera or providing external power to the digital video camera during playback, positioning of the digital video camera close to the television while the user is typically sitting farther from the television during video playback, and the like.

[0003] If the user has already downloaded the video content recorded on the digital video camera to a computer, the video content can be viewed on the computer display. However, many users prefer to watch video footage on a television, which is typically located at a distance (e.g., in a separate room) from the computer. One approach is to use the computer to burn a digital versatile disc (DVD) including the video content. However, burning a DVD is a complicated operation for some users and requires use of DVD media. Additionally, DVDs have limits on the length of videos that can be stored on the DVD, typically one or two hours of video. Thus, for video footage of longer durations, multiple DVDs are typically required. Another approach is to transmit the video footage from the computer to the television. 802.11-based media extenders have been developed for this purpose. Using 802.11-based wireless networks is a challenging endeavor for many users. Setting up the network is a complicated process that many users find difficult and frustrating, including issues related to firewalls, port forwarding, dynamic Domain Name System (DNS), etc. The challenges of setting up and operating 802.11-based networks is a contributing factor to the return rate of wireless networking equipment being among the highest of any segment of the consumer electronics industry.

[0004] Despite the capabilities of currently available systems, the viewing experience of digital video for many users is less than desirable. Thus, there is a need in the art for improved methods and systems for viewing video footage on a display device.

SUMMARY

[0005] According to embodiments of the present invention, video systems are provided. More specifically, embodiments of the present invention relate to methods and systems for transmitting video footage from a source to a display device. Merely by way of example, embodiments of the invention are applied to a communications system including a transmitter coupled to a computer and a receiver coupled to a display device such as a television. The methods and techniques can be applied to video footage stored on web servers and the like.

[0006] According to an embodiment of the present invention, a system for transmitting video content from a computer to a display device is provided. The system includes a receiver operable to communicate with the display device. The receiver includes a first wireless transceiver, a video output, and an audio output. The system also includes a transmitter operable to communicate with the computer. The transmitter includes a second wireless transceiver. The receiver and the transmitter are operable to perform two-way wireless communication with each other.

[0007] According to another embodiment of the present invention, a method of manufacturing a communications system package is provided. The method includes providing a first wireless communications device comprising a first wireless transceiver, a video output, and an audio output and providing a second wireless communications device comprising a second wireless transceiver and a memory. The method also includes defining at least one of the first wireless communications device or the second wireless communications device as a wireless communications learning device, placing the wireless communications learning device in a wireless communications learning mode, and transmitting a pairing signal from at least one of the first wireless transceiver or the second wireless transceiver to the wireless communications learning device. The method further includes receiving the pairing signal at the wireless communications learning device, pairing the first wireless communications device and the second wireless communications device based on the pairing signal, and packaging the paired first wireless communications device and the second wireless communications device in the communications system package.

[0008] According to yet another embodiment of the present invention, a method of transmitting video content is provided. The method includes establishing a connection between a receiver and a display device. The receiver includes a first wireless transceiver, a video output, and an audio output. The method also includes establishing a connection between a transmitter and a computer. The transmitter includes a second wireless transceiver and memory and the transmitter is operable to operate in a first mode and a second mode. The method further includes uploading software from the memory of the transmitter to the computer while operating in the first mode and transmitting the video content from the transmitter to the receiver while operating in the second mode.

[0009] Many benefits are achieved by way of embodiments of the present invention over conventional techniques. For example, embodiments of the present invention provide an enhanced user experience in comparison with conventional wireless communications networks. Additionally, embodiments provide a user with the ability to conveniently view video footage stored on a computer or a web server on a television without having to perform any wireless network

setup procedures. As an example, embodiments of the present invention provide a simple and reliable way for viewing videos, movies, photos, and other media on a home television. Utilizing the embodiments described herein, consumers can effectively bring their multimedia content onto their primary viewing device (i.e., the TV) and enjoy this media in a comfortable setting such as a living room. These and other embodiments of the invention along with many of its advantages and features are described in more detail in conjunction with the text below and attached figures.

BRIEF DESCRIPTION OF THE DRAWINGS

[0010] FIG. **1** is a simplified illustration of elements of a communications system, according to an embodiment of the present invention;

[0011] FIG. **2** is a simplified illustration of an exemplary use of the communications system, according to an embodiment of the present invention;

[0012] FIG. **3** is a simplified schematic diagram of a receiver, according to an embodiment of the present invention;

[0013] FIG. **4** is a simplified schematic diagram of a transmitter, according to an embodiment of the present invention;

[0014] FIG. **5** is a simplified flowchart illustrating a method of manufacturing the communications system, according to an embodiment of the present invention; and

[0015] FIG. **6** is a simplified flowchart illustrating a method of operating a communications system, according to an embodiment of the present invention.

DESCRIPTION OF EXAMPLE EMBODIMENTS

[0016] FIG. **1** is a simplified illustration of elements of a communications system **100**, according to an embodiment of the present invention. The communications system **100** includes a receiver **110** operable to communicate with a display device. The receiver **110**, which may be a transceiver, includes the ability to both transmit and to receive data from a matched transceiver (i.e., transmitter **120**). Because receiving data for display on the display device is the primary function of the receiver **110**, it is referred to as a receiver, despite the fact that in some embodiments the receiver **110** includes the functionality of transmitting data as well. In one embodiment, the receiver **110** includes a wireless transceiver **350** as illustrated in FIG. **3**. The receiver **110** also includes one or more video outputs and one or more audio outputs as described more fully below. As shown in FIG. **1**, the receiver includes a High-Definition Multimedia Interface (HDMI) output **112** that carries both audio and video signals, as well as RCA outputs **114**, including separate output ports for composite video and stereo audio (left and right). In another embodiment, component video outputs may be provided as appropriate to the particular application. Preferably, the RCA audio outputs will be active concurrently with the HDMI output so that the RCA audio outputs can be used in parallel with the HDMI output. The receiver includes a power port **111** to receive power from a power source and to power the various components of the receiver **110**.

[0017] The communications system **100** also includes a transmitter **120**. The transmitter **120**, which may also be a transceiver, includes the ability to both transmit and receive data from a matched transceiver (i.e., receiver **110**). Because transmitting data for subsequent display on the display device is, in some embodiments, the primary function of the transmitter **120**, the transmitter **120** is referred to as a "transmitter," despite the fact that the transmitter **120** includes the functionality of receiving data as well. In a particular embodiment, the transmitter **120** is a dongle including a connector **122** compliant with the Universal Serial Bus (USB) standard and operable to be inserted into a USB port of a computer, for example, a personal computer. As described in greater detail in FIG. **4**, the transmitter **120** includes a wireless transceiver **450** that is operable to transmit data from the computer to the receiver **110**. For example, the data may include video and audio data for display on the display device.

[0018] According to embodiments of the present invention, the receiver **110** and the transmitter **120** are pre-paired during the manufacturing process. Thus, when a user first sets up the communications systems, there is no need for the user to pair or define settings associated with the communication that occurs between the receiver **110** and the transmitter **120**. This embodiment contrasts with conventional wireless networking equipment, for which a user typically needs to manually pair the various devices prior to use. As an example, in a conventional 802.11-based network, a user needs to set the Service Set Identifier (SSID), password, and/or other parameters that enable the various network elements to communicate. In the embodiments described herein, such settings are pre-set at the time of manufacturing as part of the manufacturing process or at other time prior to delivery to the user. Thus, when the user first installs the equipment, the parameters necessary for two-way communications between the receiver **110** and the transmitter **120** are already set. As a result, the user is provided with a fully functioning communications system straight "out-of-the-box."

[0019] In some embodiments, the communications system **100** may also include a remote control **130**. The remote control is operable to communicate with receiver **110** and is typically used to control the playback of video footage on the display device. Like the transmitter **120**, the remote control **130** is also pre-paired with the receiver **110** prior to delivery to the user. In some embodiments, the remote control **130** is also able to control operation of the transmitter **120**, although this feature is not required by embodiments of the present invention. As described in more detail in FIG. **2**, the receiver **110**, transmitter **120**, and/or the remote control **130** provide a system used to view video footage stored in various manners, such as on a computer, stored on a remote site such as a web server, or the like.

[0020] The remote control **130** includes user input buttons including play, pause, fast forward, rewind, next track, previous track, volume up, volume down, mute, and the like. Other functionality as appropriate to the particular embodiment can be implemented in the remote control **130** as needed. One of ordinary skill in the art would recognize many variations, modifications, and alternatives.

[0021] FIG. **2** is a simplified illustration of an exemplary use of the communications system, according to an embodiment of the present invention. As shown, the receiver **110** is connected to display device **210**, for example, a television or other video display monitor. The embodiment illustrated in FIG. **2** utilizes an HDMI cable carrying both audio and video data from the receiver **110** to the display device **210**. In one embodiment, in order to view content received by the receiver **110**, the user may select an input on the display device **210** corresponding to the input connector to which the HDMI cable or other cable(s) is connected. In another embodiment, composite video and stereo audio RCA outputs, component

video outputs, analog audio/visual outputs, or the like are utilized. In one embodiment, the receiver **110** communicates with the transmitter **120** as a dedicated solution. One of the benefits provided by embodiments of the present invention is that the various components of communications system **100** can be configured to not interact with other, non-system components and devices. In a typical use case of an embodiment of the invention, there may be additional wireless devices in the proximity of communication system **100**. However, embodiments of the present invention provide a "walled garden" approach in which no configuration actions on the part of the user are needed. Because the receiver **110**, the transmitter **120**, and/or the remote control **130** are pre-paired prior to shipment from the manufacturer and/or delivery to the user, the user does not need to configure these devices and the user experience is more streamlined—the user just plugs-in the devices and the operate as intended. As an example, the receiver **110** is coupled to a television using an HDMI cable, the transmitter **120** is inserted into the USB port of a computer containing video files, and with no wireless setup actions, the user is able to watch the videos on the television. This contrasts sharply with conventional wireless networking system setup procedures.

[0022] Target customers for the products described herein include owners of digital video cameras. Examples of digital video cameras include the Flip MinoHD™, Flip Mino™, Flip UltraHD™, and/or Flip Ultra™ digital video cameras provided by Pure Digital Technologies, Inc. Additionally, target customers may include owners of other digital video cameras. As described more fully in relation to FIG. **4**, the transmitter **120** may includes software that is configured to access video footage stored on a computer or on a web server accessible through the internet. In some embodiments, when the transmitter **120** is plugged into the computer for the first time, the software may be uploaded to and installed to the computer (automatically in some embodiments). Using the installed software, the user is able to access video footage or other media stored on the computer, transmit the media to the receiver **110**, and view and/or listen to the media on the display device **210**. In other embodiments, a user is able to download the appropriate software from the internet.

[0023] The ease of installation and use enables users that are not particularly technology savvy to enjoy the benefits of more widely present video footage. As an example, it may be desirable to share videos on a user's computer with a family member without a digital video camera or a wireless network, but with a television, a computer, and an internet connection. The family member purchases a system as described herein, connects the receiver **110** to the television and connects the transmitter **120** to the computer. After the installation of software resident on the transmitter, typically only requiring an acceptance of a click-through license agreement by the family member, the family member is able to receive videos from the user and then watch them on their television. The installation process may only require an acceptance of a click-through license agreement by the family member. In other implementations, a user account may be created or other setup procedures may be performed. Other content that is downloaded to the computer can also be viewed on the television, which is typically a more comfortable viewing environment than the computer, using the communications system described herein. It should be noted that various methods for identifying the receiver **110** as a network element may be used. For example, the receiver **110** may have an IP address pre-assigned prior to delivery to the user, may be associated with a login name/password stored in a database, an email address, or the like. In these implementations, when content is shared with the pre-assigned IP address or login information, the content will be made available to that particular receiver **110**.

[0024] Embodiments of the present invention provide for a variety of sources of media for viewing using communications system **100**. As an example, videos may be stored on the computer or on a web server accessible through the internet. Additionally, in some embodiments, a user is able to define one or more channels and associate other users with these channels. Video content is then shared using these channels to the associated users.

[0025] Although the system illustrated in FIG. **2** includes receiver **110**, other embodiments replace the receiver **110** with a router that is operable to communicate with the transmitter **120**. The router can serve other functions than delivering content to the display device, for example, other wireless communications functions. The router in this embodiment is operable to interact with not only the transmitter but the software resident on the computer.

[0026] Referring once again to the embodiment shown in FIG. **2**, the display device **210** may show a user interface generated either by the receiver **110**, the transmitter **120**, the computer **220**, or some combination thereof. As an example, the user interface displayed could be a version of software executing on the computer **220** modified for display on a television. Depending on the particular implementation, the processing load for generating the user interface and processing of the video signal may be distributed between the receiver **110** and/or the combination of the transmitter **120** and/or computer **220**. Since the computer typically has significant computing resources available, a specific embodiment utilizes the computer **220** to perform the vast majority of processing, merely relying on the receiver **110** to receive and display the received data. In this specific embodiment, the computer renders the information to be displayed as the user interface, the computer renders video footage at **30** frames per second (or another appropriate frame rate) that is broadcast to the television, and the like. Since a broadcast-ready video signal is transmitted to the receiver in this embodiment, the receiver only needs to pass this video signal through to the display device, greatly reducing the processing load on the receiver.

[0027] In another embodiment, at the other end of the processing spectrum, much of the processing may be performed in the receiver **110**. In this alternative embodiment, the receiver **110** may have significant computing resources. Video processing, buffering, storage, and the like may be performed in the receiver. Other embodiments also fall at other points along the spectrum, dividing the processing tasks between the computer **220**, the transmitter **120**, and the receiver **110**.

[0028] As an example use case, a user uses remote control **130** to control the receiver **110**. The user interface is displayed on the display device **210** and two-way communication is established between the receiver **110** and the transmitter **120**. Requests from the user may pass from the remote control **130** to the receiver **110**, through the wireless connection to the transmitter **120**, and then from the transmitter **120** to the computer **220**. For an application executing on the computer **220**, information related to the available videos (i.e., metadata) may be transmitted to the receiver **110** and displayed on

the display device **210**. Using the remote control **130**, the user may select a video to be played and the selected video footage may be transmitted from the computer **220** through the transmitter **120** to the receiver **110** and then displayed on the display device **210**.

[0029] In various embodiments, metadata associated with the video content stored on the computer **220** or on the Internet is available to the system and can be used to sort, categorize, or otherwise manage the video content. As an example, if a particular video is marked as a favorite, given a name, placed in one or more particular folders, or the like, this information may be available to the user through the user interface displayed on the display device **210**. The availability of this metadata contrasts with conventional media extenders in which only video content is available. Additionally, since embodiments of the present invention provide custom software solutions, the methods and systems described herein make available proprietary features such as user-defined channels that are not available using conventional techniques.

[0030] In one embodiment, the user interface displayed on the display device **210** is simple to use and requires little or no training. Some embodiments provide for customization of the user interface although this is not required by embodiments of the present invention. As an example, keyboard shortcuts could be included, although not used by all users. Additionally, in some embodiments, changes made by a user interacting with the software executing on the computer **220** may be reflected in the user interface displayed to the user on the display device **210**.

[0031] In some embodiments, the communications channel between the transmitter **120** and the receiver **110** is provided in accordance with commercially available wireless communications standards. For example, using the IEEE 802.11n wireless standard, bandwidth suitable for high definition (HD) videos (e.g., 1012 megabits per second) is provided. Other wireless standards providing suitable bandwidth can also be utilized. One of ordinary skill in the art would recognize many variations, modifications, and alternatives.

[0032] In some implementations, the bandwidth of the communications channel can be conserved by performing some video processing at the receiver **110**. For example, if video content is stored on the computer **220** at a resolution of 480p, up-scaling could be performed on the receiver **110** to provide a 720p signal for display on the display device **210** (e.g., the television). A benefit of using an HDMI connector to couple the receiver **110** and the display device **210** is that the television is able to scale video content received over an HDMI connection to a scale appropriate for the particular television. For example, if the television can display 1080p video content and the content provided by the HDMI connection is 720p, then the television can upscale the content to 1080p for display.

[0033] Embodiments of the present invention provide for personalization of content provided in channels the user has established. For example, if a channel is associated with a hockey team of a user, the display on the display device **210** could be personalized with hockey-related themes or the like. The background of the user interface, generated either at the computer **220** or the receiver **110**, could be hockey-based. More sophisticated environments and attributes related to hockey could also be provided, such as news or information feeds. One of ordinary skill in the art would recognize many variations, modifications, and alternatives.

[0034] According to embodiments of the present invention, the connection between the remote control **130** and the receiver **110** is a radio frequency (RF) connection so that line-of-sight is not required between the remote control **130** and the receiver **110**. This feature enables the receiver **110** to be placed at a location behind other components, for example, at the back of an entertainment center in a user's home. Thus, the receiver **110** does not have to be a "front row" device, competing for shelf space with other audio-visual system components. In addition to non line-of-sight communications, the range for RF connections is typically greater than that available with infrared connections. The RF nature of the remote control **130** allows the remote control to also be used in conjunction with the transmitter **120**, which may be coupled to a computer **220** that is not located in the room with the receiver **110** and display device **210**. In an alternative embodiment, the remote control operates using infrared technology.

[0035] The pre-pairing of the remote control with the receiver also solves potential problems with cross-talk between adjacent systems. As an example, if a user is installing communications system **100** in an apartment complex in which another user has already installed a similar communications system, it would be undesirable to have one user's remote control controlling another user's receiver. The pre-pairing of the remote control and receiver during manufacturing prevents this undesirable cross-talk, thereby enhancing the user experience.

[0036] In one embodiment, the receiver is configured to operate in a "pass-through" mode. In the pass-through mode, the receiver is installed between another user device (e.g., a set-top box, a DVD player, or the like) and the display device (e.g., a television). The signal from the user device passes through the receiver during normal operation of the user device. However, when the receiver begins to receive data from the transmitter, a switch in the receiver switches the video path from the user device to the transmitter. In another embodiment, when the receiver is powered on, the receiver could switch the video path. In yet another embodiment, the switch includes a sensor responsive to incoming video signals and switches to the active video signal, with priority being given to video from the transmitter. In these embodiments, the user does not need to switch the input on the display device in order to view content received by the receiver. Referring to FIG. **1**, an optional pass-through HDMI input **116** and optional pass-through RCA inputs **118** are illustrated. In other embodiments, these optional inputs are not utilized and data is received at the receiver using only the wireless connection to the transmitter.

[0037] In addition to switching from one video input to another video input in the pass-through configuration, overlay technologies are included within the scope of the present invention. Using these overlay technologies, a signal from a set-top box or other user device could be provided to the television, but overlaid with a signal from the transmitter. Typically, the overlaying of the signal would be performed using a processor in the receiver and would not involve processing of the video signal received from the set-top box, but merely overlaying of an additional signal. As an example, if a new video is available for viewing, a logo could be displayed on the television, overlaid on the video signal from the set-top box, indicating the availability of the new video. One of ordinary skill in the art would recognize many variations, modifications, and alternatives.

[0038] According to some embodiments of the present invention, status indicators **115** are provided on the receiver, through the user interface, or combinations thereof. As an example, LED status indicators **115** are illustrated on the receiver in FIG. **1** and may be used to indicate lack of connection to a paired device (e.g., a transmitter or remote control), presence of connection, but at a data rate unsuitable for video signals or certain types of video signals (e.g., HD signals), or the presence of a suitable connection, among others. Additional status indicators could be provided on the transmitter indicating similar or other characteristics. Moreover, status indicators could be provided through software on the computer, delivered to the user through the user interface.

[0039] It should be noted that communications both downstream (i.e., transmitter to receiver) and upstream (i.e., receiver to transmitter) are provided by embodiments of the present invention. In addition to control commands transmitted from the remote control to the receiver and then to the transmitter, status information is also transmitted upstream, providing the user with enhanced control in comparison with conventional systems.

[0040] Utilizing the system illustrated in FIG. **2**, users can enjoy multimedia content after minimal setup requiring little technical know-how. The system includes one or more of the following features and benefits: (1) no cables between the TV and the computer; (2) no need for wireless network setup or configuration by the user; (3) no complex software installation or online setup; (4) no long delays, video download, or general "wait time;" and/or (5) completely secure (e.g., no one else can view personal videos). Once the system is operational, in some embodiments, the user can access some or all of the videos, movies, and/or photos stored on their computer, as well as online content accessible through the Internet. Using the remote control, users can easily play back videos on their TV as well as potentially interact with the computer, opening up many possibilities for future features and services.

[0041] The system illustrated in FIG. **2** can be characterized by a number of technical specifications. The following specifications are not intended to limit the scope of embodiments of the present invention but merely to provide an example of system specifications for a particular embodiment. Specifications for the overall system are provided in Table 1, specifications for the receiver are provided in Table 2, specifications for the transmitter are provided in Table 3, and specifications for the remote control are provided in Table 4.

TABLE 1

Feature	Specification
Wireless Range	Up to 200 ft with clear line of sight with up to 50 ft reduction per wall (construction material dependent)
Wireless Bandwidth	12 Mbits/sec
Wireless Security	Proprietary streams; No access to computer through transmitter
Wireless Interference	Compliance with FCC and WiFi requirements
Pairing	Pre-pairing of receiver, transmitter, and remote control as a component of the manufacturing process
Response Durations	No longer than 3 seconds of latency for starting playback on the display device; Minimal latency for selection/navigation, preferably less than 1/10th of a second; Pause and continue playing - nearly instantaneous; Skip next/previous - up to 3 seconds; Enter new folder (populate one screen's worth of thumbnails) - nearly instantaneous; Display a screen's worth of folder names -- nearly instantaneous; Boot time for receiver - up to 10 seconds; Initial sync or re-sync between transmitter and receiver - nearly instantaneous feedback that syncing is underway, syncing complete within 5 seconds.
Localization	Country specific
Co-existence	Multiple systems can co-exist within range of each other; no cross-talk between systems
Updates	Software and firmware update process similar to Flip camcorder products; Receiver updates are sent remotely via wireless connection; Remote control and transmitter are not anticipated to require firmware upgrades
Video Pass-through	Overlay of graphics on video passed through receiver; Notification of newly arrived videos
Video Controls	Play; Pause; Fast Forward; Rewind; Skip next/previous
Out-of-the-box user experience	Components can be connected in any order; On-screen guide (PC or TV) to assist with setup and/or troubleshooting; Signal strength indicator on receiver and/or shown graphically as a signal meter on the TV and/or PC as part of setup and troubleshooting

TABLE 2

Feature	Specification
Inputs	Optional HDMI; Optional RCA Composite Video + Stereo Audio; Power
Outputs	HDMI; RCA Composite Video + Stereo Audio; Optional DVI
Optional Pass-through	RCA Composite Video + Stereo Audio pass-through; HDMI pass-through; Pass-through functionality is active when receiver is not in use
Display Resolution	NTSC: 720 × 480 interlaced, 30 fps; PAL: 720 × 576 interlaced, 25 fps; HDMI (US): 1280 × 720 progressive, 30 fps; HDMI (EU): 1280 × 720 progressive, 25 fps
TV Standards	NTSC; PAL
Status LED(s)	OK (Wireless connection; Acceptable bandwidth); Reduced Bandwidth; (Wireless connection; Bandwidth lower than specification); No connection (No wireless connection); Power indicator
File Format Playback Compatibility	640 × 480, 30 fps MPEG-4 AVI; 640 × 480, 30 fps MPEG-4 AVI; 1280 × 720, 30 fps H.264 MP4; 640 × 480, 30 fps H.264 MP4; 480 × 360 H.264 MP4; 480 × 270 H.264 MP4; 1280 × 720, 30 fps H.264 MP4; 640 × 480, 30 fps H.264 MP4
Boot Time	Less than 10 seconds
Playback Mode	Pause/Play/Previous Clip/Next Clip/Exit; Ability to mark favorites
Screen Saver	Plays videos with no audio

TABLE 3

Feature	Specification
Range	Non-line of sight (RF); Up to 50 ft
Battery Life	More than 1 year
Battery Indicator	Notification to receiver when batteries are low
Buttons	Up/Down/Left/Right; Select/Enter
Universal Compatibility	Programmable into universal remote controls
Find my Remote	Activated through software on computer; Beeps beeper in remote

TABLE 4

Feature	Specification
Interface	USB 2.0
Power	USB bus power
Co-existence	Can co-exist with Flip camcorder
Storage	256 MB capacity; Pre-loaded with software

[0042] FIG. **3** is a simplified schematic diagram of a receiver **110**, according to an embodiment of the present invention. The receiver **110** includes a power connector **310** configured to receive power from a power supply, such as a 110-volt electric supply. Typically, a power port **111** on the side of the receiver **110**, as illustrated in FIG. **1**, is utilized as the power connector **310**. The receiver **110** also includes processor **330** and transceiver **350**, which is connected to antenna **352**. The transceiver **350** is operable to provide two-way communications with a matched transceiver in the transmitter **120**. In some embodiments, the receiver **110** provides for two-way communications. However, since the dominant operation of the receiver is receiving video content transmitted by the transmitter **120**, the nomenclature of "receiver" is used herein to describe this component of the communications system.

[0043] The receiver **110** includes one or more audio outputs **370** and one or more video outputs **372**. The audio outputs **370** provide an audio signal to a display device, such as a television. The video outputs **372** provide a video signal to the display device. A wide variety of audio and video outputs are included within the scope of embodiments of the present invention. For example, the audio and video outputs can be combined in an HDMI output configured to connect to an HDMI cable. Since HDMI cables carry both audio and video signals, only a single cable is needed to connect the receiver **110** to the display device. In other applications, RCA component video outputs, optical-fiber based outputs, composite video outputs, S-Video outputs, or the like are utilized. One of ordinary skill in the art would recognize many variations, modifications, and alternatives.

[0044] Optional audio inputs **380** and video inputs **382** are illustrated in FIG. **3**. These optional inputs, which correspond to optional HDMI input **116** and optional RCA inputs **118** illustrated in FIG. **1**, are utilized when the receiver **110** is employed in a "pass-through" configuration. In a pass-through configuration, audio and video signals from a device, such as a set-top box, are provided to the receiver **110**, which then passes these signals to the audio out **370** and the video out **372** in a first mode of operation. When video content from the transmitter **120** is received by the transceiver **350**, the signal passed to the audio and video out is changed to display the video content received through the wireless connection on the display device. In some embodiments, this is a second mode of operation. Thus, in configurations where the number of inputs to the display device is limited, only a single input or cable is needed to display content from either the device or from the transmitter **120**. The mechanism for transitioning from one input signal to another will depend on the particular application and should not be understood to limit embodiments of the present invention. The receiver may include non-volatile memory **320** used to store settings and the like. In a particular embodiment of the present invention, the receiver **110** may be integrated into the display device, thus further reducing complexity and the need of providing a cable between the receiver **110** and the display device.

[0045] FIG. **4** is a simplified schematic diagram of a transmitter **120**, according to an embodiment of the present invention. The transmitter **120** includes a USB connector **410** connected to processor **430**. Although the USB connector **410** is illustrated in FIG. **4**, the USB connector **410** is not required by embodiments of the present invention and other suitable communications protocols and standards can be utilized by other embodiments of the present invention. The ubiquity of the USB standard and the availability of USB ports, either on the computer or on a USB extender connected to the computer, make the use of a USB connection a suitable connector for embodiments of the present invention. The transmitter **120** also includes transceiver **450** and antenna **452**, providing for two-way communications with the receiver **110** paired with the transmitter **120**. In some embodiments, the transceiver **450** and antenna **452** provide for two-way communications. However, since the dominant operation of the transmitter **120** is transmitting video content to the receiver **110**, the nomenclature of "transmitter" is used to describe this component of the communications system.

[0046] In some embodiments, when the transmitter **120** is connected to computer **220** for the first time, the transmitter may identify itself to the computer **220** as a mass storage device, such as a removable disk drive. In one embodiment, for instance, after the transmitter **120** is coupled to the computer **220**, the transmitter **120** may identify itself as a removable disk drive to an operating system executing on the computer **220**. The operating system can then treat the internal non-volatile memory **420** of the transmitter **120** like any other removable disk. This behavior is similar to the behavior discussed in relation to the camcorder described in U.S. patent application Ser. No. 11/497,039, filed on Jul. 31, 2006, the disclosure of which is hereby incorporated herein by reference in its entirety for all purposes.

[0047] In one embodiment, a resident software application is stored in the non-volatile memory **420** of the transmitter **120**. When a connection between the transmitter **120** and the computer **220** is detected by the computer **220**, an operating system executing on the computer may automatically execute the resident software application. For example, a Windows® operating system may be configured to check the contents of the non-volatile memory of the transmitter for an "autoplay.inf" file upon detecting a connection between the transmitter and the computer. The "autoplay.inf" file then directs the operating system to the resident software application, which is stored in the non-volatile memory **420** of the transmitter **120**. The operating system of the computer **220** then executes the resident software application.

[0048] In some embodiments, upon execution, the resident software application may check the computer **220** to determine whether required software components are available on the computer **220**, and then install the software components in the computer **220** when the software components are not available on the computer **220**. If appropriate software is already installed on the computer **220**, then the resident software application may check the installed software to determine if the software is a current version and then update the computer, if needed. For example, the resident software application may determine whether certain compression/decompression algorithms (codecs) are available on the computer **220**. If the resident software application determines that the codecs are not available on the computer **220**, the resident software application may then automatically install the codecs on the computer **220** without additional user interven-

tion. In other embodiments, the resident software application may wait for verification from a user before installing the software components. The resident software application may also install other software components such as software libraries or application files. The resident software, in one embodiment, may also cause data to be written to memory in the computer **220** for tracking purposes. For instance, the resident software may add entries or keys to the registry of a computer **220** running the Windows® operating system so that upon a subsequent connection to the same computer **220**, the resident software application can simply check the registry entries or keys to determine which codecs or software components were previously installed.

[0049] In one embodiment, the resident software application may produce a graphical user interface (GUI) on a display associated with the computer **220**. The GUI may present a user with graphical controls to help the user to perform various tasks. Such tasks may include playing digital video footage present on the computer **220**, and the like.

[0050] As described above, in some embodiments, during an initial connection, the transmitter **120** may identify itself to the computer **220** as a mass storage device and a resident software application present on the transmitter **120** may be used to install software on the computer **220**. After completion of these tasks, the transmitter **120** may modify its own operation to function as a transmitter **120** of video footage. This dual-purpose use of transmitter **120** differs from conventional systems in which pluggable devices serve only one of the two roles.

[0051] In one embodiment, the processor **430** and switch **460** are operable to convert the use of the transmitter **120** from a mass storage device, as described above, to a wireless transceiver. Logic stored in the non-volatile memory **420** is typically utilized in making this switch from the first state of operation (e.g., mass storage device) to the second state of operation (e.g., wireless transceiver). In an embodiment, after installation of the software on the computer **220**, the transmitter **120** may "eject" itself, ceasing to function as a mass storage device, and may begin operation as a wireless transceiver in communication with receiver **110**.

[0052] It should be noted that, in some embodiments, the transmitter **120** includes not only the functionality of switching from a mass storage device to a wireless transceiver, but also the functionality of switching back to a mass storage device as appropriate. For example, if after use with a first computer, the transmitter is moved to another computer, then the transmitter may repeat the processes described above, acting as a mass storage device, determining if appropriate software is installed, installing and/or updating the software if needed, and/or then switching into the wireless transceiver mode.

[0053] FIG. **5** is a simplified flowchart illustrating a method **500** of manufacturing a communications system package, according to an embodiment of the present invention. The method **500** includes providing a first wireless communications device comprising a first wireless transceiver, a video output, and an audio output (**510**). The method **500** also includes providing a second wireless communications device comprising a second wireless transceiver and a memory (**512**). In one embodiment, as illustrated in FIG. **1**, receiver **110** including the HDMI output **112** and transmitter **120** including USB connector **122** embody exemplary first and second wireless communications devices. At least one of the first wireless communications device or the second wireless communications device is defined as a wireless communications learning device. The wireless communications learning device is placed in a wireless communications learning mode (**514**). In order to associate the receiver and the transmitter with each other as a matched pair, a programming or learning process is performed to pair the devices together. In an embodiment, after the pairing operation described below, the receiver and transmitter are able to perform two-way communication with each other, forming a walled-garden system, as discussed throughout the present specification.

[0054] The method **500** further includes transmitting a pairing signal from at least one of the first wireless transceiver or the second wireless transceiver to the wireless communications learning device (**516**). In one embodiment, the pairing signal is transmitted from the device that was not defined as the learning device to the wireless communications learning device. Subsequently, the pairing signal is received at the wireless communications learning device (**518**). In one embodiment, the pairing signal is transmitted between the first wireless transceiver **350** (as illustrated in FIG. **3**) and the second wireless transceiver **450** (as illustrated in FIG. **4**). Typically, the pairing signal includes an encrypted code that enables a secure communications channel between the paired devices. The first wireless communications device and the second wireless communications device are paired based on the pairing signal (**518**). The pairing of the devices (e.g., receiver **110** and transmitter **120**) during the manufacturing process provides the user with an enhanced experience in comparison to conventional wireless communications systems. Since, in a particular embodiment, the receiver and the transmitter are pre-paired to only work with each other in performing two-way communications, some device functionality is traded-off for greatly improved ease of setup and use. No programming of the device(s) by the end-user or purchaser of the wireless communications system is needed, opening up the use of the system to users with limited technical skills.

[0055] An optional testing process is also included in method **500** in order to verify the success of the pairing operation (**520**). The paired first wireless communications device and the second wireless communications device are packaged in the communications system package (**522**). Since the pairing of the devices is performed as part of the manufacturing process and prior to delivery to the user, the user experience is improved since the user receives a pre-paired communications system that works at delivery. In contrast with conventional wireless systems in which pairing is performed after delivery to the user, embodiments of the present invention provide an ease of setup and use not available with conventional systems.

[0056] It should be appreciated that the specific steps illustrated in FIG. **5** provide a particular method of manufacturing a communications system package according to an embodiment of the present invention. Other sequences of steps may also be performed according to alternative embodiments. For example, alternative embodiments of the present invention may perform the steps outlined above in a different order. Moreover, the individual steps illustrated in FIG. **5** may include multiple sub-steps that may be performed in various sequences as appropriate to the individual step. Furthermore, steps may be added or removed depending on the particular applications. One of ordinary skill in the art would recognize many variations, modifications, and alternatives.

[0057] FIG. **6** is a simplified flowchart illustrating a method **600** of transmitting video content, according to an embodiment of the present invention. The method **600** includes establishing a connection between a receiver and a display device (**610**). The receiver includes a first wireless transceiver, a video output, and an audio output. An exemplary receiver is illustrated as receiver **110** in FIG. **1** in which the video and audio outputs can be combined as an HDMI connector or kept separate in the form of component RCA video/audio outputs. In some embodiments, as described in relation to FIG. **1**, the receiver provides for two-way communications. However, since the dominant operation of the receiver is receiving video content from the transmitter **120**, the nomenclature of "receiver" is used to describe this component of the communications system. A typical display device is a television. Establishing the connection between the receiver and the display device may take the form of connecting the two devices using one or more cables, for example, an HDMI cable.

[0058] The method **600** also includes establishing a connection between a transmitter and a computer (**612**). The transmitter includes a second wireless transceiver and a memory. An exemplary transmitter is transmitter **120** with USB connector **122** (i.e., a USB dongle) illustrated in FIG. **1**. The transmitter is operable to operate in a first mode and a second mode. In some embodiments, as discussed in relation to FIG. **1**, the transmitter provides for two-way communications. However, since the dominant operation of the transmitter is transmitting video content to the receiver **110**, the nomenclature of "transmitter" is used to describe this component of the communications system.

[0059] The transmitter initially operates in a first mode associated with a mass storage device. Thus, when the transmitter is connected to the computer, for example, by plugging the USB connector of the transmitter into a USB port on the computer, the transmitter appears or is registered as a mass storage device in the operating system. In some embodiments, software stored on the memory of the transmitter can be uploaded and installed on the computer while the transmitter is operating in the first mode (**614**). This feature of the transmitter enables for distribution of desired software for use in conjunction with embodiments of the invention.

[0060] The method **600** also includes an optional process of modifying a state of the transmitter (**616**) from a first state to a second state. In the second state, the second wireless transceiver is activated and the mass storage device characteristics of the transmitter are turned off. This can be considered as dismounting or ejecting the mass storage device from the computer. Although the transmitter is not physically disconnected from the computer, the transmitter ceases to appear as a mass storage device in the operating system of the computer. This "ejection" operation is similar to ejecting a mass storage device through operating system commands, at which point the mass storage device ceases to be listed as an available disk. In alternative embodiments, the transmitter continues to be displayed as a mass storage device.

[0061] The method further includes transmitting the video content from the transmitter to the receiver while operating in the second mode (**618**). The second mode of operation continues while the transmitter is connected to the computer. The video content can be displayed on the display device (**620**) as an optional process.

[0062] As illustrated in FIG. **1**, a remote control **130** is provided in some embodiments of the present invention. In these embodiments, the method **600** can include transmitting one or more control signals from the remote control to the receiver. In turn, the one or more control signals, some subset of the control signals, or additional control signals based on the one or more control signals, can be transmitted from the receiver to the transmitter. Thus, user control over software executing on the receiver or executing on the computer can be provided by use of the remote control.

[0063] It should be appreciated that the specific steps illustrated in FIG. **6** provide a particular method of transmitting video content according to an embodiment of the present invention. Other sequences of steps may also be performed according to alternative embodiments. For example, alternative embodiments of the present invention may perform the steps outlined above in a different order. Moreover, the individual steps illustrated in FIG. **6** may include multiple substeps that may be performed in various sequences as appropriate to the individual step. Furthermore, steps may be added or removed depending on the particular applications. One of ordinary skill in the art would recognize many variations, modifications, and alternatives.

[0064] Various embodiments of the invention may be implemented as a program product for use with a computer system. The program(s) of the program product define functions of the embodiments (including the methods described herein) and can be contained on a variety of computer-readable storage media. Illustrative computer-readable storage media include, but are not limited to: (i) non-writable storage media (e.g., read-only memory devices within a computer such as CD-ROM disks readable by a CD-ROM drive, flash memory, ROM chips or any type of solid-state non-volatile semiconductor memory) on which information is permanently stored; and (ii) writable storage media (e.g., floppy disks within a diskette drive or hard-disk drive or any type of solid-state random-access semiconductor memory) on which alterable information is stored.

[0065] It is also understood that the examples and embodiments described herein are for illustrative purposes only and that various modifications or changes in light thereof will be suggested to persons skilled in the art and are to be included within the spirit and purview of this application and scope of the appended claims.

What is claimed is:

1. A method of transmitting video content between a computing device and display device, the method comprising:

establishing a data connection between a receiver unit and the display device, wherein the receiver unit includes a first wireless transceiver and an output port;

establishing a data connection between a transmitter unit and the computing device, wherein the transmitter unit includes a second wireless transceiver and a memory and is configured to perform two-way wireless communications with only the receiver unit and is configured to not perform two-way wireless communications with any other devices; and

transmitting the video content from the transmitter unit to the receiver unit.

2. The method of claim **1**, wherein the transmitter unit is further configured to operate in a mass storage mode, and further comprising the step of transferring software from the memory of the transmitter unit to the computing device.

3. The method of claim **1**, wherein the transmitter unit comprises a Universal Serial Bus (USB) data connector.

4. The method of claim **1**, wherein the output port of the receiver unit comprises a High-Definition Multimedia Interface (HDMI) output port.

5. The method of claim **1**, wherein the receiver unit receives a signal from a remote control that is configured to perform two-way wireless communications with only the receiver unit and is configured to not perform two-way wireless communications with any other devices.

6. The method of claim **1**, wherein the receiver unit and the transmitter unit are configured to share an encrypted code that configures the transmitter unit to perform two-way wireless communications with only the receiver unit and configures the transmitter to not perform two-way wireless communications with any other devices.

7. The method of claim **6**, wherein the encrypted code comprises (a) an Internet Protocol (IP) address associated with the receiver unit, (b) a username and a password, or (c) an email address.

8. The method of claim **1**, further comprising the steps of:

transmitting a pairing signal to the receiver unit to establish two-way wireless communications between the transmitter unit and the receiver unit; and

pairing the transmitter unit and the receiver unit such that the transmitter unit performs two-way wireless communications only with the receiver unit and does not perform two-way wireless communications with any other devices.

9. The method of claim **8**, wherein the receiver unit operates in a wireless communications learning mode when pairing with the transmitter unit.

10. A transmitter unit configured to transmit video content from a computing device to a display device, the transmitter unit comprising:

a data connector configured to couple the transmitter unit to the computing device; and

a transceiver configured to perform two-way wireless communications with a receiver unit that is coupled to the display device and is configured to perform two-way wireless communications with only the receiver unit and is configured to not perform two-way wireless communications with any other devices.

11. The transmitter unit of claim **10**, wherein the data connector comprises a Universal Serial Bus (USB) data connector.

12. The transmitter unit of claim **10**, further comprising a memory storing a software application that is transferred to and installed on the computing device when the transmitter unit is coupled to the computing device for the first time.

13. The transmitter unit of claim **10**, wherein the receiver unit and the transmitter unit are configured to share an encrypted code that configures the transceiver included in the transmitter unit to perform two-way wireless communications with only the receiver unit and configures the transmitter to not perform two-way wireless communications with any other devices.

14. A receiver unit configured to receive video content from a computing device for display on a display device, the receiver unit comprising:

a transceiver configured to perform two-way wireless communications with a transmitter unit that is coupled to the computing device, wherein the transmitter unit is configured to perform two-way wireless communications with only the receiver unit and is configured to not perform two-way wireless communications with any other devices; and

an output port configured to couple the receiver unit with the display device and to transmit the video content received from the transmitter unit to the display device.

15. The receiver unit of claim **14**, wherein the output port comprises a High-Definition Multimedia Interface (HDMI) output port.

16. The receiver unit of claim **14**, wherein the receiver unit comprises a router configured to interact with a software application executing on the computer system.

17. The receiver unit of claim **14**, wherein the computing device is configured to generate information to be displayed on the display device, and the receiver unit acts as a pass-through device that receives the information from the computing device and passes the information to the display device for display without performing any further processing on the information.

18. The receiver unit of claim **14**, further comprising a processing unit that is configured to generate information to be displayed on the display device by processing information received from the computing device.

19. The receiver unit of claim **18**, wherein processing the information received from the computing device comprises scaling video content received from the computing device from a first resolution to a second resolution, wherein the second resolution is greater than the first resolution.

20. The receiver unit of claim **14**, wherein the transceiver is further configured to receive commands from a remote control device.

* * * * *