(19) Japan Patent Office (JP)

(12) Public patent publication (A)

(11) Patent application publication number
Japanese Patent Application Laid-Open No. 2007-208606 (P2007-208606A)

(43) Publication date : **August 16, 2007 (2007.8.16)**

(51) Int.Cl.			F1			Theme codes (reference)
H04N	***7/15***	***(2006.01)***	H04N	7/15	63OA	5C164
G1OL	***19/00***	***(2006.01)***	G1OL	19/00	312F	

Number of unclaimed claims for review 6 OL (14 pages in total)

Japanese Patent Application No. 2006-
(21) Application number 24363 (P2006-24363)
(22) Date of application February 1, 2006 (2006.2.1)

(71) Applicant 000005821
Matsushita Electric Industry Co., Ltd.
1006, Oaza Kadoma, Kadoma-Shi, Osaka, Japan
(74) Agents 100097445
Patent attorney Fumio Iwahashi
(74) Agents 100109667
Patent attorney Hiroki Naito
(74) Agents 100109151
Attorney Daisuke Nagano
(72) Inventor Takeshi Maeda
Matsushita Electric Industrial Co., Ltd. 1006, Oaza Kadoma, Kadoma-Shi, Osaka, Japan
.
(72) Inventor Junji Masumoto
Matsushita Electric Industrial Co., Ltd. 1006, Oaza Kadoma, Kadoma-Shi, Osaka, Japan
.

Continued on last page

(54) [Title of invention] Audio-visual transmission system and audio-visual transmission method

(57) [Abstract]

[Problem to be solved] The objective of the present invention is to realize an image and audio transmission system that can automatically prevent audio interference even when displaying images from multiple PCs on a projector, and can easily switch between connections for one device and multiple devices.

[Means for solving the problems] The projector 200 determines whether it is in the exclusive mode, in which only one PC is connected, or in the shared mode, in which multiple PCs are connected, and informs the PC 100 whether it is in the exclusive mode or the shared mode (step S52).

Next, the PC 100 transmits the image in step S42. Next, based on the information transmitted from the projector 200, it is determined in step S43 whether the projector 200 is in the exclusive mode or the shared mode, and if it is in the exclusive mode, audio is transmitted to the projector 200 in step S44, and

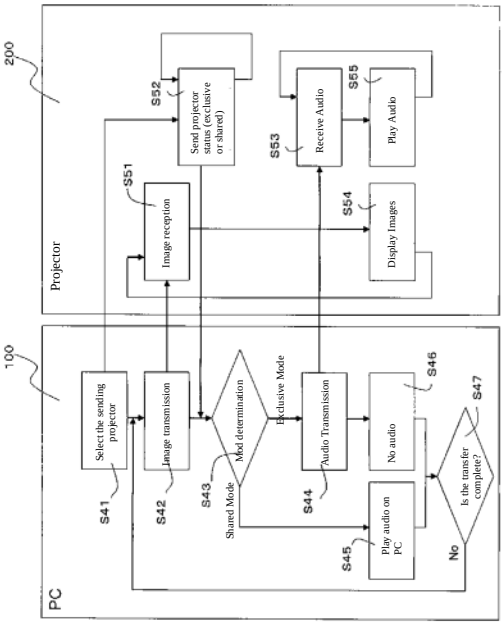

[Scope of Claims]
[Claim 1]
An image transmission system comprising an image generation device that generates an image and an image projection device that projects images transmitted from a plurality of said image generation devices, wherein said image generation device or said image projection device is equipped with an audio playback device, and the image and audio transmission system is characterized in that said image generation device or said image projection device is switched to or from playing audio depending on the projection status of said image projection device.
[Claim 2]
An image and audio transmission system according to claim 1, wherein the projection status is either an exclusive mode in which an image from one of the image generating devices is projected, or a shared mode in which images from a plurality of the image generating devices are projected simultaneously.
[Claim 3]
An image and audio transmission system according to claim 1 or claim 2, characterized in that when audio is played back by the image projection device, audio is not played back by the image generation device, and when audio is not played back by the image projection device, audio is played back by the image generation device.
[Claim 4]
An image and audio transmission method characterized in that the image projection device has the step of determining whether an image projection device is in an exclusive mode or a shared mode; and, if in the exclusive mode, an image generation device transmitting audio along with an image to the image projection device; and, if in the shared mode, the image generation device transmitting only an image to the image projection device.
[Claim 5]
The method for transmitting audio and video according to claim 4, characterized in that in the case of exclusive mode, it has the step of stopping playback of audio from the image generating device.
[Claim 6]
The method for transmitting image and audio according to claim 4 or claim 5, characterized in that in the case of a shared mode, it has the step of playing audio from the image generating device
[Detailed description of invention]
[Technical field]
[0001]
The present invention relates to a system and method for transmitting images and audio from an image generating device such as a personal computer (hereinafter referred to as “PC”) to an image projection device such as a projector.
[Background Technology]
[0002]
In recent years, projectors that receive image signals from a PC and project the screen of the PC onto a screen or the like have become increasingly popular. This projector is often used in meetings and training sessions because it can visually express what it wants to convey by projecting image data of presentation materials edited on a PC onto a screen. Furthermore, a system has been proposed that uses a large display such as a plasma display panel (PDP) instead of a projector as an image projection device.
[0003]
Typically, a PC and a projector exchange image signals through an analog connection via an RGB cable or a digital connection via a digital video interface (DVI). However, connecting a PC and a projector is a time-consuming process, and if the image data to be projected is stored on multiple PCs or if you want to switch the display across multiple projectors, you will have to reconnect the PC and projector each time.
[0004]
Therefore, in order to improve the usability of projectors, wireless image transmission systems have been proposed in which image signals are transmitted from a PC to a projector via a wireless LAN or the like.

[0005]

Also disclosed is a wireless transmission system that simultaneously displays image signals from a plurality of PCs on one projector (see, for example, Japanese Patent Application Laid-Open No. 2003-233663).

[0006]

An example of the configuration of the transmission system is shown in FIG. 12. In the transmission system of FIG. 12, 1001 and 1002 are PCs as image generation devices, 1003 is a projector as an image projection device, and 1004 is a screen for displaying the projected image. PCs 1001 and 1002 are each provided with wireless communication modules 1005 and 1006 equipped with wireless communication functions, and projector 1003 is provided with a wireless communication module 1009 and connected to an image receiving module 1007, so that the screens of PCs 1001 and 1002 are received in turn, and multiple images can be displayed on projector 1003.

[Patent Literature 1] Japanese Unexamined Patent Application Publication No. 2003-330436

[Disclosure of invention]

[Problems to be solved by the invention]

[0007]

Although it is not described in the above patent literature, etc., normally, PCs and projectors are each equipped with speakers, and it is possible to play audio that matches the image to be displayed.

[0008]

However, in the above conventional configuration, it is not assumed that audio will be played back on the projector, and it is not possible to easily switch between audio playback on a single projector and audio playback on a multiple projector connection.

[0009]

In other words, when multiple PCs are connected and the images received from them are switched so that only the image from one PC is displayed, the audio also needs to be switched. Furthermore, when images from multiple PCs are displayed simultaneously, audio from the multiple PCs will interfere with each other, so it is necessary to either prevent audio from being transmitted from all PCs or to select the PC that will play the audio.

[0010]

The present invention is intended to solve the above-mentioned conventional problems, and aims to realize an image and audio transmission system that can automatically prevent audio interference even when displaying images from multiple PCs on a projector, and can easily switch between one and multiple connections.

[Means for solving the problems]

[0011]

The invention according to claim 1 of the present invention is an image transmission system comprising an image generation device that generates an image and an image projection device that projects images transmitted from a plurality of said image generation devices, said image projection device being equipped with an audio playback device, and characterized in that said image projection device switches whether or not to play audio depending on the projection status of said image projection device, and even when a projector displays images from a plurality of PCs, audio interference can be automatically prevented, and the connection between one device and multiple devices can be easily switched.

[Effects of the Present Invention]

[0012]

As described above, according to the present invention, audio interference can be automatically prevented even when images from a plurality of PCs are displayed on a projector. Even in this case, the audio can be played back from each PC, so it is possible to check the audio.

[Detailed Description of the Preferred Embodiments]

[0013]

A preferred embodiment of the present invention will now be described with reference to FIGS. 1 to 11.

[0014]

(Embodiment 1)

First, a video and audio transmission system according to a first embodiment of the present invention will be described.

[0015]

In the present embodiment, an example is described in which a PC is used as an image generation device that generates images and audio, and the images and audio are transmitted to a projector, which is an image projection device, using a wireless LAN.

[0016]

FIG. 1 is a diagram illustrating the external configuration of an audio/video transmission system according to the first embodiment.

[0017]

This transmission system is a system in which a screen displayed on the display of PC 100 is transmitted from PC 100 to projector 200 and the screen received by projector 200 is projected onto a screen 30. A wireless LAN card 10 containing a wireless LAN chip is attached to PC 100, thereby transmitting image signals and audio signals to projector 200 via the wireless LAN. The PC 100 also has a built-in speaker 20 that can play audio generated by the PC 100. The projector 200 is also equipped with a speaker 300, which can play audio when an audio signal is received from the PC 100.

[0018]

FIG. 2 is a block diagram illustrating the hardware configuration of the PC 100 and the projector 200 that constitute the audio and video transmission system according to the first embodiment.

[0019]

As shown in FIG. 2, the PC 100 includes a CPU 101, a main memory 102, a storage device 103, a graphics chip 104, a VRAM 105, an audio chip 114, an output IF 106 that outputs to a display 110 and a speaker 113, a user IF 107 for acquiring instruction signals based on user operations from input devices such as a keyboard 111 and a mouse 112, and a network IF 108 which is an interface for communicating with projector 200 via a LAN or the like.

[0020]

The projector 200 includes a CPU 201, a main memory 202, a storage device 203, a graphics chip 204, a resizing LSI 205, a VRAM 206, a network IF 207, an image output device 208, an audio output device 209, and an audio chip 210.

[0021]

FIG. 3 is a block diagram illustrating the functional configuration of the PC 100 and the projector 200 that constitute the image transmission system according to the first embodiment.

[0022]

As shown in FIG. 3, the PC 100 includes a control unit 121, a screen generation unit 122, an image capture unit 123, an audio generation unit 124, an image output unit 125, an audio output unit 126, a PC communication unit 127, and an audio capture unit 128 as functional components.

[0023]

The control unit 121 is a processing unit that controls each part that makes up the PC, and is realized by the CPU 101 and the main memory 102. For example, the control unit 121 instructs the image output unit 125 to display an image, and instructs the image capture unit 123 to capture the screen.

[0024]

In addition, the control unit 121 also determines, based on the projector information obtained by the PC communication unit 127, whether to output audio data to the audio output unit 126, or whether to compress and transmit the audio data from the PC communication unit 127 to the projector 200.

[0025]

The screen generation unit 122 is a processing unit that generates a screen to be output to a display device such as the display 110, and is realized by the graphics chip 104, the VRAM 105, and the like.

[0026]

The image capture unit 123 is a processing unit that receives a capture instruction from the control unit 121 and captures the screen generated by the screen generation unit 122, and is realized by the graphics chip 104, the main memory 102, and the like.

[0027]

The audio generation unit 124 is a processing unit that generates audio to be output to an audio output device such as the speaker 113, and is realized by the audio chip 114, the main memory 102, and the like.

[0028]

The audio capture unit 128 is a processing unit that receives a capture instruction from the control unit 121 and captures the audio generated by the audio generation unit 124, and is realized by the audio chip 114, the main memory 102, and the like.

[0029]

Furthermore, the image captured by the image capture unit 123 and the sound captured by the sound capture unit 128 are transmitted to the projector 200 via the PC communication unit 127.

[0030]

The PC communication unit 127 is a processing unit that acquires image and audio transmission data from the image capture unit 123 and the audio capture unit 128, compresses and packets the data, and transmits it to the projector 200, and is realized by the CPU 101, the network IF 108, and the like.

[0031]

It should be noted that the control unit 121 determines whether or not to transmit the audio data depending on the state of the projector 200.

[0032]

The image output unit 125 is a processing unit that acquires the output screen generated by the screen generation unit 122 and outputs it to the display 110, and is realized by the output IF 106.

[0033]

The audio output unit 126 is a processing unit that outputs the output audio generated by the audio generation unit 124 and the audio captured by the audio capture unit 128 to the speaker 113, and is realized by the output IF 106.

[0034]

Although the audio output to the speaker 113 is the audio captured by the audio capture unit 128, the audio may be output directly from the audio generation unit 124.

[0035]

The projector communication unit 221 is a processing unit that receives a compressed and packetized transmission screen from the PC communication unit 127 and passes the data to an image decompression unit 223 and an audio decompression unit 225, and is realized by the CPU 201, the network IF 207, and the like.

[0036]

The image decompression unit 223 decompresses the image data passed from the projector communication unit 221. This is accomplished by the CPU 201 and the main memory 202.

[0037]

The audio decompression unit 225 decompresses the audio data passed from the projector communication unit 221. However, if there is no audio data, the data will not be expanded. This is accomplished by the CPU 201 and the main memory 202.

[0038]

The control unit 224 is a processing unit that controls each part that constitutes the projector 200, and is realized by the CPU 201 and the main memory 202. For example, the control unit 224 instructs the image decompression unit 223 to decompress, controls the display timing of the image output unit 222, and controls the timing of the audio output unit 226. The projector communication unit 221 also controls to notify the PC 100 of the current projector status. Therefore, the PC 100 determines whether or not to transmit audio.

[0039]

The image output unit 222 is a processing unit that acquires image data from the image decompression unit 223 and outputs the image data onto the screen 30, and is composed of a video output device 208, a resizing LSI 205, a VRAM 206, and the like. The audio output unit 226 is a processing unit that acquires audio data from the audio decompression unit 225 and outputs it to a speaker, and is composed of the audio output device 209, the audio chip 210, the main memory 202, and the like.

[0040]

Next, a processing procedure of the audio/video transmission system according to the first embodiment will be described.

[0041]

FIG. 4 is a flowchart illustrating the processing procedure of the PC 100 and the projector 200.

[0042]

First, from the PC 100 side, a projector to transmit data is selected in step S41. In this case, it is assumed that projector 200 is selected. When the projector 200 is selected as a transmitting projector, it determines whether the projector 200 is in an exclusive mode where only one PC is connected, or a shared mode where multiple PCs are connected, and the PC 100 is informed of whether the mode is the exclusive mode or the shared mode (step S52).

[0043]

FIG. 5 is a schematic diagram illustrating an example of the exclusive mode. The PC 100 has selected and connected to the projector 200, but the PCs 100b, 100c, and 100d have not selected and connected to the projector 200. Therefore, the projector 200 is operating in the exclusive mode.

[0044]

Next, in step S42, the PC 100 captures an image and transmits the image. This is done regardless of whether the mode is exclusive or shared. Next, based on the information transmitted from the projector 200, in step S43, it is determined whether the projector 200 is in the exclusive mode or the shared mode, and if it is in the exclusive mode, audio is transmitted to the projector 200 in step S44, and audio is prevented from being output from the PC 100 in step S46.

[0045]

If the projector 200 is in the shared mode, the audio is not transmitted and the audio is played back on the PC 100 in step S45. If the transmission is not to be ended after this series of steps, the process returns to step S42. When the transmission to projector 200 is to be ended, the process returns to the selection of the transmitting projector (step S47).

[0046]

FIG. 6 is a schematic diagram illustrating an example of the shared mode. Each of PC 100, PC 100b, PC 100c, and PC 100d selects projector 200 and transmits an image. Therefore, the audio is not transmitted from each PC to the projector 200, but is played back on each PC.

[0047]

Next, the operation of the projector 200 will be described. In step S52, the status of the connected projector is constantly monitored, and the information is transmitted to the PC 100. The method of monitoring and information exchange between the PC and the projector will be described later. In the case of the exclusive mode, the image received from the PC 100 in step S51 is displayed in accordance with the size of the projection range of the projector (step S54). In addition, when audio is received in step S53, the audio is played back (step S55).

[0048]

For example, in the case of a shared mode for four PCs as shown in FIG. 6, the projection range of the projector is divided into four and image playback is performed in step S54.

[0049]

In this case, the image may be reduced in size in accordance with the resolution on the PC side, or on the projector side.

[0050]

FIG. 7 is a sequence diagram illustrating an example of a method of monitoring and transferring information when a plurality of PCs and projectors are connected. Here, an example in which two PCs and a projector are connected will be described. In step S81, the PC 100 notifies the projector 200 that it has been selected. Upon receiving the notification, projector 200 counts up the number of connected units from 0 to 1 (step S91). When only one device is connected, the exclusive mode is set and the connected PC 100 is notified of this.

[0051]

Next, when the PC 100b also selects the projector 200, it notifies the projector 200 of the selection (step S82). Upon receiving the notification, projector 200 counts the number of units from 1 to 2 (step S92), and if two units are connected, notifies each of connected PC 100 and PC 100b that the shared mode has been entered.

[0052]

Note that, although an example has been shown here in which projector 200 switches between exclusive mode and shared mode depending on the number of connected PCs, the projector 200 may also be forcibly switched between exclusive mode and shared mode by operating the projector.

[0053]

An example of this is shown in steps S93 and S94. In step S93, the projector 200 is operated to switch to the exclusive mode of the PC 100b. The projector 200 is in the exclusive state of the PC 100, and the PC 100 receives a notification from the projector 200 that it will stop sending images and audio. When the exclusive mode is released, the projector 200 notifies the PC 100 and the PC 100b that the mode has been returned to the shared mode, and the PC 100 and the PC 100b recognize that they have entered the shared mode again.

[0054]

Alternatively, the exclusive mode may be forcibly selected from the PC. An example of this is shown in steps S83 and S84. It is assumed that the exclusive mode is selected on the PC 100 in step S83. When this notification is sent to the projector 200, the projector 200 recognizes the mode as the exclusive mode and requests the PC 100b to stop image transmission. Upon receiving this notification, the PC 100b stops image transmission. When PC 100 releases the exclusive mode as in step S84, it notifies projector 200 of this information, and projector 200 notifies PC 100 and PC 100b that it has entered the shared mode, and image transmission is performed again from PC 100 and PC 100b.

[0055]

By exchanging such information between the PC and the projector, the state of the projector can be communicated to the PC, and switching between the exclusive mode and the shared mode can be performed.

[0056]

Alternatively, the PC may be switched to the exclusive mode and the projector may be switched to the shared mode, and the present invention is not limited to these.

[0057]

In the present embodiment, an example in which audio transmission is performed after image transmission has been shown, but image transmission and audio transmission can also be performed in parallel. Also, images can be transmitted using TCP (Transmission Control Protocol), while audio can be transmitted using UDP (User Datagram Protocol). In this case, even if the buffer constituted by the main memory 202 for audio transmission is small, audio is less likely to be interrupted. Generally, audio has a smaller capacity than images and can therefore be transmitted faster. The delay between the video and audio can be adjusted by adjusting the size of the audio buffer.

[0058]

Further, although an example in which data is transmitted from four PCs in the shared mode has been shown here, it goes without saying that the present invention is not limited to this.

[0059]

(Embodiment 2)

Next, a video/audio transmission system according to a second embodiment will be described.

[0060]

In the present embodiment, an example will be described in which a PC to be exclusive is selected from a projector.

[0061]

FIG. 8 is a schematic diagram illustrating the external configuration of an audio/video transmission system according to the second embodiment. In FIG. 8, the same components as those in the first embodiment are given the same reference numbers and their explanations are omitted. In the figure, a PC 100, a PC 100b, a PC 100c, and a PC 100d are each connected to a projector 200. Therefore, the projector 200 is operating in the shared mode, and audio is output from each PC. The images from each PC are reduced and projected onto a screen 30 by a projector. The screen of PC 100 corresponds to 50, the screen of PC 100b corresponds to 50b, the screen of PC 100c corresponds to 50c, and the screen of PC 100d corresponds to 50d.

[0062]

A frame 60 on the screen 30 is a frame projected by the projector 200 and can be moved by the remote controller 40.

[0063]

Next, to switch from the shared mode to the exclusive mode, the frame 60 on the screen 30 is moved with the remote controller 40 to match the reduced projected image, one PC corresponding to the image is selected, and the decision button on the remote controller 40 is pressed to switch to the exclusive mode of the selected PC.

[0064]

FIG. 9 is a block diagram illustrating a state in which the PC 100b has been switched to the exclusive mode.

[0065]

In this case, the audio of the PC 100b is switched to be transmitted to the projector 200 together with the image, and the audio transmitted from the projector 200 is output. At the same time, the audio of the PC 100b itself stops. The other PCs 100, 100c, and 100d also stop transmitting images, and audio continues to be output from each PC.

[0066]

It should be noted that a configuration may be adopted in which when one PC enters the exclusive mode, the output of sounds from other PCs also stops.

[0067]

FIG. 10 is a flowchart of an image transmission system according to the second embodiment of the present invention.

[0068]

First, the flow of processing on the PC 100 will be explained. In step S61, a transmitting projector is selected. In step S62, it is determined based on information from projector 200 whether the mode is shared mode, exclusive mode, or whether another PC is in exclusive mode. In the case of the shared mode, only the image is transmitted in step S64, and the audio is played on the PC in step S66. In this case, the image can be reduced in size in advance by the PC 100, thereby reducing the amount of communication traffic.

[0069]

When the PC 100 is selected as the exclusive mode by the projector 200, the image and the audio are transmitted in step S65. The PC 100 does not play any audio (step S67). If it is determined in step S62 that the other projector is in the exclusive mode, neither the image nor the audio is transmitted (step S63), and the audio is played on the PC in step S66.

[0070]

In the projector 200, the above-mentioned remote control 40 is used to select the occupied PC..

[0071]

During the shared mode, the shared mode is notified to all PCs, and when an exclusive PC is selected, the exclusive mode is notified to the selected PC, and the other PCs are notified that another PC is using the exclusive mode (step S71).

[0072]

In the case of the shared mode, in step S72, the image is received and displayed with the size and position adjusted so that the screen can be shared.

[0073]

In the case of the exclusive mode, an image and audio are received in step S73, and the image is displayed and the audio is played back in step S74.

[0074]

In this way, when one device is in an exclusive mode where the screen is occupied by one projector, the audio can be automatically played back from the projector, allowing a presentation or the like to be performed. Furthermore, there is no confusion due to the same sound being emitted by the PC and the projector, and there is no possibility that sounds from multiple PCs will interfere with each other at the projector.

[0075]

As shown in FIG. 11, if a screen that is particularly desired to be emphasized is made larger than the others, while transmitting images other than those of PC 100b, PC 100b can be recognized as being in an exclusive mode and its audio can be played by projector 200; this is not limited to occupying the entire screen.

[0076]

In addition, although the example of using a wireless LAN has been shown as a method of connecting the PC and the projector, the method is not limited to these and may also be a wired LAN, USB, or IEEE1394.

[0077]

Further, although an example has been shown here in which a PC is used as the image generation device and a projector is used as the image projection device, the image generation device may also be an information processing terminal such as a PDA or a mobile phone, and the image projection device may also be a PDP or a liquid crystal display, and is not limited to these.

[Industrial Availability]

[0078]

The image and audio transmission system of the present invention can be applied to a system that transmits images and audio from an image generation device such as a PC to an image projection device such as a projector, and is particularly suitable for presentations using a wireless projector.

[Brief Description of Drawings]

[0079]

[FIG. 1] A diagram showing the external configuration of an image transmission system according to the first embodiment of the present invention.

[FIG. 2] A block diagram showing the hardware configuration of a PC and a projector that constitute the image transmission system according to the first embodiment.

[FIG. 3] A block diagram showing the functional configuration of a PC and a projector that constitute the image transmission system according to the first embodiment.

[FIG. 4] A flowchart showing the operation of the image transmission system according to the first embodiment.

[FIG. 5] A diagram showing an exclusive mode of the image transmission system according to the first embodiment.

[FIG. 6] A diagram showing a shared mode of the image transmission system according to the first embodiment.

[FIG. 7] A sequence diagram showing the operation of the image transmission system according to the first embodiment.

[FIG. 8] A diagram showing a shared mode of the image transmission system according to the second embodiment.

[FIG. 9] A diagram showing an exclusive mode of the image transmission system according to the second embodiment.

[FIG. 10] A flowchart showing the operation of the image transmission system according to the second embodiment.

[FIG. 11] A diagram showing variations in exclusive modes of the image transmission system according to the second embodiment.

[FIG. 12] A diagram showing the external configuration for explaining a conventional image transmission system.

[Reference Signs List]

[0080]

10 Wireless LAN card

20 Speaker 300
30 Screen
40 Remote controller
100, 100b, 100c, 100d PC

200 Projector
101, 201 CPU
102, 202 Main memory
103, 203 Storage devices
104, 204 Graphics chips
105, 206 VRAM
106 Output IF
107 User IF
108, 207 Network IF
110 Displays
111 Keyboard
112 Mouse
113 Speaker
114, 210 Audio chips
205 Resizing LSI
208 Video output device
209 Audio output device

[FIG. 1]

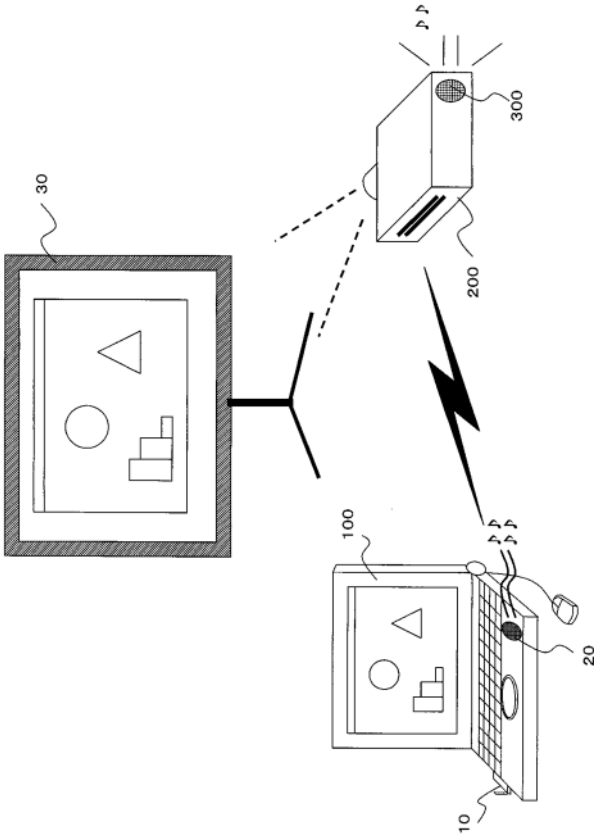

[FIG. 2]

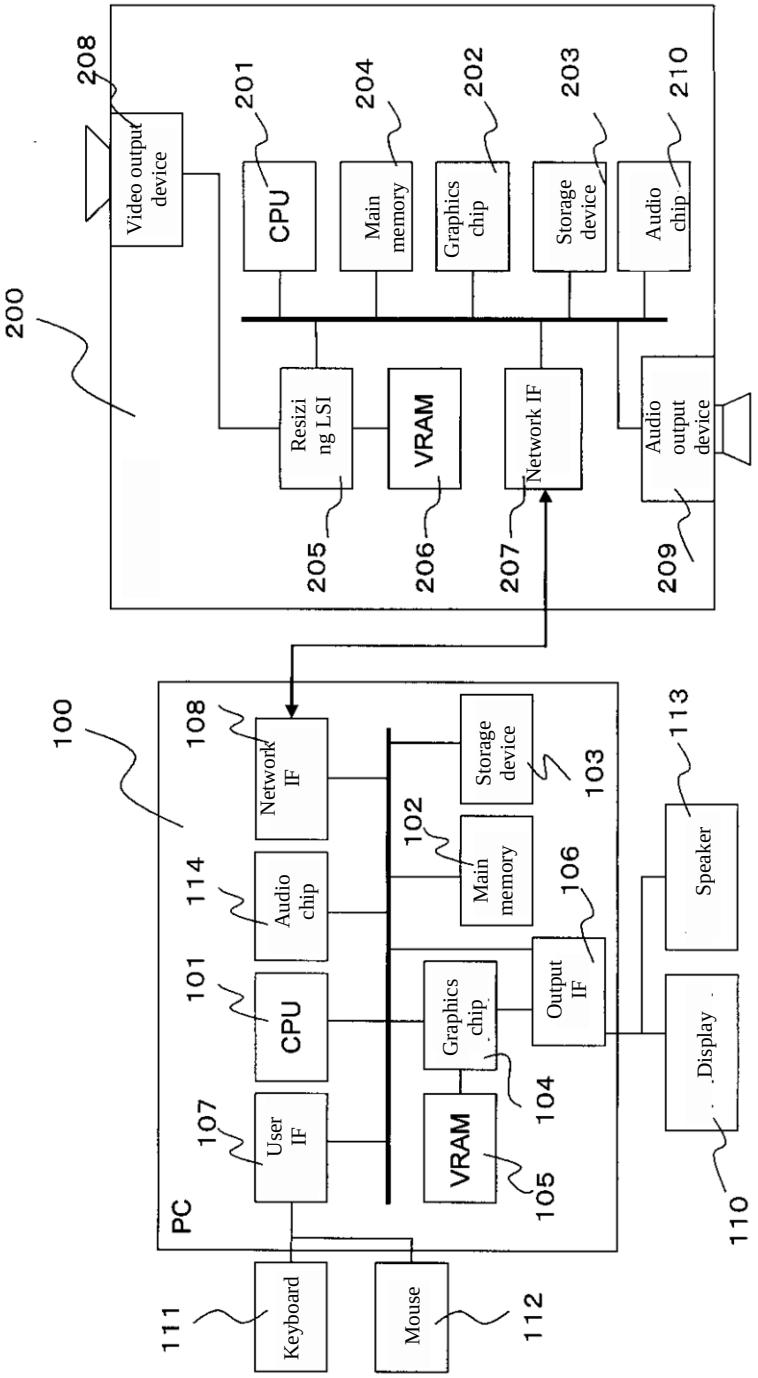
200
208
Video output device
201
CPU
204
Main memory
202
Graphics chip
203
Storage device
210
Audio chip
Resizing LSI
205
VRAM
206
Network IF
207
Audio output device
209
100
PC
108
Network IF
114
Audio chip
101
CPU
107
User IF
102
Main memory
Storage device
103
Graphics chip
104
VRAM
105
Output IF
106
113
Speaker
Display
110
111
Keyboard
Mouse
112

[FIG. 3]

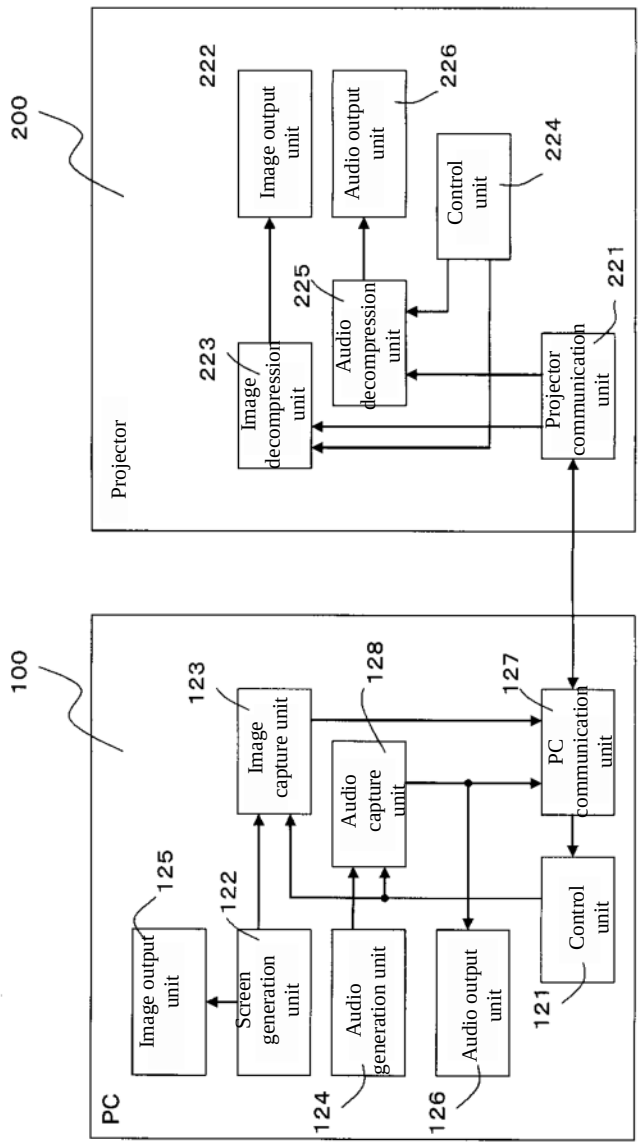
200
Projector
222
Image output unit
226
Audio output unit
224
Control unit
225
Audio decompression unit
221
Projector communication unit
223
Image decompression unit
100
PC
123
Image capture unit
128
Audio capture unit
127
PC communication unit
125
Image output unit
122
Screen generation unit
Audio generation unit
Audio output unit
Control unit
121
124
126

[FIG. 4]

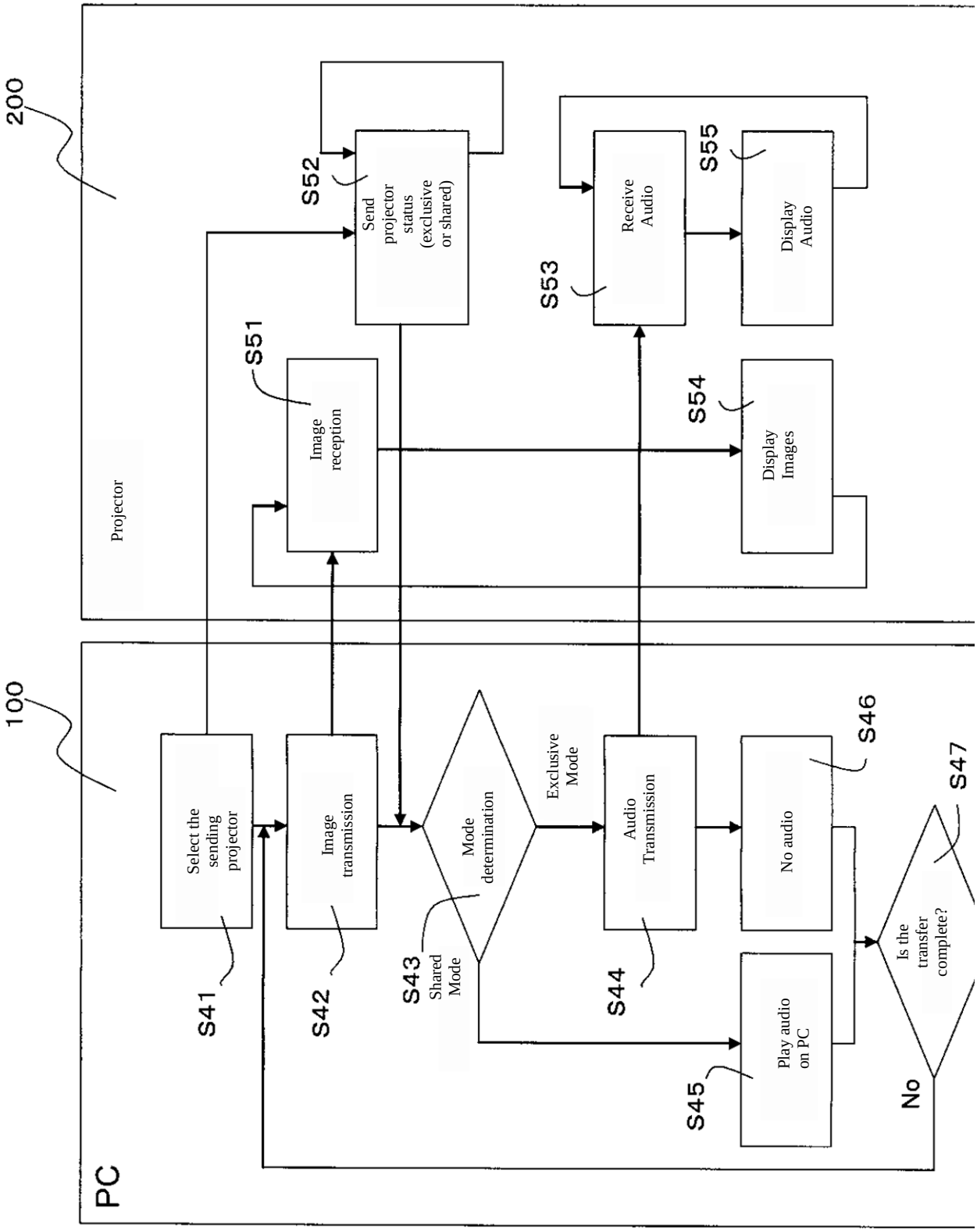
200
Projector
S51
Image reception
S52
Send projector status (exclusive or shared)
S53
Receive Audio
S54
Display Images
S55
Display Audio
100
PC
S41
Select the sending projector
S42
Image transmission
S43
Mode determination
Shared Mode
Exclusive Mode
S44
Audio Transmission
S45
Play audio on PC
S46
No audio
S47
Is the transfer complete?
No

[FIG. 6]

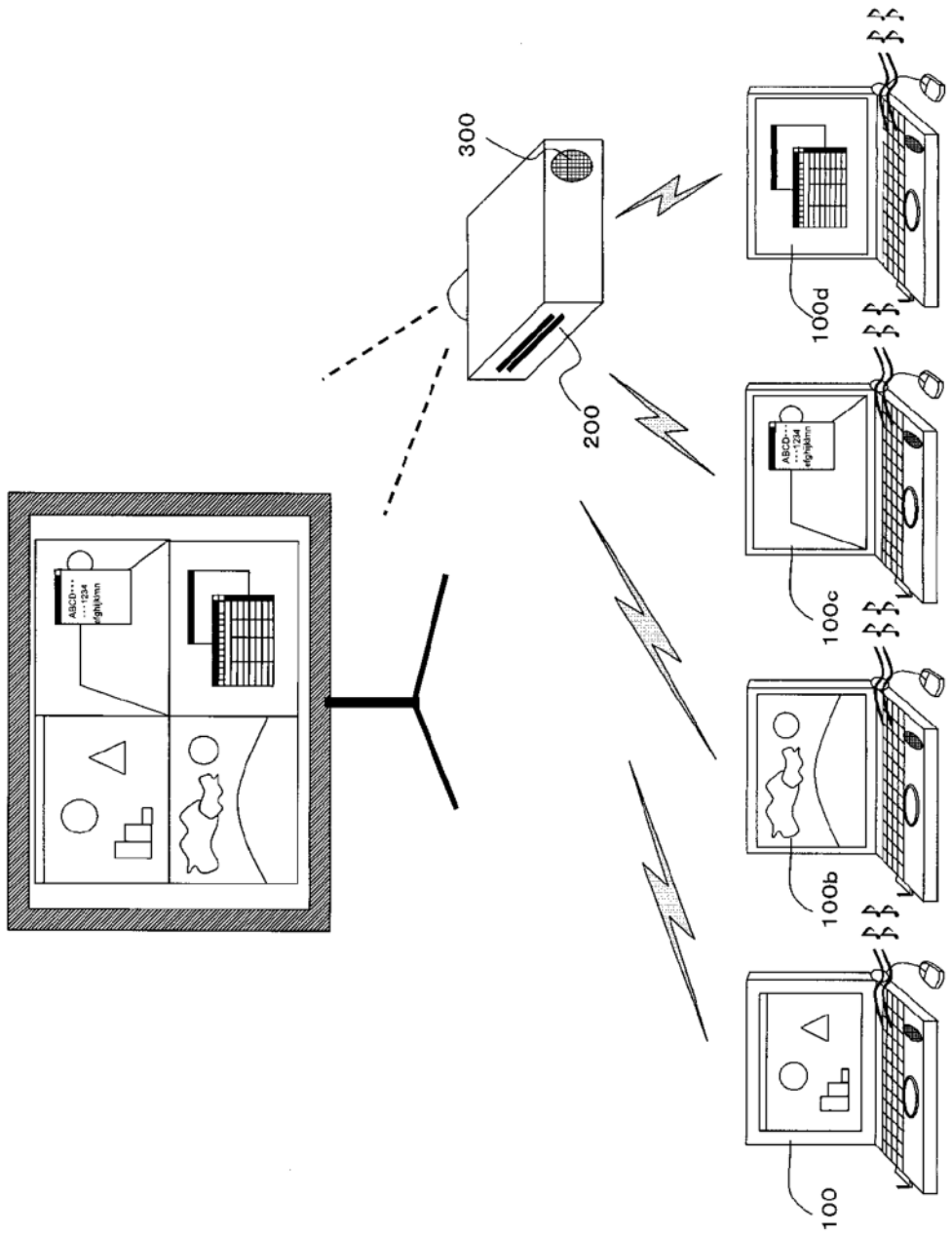

[FIG. 8]

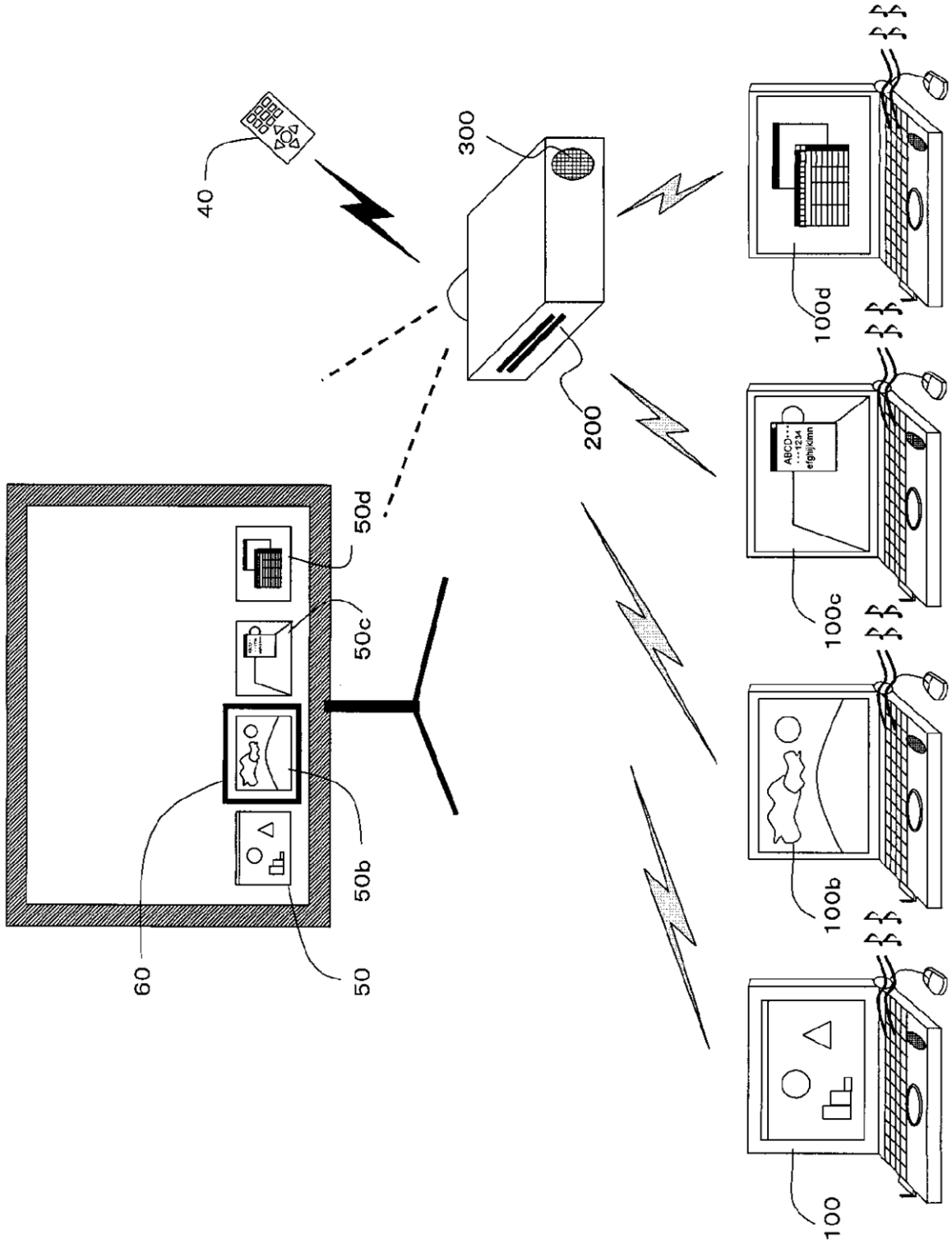
40
300
200
50d
50c
50b
50
60
100d
100c
100b
100
ABCD
1234
efghijklmn

[FIG. 10]

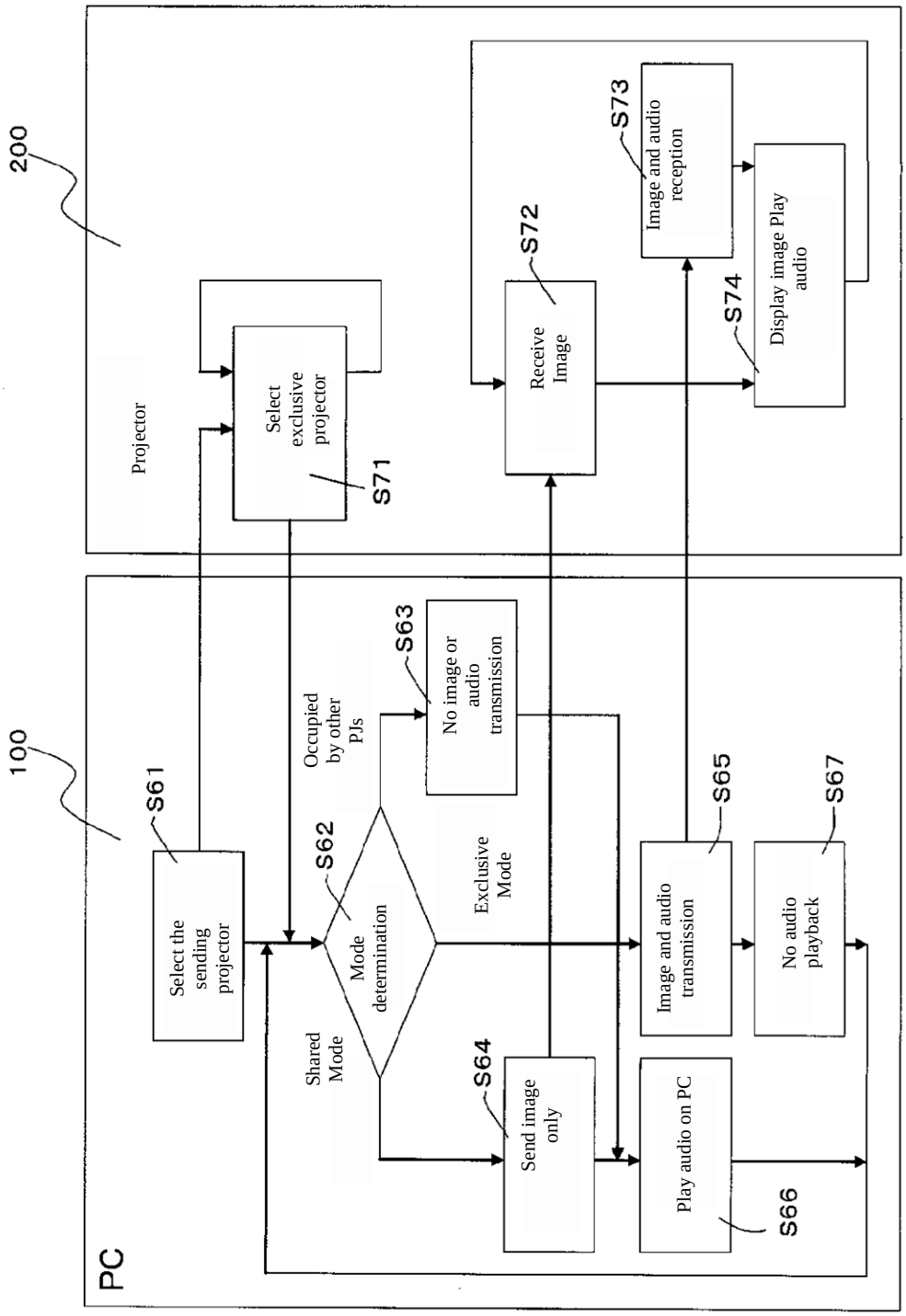
200
Projector
Select exclusive projector
S71
Receive Image
S72
Image and audio reception
S73
Display image Play audio
S74
100
PC
Select the sending projector
S61
Mode determination
S62
Occupied by other PJs
No image or audio transmission
S63
Exclusive Mode
Shared Mode
Send image only
S64
Image and audio transmission
S65
Play audio on PC
S66
No audio playback
S67

[FIG. 12]

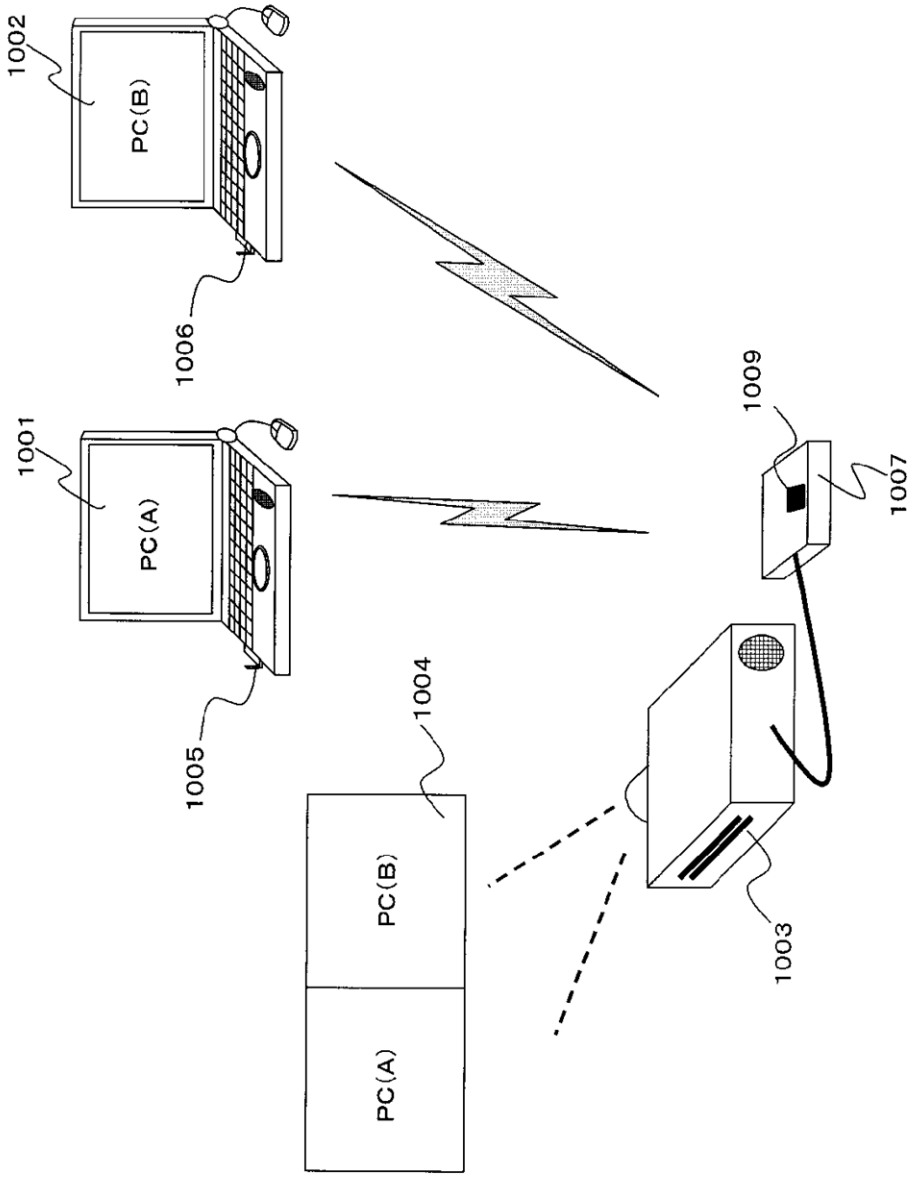

[FIG. 5]

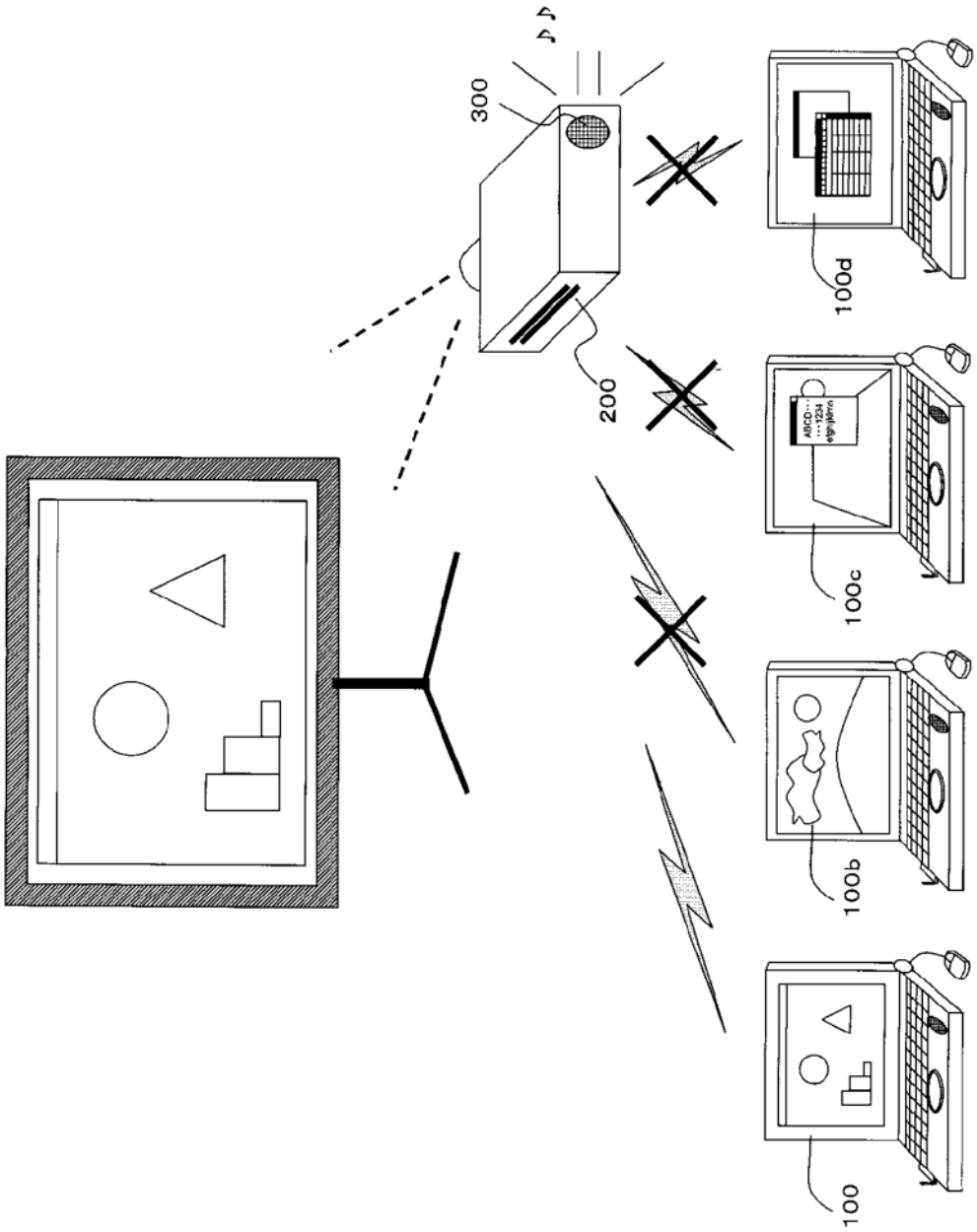

[FIG. 7]

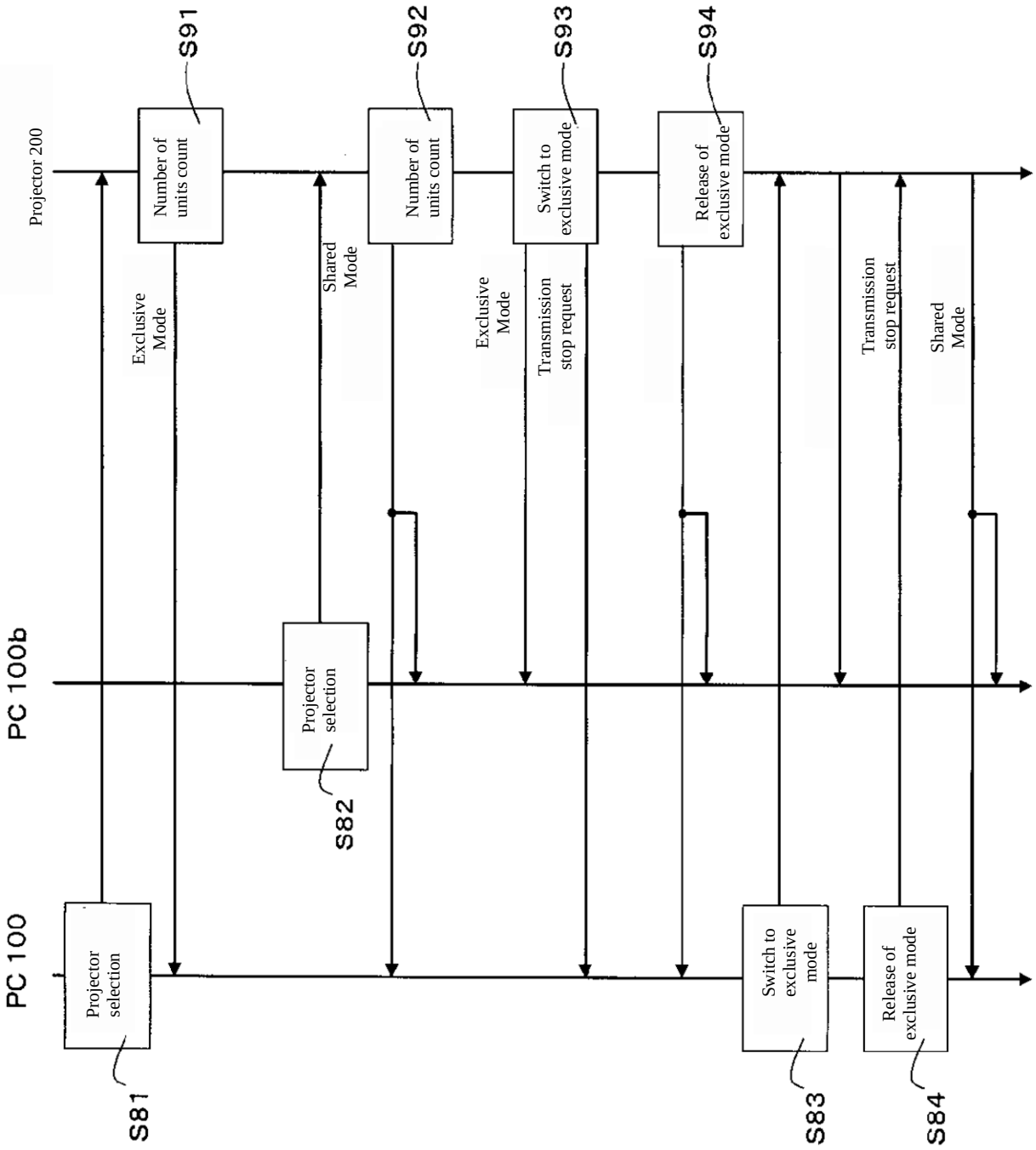
Projector 200
PC 100b
PC 100
Number of units count
S91
Number of units count
S92
Switch to exclusive mode
S93
Release of exclusive mode
S94
Exclusive Mode
Shared Mode
Exclusive Mode
Transmission stop request
Transmission stop request
Shared Mode
Projector selection
S82
Projector selection
S81
Switch to exclusive mode
S83
Release of exclusive mode
S84

[FIG. 9]

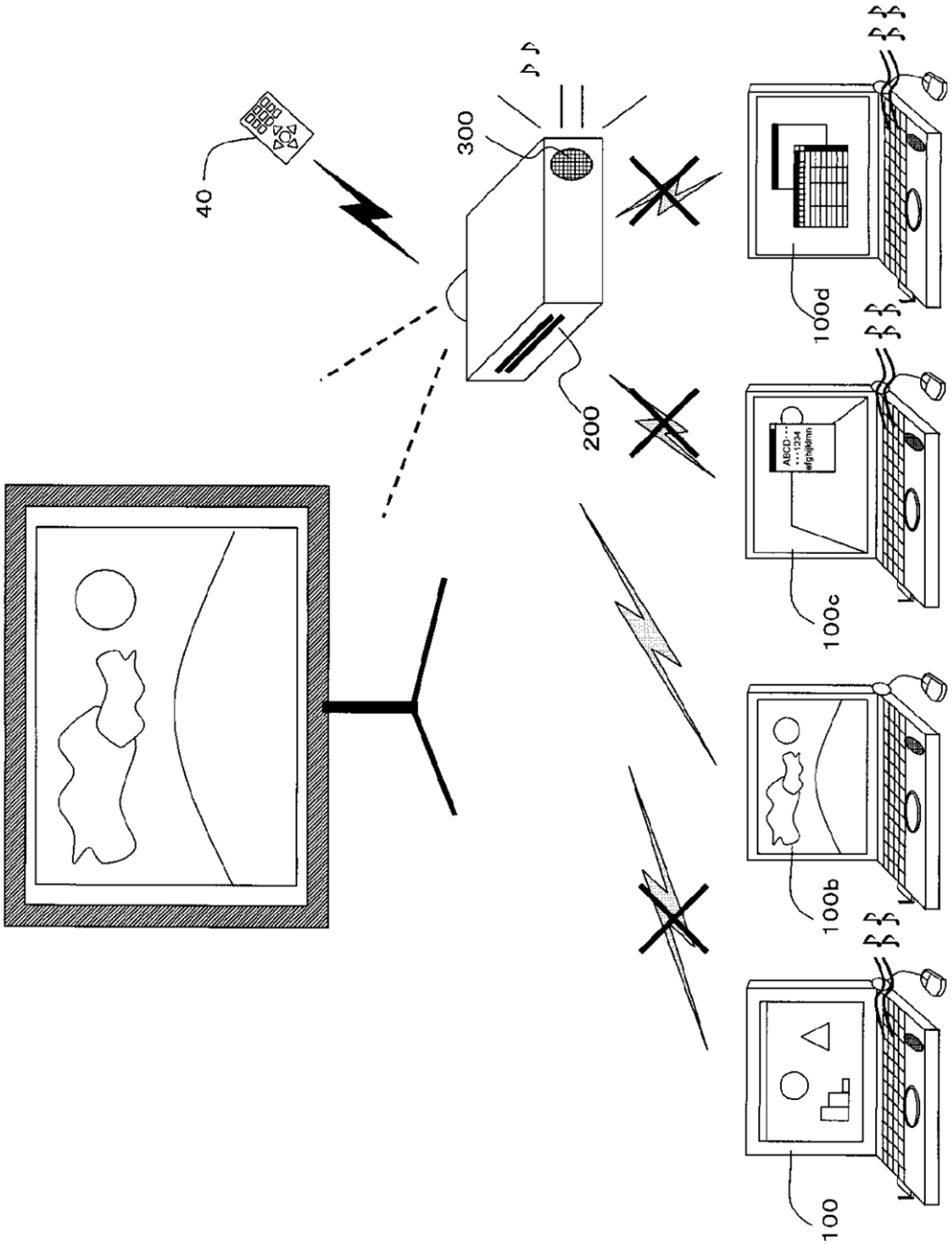

[FIG. 11]

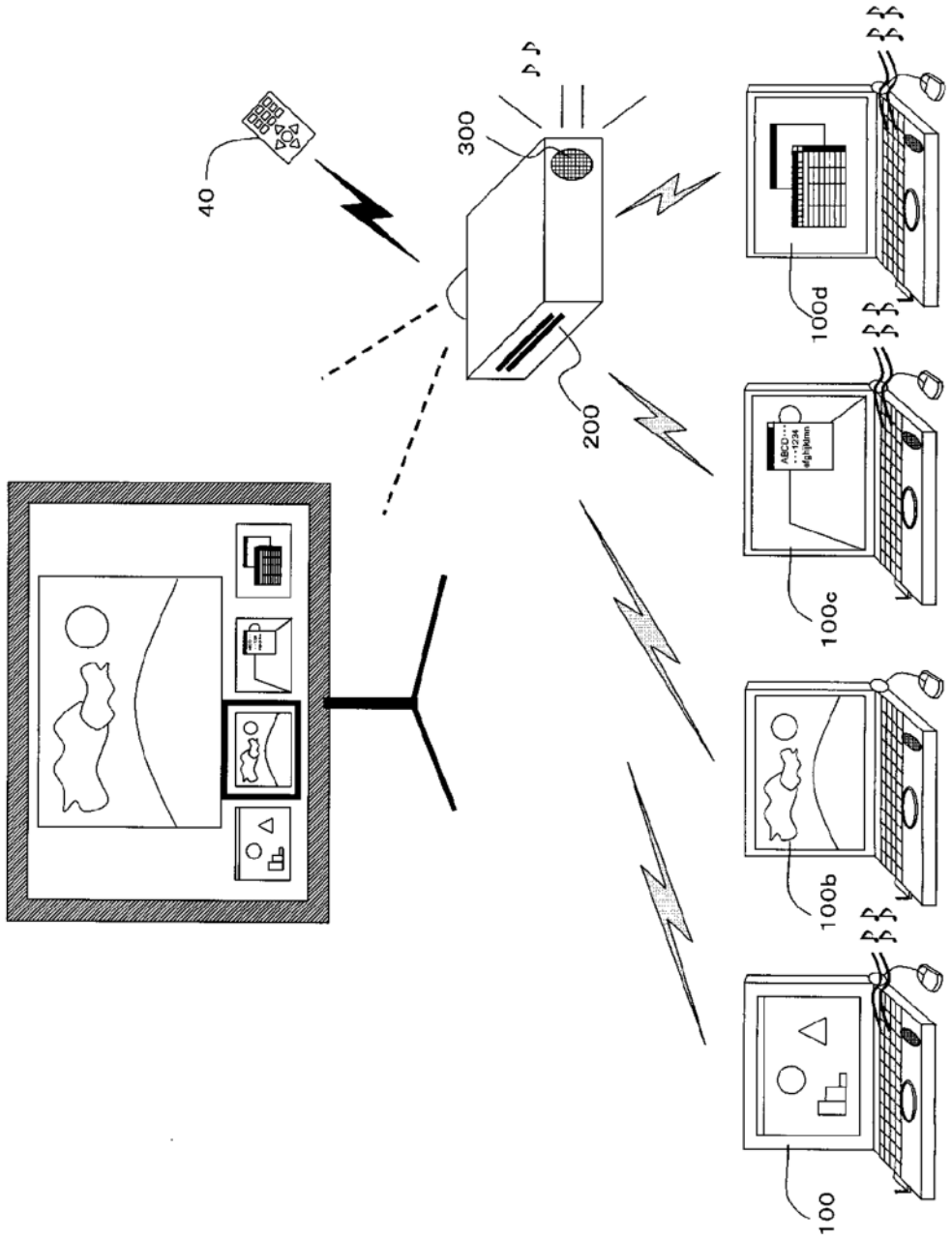

Continued from the front page

(72) Inventor Takashi Watanabe
Matsushita Electric Industry Co., Ltd., 1006, Oaza Kadoma, Kadoma-Shi, Osaka, Japan
F term (reference) 5C164 FA10 PA41 UA02P UA31P UB08P UB94P VA09P YA15