US 20020174254A1

(19) United States

(12) Patent Application Publication (10) Pub. No.: US 2002/0174254 A1

Kita et al. (43) Pub. Date: Nov. 21, 2002

(54) CARD TYPE NETWORK INTERFACE, NETWORK CONFERENCE TERMINAL DEVICE AND NETWORK CONFERENCE SYSTEM

(75) Inventors: **Kazuhiro Kita**, Kanagawa (JP); **Miwako Yuasa**, Kanagawa (JP)

Correspondence Address:
Doyle B. Johnson
Crosby, Heafey, Roach & May
Suite 2000
2 Embarcadero Center
San Francisco, CA 94111 (US)

(73) Assignee: **Sony Corporation**

(21) Appl. No.: **10/050,328**

(22) Filed: **Jan. 15, 2002**

(30) **Foreign Application Priority Data**

May 16, 2001 (JP) PCT/JP01/04082

Publication Classification

(51) **Int. Cl.**[7] **G06F 15/16**

(52) **U.S. Cl.** **709/250**; 709/204

(57) **ABSTRACT**

A wireless LAN conference system can be constructed without increasing the cost of equipment of a conference hall and without imposing a burden upon participants to execute a network setting. There are provided network conference terminal devices **11(2)** to **11(*n*)** in which network interface cards **1** are attached to information terminal devices. The network interface card **1** includes a connecting means for connecting the information terminal device to a wireless LAN, a determining means for determining whether the information terminal device is served as a host or a client of the wireless LAN, a setting means for requesting the host to transmit setting information necessary for executing the network setting to connect the information terminal device to the wireless LAN based on the fact that the information terminal device is determined as the client and executing the network setting by using the setting information transmitted from the host and a processing means for transmitting a requested setting information to the client based on the fact that the information terminal device is determined as the host and transmitting presentation data to the client in which the network setting was completed.

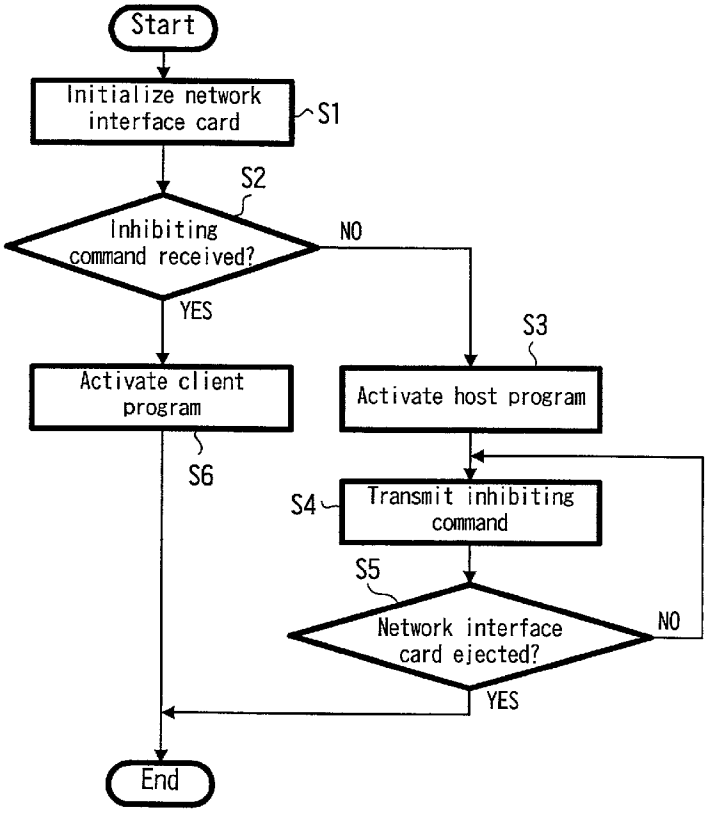

YEALINK EX. 1034

FIG. 1

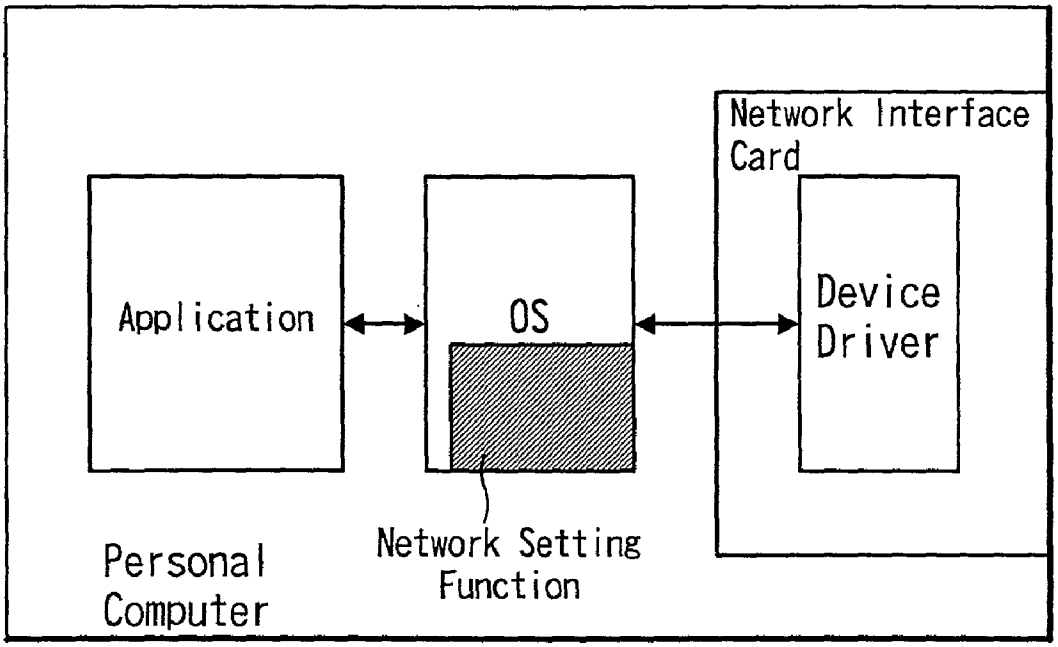
Network Interface Card
Application
OS
Device Driver
Network Setting Function
Personal Computer

FIG. 2

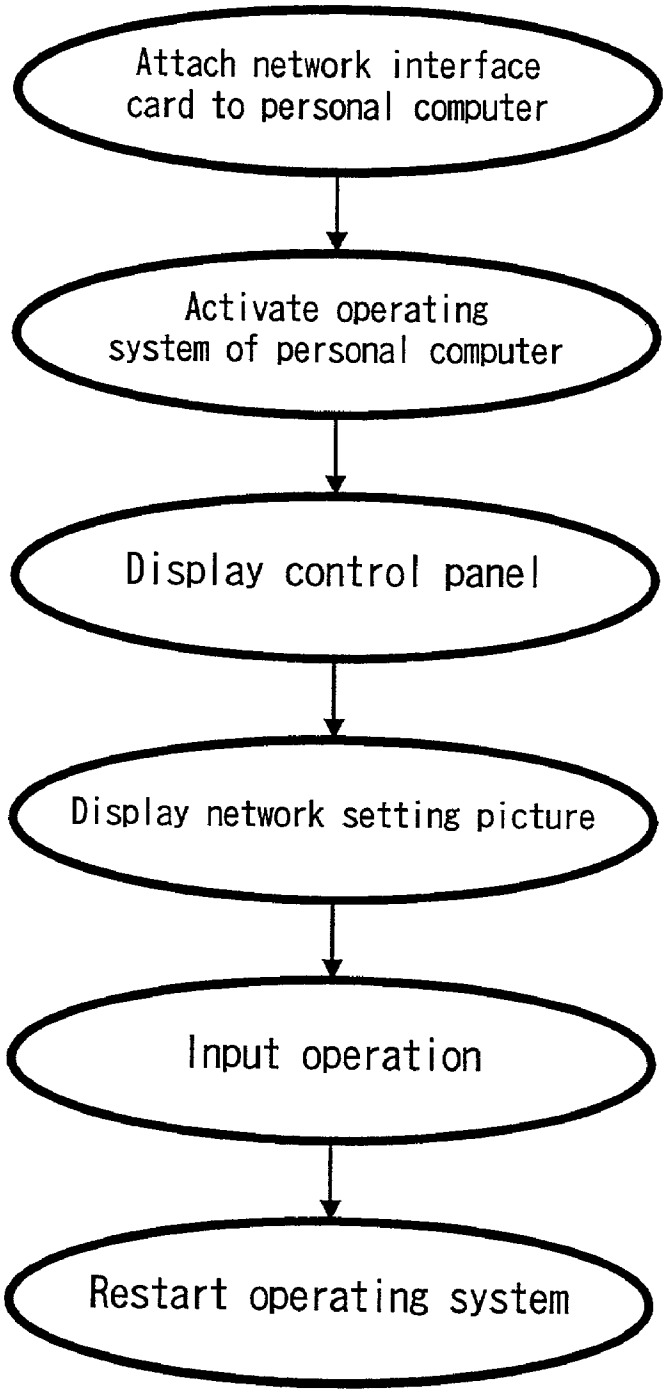
Attach network interface card to personal computer
Activate operating system of personal computer
Display control panel
Display network setting picture
Input operation
Restart operating system

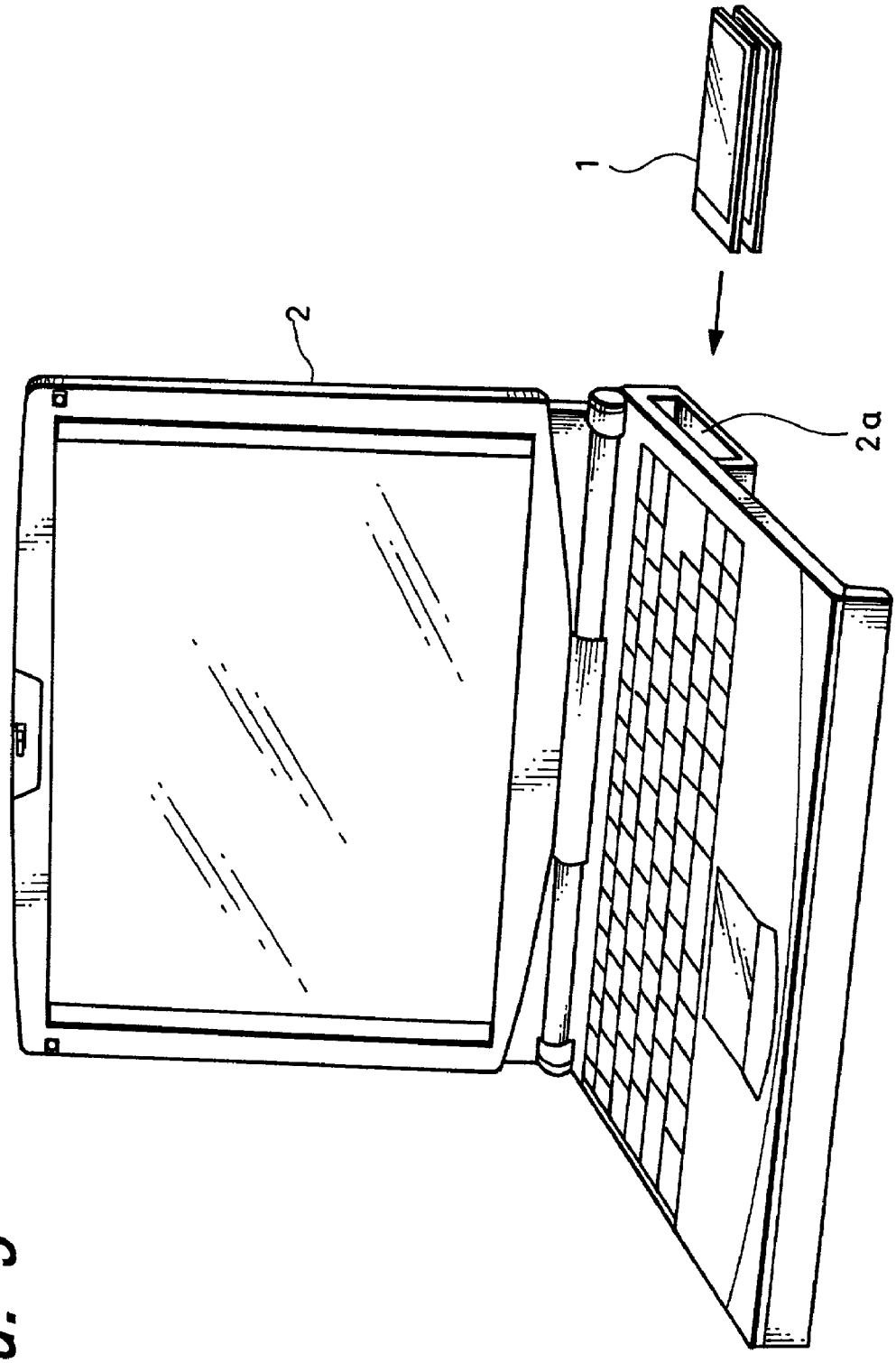

FIG. 3

FIG. 4

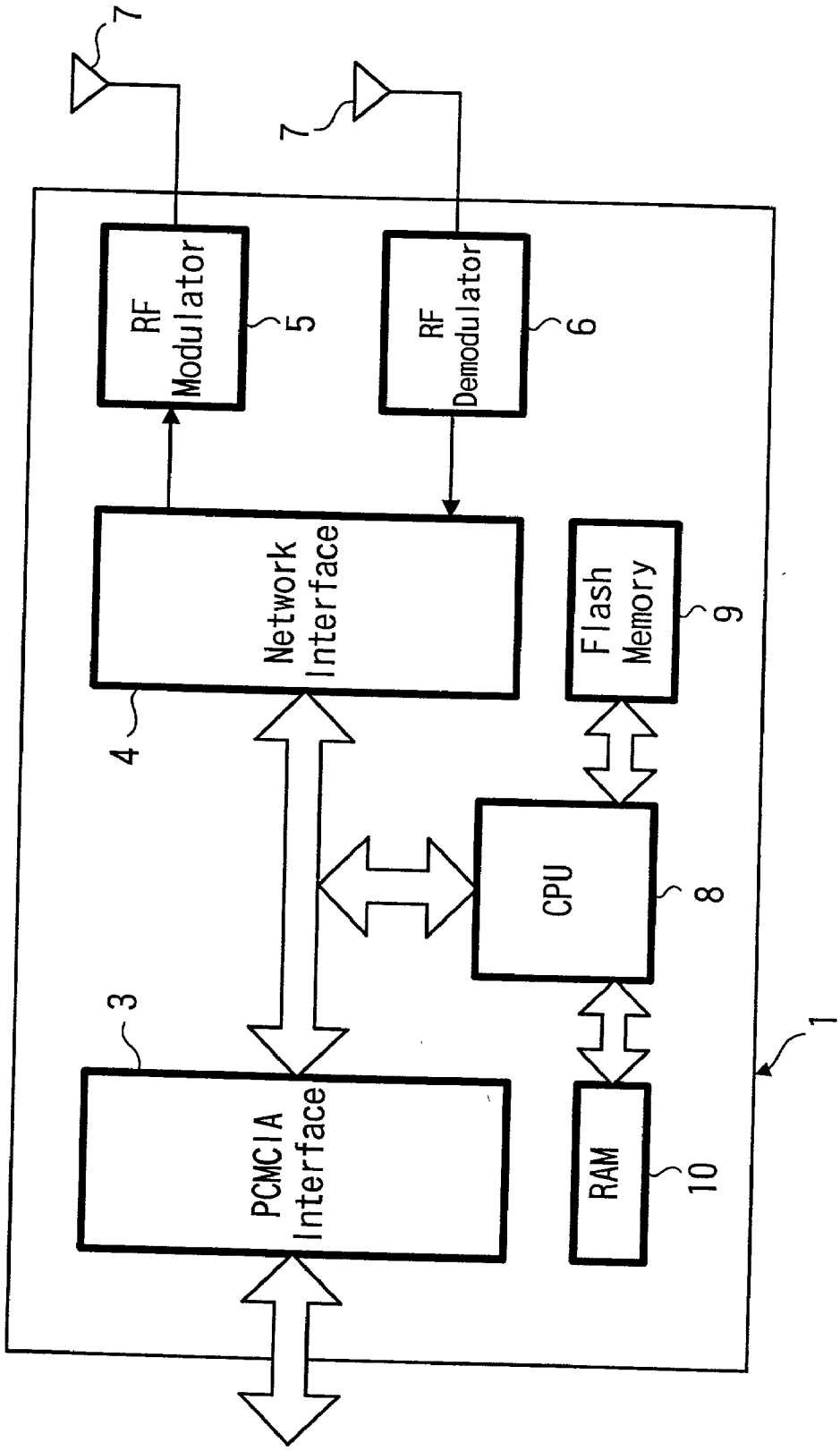
7
7
RF Modulator
5
RF Demodulator
6
Network Interface
4
Flash Memory
9
CPU
8
3
PCMCIA Interface
RAM
10
1

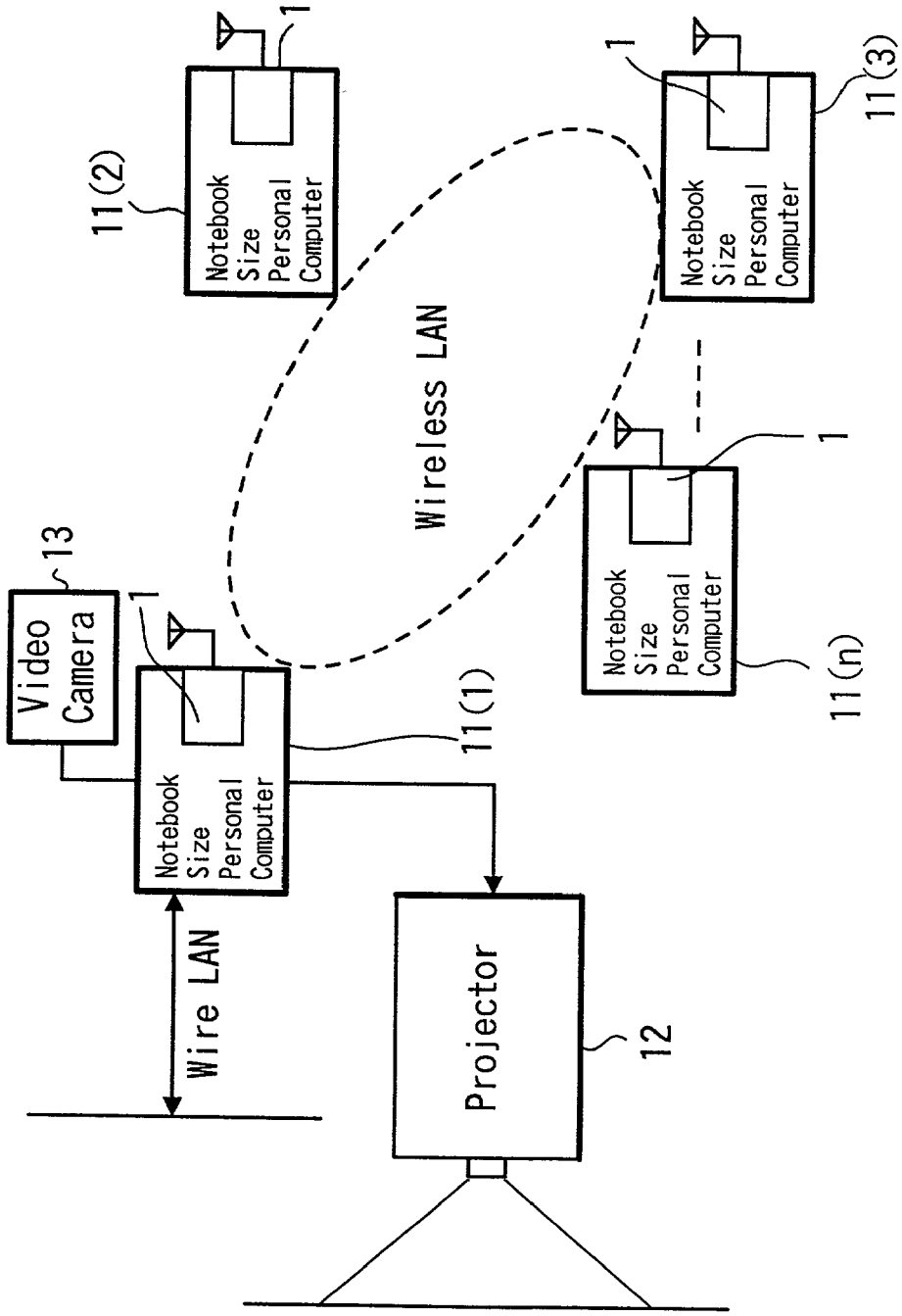
Video Camera
13
1
Notebook Size Personal Computer
11(1)
Wire LAN
Projector
12
Wireless LAN
Notebook Size Personal Computer
11(2)
Notebook Size Personal Computer
11(3)
Notebook Size Personal Computer
11(n)

FIG. 5

FIG. 6

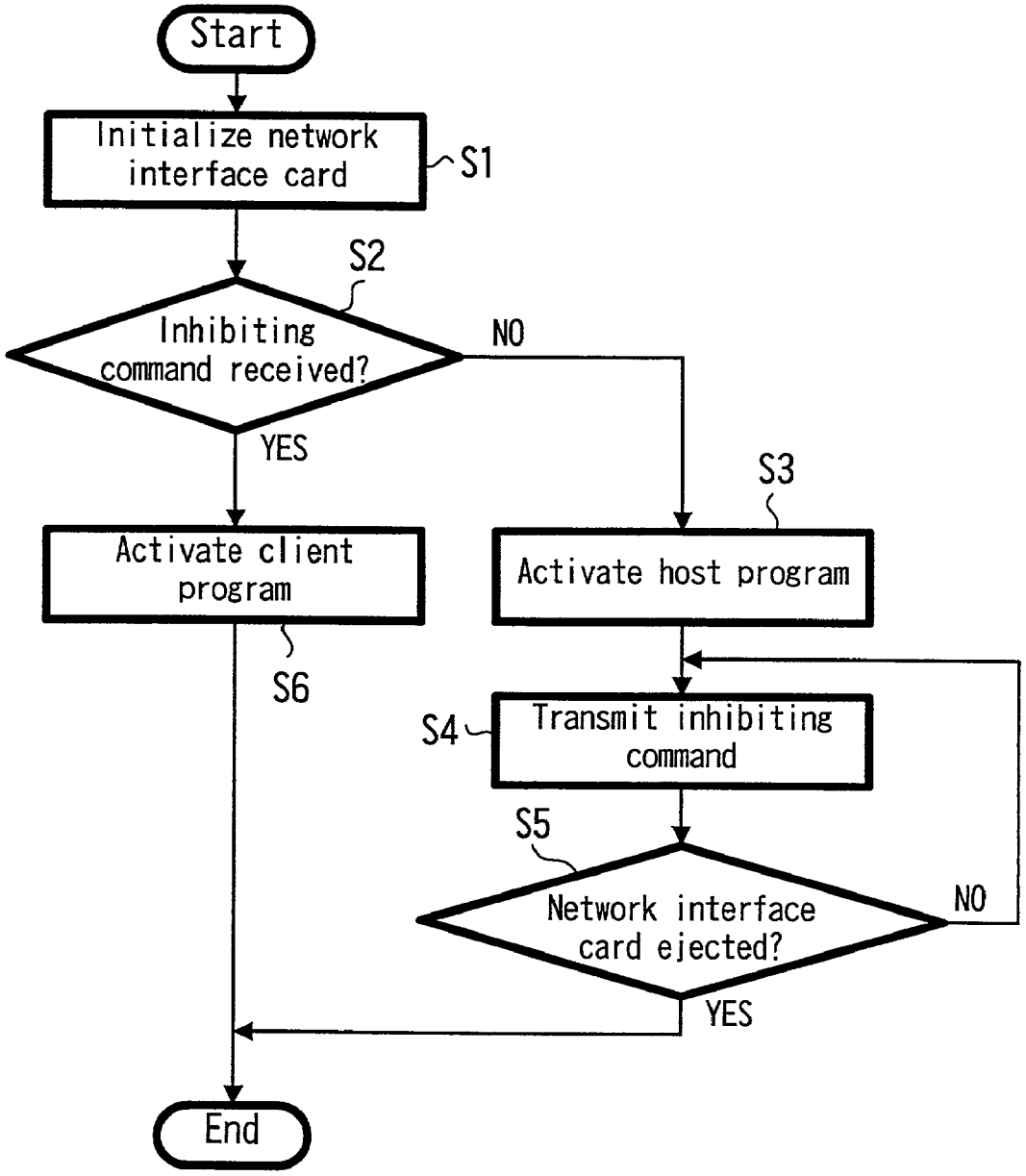
Start
Initialize network interface card
S1
S2
Inhibiting command received?
NO
YES
S3
Activate client program
Activate host program
S6
S4
Transmit inhibiting command
S5
Network interface card ejected?
NO
YES
End

FIG. 7

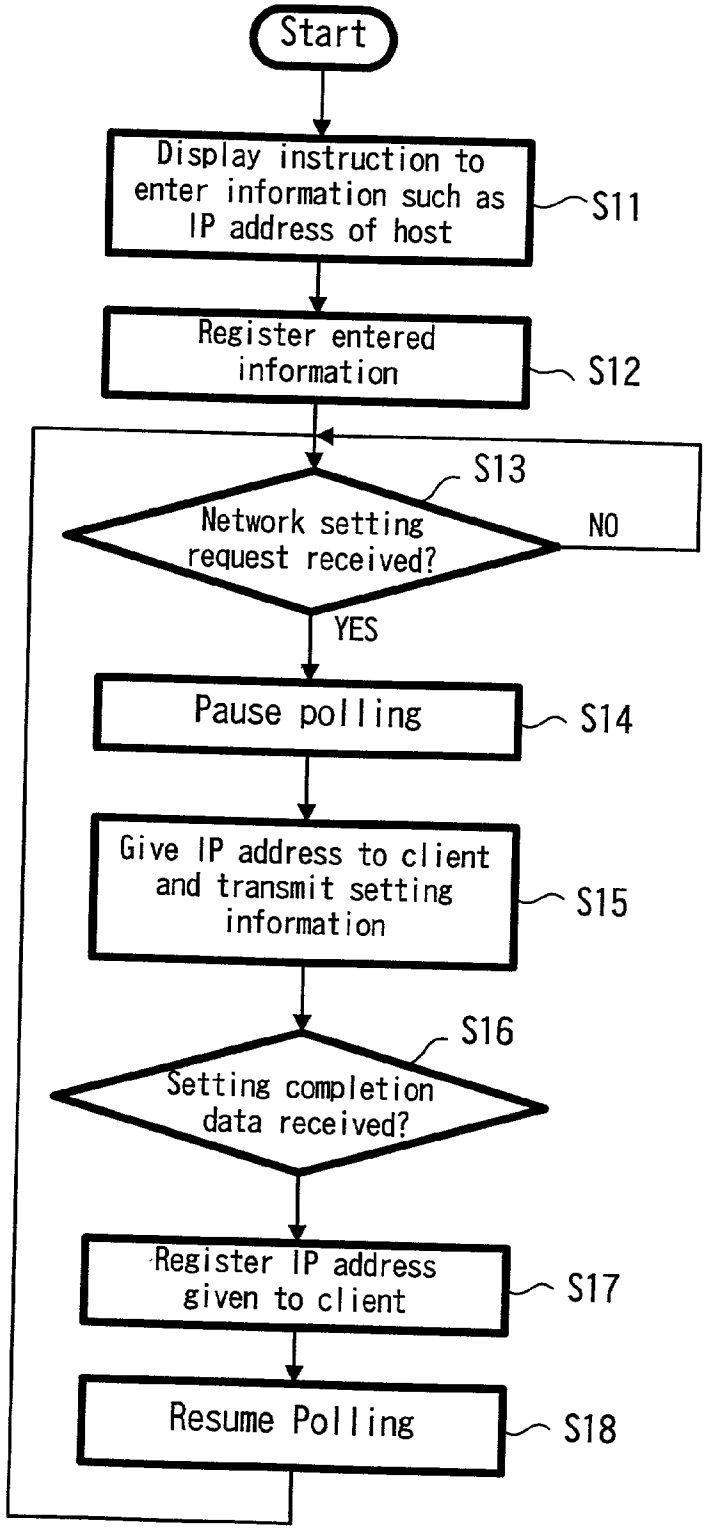
Start
Display instruction to enter information such as IP address of host
S11
Register entered information
S12
S13
Network setting request received?
NO
YES
Pause polling
S14
Give IP address to client and transmit setting information
S15
S16
Setting completion data received?
Register IP address given to client
S17
Resume Polling
S18

FIG. 8

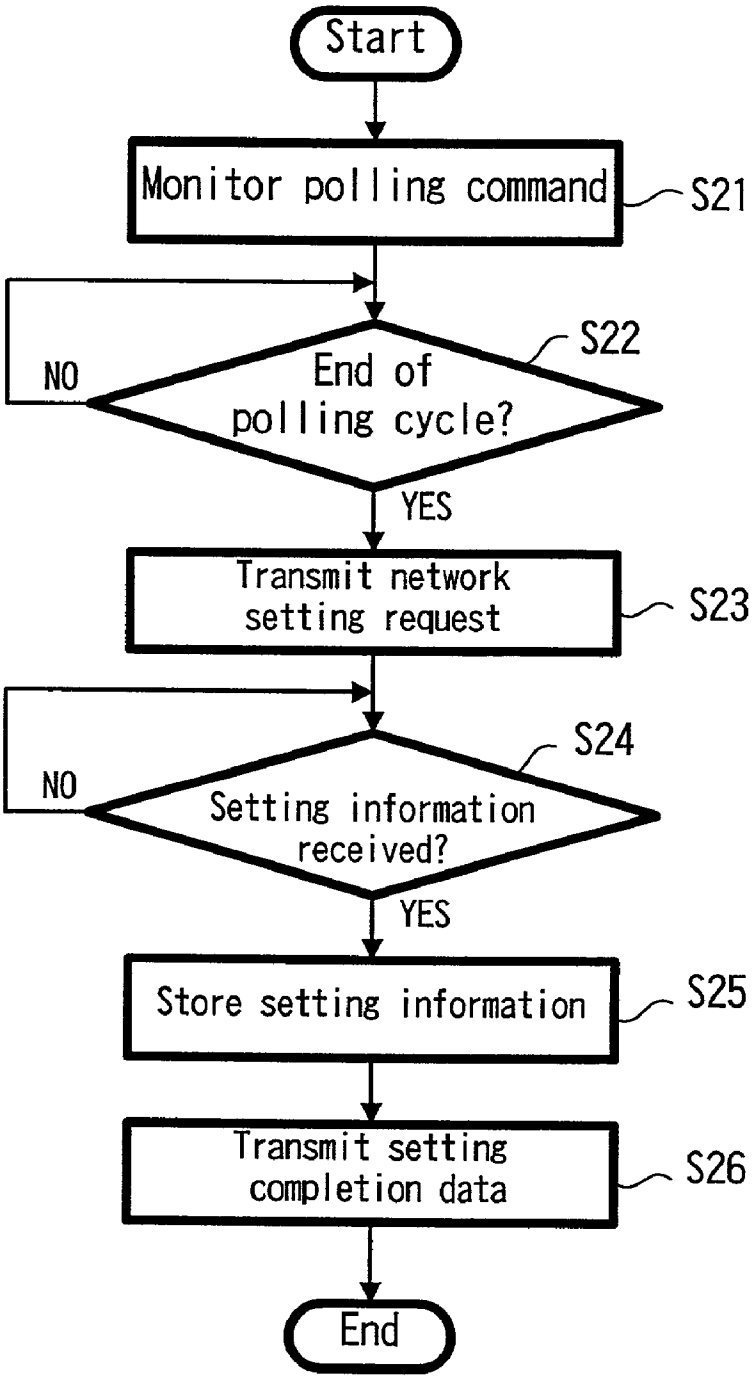
Start
Monitor polling command
S21
End of polling cycle?
S22
NO
YES
Transmit network setting request
S23
Setting information received?
S24
NO
YES
Store setting information
S25
Transmit setting completion data
S26
End

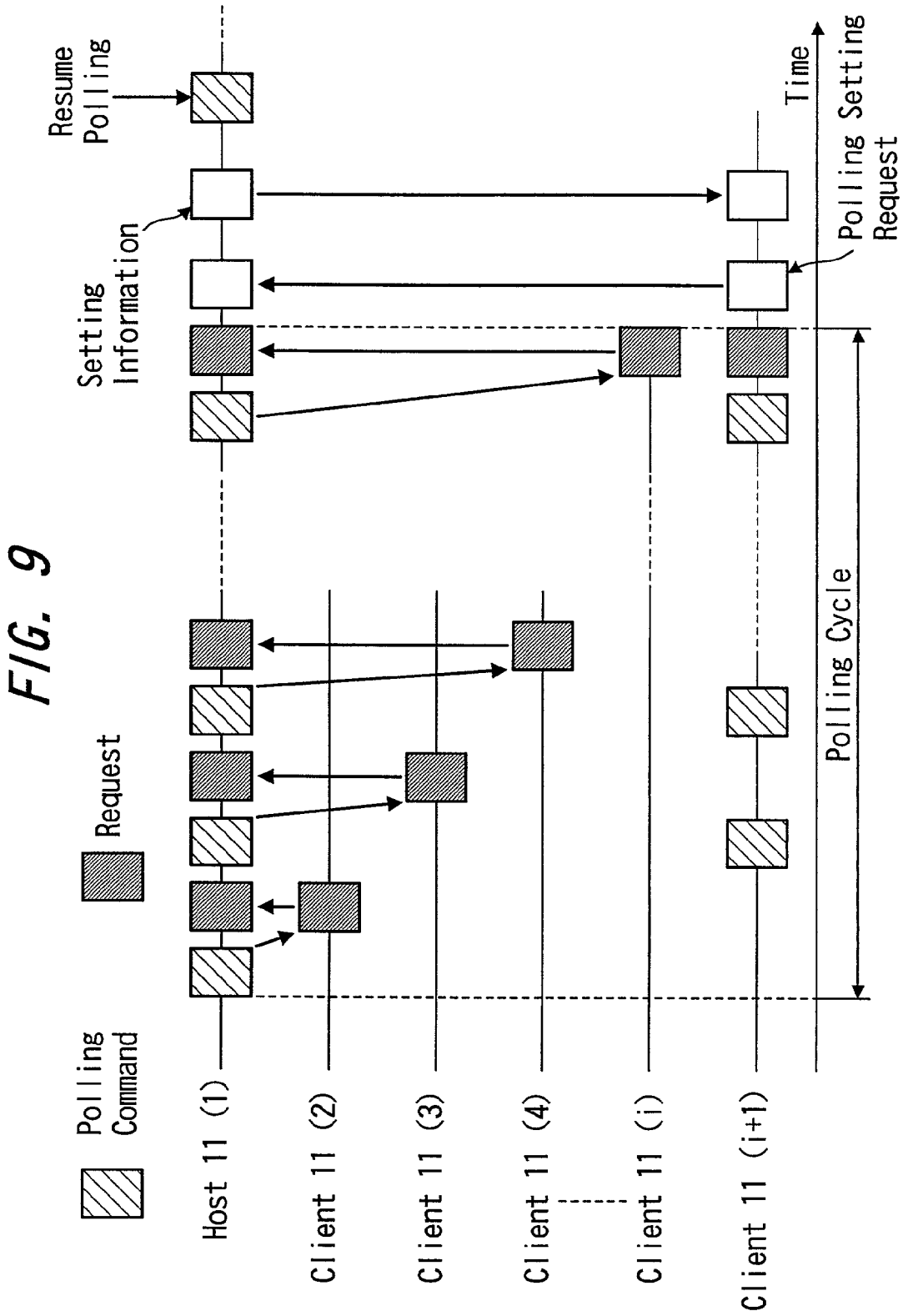
Polling Command
Request
Resume Polling
Setting Information
Polling Setting Request
Time
Host 11 (1)
Client 11 (2)
Client 11 (3)
Client 11 (4)
Client 11 (i)
Client 11 (i+1)
Polling Cycle

FIG. 9

FIG. 10A

Address of Transmission Destination	Address of Transmission Source	Following Bytes	Data or Command	Checksum

FIG. 10B

Poling end
Request IP Address
Complete set IP Address

FIG. 11

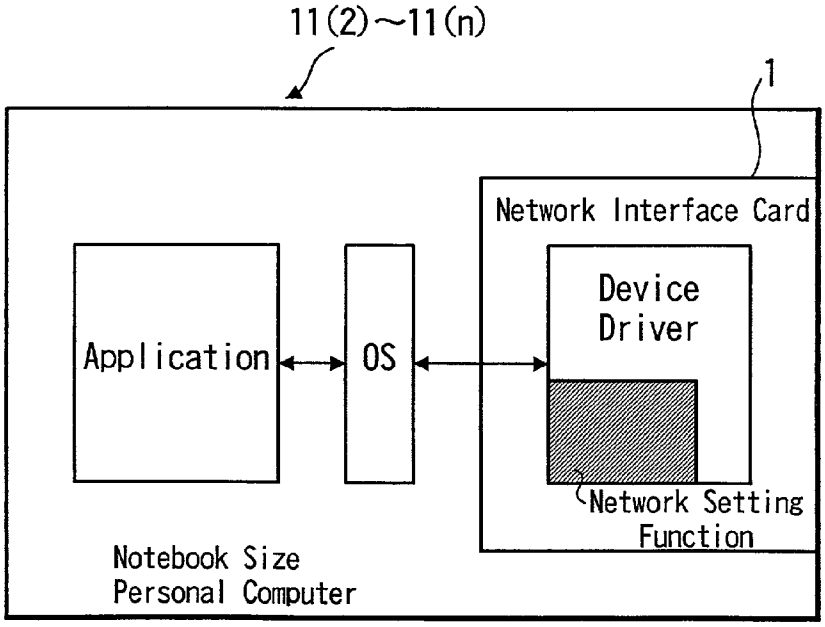

FIG. 12

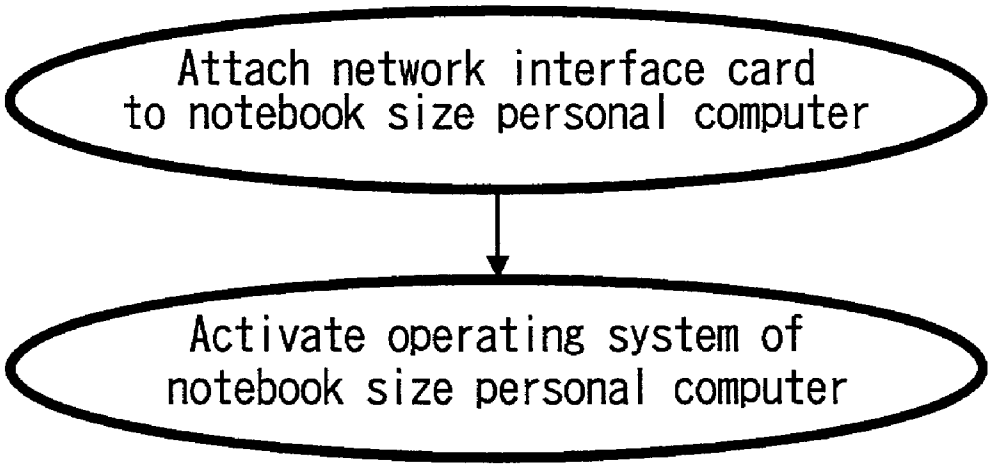
Attach network interface card to notebook size personal computer
Activate operating system of notebook size personal computer

FIG. 13

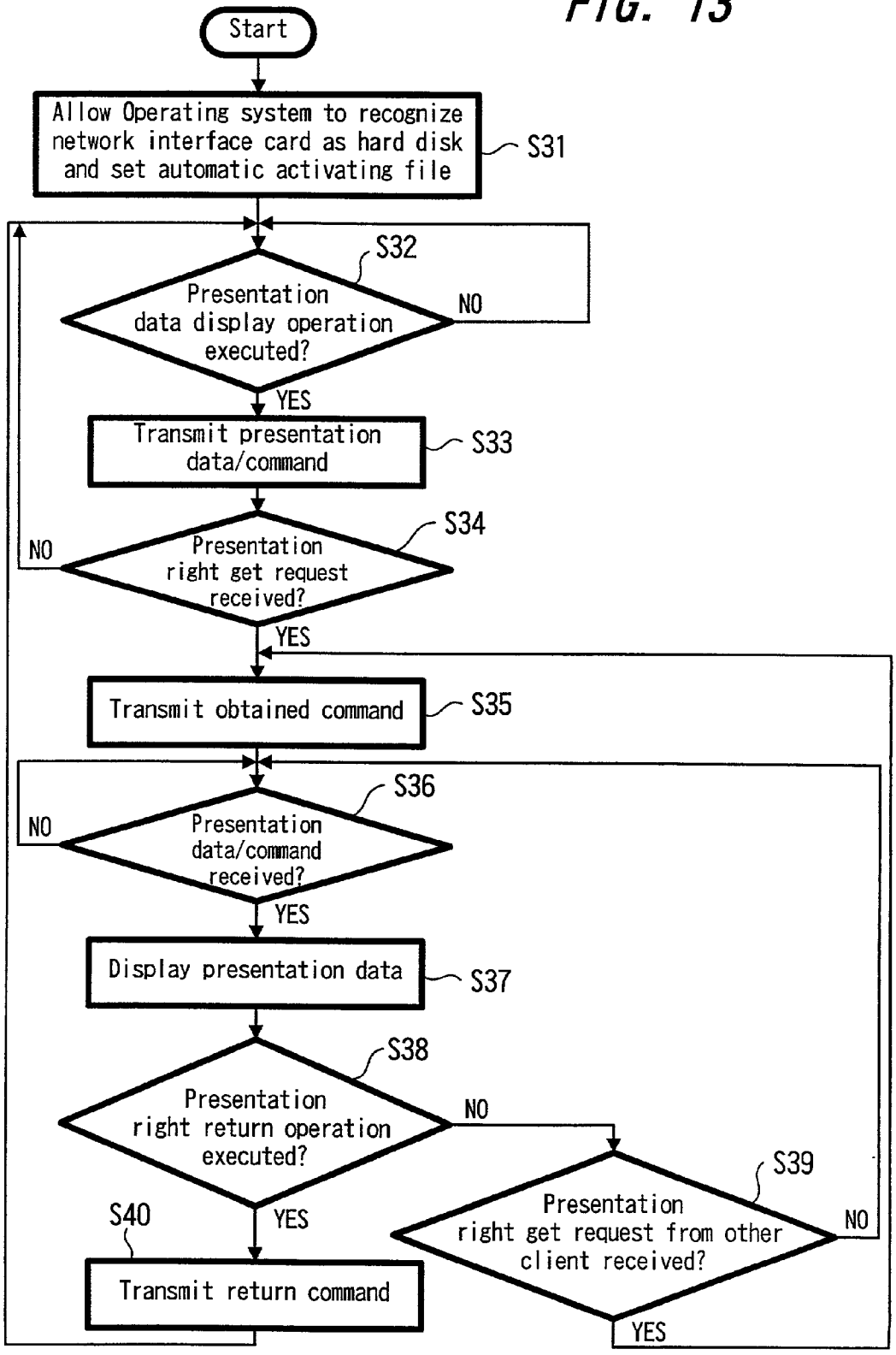
Start
Allow Operating system to recognize network interface card as hard disk and set automatic activating file
S31
S32
Presentation data display operation executed?
NO
YES
Transmit presentation data/command
S33
S34
Presentation right get request received?
NO
YES
Transmit obtained command
S35
S36
Presentation data/command received?
NO
YES
Display presentation data
S37
S38
Presentation right return operation executed?
NO
YES
S39
Presentation right get request from other client received?
NO
YES
S40
Transmit return command

FIG. 14

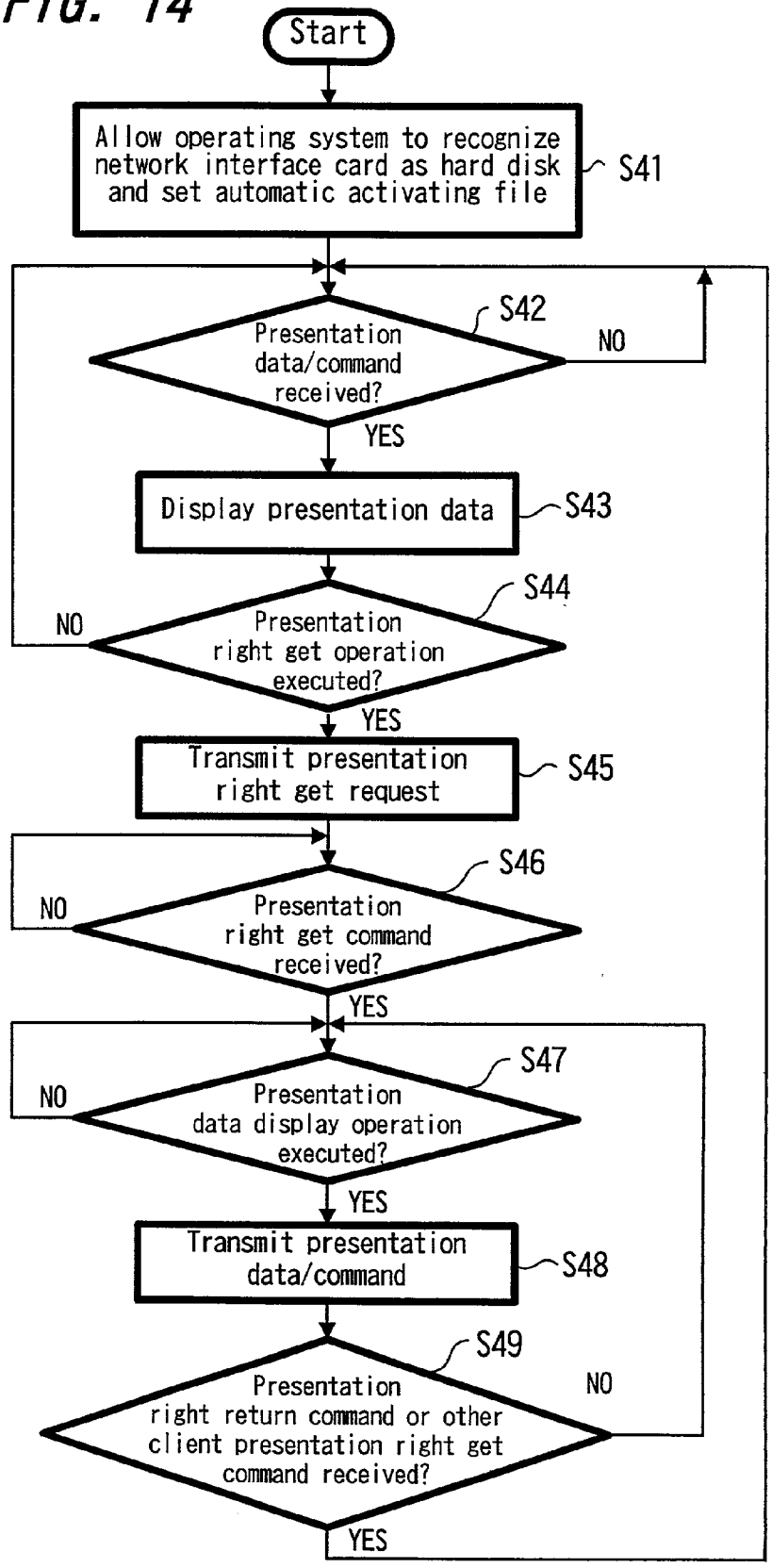
Start
Allow operating system to recognize network interface card as hard disk and set automatic activating file
S41
Presentation data/command received?
S42
NO
YES
Display presentation data
S43
Presentation right get operation executed?
S44
NO
YES
Transmit presentation right get request
S45
Presentation right get command received?
S46
NO
YES
Presentation data display operation executed?
S47
NO
YES
Transmit presentation data/command
S48
Presentation right return command or other client presentation right get command received?
S49
NO
YES

FIG. 15

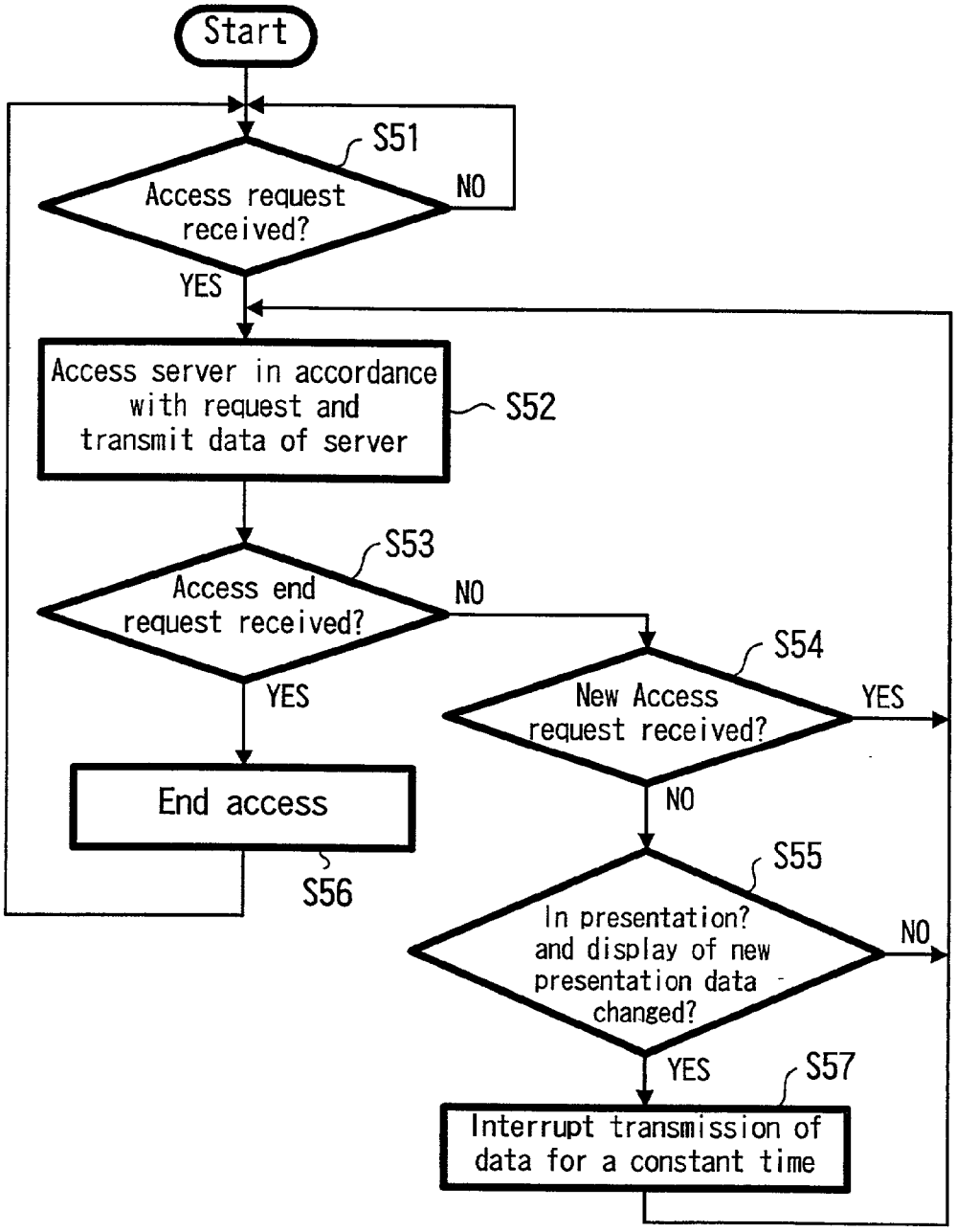
Start
S51
Access request received?
NO
YES
Access server in accordance with request and transmit data of server
S52
S53
Access end request received?
NO
YES
End access
S56
S54
New Access request received?
YES
NO
S55
In presentation? and display of new presentation data changed?
NO
YES
S57
Interrupt transmission of data for a constant time

FIG. 16

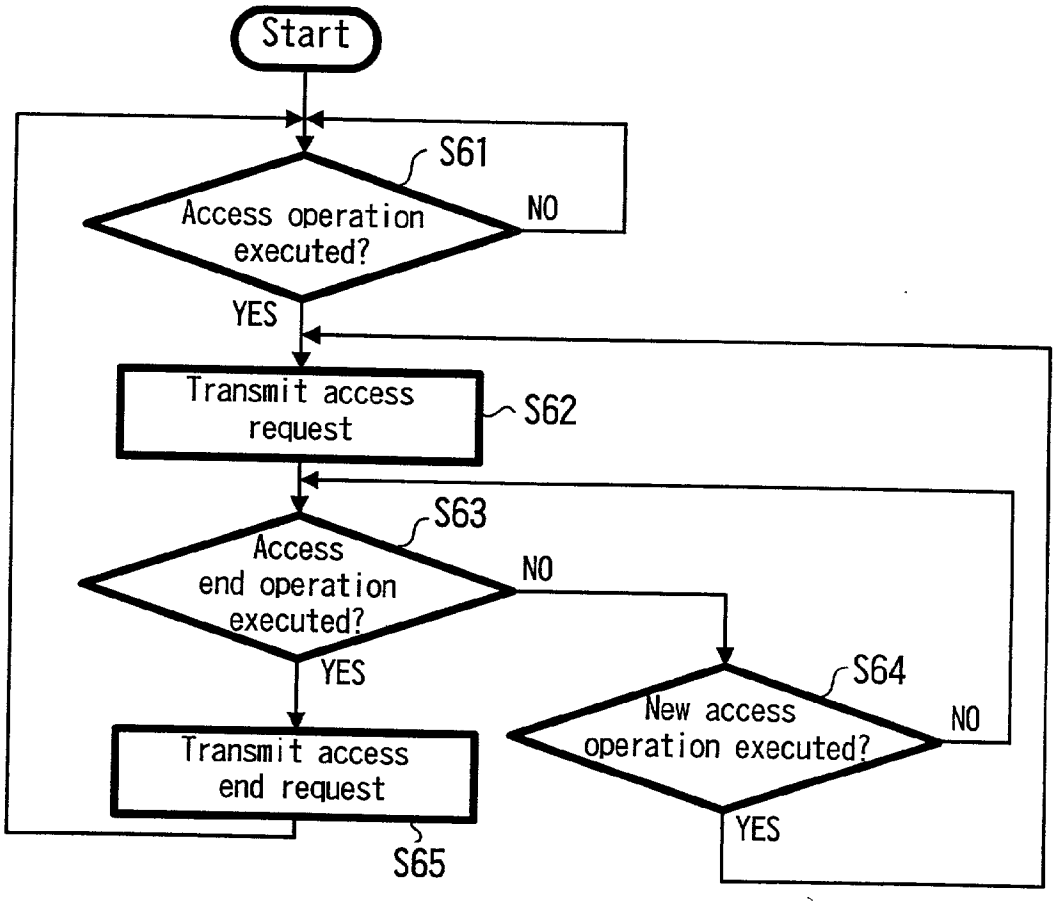
Start
S61
Access operation executed?
NO
YES
Transmit access request
S62
S63
Access end operation executed?
NO
YES
S64
New access operation executed?
NO
YES
Transmit access end request
S65

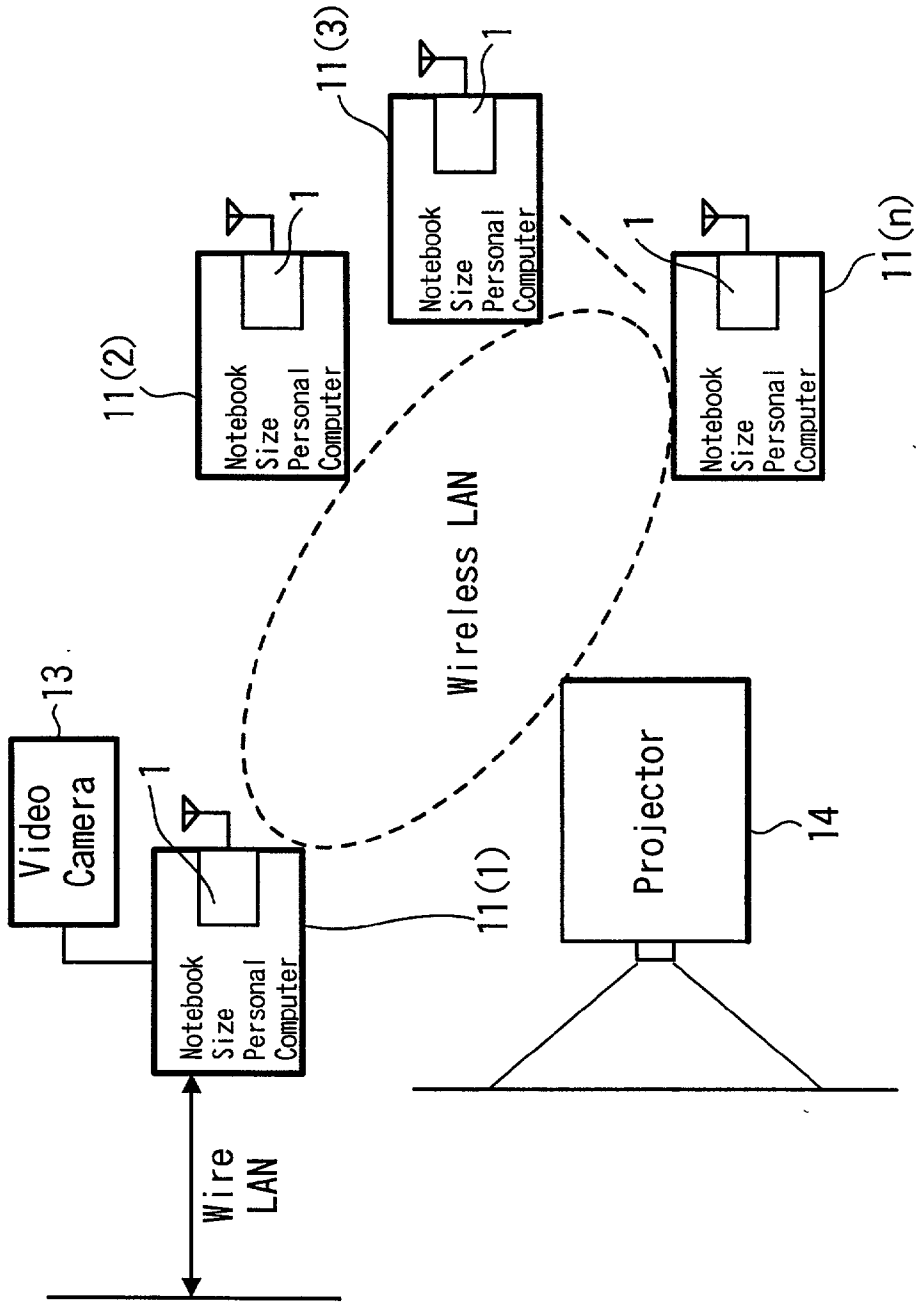
Video Camera
13
1
Notebook Size Personal Computer
11(1)
Wire LAN
Wireless LAN
Notebook Size Personal Computer
11(2)
1
Notebook Size Personal Computer
11(3)
1
Notebook Size Personal Computer
11(n)
1
Projector
14

FIG. 17

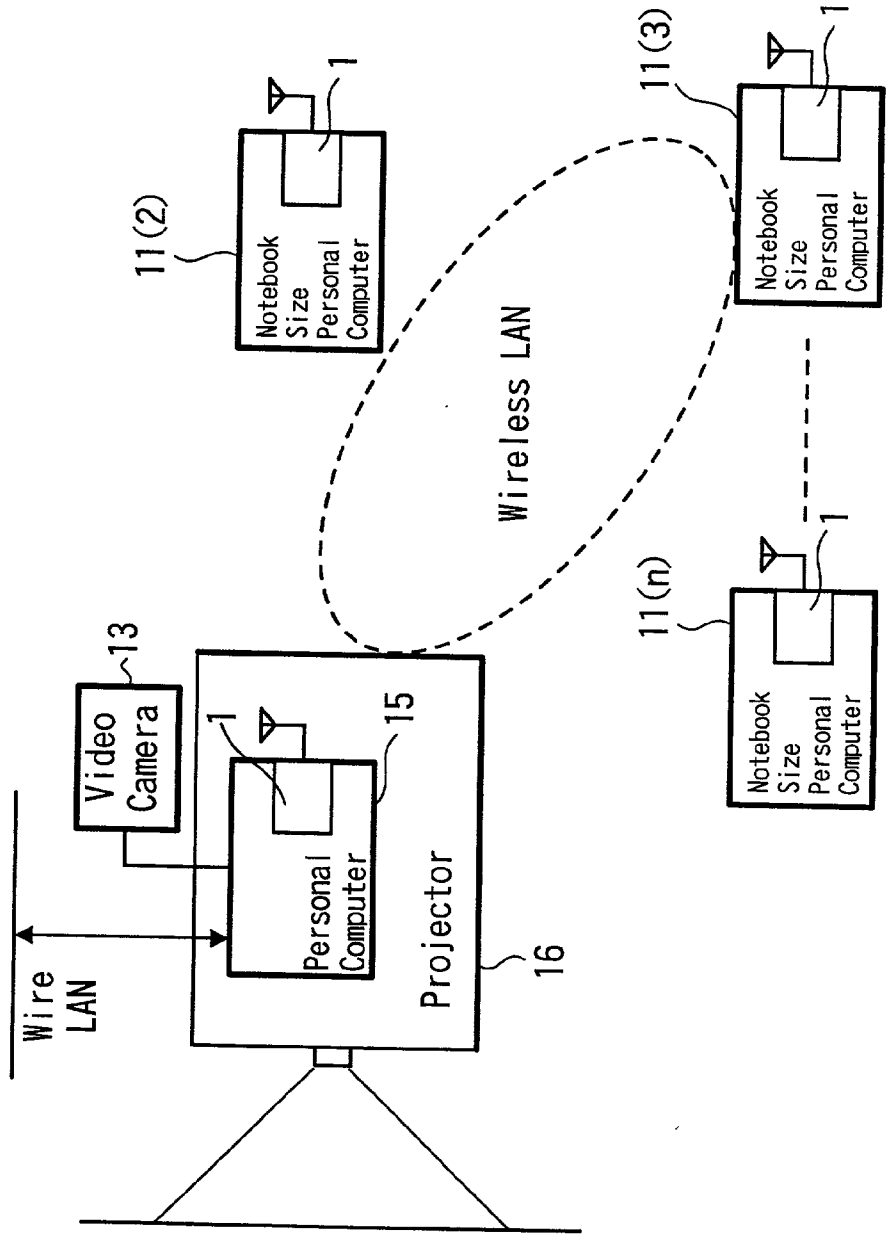
Wire LAN
Video Camera
13
1
Personal Computer
15
Projector
16
Wireless LAN
11(2)
Notebook Size Personal Computer
1
11(3)
Notebook Size Personal Computer
1
11(n)
Notebook Size Personal Computer
1

FIG. 18

FIG. 19

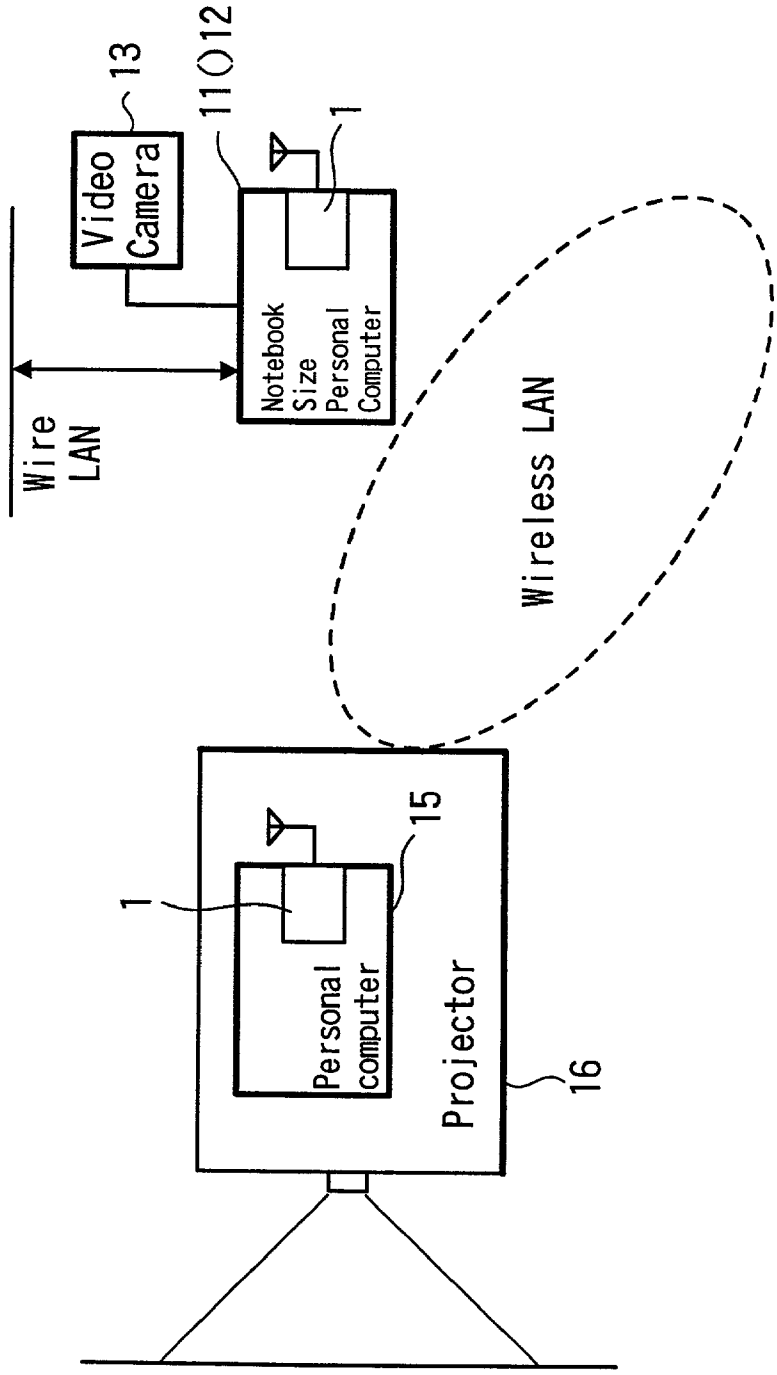
Wire LAN
Video Camera
13
11012
1
Notebook Size Personal Computer
Wireless LAN
1
Personal computer
15
Projector
16

CARD TYPE NETWORK INTERFACE, NETWORK CONFERENCE TERMINAL DEVICE AND NETWORK CONFERENCE SYSTEM

TECHNICAL FIELD

[0001] The present invention relates to a card type network interface attached to an information terminal device such as a personal computer, a network conference terminal device using such card type network interface and a network conference system using this network conference terminal device.

BACKGROUND ART

[0002] Network I/F (interface) cards which are PC cards based on the standards of PCMCIA (personal computer memory card interface adapter) and which are capable of connecting personal computers to a LAN (local area network) are spreading increasingly. When this network interface card is inserted into a PC card slot of a personal computer, it becomes possible to connect this personal computer to the LAN.

[0003] In order to connect a personal computer (hereinafter referred to as a "personal computer") to the LAN, it is necessary to execute in advance a setting for connecting personal computers to the LAN (hereinafter referred to as a "network setting"). This network setting contains a setting of an IP address (identification information and location information for controlling a path) of such personal computer in the LAN and a setting of an IP address of a DNS server (server for providing a translation between IP addresses and domain names).

[0004] **FIG. 1** shows a personal computer to which a conventional network interface card is connected and to which reference will be made in explaining a function of a portion used to execute this network setting. In the operating system (e.g., Windows 95 or Windows 98 ("Windows" is a registered trademark)) of personal computer, there is supported a network function. This network function contains a function which displays a network setting picture to execute a network setting based on user's input operations.

[0005] On the other hand, a device driver which is software to control a conventional network interface card does not contain a network setting function. For this reason, a network setting of a personal computer is executed by using a network function of the operating system of the personal computer.

[0006] **FIG. 2** shows a working procedure executed by users to connect the personal computer shown in **FIG. 1** to the LAN. Users insert the network interface card into the personal computer and activate the operating system of the personal computer to display a control panel on the screen of the personal computer. Then, users select a network setting icon from the control panel and enters data in accordance with instructions of a network setting picture displayed when users select the corresponding icon. Thereafter, users restarts the operating system and the network setting is completed.

[0007] As described above, in order to attach the conventional network interface card to the personal computer so that the personal computer may be connected to the LAN, users have to activate the operating system of the personal computer to make operations to execute the network setting. Accordingly, these operations are difficult to understand for users who have little knowledge of the operating system. When the notebook size personal computer, for example, are carried into various places and is connected to the LAN, the above operations should be made at every place so that such operations become troublesome for users who are rich in knowledge of the operating system.

[0008] Under circumstances in which a DHCP which is a protocol capable of managing information to execute the network setting in a centralized fashion is supported by the operating system, since the operating system side automatically executes the network setting processing, users need not do operations to execute the network setting. However, in actual practice, most of the users have personal computers in which the DHCP is not supported by the Cooperating system.

[0009] In view of the aforesaid aspect, the first problem to be solved by the present invention is that, when the network interface card is attached to the personal computer to thereby connect the personal computer to the LAN, even though the DHCP is not supported by the operating system of the personal computer, the network setting can be executed without troubling users.

[0010] On the other hand, in the places such as various kinds of meetings, presentations and lecture meetings (these meetings, presentations and lecture meetings will be generally referred to as a "conference" in this specification), heretofore, the presentation is made by displaying presentation data such as images and illustrations on a projector. However, depending on the scale of the conference hall and the size of the screen of the projector, those who have been seated distant from the projector cannot always watch presentation data displayed on the projector well.

[0011] In recent years, there is increasingly spread such a form in which presentation data can be displayed on a personal computer connected to the LAN at each seat in the conference hall. As described above, if the conference is held by effectively utilizing the LAN, then participants on all seats become able to watch presentation data satisfactorily.

[0012] However, if the personal computer is provided at each seat as equipment, then it is unavoidable that the cost of equipment in the conference hall will be increased. If notebook size personal computers brought by the participants of the conference are connected to the LAN within the conference hall, then the cost of equipment can be prevented from being increased. In that case, the operations for executing the network setting become troublesome for the participants.

[0013] In view of the aforesaid aspect, the second problem to be solved by the present invention is that a conference system using the LAN can be constructed without increasing the cost of equipment of the conference hall and also without imposing a burden on the participants in order to execute the network setting.

DISCLOSURE OF INVENTION

[0014] In order to solve the above first problem, there is proposed a card type network interface which can be attached to an information terminal device such as a personal computer. This card type network interface includes a

connecting means for connecting this information terminal device to a LAN and a setting means for requesting a host of the LAN to transmit setting information necessary for setting a network to connect the information terminal device to the LAN and setting the network by using setting information transmitted from the host based on the fact that this card type network interface is attached to the information terminal device.

[0015] This card type network interface includes not only the connecting means for connecting the information terminal device to the LAN (i.e., function to connect the information terminal device to the LAN) but also the setting means for setting the network. Then, when this card is attached to the information terminal device, this setting means requests the host of the LAN to transmit the setting information necessary for setting the network and sets the network by using the setting information transmitted from the host.

[0016] As described above, when the card type network interface is attached to the information terminal device, since the network is automatically set by this setting means, the network can be set without troubling users.

[0017] Therefore, in the conference using the LAN, for example, if the card type network interfaces are prepared in the conference hall and these card type network interfaces are attached to the information terminal devices such as notebook size personal computers brought by those who attended the conference, the network by which members are assumed to attend the conference can be set without troubling those who attend the conference. Simultaneously, the cost of equipment in the conference hall can be prevented from being increased unlike the case in which the information terminal device such as the personal computer should be provided in each seat as equipment.

[0018] This card type network interface further includes a determining means for determining based on the fact that this card type network interface is attached to the information terminal device whether the information terminal device is served as a host or a client of the LAN and a processing means for transmitting requested setting information to the client if it is determined by this determining means that the information terminal device is served as the host. The setting means requests the setting information if it is determined by this determining means that the information terminal device is served as the client.

[0019] Consequently, the host of the LAN also is comprised of the information terminal device to which this card type network interface is attached. Accordingly, the system of the LAN can be constructed without providing an exclusive-device as a host independently of this card type network interface and the information terminal device. Therefore, in the conference using the LAN, for example, the cost of equipment in the conference hall can be suppressed more.

[0020] Based on the fact that the card type network interface is attached to the information terminal device and on the condition that the command for inhibiting the information terminal device from being determined as the host is not received through the LAN, this determining means determines this information terminal device as the host and transmits the command for inhibiting other information terminal device from being determined as the host through the LAN. As a result, the first information terminal device to which the card type network interface is attached within the area of the LAN is determined as the host.

[0021] This card type network interface further includes a processing means for requesting the host to get a presentation right based on the fact that the information terminal device is determined as the client by the determining means, the setting of the network is completed by the setting means and that a predetermined operation is carried out by the information terminal device and transmitting presentation data to the host and other clients based on the fact that the host got the presentation right and a processing means for allowing the client to get the presentation right based on the fact that the information terminal device is determined as the host by the determining means and that the processing means requests the host to get the presentation right.

[0022] Consequently, in the conference using the LAN, for example, those who attended the conference can get the presentation right by operating the information terminal devices in hand and can transmit presentation data. Therefore, those who attend the conference can make a presentation without leaving the seats.

[0023] When the connecting means connects the information terminal device to the wireless LAN, this card type network interface further includes a processing means for receiving in a polling system a request from the client in which the setting of the network was completed based on the fact that the information terminal device is determined as the host by the determining means and wherein the setting means requests the setting information at the end of the polling cycle.

[0024] Consequently, the host can accurately receive requests transmitted through the wireless LAN from a plurality of clients in which the setting of the network was completed. Simultaneously, the host can accurately receive the setting information request through the wireless LAN.

[0025] Presentation application software (program in which a processing for displaying and controlling presentation data is written) is stored in this card type network interface.

[0026] As a result, in the conference using the LAN, for example, when those who attend the conference bring information terminal devices in which the presentation application software is not installed, if this card type network interface is attached to such information terminal device, then the information terminal device becomes able to execute this presentation application software and to display the presentation data.

[0027] When the information terminal device is such one which automatically activates the application software stored in the hard disk (e.g., a personal computer in which the operating system for automatically activating the application software stored in the hard disk is installed), the card type network interface allows the information terminal device to recognize the card type network interface as the hard disk so that the presentation application software may be automatically activated in the information terminal device.

[0028] Consequently, those who attend the conference need not carry out operations to activate this presentation

application software and a burden imposed upon those who attend the conference can be alleviated more.

[0029] In order to solve the above second problem, there is proposed a network conference terminal device in which a card type network interface is attached to an information terminal device such as a personal computer, for example, and which includes a presentation processing means for displaying and controlling presentation data. This card type network interface includes a connecting means for connecting this information terminal device to the wireless LAN and a setting means for requesting a host of this wireless LAN to transmit setting information necessary for setting the network to connect this information terminal device to this wireless LAN based on the fact that the card type network interface is attached to this information terminal device and setting the network by using the setting information transmitted from the host.

[0030] This network conference terminal device is constructed by using the card type network interface for the wireless LAN of the above card type network interface. Accordingly, if the card type network interface is prepared in the conference hall and the information terminal devices are brought by those who attend the conference, then the network by which participants are assumed to attend the conference using the wireless LAN can be set without troubling those who attend the conference. At the same time, the cost of equipment of the conference hall can be prevented from being increased unlike the case in which the information terminal device should be provided in each seat as equipment.

[0031] This network conference terminal device includes a presentation processing means for displaying and controlling presentation data. This network conference terminal device can display presentation data by this presentation processing means.

[0032] Also in this network conference terminal device, this card type network interface further includes a determining means for determining based on the fact that this card type network interface is attached to the information terminal device whether the information terminal device is served as a host or a client of the LAN and a processing means for transmitting requested setting information to the client if it is determined by this determining means that the information terminal device is served as the host. The setting means requests the setting information if it is determined by this determining means that the information terminal device is served as the client.

[0033] Consequently, the host of the LAN also is comprised of the network conference terminal device. Accordingly, the wireless LAN conference system can be constructed without providing an exclusive-device as a host independently of this network conference terminal device. Therefore, the cost of equipment in the conference hall can be suppressed more.

[0034] As mentioned before, this determining means determines the first information terminal device to which the card type network interface is attached within the area of the wireless LAN as the host.

[0035] This network conference terminal device further includes a processing means for requesting the host to get a presentation right based on the fact that the information terminal device is determined as the client by the determining means, the setting of the network is completed by the setting means and that a predetermined operation is carried out by the information terminal device and transmitting presentation data to the host and other clients based on the fact that the host got the presentation right and a processing means for allowing the client to get the presentation right based on the fact that the information terminal device is determined as the host by the determining means and that the processing means requests the host to get the presentation right.

[0036] Consequently, in the conference using the LAN, for example, those who attended the conference can get the presentation right by operating the information terminal devices in hand and can transmit presentation data. Therefore, those who attend the conference can make a presentation without leaving the seats.

[0037] Also in this network conference terminal device, this card type network interface further includes a processing means for receiving in a polling system a request from the client in which the setting of the network was completed based on the fact that the information terminal device is determined as the host by the determining means and wherein the setting means requests the setting information at the end of the polling cycle.

[0038] Consequently, the host can accurately receive requests transmitted through the wireless LAN from a-plurality of clients in which the setting of the network was completed. Simultaneously, the host can accurately receive the setting information request through the wireless LAN.

[0039] In this network conference terminal, the presentation processing means can be realized when the information terminal device executes the presentation application software stored in the network interface card.

[0040] Consequently, the information terminal device in which the presentation application software is not installed becomes able to display the presentation data.

[0041] When the information terminal device is such one which automatically activates the application software stored in the hard disk, the card type network interface allows the information terminal device to recognize the card type network interface as the hard disk so that the presentation application software may automatically be activated in the information terminal device.

[0042] Consequently, those who attend the conference need not carry out the operations to activate this presentation application software and a burden imposed upon those who attend the conference can be alleviated more.

[0043] In order to solve the above second problem, there is proposed a network conference system (wireless LAN conference system) in which there are provided a host of a wireless LAN and a client of the wireless LAN, the client is constructed such that a card type network interface is attached to an information terminal device and includes a presentation processing means for displaying and controlling presentation data. This card type network interface includes a connecting means for connecting this information terminal device to the wireless LAN and a setting means for requesting a host of this wireless LAN to transmit setting information necessary for setting the network to connect this

information terminal device to this wireless LAN based on the fact that the card type network interface is attached to this information terminal device and setting the network by using the setting information transmitted from the host. The host transmits the setting information to the client based on this setting information request and also transmits the presentation data to the client in which the setting of the network was completed.

[0044] This network conference system is constructed by using the above network conference terminal device as the client (i.e., the above wireless LAN card type network interface).

[0045] Therefore, the network of the clients can be set without troubling those who attend the conference, and the system can be constructed without increasing the cost of equipment of the -conference hall.

[0046] Also in this network conference system, the card type network interface further includes a determining means for determining based on the fact that this card type network interface is attached to the information terminal device whether the information terminal device is served as a host or a client of the LAN and a processing means for transmitting requested setting information to the client if it is determined by this determining means that the information terminal device is served as the host. The setting means requests the setting information if it is determined by this determining means that the information terminal device is served as the client.

[0047] Consequently, since the host of the LAN also is comprised of the same network conference terminal device, an exclusive-device need not be provided within the system as the host, and hence the cost of equipment in the conference hall can be suppressed more.

[0048] As mentioned before, this determining means determines the first information terminal device to which the card type network interface is attached within the area of the wireless LAN as the host.

[0049] Also in this network conference system, this card type network interface further includes a processing means for requesting the host to get a presentation right based on the fact that the information terminal device is determined as the client by the determining means, the setting of the network is completed by the setting means and that a predetermined operation is carried out by the information terminal device and transmitting presentation data to the host and other clients based on the fact that the host got the presentation right and a processing means for allowing the client to get the presentation right based on the fact that the information terminal device is determined as the host by the determining means and that the processing means requests the host to get the presentation right.

[0050] Consequently, those who attend the conference can get the presentation right by operating the network conference terminal devices in hand and can transmit presentation data. Therefore, those who attended the conference can make a presentation without leaving the seats.

[0051] Also in this network conference system, this card type network interface further includes a processing means for receiving in a polling system a request from the client in which the setting of the network was completed based on the fact that the information terminal device is determined as the host by the determining means and wherein the setting means requests the setting information at the end of the polling cycle.

[0052] Consequently, the host can accurately receive the requests transmitted through the wireless LAN from a plurality of clients in which the setting of the network was completed. Simultaneously, the host can accurately receive the setting information request through the wireless LAN.

[0053] Also in this network conference system, the presentation processing means can be realized when the information terminal device executes the presentation application software stored in the network interface card.

[0054] Consequently, the client and the host using the information terminal device in which the presentation application software is not installed become able to display the presentation data.

[0055] When the information terminal device is such one which automatically activates the application software stored in the hard—disk, the card type network interface allows the information terminal device to recognize the card type network interface as the hard disk so that the presentation application software may be automatically activated in the information terminal device.

[0056] Consequently, those who attend the conference need not carry out the operations to activate this presentation application software and a burden imposed upon those who attend the conference can be alleviated more.

[0057] In order to solve the above second problem, there is proposed a network conference system in which there are provided an image display device and a client of the wireless LAN. This image display device includes an information terminal device to which a card type network interface can be attached. This card type network interface is attached to this information terminal device and this information terminal device includes a presentation processing means for displaying and controlling presentation data. The client is constructed such that a card type network interface is attached to an information terminal device and includes this presentation processing means. This card type network interface includes a connecting means for connecting this information terminal device to the wireless LAN, a determining means for determining based on the fact that the card type network interface is attached to this information terminal device whether this information terminal device is served as a host or a client of the wireless LAN, a setting means for requesting the host of this wireless LAN to transmit setting information necessary for setting the network to connect this information terminal device to this wireless LAN based on the fact that the information terminal device is determined as the client by the determining means and setting the network by using the setting information transmitted from the host, a processing means for transmitting the requested setting information to the client based on the fact that the information terminal device is determined as the host by the determining means and transmitting presentation data to the client in which the setting of the network was completed, a processing means for requesting the host to get a presentation right based on the fact that the information terminal device is determined as the client by the determining means, the setting of the network was com-

pleted by the setting means and a predetermined operation was executed by the information terminal device and transmitting presentation data to the host and the client based on the fact that the host got the presentation right and a processing means for allowing the client to get the presentation right based on the fact that the information terminal device is determined as the host by the determining means and that the host is requested to get the presentation right. The image display device is such one in which the information terminal device belonging to the image display device is determined as the host by the determining means.

[0058] This network conference system has the arrangement in which the above network conference terminal device is used as the client (i.e., the above wireless LAN card type network interface is used), the image display device having the information terminal device to which the card type network interface can be attached is provided as the image display device such as the projector and this image display device serves both as an image display device and a host.

[0059] Accordingly, the network of the clients can be set without troubling those who attend the conference, and the system can be constructed without increasing the cost of equipment of the conference hall. Moreover, those who attend the conference can make a presentation without leaving the seats.

[0060] Then, the same presentation data as the presentation data displayed on the image display device can be directly transmitted from the image display device through the wireless LAN to the client and thereby displayed on the client. At the same time, the presentation data can be directly transmitted from the client through the wireless LAN to the image display device and thereby the presentation data can be displayed on the image display device.

[0061] Also in this network conference system, the card type network interface further includes a processing means for receiving in a polling system a request from the client in which the setting of the network was completed based on the fact that the information terminal device is determined as the host by the determining means and awaiting the request of the setting information at the end of the polling cycle and wherein the setting means requests the setting information at the end of the polling cycle.

[0062] Consequently, the host can accurately receive requests transmitted through the wireless LAN from a plurality of clients in which the setting of the network was completed. Simultaneously, the host can accurately receive the request of the setting information through the wireless LAN.

[0063] Also in this network conference system, the presentation processing means can be realized when the information terminal device executes the presentation application software stored in the network interface card.

[0064] Consequently, the client and the host using the information terminal device in which the presentation application software is not installed become able to display the presentation data.

[0065] When the information terminal device is such one which automatically activates the application software stored in the hard disk, the card type network interface allows the information terminal device to recognize the card type network interface as the hard disk so that the presentation application software may automatically be activated in the information terminal device.

[0066] Consequently, those who attend the conference need not carry out the operations to activate this presentation application software and a burden imposed upon those who attend the conference can be alleviated more.

BRIEF DESCRIPTION OF DRAWINGS

[0067] **FIG. 1** is a functional block diagram showing a portion of a personal computer having a conventional network interface card and which portion is used to execute a network setting.

[0068] **FIG. 2** is a diagram showing a working procedure necessary to execute a network setting of the personal computer shown in **FIG. 1**.

[0069] **FIG. 3** is a perspective view showing an example of an outward appearance of a network interface card to which the present invention is applied.

[0070] **FIG. 4** is a block diagram showing an example of a circuit arrangement of the network interface card shown in **FIG. 3**.

[0071] **FIG. 5** is a diagram showing an example of an overall arrangement of a network conference system according to the present invention.

[0072] **FIG. 6** is a flowchart to which reference will be made in explaining processing contents of a "host/client decision program".

[0073] **FIG. 7** is a flowchart to which reference will be made in explaining processing contents of a "host program" corresponding to a network setting processing of a "client program".

[0074] **FIG. 8** is a flowchart to which reference will be made in explaining a network setting processing which is a part of the processing contents of the "client program".

[0075] **FIG. 9** is a timing chart showing the manner in which a request signal is transmitted or received in accordance with a polling system.

[0076] **FIG. 10A** is a diagram showing formats of the polling command and the request signal shown in **FIG. 9**.

[0077] **FIG. 10B** is a diagram showing examples of contents of data or command.

[0078] **FIG. 11** is a functional block diagram showing a portion, of the client shown in **FIG. 5**, used to execute the network setting.

[0079] **FIG. 12** is a diagram showing a working procedure which is used to execute the network setting of the client shown in **FIG. 5**.

[0080] **FIG. 13** is a flowchart to which reference will be made in explaining a part of the processing contents of the "host program".

[0081] **FIG. 14** is a flowchart to which reference will be made in explaining a part of the processing contents of the "client program".

[0082] **FIG. 15** is a flowchart to which reference will be made in explaining a part of the processing contents of the "host program".

[0083] **FIG. 16** is a flowchart to which reference will be made in explaining a part of the processing contents of the "client program".

[0084] **FIG. 17** is a diagram showing other example of an overall arrangement of a network conference system according to the present invention.

[0085] **FIG. 18** is a diagram showing a further example of an overall arrangement of a network conference system according to the present invention.

[0086] **FIG. 19** is a diagram showing yet a further example of an overall arrangement of a network conference system according to the present invention.

BEST MODE FOR CARRYING OUT THE INVENTION

[0087] Embodiments according to the present invention will be described below with reference to the drawings.

[0088] **FIG. 3** shows an example of an outward appearance and an arrangement of a network interface card, to which the present invention is applied, together with a notebook size personal computer to which this network interface card can be attached. This network interface card **1** has a shape and a dimension based on a type **2** or a type **3** of the standards of the PCMCIA. A notebook size personal computer **2** includes a personal computer card slot **2***a* into which there can be inserted the network interface card **1**.

[0089] **FIG. 4** shows an example of a circuit arrangement of this network interface card **1**. The network interface card **1** includes a PCMCIA interface **3**, a network interface **4**, an RF modulator **5**, an RF demodulator **6**, an antenna **7**, a CPU **8**, a flash ROM **9** and a RAM **10**.

[0090] The PCMCIA interface **3** is an interface section which interacts with a personal computer having a PC card slot like the notebook size persona computer **2** shown in **FIG. 3**. Through this PCMCIA interface **3**, data and commands are transmitted and received between the personal computer having the network interface card **1** and the network interface card **1**.

[0091] The network interface **4** transforms data and commands, transmitted thereto from the personal computer through the PCMCIA interface **3**, into data and commands conforming to the format of predetermined wireless LAN standards (e.g., the standards of **11** works groups in **802** of the IEEE **802**), transmits the data and commands thus transformed into the RF modulator **5**, and inverse-transforms data and commands, transmitted from the RF demodulator **6**, and transmits the data and commands thus inverse-transformed to the PCMCIA interface **3**.

[0092] The RF modulator **5** modulates data and commands, transmitted from the network interface **4**, into a radio frequency signal based on the standards and transmits the radio frequency signal from the antenna **7**. The RF demodulator **6** demodulates the radio frequency signal received at the antenna **7** to provide data and commands, and transmits the data and the commands to the network interface **4**. While **FIG. 3** shows the arrangement of the outward appearance in which the antenna **7** is an internal antenna, the present invention is not limited thereto and an antenna having a shape exposed to the outside may be used in response to a frequency band and the like.

[0093] The CPU **8** controls the PCMCIA interface **3** by executing a microprogram (firmware) stored in the flash ROM **9** so that data and command may be transmitted and received between the network interface card and the personal computer having the network interface card **1**, and also controls the network interface **4** so that data and commands may be transmitted and received through the wireless LAN in accordance with a predetermined communications protocol (e.g., TCP/IP protocol).

[0094] As the features of the present invention, the flash ROM **9** stores therein the following microprograms (1) to (4). Contents processed by the programs (1) to (3) will be described in the examples of operations of a host and a client of a network conference system as will be described later on.

[0095] (1): A program which ha described processing for enabling the personal computer having the network interface card **1** to function as a host for managing the wireless LAN (hereinafter referred to as a "host program")

[0096] (2): A program which has described processing for enabling the personal computer having the network interface card **1** to function as a client using the wireless LAN under management of the host hereinafter referred to as a "client program").

[0097] (3): A program which has described processing for deciding whether the host program or the client program should be executed (hereinafter referred to as a "host/client decision program).

[0098] (4): Presentation application software (program which has described processing for displaying and controlling presentation data such as images and graphical. This application software contains graphic viewer which is software for displaying images, software for creating, displaying and controlling graphical (e.g., Microsoft PowerPoint" manufactured by Microsoft, "Microsoft" and "PowerPoint" are registered trademarks of Microsoft) and WWW browser which is software used to access WWW server on the Internet to display images of Web pages and the like.

[0099] The RAM **10** stores therein various data in a process during which the CPU **8** executes microprograms within the flash ROM **9**.

[0100] Next, **FIG. 5** shows an example of an arrangement of a network conference terminal device (wireless LAN conference terminal device) according to the present invention and an example of an overall arrangement of a network conference system (wireless LAN conference system) according to the present invention.

[0101] This wireless LAN conference system is comprised of a plurality of (e.g., about **30** to **50**) wireless LAN conference terminal devices **11** (**11**(**1**) to **11**(*n*)), a projector **12** and a video camera **13**.

[0102] Each wireless LAN conference terminal device **11** is constructed in such a manner that the network interface card **1** shown in **FIGS. 3 and 4** is attached to a notebook size personal computer (Windows **95** or Windows **98**, for example, is installed as the operating system) like the

notebook size personal computer **2** shown in **FIG. 3**. Participants bring the notebook size personal computer with them and the network interface cards **1** are prepared in the conference hall.

[**0103**] One (**11(1)**) of the wireless LAN conference terminal devices **11** is served as a host of the wireless LAN, and remaining (n-i) terminal devices (**11(2)** to **11(*n*)**) are served as clients of the wireless LAN.

[**0104**] The wireless LAN conference terminal device **11** is determined when the network interface card **1** starts the "host/client decision program" stored in the aforementioned flash ROM **9** based on the fact that the operating system of the notebook size personal computer is activated after the network interface card **1** has been attached to the notebook size personal computer (or based on the fact that the network interface card **1** has been attached to the notebook size personal computer whose operating system was activated).

[**0105**] **FIG. 6** shows the processed contents of this "host/client decision program". First, the network interface card **1** is initialized (data stored when this network interface card was attached to and used by the notebook size personal computer is erased (step **S1**). Subsequently, it is determined whether or not a command for inhibiting the activation of the "host program" is received through the wireless LAN (step **S2**).

[**0106**] If this command is not received, then the "host program" is activated (step **S3**). Then, until the network interface card **1** is ejected from the notebook size personal computer or the operating system of the notebook size personal computer is ended, the command for inhibiting the activation of the "host program" is continuously transmitted through the wireless LAN (steps **S4**, **S5**). Then, when the network interface card **1** is ejected from the notebook size personal computer or the operating system is ended, control is ended.

[**0107**] If on the other hand the above command is received at the step **S2**, then the "client program" is activated (step **S6**), and control is ended.

[**0108**] As a consequence, the wireless LAN conference terminal device **11** which was the first terminal device to which the network interface card **1** was attached and in which the operating system of the notebook size personal computer was activated within the conference hall (within the wireless LAN area) is served as the host after the "host program" was activated by executing the steps **S2** to **S4**.

[**0109**] Since the wireless LAN conference terminal device **11** which was the second terminal device to which the network interface card **1** was attached and in which the operating system of the notebook size personal computer was activated receives the command transmitted from the first wireless LAN conference terminal device **11** to which the network interface card **1** was attached and in which the operating system of the notebook size personal computer was activated, this terminal device is served as the client after the "client program" was activated by executing the steps **S1**, **S2** and **S5**.

[**0110**] In actual practice, a participant who plays a part of a coordinator in the conference first attaches the network interface card **1** to the notebook size personal computer or the participant first activates the operating system of the notebook size personal computer to make its own wireless LAN conference terminal device **11** become the host.

[**0111**] As shown in **FIG. 5**, the host **11(1)** is connected through an external display output terminal of the notebook size personal computer to the projector **12** located within the conference hall and is also connected through a DV terminal of the notebook size personal computer to the video camera **13**.

[**0112**] The host **11(1)** is connected through a network port of the notebook size personal computer to a wire LAN (e.g., Ethernet) which was constructed in advance within a building in the conference hall. This wire LAN is connected to the Internet through a gateway, not shown.

[**0113**] The "client program" contains processings used to execute the network setting to connect the clients **11(2)** to **11(*n*)** to the wireless LAN. The network interface cards **1** of the clients **11(2)** to **11(*n*)** whose "client programs" were activated immediately start this network setting processing.

[**0114**] The "host program" contains processings to transmit setting information necessary for the network setting to the clients **11(2)** to **11(*n*)** in response to the network setting processing of this "client program". The host **11(1)** immediately starts the processing of the "host program".

[**0115**] **FIG. 7** shows processed contents of the "host program" corresponding to the network setting processing. **FIG. 8** shows the contents of the network setting processing. As shown in **FIG. 7**, the network interface card **1** of the host **11(1)** displays pictures which instruct the notebook size personal computer to enter the following information (a) to (d):

[**0116**] (a): Enter net mask (information for dividing the IP address into a previously-determined network portion and a host portion which can be set freely);

[**0117**] (b): Enter IP address of host;

[**0118**] (c): Enter IP address of DNS server (server for providing a translation between IP addresses and domain names); and

[**0119**] (d): Enter IP address of gateway (a means placed at the connected portion between the wire LAN and the Internet in **FIG. 3**)

[**0120**] Then, when the coordinator of the conference enters these information by operating the notebook size personal computer in accordance with the instructions displayed on the screen, these information are registered on the RAM **10** as the database (step **S12**). Subsequently, the host is placed in the standby mode for awaiting the network setting request from the client (step **S13**).

[**0121**] The "host program" contains a processing for receiving various kinds of requests from the network interface card **1** of the client in which the network setting was already completed (client whose IP address was already registered as the database) in the polling system for sequentially calling these clients. Moreover, the "client program" contains a processing for transmitting a request, generated after the network setting has been completed, in response to this calling.

[**0122**] **FIG. 9** shows the manner in which the requests are transmitted and received in accordance with this polling

system. The network interface card **1** of the host **11(1)** transmits a polling command for permitting the transmission of the request to one client **11(2)** of the clients **11(2)** to **11(*i*)** in which the network setting was already completed. Then, this network interface card awaits the request during a constant time t.

[**0123**] The network interface card **1** of the client **11(2)** learns that it is permitted to transmit the request, and transmits the request within a time t1 if it has any request. On the other hand, the network interface cards **1** of the clients **11(3)** to **11(*i*)** are not permitted to transmit the requests, and hence they do not transmit the requests. Accordingly, within this time t1, only the request from the client **11(2)** is received by the host **11(1)**.

[**0124**] Subsequently, the network interface card **1** of the host **11(1)** transmits the polling command for permitting the transmission of the request to the next one client **11(3)** and awaits the request during the time t1. Within this time t1, only the request from the client **11(3)** is received by the host.

[**0125**] In a like manner, the host sequentially transmits the polling commands to the clients **11(4)** to **11(*i*)** one by one and awaits their requests during the time t1. As a consequence, since the requests are transmitted one by one from the clients **11(2)** to **11(*i*)** and received by the host **11(1)**, the host can accurately receive the requests from those clients without being affected by an interference caused when the requests from a plurality of clients are received through the wireless LAN at the same time.

[**0126**] Data "Polling end" indicating that one cycle of calling the clients in which the network setting was completed was finished (indicating the end of the polling cycle) is added to the polling command which is to be transmitted to the last client **11(*i*)**. Then, after the host has awaited the request from the client **11(*i*)** during the time t1, the host is further placed in the standby mode during a constant time t2. If the request is not received by the host during this time t2, then the host immediately calls the next client (i.e., the host sequentially transmits the polling commands again to the clients **11(2)** to **11(*i*)** one by one and awaits the request during the time t1).

[**0127**] **FIG. 10A** shows formats of the polling command and the request signal. The polling command and the request signal contain an IP address of a transmission destination, an IP address of a transmission source, a value indicating bytes of the following signal, data or a command indicating the contents of the polling command and the request signal and a checksum, in that order.

[**0128**] **FIG. 10B** shows examples of the contents of the data or the command shown in **FIG. 10A**. The "Polling end" is data which is added to the polling command transmitted to the last client in order to indicate the end of the polling cycle.

[**0129**] A network interface card **1** of a client **11(*i*+1)** attached to the notebook size personal computer (of which the network setting was not yet executed) in somewhere of this polling cycle continues monitoring this polling command until the polling command with the data "Polling end" attached thereto is received (i.e., up to the end of the polling cycle) as shown in **FIG. 8** (steps **S21**, **S22**). Then, at the end of the polling cycle, after only the time t1 during which the client **11(*i*)** in **FIG. 9** is allowed to transmit the request signal has elapsed, the network setting request signal is transmitted to the host **11(1)** during the time t2 (when the request signal transmitted from the client **11(*i*)** is received within this time t1, the request signal may be transmitted to the host before the time t1 elapses) (step **S23**).

[**0130**] This network setting request signal is transmitted in accordance with the signal format shown in **FIG. 10A**. However, since the IP address is not given to the client **11(*i*+1)** from the host **11(1)**, the IP address of the transmission source is set to a dummy address which is determined by the network interface card **1** of the client **11(*i*+1)**, for example. In this network setting request signal, as shown in **FIG. 10**B, the contents of the data or the command are set to "Request IP address".

[**0131**] The network interface card **1** of the host **13(1)** awaits this network setting request at every time t2 after the end of the polling cycle in **FIG. 9** at the step **S13** shown in **FIG. 7**. Consequently, the client can accurately receive the network setting request without being affected by the interference caused when the request from the client in which the network setting was already completed and this network setting request are received simultaneously.

[**0132**] Then, if the host receives the network setting request within this time t2, then the polling system request receiving processing shown in **FIG. 9** is paused (step **S14**). Then, the IP address is given to the client **11(*i*+1)**, and as shown in **FIG. 9**, that IP address and the IP addresses of the host registered at the step **S12** and the DNS server are transmitted to the client **11(*i*+1)** as setting information for the network (step **S15**).

[**0133**] These IP addresses are transmitted in accordance with the signal format shown in **FIG. 10A**. The IP address of the transmission destination is set to a dummy address which is determined by the network interface card **1** of the aforementioned client **11(*i*+1)**.

[**0134**] As shown in **FIG. 8**, the client **11(*i*+1)** which has transmitted the network setting request signal awaits the reception of these IP addresses (step **S24**). Then, if these IP addresses are received, then the setting used to connect the client **11(*i*+1)** to the wireless LAN is executed by storing these IP addresses in the RAM **10** (step **S25**). Then, data indicating that the network setting was completed is transmitted through the wireless LAN (step **S26**). Then, control is vended.

[**0135**] The data indicating that the network setting was completed also is transmitted in accordance with the signal format shown in **FIG. 10A**. Then, the IP address of the transmission source is set to the IP address given from the host **11(1)**. In this data, as shown in **FIG. 10**B, the contents of the data or the command are set to a "Complete set IP Address".

[**0136**] As shown in **FIG. 7**, the network interface card **1** of the host **11(1)** awaits the reception of the data indicating that this network setting was completed (step **S16**). Then, when this data is received, the IP address given to the client **11(*i*+1)** is registered as a database (step **S17**).

[**0137**] Subsequently, the polling system request reception processing which was temporarily interrupted is resumed (step **S18**). In the resumed polling system request reception

processing, the clients **11(2)** to **11**(i+1) including the client **11**(i+1) in which the network setting was completed are called sequentially.

[**0138**] Then, referring back to the step **S13**, the host awaits the fact that another client executes the network setting. The processing shown in **FIG. 7** is executed until the network interface card **1** is ejected from the notebook size personal computer or the operating system of the notebook size personal computer is ended.

[**0139**] In the resumed polling system request reception processing, the clients **11(2)** to **11**(i+1) including the new client in which the network setting was completed are called sequentially.

[**0140**] In the stage in which the network setting of even one client is not yet completed, the network interface card **1** of the host **11(1)** does not receive the request signal in accordance with the polling system. Therefore, at that stage, while the network interface card **1** of the host **11(1)**, for example, is constantly awaiting the network setting request from the client at the step **S13** shown in **FIG. 7**, the network interface card **1** of the client transmits the network setting request at any time on condition that the host **11(1)** does not yet transmit the polling command.

[**0141**] By the processing shown in **FIGS. 7 and 8**, the network setting for connecting the respective clients **11(2)** to **11**(n) of **FIG. 5** to the wireless LAN is completed as an assumption that the participants are to attend the wireless LAN.

[**0142**] **FIG. 11** shows a function of any portion of the clients **11(2)** to **11**(n) used to execute this network setting. The device driver (microprogram stored within the flash ROM **9** shown in **FIG. 4**) for controlling the network interface card **1** contains the network setting function (the "host program" and the "client program"). The network setting of the clients **11(2)** to **11**(n) is executed by using the device driver function of this network interface card **1**.

[**0143**] Accordingly, as is clear from the contrast with **FIG. 1** which shows the conventional network interface card, the network setting can be carried out without using the operating system of the notebook size personal computer to which the network interface card **1** is attached.

[**0144**] **FIG. 12** shows a procedure of operations that should be executed by the participants of the conference in order to execute the network setting of the clients **11(2)** to **11**(n). When the network interface card **1** is attached to the notebook size personal computer and the operating system of the notebook size personal computer is activated (the network interface card **1** may be attached to the notebook size personal computer after the operating system of the notebook size personal computer has been activated), the network setting is automatically executed by the processings shown in **FIGS. 7 and 8**.

[**0145**] Accordingly, as is clear from the contrast with **FIG. 2** which shows the conventional network interface card, the network-setting of the clients **11(2)** to **11**(n) as the assumption that the participants are to attend the wireless LAN can be carried out without imposing a burden on the participants of the conference.

[**0146**] The "host program" and the "client program" respectively contain processings in which a presentation is executed by using presentation application software stored within the flash ROM **9**. The network interface card **1** of the host **11(1)** which has activated the "host program" immediately starts this processing after the network setting of any one client has been completed. The network interface card **1** of the clients **11(2)** to **11**(n) which have activated the "client program" also starts this processing after the respective network settings have been completed.

[**0147**] **FIGS. 13 and 14** show the contents of the processings at the "host program" and the "client program", respectively. As shown in **FIG. 13**, the network interface card **1** of the host **11(1)** enables the operating system of the notebook size personal computer of the host **11(1)** to recognize this network interface card **1** as a hard disk. At the same time, this network interface card sets an automatic activation file (step **S31**).

[**0148**] The Windows **95** and the Windows **98** have a function in which reapplication software stored within the hard disk can automatically be activated when the automatic activating file is set to the hard disk. Accordingly, the notebook size personal computer of the host **11(1)** recognizes the network interface card **1** as the hard disk based on the processing at this step **S31** so that the presentation application software stored within the flash ROM **9** is activated automatically.

[**0149**] The processing at this step **S31** may be the existing processing which is adopted by "MEMORY STICK", for example.

[**0150**] The coordinator of the conference can display the presentation data on the notebook size personal computer of the host **11(1)** by operating the notebook size personal computer of the host **11(1)** in accordance with the presentation application software which was activated automatically and can display the same presentation data on the projector **12** (**FIG. 5**) through the external display output terminal of the notebook size personal computer of the host **11(1)**.

[**0151**] Specifically, by using "Microsoft PowerPoint", for example, illustrations and the like reproduced from the hard disk and the floppy disk of the notebook size personal computer of the host **11(1)** and illustrations and the like transmitted from the server of the wire LAN can be displayed on the notebook size personal computer of the host **11(1)** and the projector **12**.

[**0152**] Images reproduced from the hard disk and the floppy disk of the notebook size personal computer of the host **11(1)** by using the graphic viewer, images transmitted from the server of the wire LAN and images picked up by the video camera **13** (**FIG. 5**) can be displayed on the notebook size personal computer of the host **11(1)** and the projector **12** shown in **FIG. 5** by using the graphic viewer.

[**0153**] Moreover, images and the like of the web page can be displayed on the notebook size personal computer of the host **11(1)** and the projector **12** shown in **FIG. 5** by accessing the WWW of the Internet through the wire LAN with the WWW browser.

[**0154**] As shown in **FIG. 14**, the network interface cards **1** of the clients **11(2)** to **11**(n) enable the notebook size personal computers of the clients **11(2)** to **11**(n) to recognize this network interface card **1** as a hard disk, respectively. At

the same time, the above network interface cards set the automatic activating file (step **S41**).

[**0155**] Accordingly, the notebook size personal computers of the clients **11(2)** to **11(*n*)** recognize the network interface card **1** as the hard disk so that the presentation application software stored in the flash ROM **9** may be activated automatically.

[**0156**] Other participants of the conference than the coordinator can display presentation data on the notebook size personal computers of the clients **11(2)** to **11(*n*)** by operating the notebook size personal computers of the clients **11(2)** to **11(*n*)** with this presentation application software, respectively.

[**0157**] As shown in **FIG. 13**, the network interface card **1** of the host **11(1)** awaits the operation in which the presentation data is displayed on the notebook size personal computer of the host **11(1)** by using the presentation application software (step **S32**).

[**0158**] Then, when that operation is carried out (i.e., the presentation data is displayed on the notebook size personal computer of the host **11(1)** and the projector **12**), the same presentation data is transmitted to the clients **11(2)** to **11(*n*)**, and a command for displaying the presentation data by using the presentation application software (e.g., graphic viewer in case of images) corresponding to that presentation data and a command for displaying that presentation data in synchronism with the host **11(1)**(page switching timing and the like are made coincident) are transmitted to the clients **11(2)** to **11(*n*)**.

[**0159**] As shown in **FIG. 14**, the network interface cards **1** of the clients **11(2)** to **11(*n*)** await the reception of this presentation data and the commands (step **S42**). Then, if the network interface cards receive the presentation data and the commands, then this presentation data is displayed on the notebook size personal computers of the clients **11(2)** to **11(*n*)** by using the presentation application software in accordance with this command, respectively (step **S43**).

[**0160**] Consequently, the same presentation data as that displayed on the projector **12** is also displayed on the notebook size personal computers of the clients **11(2)** to **11(*n*)**.

[**0161**] As shown in **FIG. 13**, while executing the steps **S32** and **S33**, the network interface card **1** of the host **11(1)** repeatedly determines whether or not a presentation right get request from any of the clients **11(2)** to **11(*n*)** is received (step **S34**). The request signals are transmitted and received in the polling system shown in **FIG. 9** in the processings shown in **FIGS. 13 and 14**.

[**0162**] As shown in **FIG. 14**, while executing the steps **S42** and **S43**, the network interface cards **1** of the clients **11(2)** to **11(*n*)** repeatedly determine whether or not the notebook size personal computers of the clients **11(2)** to **11(*n*)** execute the predetermined operation in order to get the presentation right (step **S44**). If this operation is executed, then the presentation right get request is transmitted to the host **11(1)** (step **S45**).

[**0163**] As shown in **FIG. 13**, if the presentation right get request from any of the clients **11(2)** to **11(*n*)** is received, then the network interface card **1** of the host **11(1)** transmits the presentation right get command to the corresponding client (step **S35**).

[**0164**] As shown in **FIG. 14**, after the network interface card **1** of the client which has transmitted the presentation right get request transmitted the presentation right get request, this network interface card **1** awaits that the presentation right get command is received (step **S46**).

[**0165**] When this command is received, the network interface card awaits that the notebook size personal computer of the client concerned displays presentation data by using the presentation application software (step **S47**).

[**0166**] If such operation is carried out (i.e., if the presentation data is displayed on the notebook size personal computer of the client concerned), then the same presentation data is transmitted to the host **11(1)** and other clients, and the command for displaying the presentation data by using the presentation application software corresponding to that presentation data and the command for displaying that presentation data in synchronism with the client concerned are transmitted to the host **11(1)** and other clients (step **S48**.

[**0167**] As shown in **FIG. 13**, it is determined by the network interface card **1** of the host **11(1)** whether the presentation data and the command are received (step **S36**). If they are received, then this presentation data is displayed on the notebook size personal computer of the host **11(1)** and the projector **12** by using the presentation application software (step **S37**). The network interface cards **1** of other clients display this presentation data at the steps **S42**, **S43** shown in **FIG. 14**.

[**0168**] As a result, the same presentation data as that displayed on the notebook size personal computer of the client who got the presentation right is displayed on the notebook size personal computers of the host **11(1)** and other clients and the projector **12**.

[**0169**] As shown in **FIG. 13**, while executing the steps **S36** and **S37**, the network interface card **1** of the host **11(1)** repeatedly determines whether or not the notebook size personal computer of the host **11(1)** executes a predetermined operation for returning the presentation right (step **S38**) and also repeatedly determines whether or not a new presentation right get request from other client is received (step **S39**).

[**0170**] Then, if the presentation return operation is executed, then a command for returning the presentation right is transmitted to the client which got the presentation right (step **S40**). Then, control goes back to the step **S32**.

[**0171**] If the presentation right get request from any one of other clients is received, then at a step **S35**, a new presentation right get command is transmitted to that client.

[**0172**] As shown in **FIG. 14**, while executing the steps **S47** and **S48** and transmitting the presentation data and the command, it is repeatedly determined by the network interface card **1** of the client which got the presentation right whether or not the presentation right return command or the command for enabling other client to get the presentation right is received (step **S49**). Then, if any command is received, then control goes back to the step **S42**.

[**0173**] Consequently, the presentation right is again transferred to the host **11(1)** or other client and the presentation data transmitted from the host **11(1)** or the client is displayed on the notebook size personal computers of the host **11(1)** and the clients **11(2)** to **11(*n*)** and the projector **12**.

[0174] The processings shown in **FIGS. 13 and 14** are continuously executed until the network interface card **1** is ejected from the notebook size personal computer or the operating system of the notebook size personal computer is ended.

[0175] By the processings shown in **FIGS. 13 and 14**, the same presentation data as that displayed on the projector **12** is displayed on the notebook size personal computers of the clients **11(2)** to **11(*n*)**. Moreover, the presentation data transmitted from the client (client which has got the presentation right) is displayed on the notebook size personal computers of other clients and the projector **12**.

[0176] Therefore, the participant on the seat distant from the projector can visually confirm the presentation data well by watching the screen of the notebook size personal computer of the client on hand. The participant on the seat which is not distant from the projector **12** is able to watch the presentation data from either the projector **12** or the notebook size personal computer of the client (e.g., the participant can watch the image through the projector **12** having the large-size screen and can also watch small illustrations through the notebook size personal computer of the client on hand).

[0177] Moreover, while being seated, the participant of the conference can obtain the presentation right by the client on hand and can transmit the presentation data. Therefore, the participant can make a presentation without leaving the seat.

[0178] The "host program" and the "client program" contain processings which are used to individually display data from the server of the wire LAN (**FIG. 5**) and data from the WWW server of the Internet on the notebook size personal computers of the individual clients **11(2)** to **11(*n*)**. The network interface cards **1** of the host **11(1)** and the clients **11(2)** to **11(*n*)** start these processings immediately after the presentation application software has automatically been activated in the presentation processings shown in **FIGS. 13, 14**.

[0179] **FIGS. 15 and 16** show the contents of these processings on the "host program" and the "client program", respectively. As shown in **FIG. 15**, it is determined by the network interface card **1** of the host **11(1)** whether or not the access request to the server of the wire LAN or the WWW server of the Internet are received from the individual clients **11(2)** to **11(*n*)** (step **S51**). The requests are transmitted and received in accordance with the polling system shown in **FIG. 7** in the processings shown in **FIGS. 15 and 16**.

[0180] As shown in **FIG. 16**, it is determined by the network interface cards **1** of the clients **11(2)** to **11(*n*)** whether or not the notebook size personal computers of the clients **11(2)** to **11(*n*)** concerned access the server of the wire LAN or the WWW server of the Internet (step **S61**). If this operation is executed, then the access request to this server is transmitted to the host **11(1)** (step **S62**).

[0181] As shown in **FIG. 15**, if the access request from the client is received, then the network interface card **1** of the host **11(1)** accesses the server (the server of the wire LAN or the WWW server of the Internet) in accordance with this access request, and transmits the data transmitted from this server to that client (step **S52**).

[0182] As a consequence, data of the server of the wire LAN or data of the WWW server of the Internet is individually displayed on the notebook size personal computer of that client.

[0183] If the presentation is now being executed by the processings shown in **FIGS. 13 and 14**, data of this server is transmitted to that client at the step **S52** instead of the presentation data that has been transmitted so far. Consequently, instead of the presentation data that has been displayed so far, data of this server (i.e., data different from the presentation data displayed on the notebook size personal computers of the host **11(1)** and other clients and the projector **12**) is displayed on the notebook size personal computer of that client.

[0184] While executing the step **S52**, it is repeatedly determined by the network interface card **1** of the host **11(1)** whether or not an access end request from that client is received (step **S53**), whether or not the new access request is received (step **S54**) and whether or not the presentation is now being executed and whether or not the display of new presentation data is changed (switching of page and the like) (step **S55**).

[0185] As shown in **FIG. 16**, after having transmitted the access request, it is repeatedly determined by the network interface cards **1** of the clients **11(2)** to **11(*n*)** whether or not the notebook size computers of the clients **11(2)** to **11(*n*)** concerned end the access (step **S63**) and whether or not they access a new server (step **S64**).

[0186] Then, if it is determined that the access end operation is executed, then the access end request is transmitted to the host **11(1)** (step **S65**), and control goes back to the step **S61**. If it is determined that the operation for accessing another server is executed, then control goes back to the step **S62**.

[0187] As shown in **FIG. 15**, if the access end request is received, then the network interface card **1** of the host **11(1)** ends the access of the server (step **S56**), and control goes back to the step **S51**. As a result, when the presentation is being executed, the presentation data is again displayed on the notebook size personal computer of that client.

[0188] If a new access request is received, then this time the server is accessed at the step **S52** in accordance with the access request, and data is transmitted to the client.

[0189] If the presentation is now being executed and the display of the new presentation data is changed, then the transmission of data from the server is interrupted during a constant time (step **S57**).

[0190] While the transmission of the data from the server is being interrupted at the step **S57**, the presentation data is transmitted to that client by the processings shown in **FIGS. 13 and 14**. Thus, each time the display of the presentation data is changed, the changed presentation data is displayed on the notebook size personal computer of the client, which displays data of the server of the wire LAN and data of the WWW server of the Internet, during a constant time.

[0191] The processings shown in **FIGS. 15 and 16** are continuously executed until the network interface card **1** is ejected from the notebook size personal computer or the operating system of the notebook size personal computer is ended.

[0192] Owing to the processings shown in **FIGS. 15 and 16**, when the participants of the conference want to examine data of the server of the wire LAN and data of the WWW server of the Internet before they make a presentation, they can examine the data of that server by the client on hand.

[0193] While the participant is examining data during other participant is making a presentation, since the changed presentation data is displayed during a constant time each time the display of the presentation data is altered, the presentation data can be prevented from being overlooked for a mistake.

[0194] As described above, in this wireless LAN conference system, since the card type network interface **1** is prepared at the conference hall and the clients are each comprised of the notebook size personal computers brought by the participants of the conference and this card type network interface **1**, the network of the clients can be set without imposing the burden upon the participants of the conference, and the system can be constructed without increasing the costs of equipment of the conference hall .unlike the case in which personal computers are installed at respective seats as equipment.

[0195] Moreover, since the host also is comprised of the same network conference terminal device as that of the client, an exclusive device need not be provided as the host, and hence the costs of equipment of the conference hall can be suppressed more.

[0196] In addition, since the presentation application software is stored in the network interface card **1**, even when the participant of the conference brings a notebook size personal computer in which the presentation application software is not installed, such notebook size personal computer also can display the presentation data.

[0197] Further, this presentation application software can be activated automatically. Accordingly, the participant of the conference need not execute operations to activate this presentation application software, and hence a burden imposed upon the participants can be alleviated more.

[0198] Since the host and the clients are connected by the wireless LAN, a wire transmission medium such as a coaxial cable and an optical fiber cable need not be laid over the conference hall, and hence the cost of equipment can be reduced from this viewpoint. Further, the position of the wireless LAN conference terminal device **11** within the conference hall is not fixed unlike the case in which the wire transmission medium is laid over (accordingly, the layout of seats is not fixed), and hence the layout of seats can be determined freely.

[0199] Moreover, the LAN conference system can be constructed without changing at all the wire LAN which is constructed in advance within a building in which a conference hall is prepared.

[0200] In the above example, the processing content of the "host/client decision program" is that the first wireless LAN conference terminal device **11** to which the network interface card **1** is attached and in which the operating system of the notebook size personal computer is activated in the conference hall as the host.

[0201] However, the processing content of the "host/client decision program" is not limited thereto and may be a processing content in which any one of the wireless LAN conference terminal devices **11** is determined as the host by a proper method (e.g., a picture for urging the participant to select the host or the client is displayed on the notebook size personal computer and the host or the client is determined in accordance with the operations of the notebook size personal computer).

[0202] While the projector is provided in the above example, as another example, the wireless LAN conference system may be constructed without providing the projector and presentation data may be displayed only on the notebook size personal computers of the host and the clients.

[0203] Since the projector is connected only to the host through the external display output terminal of the notebook size personal computer in the above example, when other participant than the coordinator of the conference makes a presentation, the host transmits presentation data, transmitted from the client to the host, to the projector.

[0204] However, as another example, as shown in **FIG. 17**, by using a projector that can be connected to the wireless LAN (e.g., projector with a personal computer, which can be connected to the wireless LAN, attached thereto) **14**, the presentation data may directly be transmitted to the projector **14** through the wireless LAN from the clients **11(2)** to **11(*n*)** (the host **11(1)** also may transmit the presentation data to the projector **14** through the wireless LAN) (in **FIG. 17**, parts common to those of **FIG. 5** are marked with the identical reference numerals and this relationship applies for the following **FIGS. 18, 19** as well).

[0205] In the above example, the host and the projector are provided as separate sections. However, as other example, as shown in **FIG. 18**, there may be provided a projector **16** with a personal computer **15** having a PC card slot attached thereto. The network interface card **1** may be attached to this personal computer **15** and this personal computer may be served as the host, whereby the projector may be served also as the host.

[0206] In the wireless LAN conference system shown in **FIG. 18**, the same presentation data as that displayed on the projector **16** is directly transmitted to the clients **11(2)** to **11(*n*)** from the projector **16** through the wireless LAN and thereby is displayed on the clients **11(2)** to **11(*n*)**. Similarly to the wireless LAN conference system shown in **FIG. 17**, presentation data may directly be transmitted to the projector **16** from the clients **11(2)** to **11(*n*)** through the wireless LAN and thereby such presentation data can be displayed on the projector **16**.

[0207] Further, in the example shown in **FIG. 18**, when the presentation data displayed on the projector **16** can be well watched from all seats and only one participant makes a presentation, as shown in **FIG. 19**, for example, there is provided only one wireless LAN conference terminal device (client) **11(2)**. Then, this wireless LAN conference terminal device **11**, the wire LAN and the video camera **13** may be connected together, whereby the participant which will make a presentation gets the presentation right by this client **11(2)** from beginning to end and may transmit the presentation data to the projector **16**.

[0208] In the above example, not only the "client program" but also the "host/client decision program" and the "host program" are stored in the network interface card,

whereby the notebook size personal computer with the network interface card attached thereto may be served as the host.

[0209] However, as other example, the "host/client decision program" and the "host program" may not be stored in the network interface card and the "client program" may constantly be activated based on the fact that the network interface card is attached to the notebook size personal computer. In that case, as the host, there may be used such one in which an ordinary (not relating to the present invention) network interface card is attached to the personal computer in which the "host program" and the presentation application software are installed (in the examples shown in **FIGS. 18 and 19**, the "host program" and the presentation application software may be installed on the personal computer attached to the projector and the ordinary network interface card may be attached to such personal computer).

[0210] In the above example, the "host program" and the "client program" contain the processing by which the client gets the presentation right. However, when the participant of the conference need not transmit the presentation data by the client in hand (e.g., announcement meeting in which a specific person makes a presentation in a one-sided fashion), "host program" and "client program" need not contain this processing.

[0211] In the above example, the presentation application software is stored in the network interface card. However, as other example, the presentation application software may not be stored in the network interface card, and the network interface card may be attached to the notebook size personal computer in which the presentation application software was installed.

[0212] In the above example, the network interface card is attached to the notebook size personal computer, thereby resulting in the client and the host being constructed. However, the present invention is not limited thereto, and the client and the host may be constructed by attaching the network interface card to suitable information terminal devices to which the PC card can be attached (other personal computers than the notebook size personal computer, personal digital assistants which are highly-sophisticated electronic notes, printers, image writing devices having a built-in camera, etc.).

[0213] In the above example, the network interface card adopts the radio frequency system as the wireless LAN system. However, as other example, an infrared system may be adopted as the wireless LAN system.

[0214] In the above example, the network interface card is applied to the wireless LAN conference system. However, the present invention is not limited thereto, and the network interface card may be applied to other uses than the wireless LAN conference system. However, in that case, the network interface card may transmit and receive data through the wire LAN.

[0215] In the above example, the present invention is applied to the network interface card which is based on the PCMCIA standards. However, the present invention is not limited thereto, and the present invention may be applied to proper card type (including thin-chip type) network interface cards which can be attached to the information terminal devices.

[0216] The present invention is not limited to the above examples and it is needless to say that the present invention may take various arrangements without departing from the gist thereof.

[0217] As described above, according to the card type network interface of the present invention, there is achieved the effect that the network setting for connecting the information terminal device such as the personal computer to the LAN can be executed without imposing a burden to users.

[0218] Accordingly, in the conference using the LAN, for example, if theses card type network interfaces are prepared in the conference hall and these card type network interfaces are attached to the information terminal devices such as the notebook size personal computers brought by the participants of the conference, then the network setting can be executed as the assumption that the participants are going to attend the conference without imposing a burden upon the participants. Moreover, the cost of equipment of the conference hall can be prevented from being increased unlike the case in which the information terminal devices such as the personal computers are attached to the respective seats as equipment.

[0219] According to this card type network interface, since the host of the LAN also is comprised of the information terminal device to which this card type network interface is attached, there is achieved the effect that the LAN system can be constructed without providing an exclusive-device as the host. Therefore, in the conference using the LAN, for example, the cost of equipment of the conference hall can be suppressed more.

[0220] According to this card type network interface, in the conference using the LAN, for example, the participant of the conference can make a presentation without leaving the seat.

[0221] According to this card type network interface, there are achieved effects that the host can accurately receive requests from a plurality of clients whose network settings were completed through the wireless LAN and that the host can accurately receive the setting information request through the wireless LAN.

[0222] According to this card type network interface, in the conference using the LAN, for example, there is achieved the effect in which the information terminal device in which the presentation application software is not installed can display the present application data. Moreover, since the participant of the conference need not execute operations to activate the presentation application software, there is achieved the effect in which a burden imposed upon the participants can be alleviated more.

[0223] Next, according to the network conference terminal device of the present invention, there are achieved the effects in which the network setting used as the assumption that the participants are going to attend the conference using the wireless LAN can be executed without imposing a burden upon the participants and in which the cost of equipment of the conference hall can be prevented from being increased unlike the case in which the information terminal devices are provided at the respective seats as equipment.

[0224] According to the network conference terminal device, since the host of the wireless LAN also is comprised

of this network conference terminal device, there is achieved the effect in which the wireless LAN conference system can be constructed without providing the exclusive-device as the host. Therefore, the cost of equipment of the conference hall can be suppressed more.

[0225] According to this network conference terminal device, in the conference using the wireless LAN, for example, the participant of the conference can make a presentation without leaving the seat.

[0226] According to this network conference terminal device, there are achieved effects in which the host can accurately receive requests from a plurality of clients whose network settings were completed and in which the host can accurately receive the setting information request to set the network.

[0227] According to this network conference terminal device, in the conference using the wireless LAN, for example, there is achieved the effect in which the information terminal device in which the presentation application software is not installed can display the presentation data. Moreover, since the participant of the conference need not execute operations to activate the presentation application software, there is achieved the effect in which a burden imposed upon the participants can be alleviated more.

[0228] Next, according to the network conference system of the present invention, there are achieved the effects in which the network setting can be executed without imposing a burden upon the participants and in which the system can be constructed without increasing the cost of equipment of the conference hall.

[0229] According to the network conference system, since the host also is comprised of the same network conference terminal device as that of the client, there is achieved the effect in which the exclusive-device need not be provided as the host so that the cost of equipment of the conference hall can be suppressed more.

[0230] According to this network conference system, the participant of the conference can make a presentation without leasing the seat.

[0231] According to this network conference system, there are achieved the effects in which the host can accurately receive requests from a plurality of clients in which the network setting was completed and in which the host can accurately receive the request of the setting information for setting the network.

[0232] According to this network conference system, there is achieved the effect in which the client or the host using the information terminal device in which the presentation application software is not installed can display the presentation data. Since the participant of the conference need not execute operations to activate the presentation application software, a burden imposed upon the participant can be suppressed more.

[0233] Next, according to another network conference system of the present invention, there are achieved the effects in which the network setting of the client can be executed without imposing a burden upon the participants of the conference, the system can be reconstructed without increasing the cost of equipment of the conference hall and in which the participant can make a presentation without leaving the seat.

[0234] According to another network conference system, there are achieved the effects in which the same presentation data as the presentation data displayed on the image display device can directly be transmitted from the image display device through the wireless LAN to the client and can be displayed on the client and in which the presentation data can directly be transmitted from the client through the wireless LAN to the image display device and such presentation data can be displayed on the image display device.

[0235] Further, according another network conference system, there are achieved the effects in which the image display device (host) can accurately receive the requests from a plurality of clients in which the network setting was completed and in which the image display device can accurately receive the setting information request to set the network.

[0236] Furthermore, according to another network conference system, there is achieved the effect in which the client using the information terminal device in which the present application software is not installed and the image display device can display the presentation data. Since the participant of the conference need not execute operations to activate the presentation application software, there is achieved the effect in which a burden imposed upon the participants can be alleviated more.

1. A card type network interface which can be attached to an information terminal device, comprising:

connecting means for connecting said information terminal device to a local area network; and

setting means for requesting a host of said local area network to transmit setting information necessary for executing a network setting to connect said information terminal device to said local area network based on the fact that said card type network interface can be attached to said information terminal device and executing said network setting by using said setting information transmitted from said host.

2. A card type network interface according to claim 1, further comprising:

determining means for determining based on the fact that said card type network interface can be attached to said information terminal device whether said information terminal device should be a host or a client of said local area network; and

processing means for transmitting said requested setting information to said client based on the fact that said information terminal device is determined as said host by said determining means, wherein said setting means requests said setting information based on the fact that said information terminal device is determined as said client by said determining means.

3. A card type network interface according to claim 1, wherein presentation application software for displaying and controlling presentation data is stored in said card type network interface.

4. A card type network interface according to claim 3, wherein said information terminal device automatically activates automatic activating application software stored in a hard disk and said card type network interface allows said information terminal device to recognize said card type

network interface as a hard disk so that said presentation application software is automatically activated in said information terminal device.

5. A card type network interface according to claim 2, wherein said determining means determines said information terminal device as said host based on the fact that said card type network interface is attached to said information terminal device on condition that a command for inhibiting said information terminal device from being determined as said host is not received through said local area network and transmits a command for inhibiting said other information terminal device from being determined as said host through said local area network.

6. A card type network interface according to claim 2, further comprising:

processing means for requesting said host to get a presentation right based on the fact that said information terminal device is determined as said client by said determining means, said network setting is completed by said setting means and a predetermined operation is executed by said information terminal device and transmitting presentation data to said host and said other client based on the fact that said presentation right is obtained; and

processing means for allowing said client to get said presentation right based on the fact that said information terminal device is determined as said host by said determining means and that said host is requested to get said presentation right.

7. A card type network interface according to claim 2, wherein said connecting means further includes processing means for connecting said information terminal device to a wireless local area network, receiving a request from said client in which said network setting was completed in a polling system based on the fact that said information terminal device is determined as said host by said determining means and awaiting a request of said setting information at the end of a polling cycle and wherein said setting means requests said setting information at the end of said polling cycle.

8. A card type network interface according to claim 2, wherein presentation application software for displaying and controlling presentation data is stored in said card type network interface.

9. A card type network interface according to claim 8, wherein said information terminal device automatically activates automatic activating application software stored in a hard disk and said card type network interface allows said information terminal device to recognize said card type network interface as a hard disk so that said presentation application software is automatically activated in said information terminal device.

10. A network conference terminal device in which a card type network interface is attached to an information terminal device and which includes presentation processing means for displaying and controlling presentation data according to the need, said card type network interface including:

connecting means for connecting said information terminal device to a wireless local area network; and

setting means for requesting a host of said wireless local area network to transmit setting information necessary for executing a network setting to connect said information terminal device to said wireless local area network based on the fact that said card type network interface is attached to said information terminal device and executing said network setting by using said setting information transmitted from said host.

11. A network conference terminal device according to claim 10, wherein said card type network interface further includes:

determining means for determining based on the fact that said card type network interface is attached to said information terminal device whether said information terminal device is served as a host or a client of said wireless local area network; and

processing means for transmitting said requested setting information to said client and transmitting said presentation data to said client in which said network setting was completed based on the fact that said information terminal device is determined as said host by said determining means and wherein said setting means requests said setting information based on the fact that said information terminal device is determined as said client by said determining means.

12. A network conference terminal device according to claim 10, wherein said presentation processing means displays said presentation data by executing presentation application software stored in said card type network interface.

13. A network conference terminal device according to claim 12, wherein said information terminal device automatically activates automatic activating application software stored in a hard disk and said card type network interface allows said information terminal device to recognize said card type network interface as a hard disk so that said presentation application software is automatically activated in said information terminal device.

14. A network conference terminal device according to claim 11, wherein said determining means determines said terminal device as said host and transmits a command for inhibiting said other terminal device from being determined as said host through said wireless local area network based on the fact that said network conference terminal is attached to said terminal device on condition that a command for inhibiting said terminal device from being determined as said host is not received through said wireless local area network.

15. A network conference terminal device according to claim 11, wherein said card type network interface further includes:

processing means for requesting said host to get a presentation right based on the fact that said terminal device is determined as said client by said determining means, said network setting is completed by said setting means and that a predetermined operation is executed by said terminal device and transmitting said presentation data to said host and said other client based on the fact that said presentation right is obtained; and

processing means for allowing said client to get said presentation right based on the fact that said terminal device is determined as said host and that said host is requested to get said presentation right.

16. A network conference terminal device according to claim 11, wherein said card type network interface further includes:

processing means for receiving in a polling system a request from said client in which said network setting was completed based on the fact that said terminal device is determined as said host by said determining means and awaiting a request of said setting information at the end of a polling cycle and wherein said setting means requests said setting information at the end of said polling cycle.

17. A network conference terminal device according to claim 11, wherein said presentation processing means displays said presentation data by executing presentation application software stored in said card type network interface.

18. A network conference terminal device according to claim 17, wherein said information terminal device automatically activates automatic activating application software stored in a hard disk and said card type network interface allows said information terminal device to recognize said card type network interface as a hard disk so that said presentation application software is automatically activated in said information terminal device.

19. A network conference system comprising:

a host of a wireless local area network;

a client of said wireless local area network, wherein said includes an information terminal device to which a card type network interface is attached and presentation processing means for displaying and controlling presentation data according to the need, said card type network interface includes connecting means for connecting said information terminal device to said wireless local area network and setting means for requesting said host to transmit setting information necessary for executing a network setting to connect said information terminal device to said wireless local area network based on the fact that said card type network interface is attached to said information terminal device and executing said network setting by using said setting information transmitted from said host and said host transmits said setting information to said client based on a request of said setting information and transmits said presentation data to said client in which said network setting was completed.

20. A network conference system according to claim 19, wherein said card type network interface further includes:

determining means for determining based on the fact that said card type network interface is attached to said information terminal device whether said information terminal device is served as a host or a client of said wireless local area network; and

processing means for transmitting said requested setting information to said client and transmitting said presentation data to said client in which said network setting was completed based on the fact that said information terminal device is determined as said host by said determining means and wherein said setting means requests said setting information based on the fact that said information terminal device is determined as said client by said determining means and said host is such one that an information terminal device to which said card type network interface is attached is determined as a host by said determining means.

21. A network conference system according to claim 19, wherein said presentation processing means displays said presentation data by executing presentation application software stored in said card type network interface.

22. A network conference system according to claim 21, wherein said information terminal device automatically activates automatic activating application software stored in a hard disk and said card type network interface allows said information terminal device to recognize said card type network interface as a hard disk so that said presentation application software is automatically activated in said information terminal device.

23. A network conference system according to claim 20, wherein said determining means determines said information terminal device as said host and transmits a command for inhibiting said other information terminal device from being determined as said host through said wireless local area network based on the fact that said card type network interface is attached to said information terminal device on condition that a command for inhibiting said information terminal device from being determined as said host is not received through said wireless local area network.

24. A network conference system according to claim 20, wherein said card type network interface further includes:

processing means for requesting said host to get a presentation right based on the fact that said card type network interface is determined as said client by said determining means, said network setting is completed by said setting means and that a predetermined operation is executed by said information terminal device and transmitting said presentation data to said host and said other client based on the fact that said presentation right is obtained; and

processing means for allowing said client to get said presentation right based on the fact that said card type network interface is determined as said host by said determining means and that said host is requested to get said presentation right.

25. A network conference system according to claim 20, wherein said card type network interface further includes processing means for receiving in a polling system a request from said client in which said network setting was completed based on the fact that said card type network interface is determined as said host by said determining means and awaiting a request of said setting information at the end of a polling cycle and wherein said setting means requests said setting information at the end of said polling cycle.

26. A network conference system according to claim 20, wherein said presentation processing means displays said presentation data by executing presentation application software stored in said card network interface.

27. A network conference system according to claim 26, wherein said terminal device automatically activates automatic activating application software stored in a hard disk and said card type network interface allows said terminal device to recognize said card type network interface as a hard disk so that said presentation application software is automatically activated in said terminal device.

28. A network conference system comprising an image display device and a client of a wireless local area network, wherein said image display device has an information terminal device to which a card type network interface can be attached, said information terminal device has said card type network interface attached thereto and includes a presentation processing means for displaying and controlling presentation data;

said client is constructed such that said card type network interface is attached to an information terminal device and includes said presentation processing means according to the need;

said card type network interface comprising:

connecting means for connecting said information terminal device to said wireless local area network;

determining means for determining based on the fact that said card type network interface is attached to said information terminal device whether said information terminal device is served as a host or a client of said wireless local area network;

setting means for requesting said host to transmit setting information necessary for executing a network setting to connect said information terminal device to said wireless local area network based on the fact that said information terminal device is determined as said client by said determining means and executes said network setting by using said setting information transmitted from said host;

processing means for transmitting said requested setting information to said client based on the fact that said information terminal device is determined as said host by said determining means and transmitting said presentation data to said client in which said network setting was completed;

processing means for requesting said host to get a presentation right based on the fact that said information terminal device is determined as said client by said determining means, said network setting was completed by said setting means and that a predetermined operation is executed by said information terminal device and transmitting said presentation data to said host and said client based on the fact that said presentation right is obtained; and

processing means for allowing said client to get said presentation right based on the fact that said information terminal device is determined as said host by said determining means and that said host is requested to get said presentation right, and said image display device is constructed such that said information terminal device attached to said image display device is determined as a host by said determining means.

29. A network conference system according to claim 28, wherein said determining means determines said terminal device as said host based on the fact that said card type network interface is attached to said terminal device on condition that a command for inhibiting said information terminal device from being determined as said host is not received through said wireless local area network and transmits a command for inhibiting said other information terminal device from being determined as said host through said wireless local area network.

30. A network conference system according to claim 28, wherein said card type network interface further includes processing means for receiving in a polling system a request from said client in which said network setting was completed based on the fact that said information terminal device is determined as said host by said determining means and awaiting a request of said setting information at the end of a polling cycle and wherein said setting means requests said setting information at the end of said polling cycle.

31. A network conference system according to claim 28, wherein said presentation processing means displays said presentation data by executing presentation application software stored in said card type network interface.

32. A network conference system according to claim **31**, wherein said terminal device automatically activates automatic activating application software stored in a hard disk and said card type network interface allows said terminal device to recognize said card type network interface as a hard disk so that said presentation application software is automatically activated in said terminal device.

* * * * *