UNITED STATES PATENT AND TRADEMARK OFFICE

BEFORE THE PATENT TRIAL AND APPEAL BOARD

YEALINK (USA) NETWORK TECHNOLOGY CO., LTD., and
YEALINK NETWORK TECHNOLOGY CO., LTD.
Petitioners,

v.

BARCO N.V.
Patent Owner

U.S. Patent No. 11,258,676
IPR2024-1438

DECLARATION OF KEVIN C. ALMEROTH, PH.D.,
IN SUPPORT OF PETITION FOR *INTER PARTES* REVIEW
OF U.S. PATENT NO. 11,258,676

YEALINK EXHIBIT 1002

BARCO EXHIBIT 2027
Yealink v. Barco
IPR2024-01437

I. INTRODUCTION 5
II. QUALIFICATIONS / PROFESSIONAL BACKGROUND 6
III. MATERIALS REVIEWED 18
IV. LEVEL OF ORDINARY SKILL IN THE ART 22
V. BACKGROUND OF THE TECHNOLOGY 23
A. Forcing Rule 36
VI. OVERVIEW OF THE ’676 PATENT 50
A. Prior Art Techniques Acknowledged by the ’676 Patent 50
B. The Purported Invention 54
C. Prosecution History 57
VII. CLAIM CONSTRUCTION 58
A. “means for communication” (claim 1) 60
B. “arbitrary media content” (claim 16) 61
C. “coupled” (claims 14, 16) 61
D. “wireless communications network” (claims 1, 4, 16) 62
E. “setting up, by means of the pre-installed generic driver” (claim 1, 5) 62
F. “screen scraped data” (claim 1, 14) 63
VIII. OVERVIEW OF THE PRIOR ART 64
A. Ono (EX-1005) 64
B. Uchida (EX-1009) 66
C. Kaplan (EX-1027) 68
D. Deforche (EX-1030) 70
E. Hill ’557 (EX-1013) 71
F. Banerjee (EX-1021) 73
G. Corbett (EX-1007) 74
H. Grimshaw (EX-1008) 75
1. Overview of Grimshaw (EX-1008) 75
2. Grimshaw’s Claim 1 Support in Provisional Application No. 61/255,326 (EX-1012) 77
IX. THE PRIOR ART DISCLOSES AND/OR SUGGESTS THE RECITED FEATURES OF CLAIMS 1– OF THE ’676 PATENT 80
A. Ground I – Ono and Deforche Disclose and/or Suggest the Features of 1, 5, 8, 18 and 20 80
1. Rationale to combine 80

2. Claim 1 81
3. Claim 5: The method of claim 1, wherein step b) is selected from: 108
4. Claim 8: The method of claim 1, wherein the transferring of the data for display is to a defined network node without user entry of configuration details 109
5. Claim 18: The method according to claim 1, wherein running said program does not require installation of the program or configuration of the processing device. 110
6. Claim 20: The method according to claim 1, further comprising a program adapted to be loaded onto the processing device and to run on an operating system of the processing device, said program being adapted to obtain the media content from the processing device, running said program on the processing device does not require installation of the program or configuration of the processing device. 111

B. Ground II – Ono Discloses and/or Suggests all the Features of Claim 14 111

1. Rationale to combine 111
2. Claim 14 112

C. Ground III – Ono, Deforche, and Grimshaw Disclose and/or Suggest the Features of Claims 4, 16 and 19 121

1. Rationale to combine 121
2. Claim 4: The method of claim 1, wherein the peripheral device has an actuator, the method further comprising a user action on the actuator that triggers transfer of the data for display from the processing device to the wireless transceiver and from there to the wireless communications network. 122
3. Claim 16 125
4. Claim 19: running said program does not require installation of the program or configuration of the processing device 144

D. Ground IV – Uchida, Deforche, and Grimshaw Disclose and/or Suggest the Features of Claims 1, 4-5, 8, 16, and 18-20 145

1. Rationale to combine 145
2. Claim 1 146
3. Claim 4: The method of claim 1, wherein the peripheral device has an actuator, the method further comprising a user action on the actuator that triggers transfer of the data for display from the processing device to the wireless transceiver and from there to the wireless communications network 166
4. Claim 5: The method of claim 1, wherein step b) is selected from: 167
5. Claim 8: transferring of the data for display is to a defined network node without user entry of configuration details 168
6. Claim 16 168
7. Claim 18: The method according to claim 1, wherein running said program does not require installation of the program or configuration of the processing device 178
8. Claim 19: running said program does not require installation of the program or configuration of the processing device 178
9. Claim 20: The method according to claim 1, further comprising a program adapted to be loaded onto the processing device and to run on an operating system

of the processing device, said program being adapted to obtain the media content from the processing device, running said program on the processing device does not require installation of the program or configuration of the processing device. 179

E. Ground IV – Uchida and Grimshaw Disclose and/or Suggest the Features of Claim 14 179

1. Rationale to combine 179
2. Claim 14..... 179

X. CONCLUSION..... 185

I, Kevin C. Almeroth Ph.D., declare as follows:

I. INTRODUCTION

1. I have been retained by Yealink (USA) Network Technology Co., Ltd., and Yealink Network Technology Co., Ltd. ("Petitioners") as an independent expert consultant in this proceeding before the United States Patent and Trademark Office ("PTO") regarding U.S. Patent No. 11,258,676 ("the '676 patent") (EX-1001).

2. My name is Kevin C. Almeroth and I am a Professor Emeritus of Computer Science at the University of California, Santa Barbara. I have prepared this declaration as an expert witness on behalf of Petitioners. In this declaration, I will give my opinion as to whether claims 1, 4, 5, 8, 14, 16, 18–19 of the '676 patent are unpatentable. I also provide herein the technical bases for these opinions, as appropriate.

3. For my efforts in connection with the preparation of this declaration, I have been compensated at my usual and customary rate for this type of consulting activity. My compensation is in no way contingent on the outcome of these or any other proceedings.

4. I have been asked to consider whether certain references disclose or suggest the features recited in claims 1, 4, 5, 8, 14, 16, 18-19 of the '676 patent. My opinions are set forth below.

II. QUALIFICATIONS / PROFESSIONAL BACKGROUND

5. I am currently a Professor Emeritus in the Department of Computer Science at the University of California, Santa Barbara (UCSB). All of my opinions stated in this declaration are based on my own personal knowledge and professional judgment. In forming my opinions, I have relied on my knowledge and experience in designing, developing, researching, and teaching regarding computer networks and protocols, wireless networking, multicast communication, large-scale multimedia systems, and mobile applications.

6. I am over 18 years of age and, if I am called upon to do so, I would be competent to testify as to the matters set forth herein. I understand that a copy of my current curriculum vitae, which details my education and professional and academic experience, is being submitted by Petitioner as Exhibit 1003. The following provides an overview of some of my experience that is relevant to the matters set forth in this declaration.

7. While at UCSB, I have held faculty appointments and was a founding member of the Computer Engineering (CE) Program, Media Arts and Technology (MAT) Program, and the Technology Management Program (TMP). I have also served as the Associate Director of the Center for Information Technology and Society (CITS) from 1999 to 2012. I have been a faculty member at UCSB since July 1997.

8. I hold three degrees from the Georgia Institute of Technology: (1) a Bachelor of Science degree in Information and Computer Science (with minors in Economics, Technical Communication, and American Literature) earned in June 1992; (2) a Master of Science degree in Computer Science (with specialization in Networking and Systems) earned in June 1994; and (3) a Doctor of Philosophy (Ph.D.) degree in Computer Science (Dissertation Title: Networking and System Support for the Efficient, Scalable Delivery of Services in Interactive Multimedia System, minor in Telecommunications Public Policy) earned in June 1997. During my education, I took a wide variety of courses as demonstrated by my minors. My undergraduate degree also included a number of courses more typical of a degree in electrical engineering including digital logic, signal processing, and telecommunications theory.

9. One of the major concentrations of my research over the past 30+ years has been the delivery of multimedia content and data between computing devices, including through various network architectures. In my research, I have studied large-scale content delivery systems, and the use of servers located in a variety of geographic locations to provide scalable delivery to hundreds or thousands of users simultaneously. I have also studied smaller-scale content delivery systems in which content is exchanged between individual computers and portable devices. My work has emphasized the exchange of content more efficiently across computer networks,

including the scalable delivery of content to many users, mobile computing, satellite networking, delivering content to mobile devices, and network support for data delivery in wireless networks.

10. In 1992, the initial focus of my research was on the provision of interactive functions (e.g., VCR-style functions like pause, rewind, and fast-forward) for near video-on-demand systems in cable systems; in particular, how to aggregate requests for movies at a cable head-end and then how to satisfy a multitude of requests using one audio/video stream broadcast to multiple receivers simultaneously. This research has continually evolved and resulted in the development of techniques to scale the delivery of on-demand content, including audio, video, web documents, and other types of data, through the Internet and over other types of networks, including over cable systems, broadband telephone lines, and satellite links.

11. An important component of my research has been investigating the challenges of communicating multimedia content, including video, between computers and across networks including the Internet. Although the early Internet was used mostly for text-based, non-real time applications, the interest in sharing multimedia content, such as video, quickly developed. Multimedia-based applications ranged from downloading content to a device to streaming multimedia content to be instantly used. One of the challenges was that multimedia content is

typically larger than text-only content, but there are also opportunities to use different delivery techniques since multimedia content is more resilient to errors. I have worked on a variety of research problems and used a number of systems that were developed to deliver multimedia content to users. One content-delivery method I have researched is the one-to-many communication facility called "multicast," first deployed as the Multicast Backbone, a virtual overlay network supporting one-to-many communication. Multicasting is one technique that can be used on the Internet to provide streaming media support for complex applications like video-on-demand, distance learning, distributed collaboration, distributed games, and large-scale wireless communication. The delivery of media through multicasting often involves using Internet infrastructure, devices and protocols, including protocols for routing and TCP/IP.

12. Starting in 1997, I worked on a project to integrate the streaming media capabilities of the Internet together with the interactivity of the web. I developed a project called the Interactive Multimedia Jukebox (IMJ). Users would visit a web page and select content to view. The content would then be scheduled on one of a number of channels, including delivery to students in Georgia Tech dorms delivered via the campus cable plant. The content of each channel was delivered using multicast communication.

13. In the IMJ, the number of channels varied depending on the capabilities of the server including the available bandwidth of its connection to the Internet. If one of the channels was idle, the requesting user would be able to watch their selection immediately. If all channels were streaming previously selected content, the user's selection would be queued on the channel with the shortest wait time. In the meantime, the user would see what content was currently playing on other channels, and because of the use of multicast, would be able to join one of the existing channels and watch the content at the point it was currently being transmitted.

14. The IMJ service combined the interactivity of the web with the streaming capabilities of the Internet to create a jukebox-like service. It supported true Video-on-Demand when capacity allowed, but scaled to any number of users based on queuing requested programs. As part of the project, we obtained permission from Turner Broadcasting to transmit cartoons and other short-subject content. We also connected the IMJ into the Georgia Tech campus cable television network so that students in their dorms could use the web to request content and then view that content on one of the campus's public access channels.

15. More recently, I have also studied issues concerning how users choose content, especially when considering the price of that content. My research has examined how dynamic content pricing can be used to control system load. By

raising prices when systems start to become overloaded (*i.e.*, when all available resources are fully utilized) and reducing prices when system capacity is readily available, users' capacity to pay as well as their willingness can be used as factors in stabilizing the response time of a system. This capability is particularly useful in systems where content is downloaded or streamed on-demand to users.

16. As a parallel research theme, starting in 1997, I began researching issues related to wireless devices and sensors. In particular, I was interested in showing how to provide greater communication capability to "lightweight devices," *i.e.*, small form-factor, resource-constrained (*e.g.*, CPU, memory, networking, and power) devices. Starting in 1998, I published several papers on my work to develop a flexible, lightweight, battery-aware network protocol stack. The lightweight protocols we envisioned were similar in nature to protocols like Bluetooth, Universal Plug and Play (UPnP) and Digital Living Network Alliance (DLNA).

17. From this initial work, I have made wireless networking—including ad hoc, mesh networks and wireless devices—one of the major themes of my research. My work in wireless networks spans the protocol stack from applications through to the encoding and exchange of data at the data link and physical layers.

18. At the application layer, even before the large-scale "app stores" were available, my research looked at building, installing, and using apps for a variety of purposes, from network monitoring to support for traditional computer-based

applications (*e.g.*, content retrieval) to new applications enabled by ubiquitous, mobile devices. For example, my research has looked at developing applications for virtually exchanging and tracking "coupons" through "opportunistic contact" among mobile wireless devices (*i.e.*, communication among devices moving into communication range with each other). In many of the courses I have taught there is a project component. Through these projects I have supervised numerous efforts to develop new "apps" for download and use across a variety of mobile platforms.

19. Toward the middle of the protocol stack, my research has also looked to build wireless infrastructure support to enable communication among a set of mobile devices unaided by any other kind of network infrastructure. These kinds of networks are useful either in challenged network environments (e.g., when a natural disaster has destroyed existing infrastructure) or when suitable support for network communication never existed. The deployment of such networks (or even the use of traditional network support) are critical to support services like disaster relief, catastrophic event coordination, and emergency services deployment.

20. Yet another theme of my research has been monitoring wireless networks, in particular different variants of IEEE 802.11 compliant networks, to (1) understand the operation of the various protocols used in real-world deployments, (2) use these measurements to characterize use of the networks and identify protocol limitations and weaknesses, and (3) propose and evaluate solutions to these

problems. I have successfully used monitoring techniques to study wireless data link layer protocol operation and to improve performance by enhancing the operation of such protocols. For wireless protocols, this research includes functions like network acquisition and channel bonding.

21. One theme in my wireless network research has been cross-layer solutions and innovations. As mentioned above, with greater wireless device use and network support, we envisioned new application paradigms and services, for example, when mobile devices come into contact with each other. Instead of relying on existing infrastructure to relay communication, mobile devices are able to discover each other and communicate directly. Other examples include discovering and using location information to enhance users' experiences. Network support and novel applications span the use of a variety of network architectures supporting users on foot, in vehicles, and across varying terrains and environments. Finally, we studied how communication efficiency can be supported through intelligent handoffs as well as location and movement prediction.

22. Protecting networks, including their operation and content, has been an underlying theme of my research almost since the beginning of my research career. Since 2000, I have been involved in several projects that specifically address security, network protection, and firewalls. After significant background work, a team on which I was a member successfully submitted a $4.3M grant proposal to the

Army Research Office (ARO) at the Department of Defense to propose and develop a high-speed intrusion detection system. Key aspects of the system included associating streams of packets and analyzing them for viruses and other malware. Once the grant was awarded, we spent several years developing and meeting the milestones of the project. Several of my students worked on related projects and published papers on topics ranging from intrusion detection to developing advanced techniques to be incorporated into firewalls. I have also used firewalls, including their associated malware detection features, in developing techniques for the classroom to ensure that students are not distracted by online content.

23. My recent work ties some of the various threads of my past research together. I have investigated content delivery in online social networks and proposed reputation management systems in large-scale social networks and marketplaces. On the content delivery side, I have looked at issues of caching and cache placement, especially when content is shared and the cache has geographical relevance. We were able to show that effective caching strategies can greatly improve performance and reduce deployment costs.

24. As an important component of my research program, I have been involved in the development of academic research into available technology in the marketplace. One aspect of this work is my involvement in the Internet Engineering Task Force (IETF). The IETF is a large and open international community of

network designers, operators, vendors, and researchers concerned with the evolution of Internet architecture and the smooth operation of the Internet. I have been involved in various IETF groups including content delivery-related working groups like the Audio Video Transport (AVT) group, the MBone Deployment (MBONED) group, Source Specific Multicast (SSM) group, the Inter-Domain Multicast Routing (IDMR) group, the Reliable Multicast Transport (RMT) group, the Protocol Independent Multicast (PIM) group, etc. I have also served as a member of the Multicast Directorate (MADDOGS), which oversaw the standardization of all things related to multicast in the IETF. Finally, I was the Chair of the Internet2 Multicast Working Group for seven years.

25. My involvement in the research community extends to leadership positions for several academic journals and conferences. I am the co-chair of the Steering Committee for the ACM Network and System Support for Digital Audio and Video (NOSSDAV) workshop and on the Steering Committees for the International Conference on Network Protocols (ICNP), ACM Sigcomm Workshop on Challenged Networks (CHANTS), and IEEE Global Internet (GI) Symposium. I have served or am serving on the Editorial Boards of IEEE/ACM Transactions on Networking, IEEE Transactions on Mobile Computing, IEEE Network, ACM Computers in Entertainment, AACE Journal of Interactive Learning Research (JILR), and ACM Computer Communications Review. I have co-chaired a number

of conferences and workshops including the IEEE International Conference on Network Protocols (ICNP), IEEE Conference on Sensor, Mesh and Ad Hoc Communications and Networks (SECON), International Conference on Communication Systems and Networks (COMSNETS), IFIP/IEEE International Conference on Management of Multimedia Networks and Services (MMNS), the International Workshop On Wireless Network Measurement (WiNMee), ACM Sigcomm Workshop on Challenged Networks (CHANTS), the Network Group Communication (NGC) workshop, and the Global Internet Symposium, and I have served on the program committees for numerous conferences.

26. Furthermore, in the courses I taught at UCSB, a significant portion of my curriculum covered aspects of the Internet and network communication including the physical and data link layers of the Open System Interconnect (OSI) protocol stack, and standardized protocols for communicating across a variety of physical media such as cable systems, telephone lines, wireless, and high-speed Local Area Networks (LANs). The courses I have taught also cover most major topics in Internet communication, including data communication, multimedia encoding, and mobile application design. My research and courses have covered a range of physical infrastructures for delivering content over networks, including cable, Integrated Services Digital Network (ISDN), Ethernet, Asynchronous

Transfer Mode (ATM), fiber, and Digital Subscriber Line (DSL). For a complete list of courses I have taught, see my curriculum vitae (CV) (EX-1003).

27. In addition, I co-founded a technology company called Santa Barbara Labs that was working under a sub-contract from the U.S. Air Force to develop very accurate emulation systems for the military's next generation internetwork. Santa Barbara Labs' focus was in developing an emulation platform to test the performance characteristics of the network architecture in the variety of environments in which it was expected to operate, and, in particular, for network services including IPv6, multicast, Quality of Service (QoS), satellite-based communication, and security. Applications for this emulation program included communication of a variety of multimedia-based services, including video conferencing and video-on-demand.

28. In addition to having co-founded a technology company myself, I have worked for, consulted with, and collaborated with companies for nearly 30 years. These companies range from well-established companies to start-ups and include IBM, Hitachi Telecom, Turner Broadcasting System (TBS), Bell South, Digital Fountain, RealNetworks, Intel Research, Cisco Systems, and Lockheed Martin.

29. Through my graduate education, leadership with CITS, involvement in TMP, role in the development of the Internet2 infrastructure, and consulting with ISPs, I have gained a strong understanding in the role of the Internet in our society

and the challenges of deploying large-scale production networking infrastructure. CITS, since its inception, has looked at the role of the Internet in society, including how the evolution of technology have created communication opportunities and challenges, including, for example through disruptive technologies like P2P. TMP looks to focus on non-purely technical issues, including, for example, state-of-the-art business methods, strategies for successful technology commercialization, new venture creation, and best practices for fostering innovation. Through my industry collaborations and Internet2 work, I have developed significant experience in the challenges of deploying, monitoring, managing, and scaling communication infrastructure to support evolving Internet services like streaming media, conferencing, content exchange, social networking, and e-commerce.

30. I am a Member of the Association of Computing Machinery (ACM) and a Fellow of the Institute of Electrical and Electronics Engineers (IEEE).

III. MATERIALS REVIEWED

31. The opinions contained in this Declaration are based on the documents I reviewed, my professional judgment, as well as my education, experience, and knowledge regarding, for example, electronic meeting tools, methods of displaying media content, audiovisual display systems, wireless network communication, user interfaces, plug-and-play architectures, and video conferencing applications.

32. In forming my opinions expressed in this Declaration, I reviewed the following materials and information:

EXHIBIT	DESCRIPTION
EX-1001	U.S. Patent No. 11,258,676
EX-1003	Curriculum Vitae of Kevin C. Almeroth, Ph.D.
EX-1004	File History of U.S. Patent No. 11,258,676
EX-1005	U.S. Patent Application Publication No. 2005/0210390 ("Ono")
EX-1006	U.S. Patent Application Publication No. 2008/0074560 ("Ichieda")
EX-1007	U.S. Patent Application Publication No. 2006/0069840 ("Corbett")
EX-1008	U.S. Patent Application Publication No. 2011/0096138 ("Grimshaw")
EX-1009	English Translation of Japanese Patent Application Publication No. 2008-165007 ("Uchida")
EX-1010	Japanese Patent Application Publication No. 2008-165007
EX-1011	Certification for English Translation of Japanese Patent Application Publication No. 2008-165007
EX-1012	U.S. Provisional Application No. 61/255,326 ("Grimshaw Provisional")
EX-1013	WIPO International Patent Application Publication No. 2010/025557 ("Hill 557")
EX1014-EX-1019	**RESERVED**
EX-1020	U.S. Patent Application Publication No. 2010/0087139 ("Glass")
EX-1021	U.S. Patent Application Publication No. 2009/0198839 ("Banerjee")

EX-1022	U.S. Patent Application Publication No. 2011/0115689 (“Sugiyama”)
EX-1023-EX-1025	**RESERVED**
EX-1026	U.S. Patent Application Publication No. 2009/0172219 (“Mardiks”)
EX-1027	U.S. Patent Application Publication No. 2010/0295994 (“Kaplan”)
EX-1028-Ex-1029	**RESERVED**
EX-1030	EP Patent Application Publication No. 2107463 (“Deforche”)
EX-1031	JP Patent Application Publication No. 2007-208606 (“Maeda”)
EX-1032	**RESERVED**
EX-1033	U.S. Patent Application Publication No. 2002/0196378 (“Slobodin”)
EX-1034	U.S. Patent Application Publication No. 2002/0174254 (“Kita”)
EX-1035-EX-1049	**RESERVED**
EX-1050	Imation Wireless Projection Link User Guide
EX-1051	EZAir Press Release, “EZAir Wireless PC to TV Solutions Now Available Across Europe,” March 16, 2011
EX-1052	Warpia Product Brief, “Wireless USB PC to TV Audio/Video Display Adapter,” 2009
EX-1053	Q-Waves Product Overview, “Quicklink TV,” November 2010
EX-1054	IOGear Installation Guide, “Wireless USB to VGA Kit,” 2008
EX-1055	JP Patent Application Publication No. 2007-208606
EX-1056	Certification for English Translation of JP Patent Application Publication No. 2007-208606

EX-1057	U.S. Patent Application Publication No. 2005/0036509 ("Acharya")
EX-1058	U.S. Patent Application Publication No. 2011/0038005 ("Ochai")
EX-1059-EX-1065	**RESERVED**
EX-1066	Portion of ctrl. No. 90/014,087 file history

33. I also reviewed any other materials I refer to in this Declaration in support of my opinions.

34. My opinions contained in this declaration are based on the documents I reviewed and my knowledge and professional judgment. My opinions have also been guided by my appreciation of how a person of ordinary skill in the art ("POSITA") would have understood the state of the art, the teachings of the prior art, and the claim terms and the specification of the '676 patent at the time of the alleged invention. My opinions reflect how a person having ordinary skill in the art (which I have described below) would have understood the '676 patent, the prior art, the knowledge of a POSITA and the state of the art at the time of the alleged invention. I have been asked to initially consider that the time of the alleged invention of the '676 patent is around September 14, 2011 (the earliest date to which the '676 patent claims the benefit of priority). However, even if a modestly earlier or later date were selected it would not alter my opinions.

35. Based on my experience and expertise, it is my opinion that the prior art discloses and/or suggests all the features recited in challenged claims 1, 4, 5, 8, 14, 16, 18-19 of the ’676 patent, as I discuss in detail below.

IV. LEVEL OF ORDINARY SKILL IN THE ART

36. In determining the skills of a hypothetical POSITA of the ’676 patent at the time of the claimed invention, I considered several things, including various prior art techniques for screen scraping, wireless transmission of media content, wireless networking, user input/control, and peripheral device interfaces. I also considered the type of problems that such techniques gave rise to and the rapidity with which innovations were made. I also considered the sophistication of the technologies involved and the educational background and experience of those actively working in the field.

37. For the purposes of my analysis, I have been asked to assume that a POSITA in the field of art of the ’676 patent would have had at least a Master’s Degree in Electrical Engineering with at least five years of work experience in computer science and embedded systems, or a Master’s Degree in Computer Science with at least five years of work experience in electrical and computer engineering and embedded systems. Additional educational experience could substitute for some of the work experience. My opinions below have taken that into account and reflect

that level of skill in determining the content of the prior art and what it would have suggested to a POSITA.

V. BACKGROUND OF THE TECHNOLOGY

38. At the time of the alleged invention, media sharing between electronic devices was well established and used in an increasing variety of applications to share media data between devices. In the decades before the alleged invention, a wide array of electronic tools were developed to facilitate meetings and share content among individuals, particularly in business and educational settings. As acknowledged by the ’676 patent, there has been “an explosion” of such tools by the time of the alleged invention. (EX-1001, 1:32-43) By the 2000s, there was already “widespread acceptance of using computers to facilitate group communications.” (EX-1033, ¶0004.)

39. The oldest solutions involved wired connections between electronic devices. As wireless networking techniques became more common, wireless applications to electronic tools became prevalent. Indeed, by the time of the alleged invention in 2011, acknowledged by the ’676 patent and discussed in more detail below, wireless networks were commonplace and widespread from classrooms to boardrooms.

40. Wireless media sharing arose, in part, from the recognition that sharing media content from one device to one or more separate devices (in settings such as

a meeting, presentation, *etc*.) using physical cable connections presented certain physical limitations. For example, one limitation with physical cable connections was the case in which multiple presenters wish to perform presentations while taking turns using respective personal computers (PCs). (EX-1006, ¶0004; *see also* EX-1031[1], ¶0003 (recognizing the limitation of physical cable connections in meetings requires physically reconnecting each electronic device to share media on separate electronic devices)). By designing systems utilizing wireless communication, between a media device (*i.e.*, computer) and a display device (*i.e.*, a second computer, projector, or similar device), "the cable can be prevented from becoming an obstacle." (*Id.*)

41. Techniques developed for wirelessly sharing media content included sharing content displayed on a laptop computer or other portable electronic device with another, separate display, for example, in a conference room. Although early on bandwidth of the wireless systems was a potential issue, to address this problem, US Patent Application Publication No. 2002/0196378 ("Slobodin") proposed a method and apparatus for wireless transmission of "screen scraped" images to a

[1] This is the English Translation (EX-1031) to JP Patent Application Publication No. 2008-165007 (EX-1055). All citations are to the English Translation (EX-1031). EX-1056 is the corresponding certificate of certified translation.

projector to reduce the amount of transmission bandwidth. (EX-1033, Title, Abstract, ¶¶12-14.) As shown in FIG. 1 of Slobodin (reproduced below), an image-generating device 110 (*e.g.*, a laptop computer) generates a digital image on a display device 111 that is transmitted over a wireless link 120 to a remote presentation projector 130 for projection 145 by a presenter 150. (EX-1033, ¶33.) Screen scraping was used to capture display data that was then transmitted to the projector. (EX-1033, ¶¶12-14.) The '676 patent borrows this same screen scraping technique from Slobodin. (*See* EX-1001, 13:59-63.)

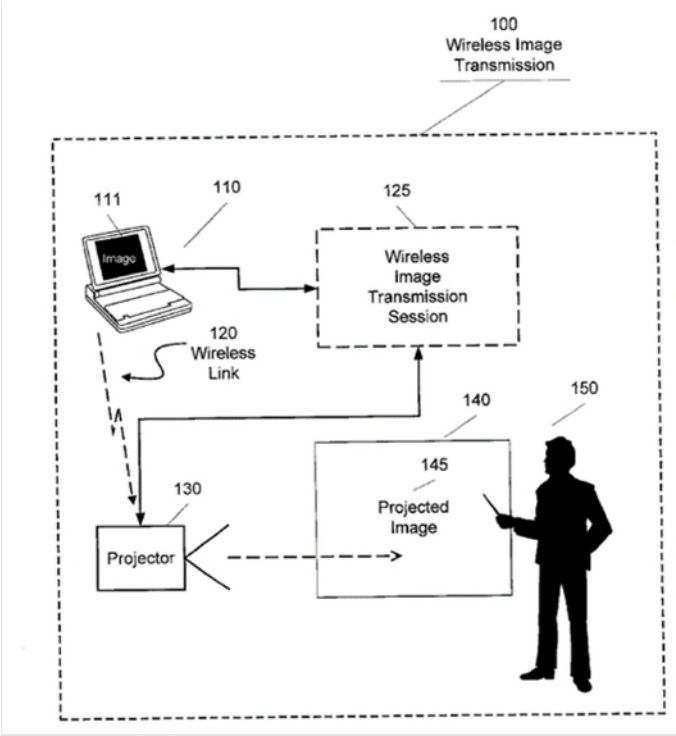

(EX-1033, FIG. 1.)

42. As wireless networking technology progressed, focus shifted to making the tools more user-friendly and pluralistic. For example, efforts focused on making

it easier for multiple users to establish network connections to implement wireless communication for image sharing. (*See, e.g.*, EX-1034, ¶¶1-8.) U.S. Patent Application Publication No. 2002/0174254 ("Kita") (EX-1034) describes a system in which network interface cards were preconfigured to connect to a wireless LAN, such that multiple computers 11 could be wirelessly connected to a projector 16 by merely inserting one of these interface cards 11 without participants needing to configure a network connection. (*See, e.g.*, EX-1034, ¶¶14-17, FIGS. 3 and 18, reproduced below.)

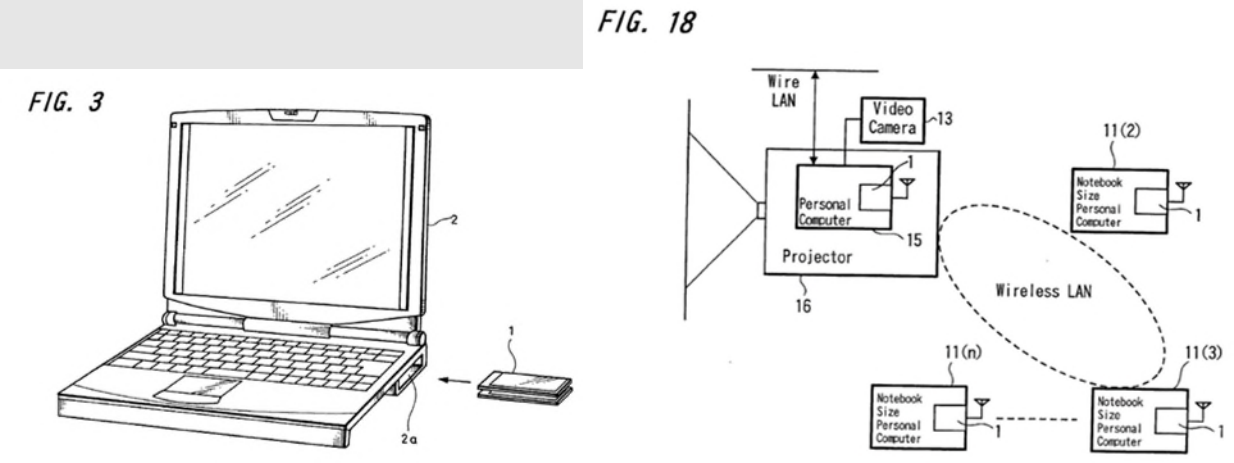

(EX-1034, FIGs. 3 and 18.)

43. During the 2000s, wireless technology shifted from wireless LAN cards, as described by Kita, to the increasingly more ubiquitous Universal Bus Standard (USB) standard. A range of plug-and-play USB-type devices emerged for sharing both image and audio. For example, U.S. Patent Application Publication No. 2005/0210390 ("Ono") proposed the use of USB-type "communication

modules" to wirelessly connect an image projector with multiple "information terminal apparatuses," depicted below as laptop personal computers. (EX-1005, ¶¶36-39.) The communications modules plug into a USB port of the information terminal apparatuses and wirelessly transmit images via a wireless network from the laptop display to a corresponding wireless connection module coupled to the image projector. (EX-1005, ¶¶36-39, 54.) I discuss Ono in greater detail below in Grounds 1, 3, and 5.

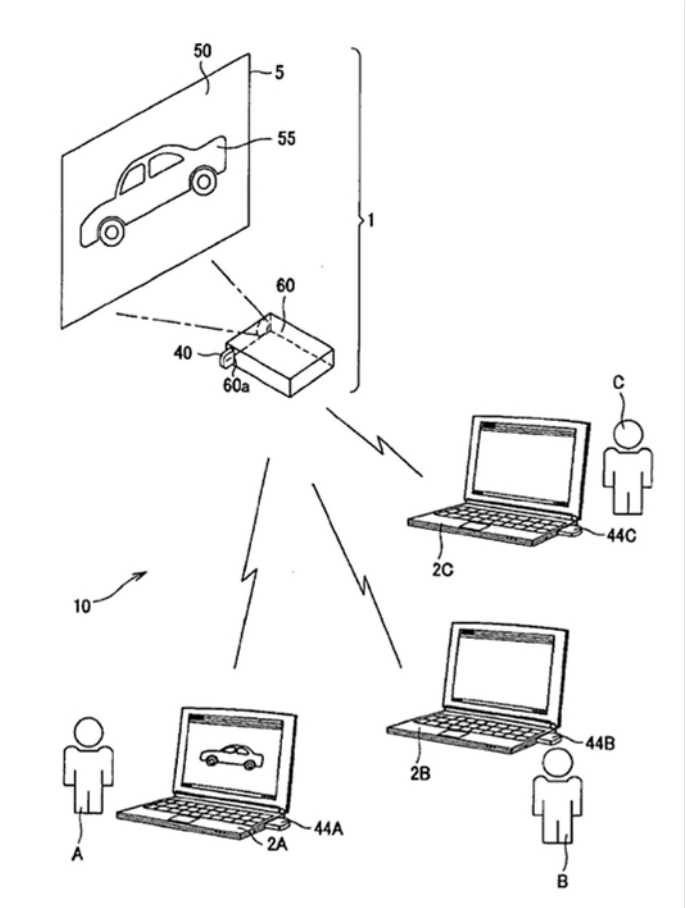

(EX-1005, FIG. 1.)

44. Around the same timeframe, Japanese Patent Application Publication No. 2008-165007 ("Uchida") (EX-1009)[2] described a similar image projection system. Uchida describes a personal computer device 4 wirelessly connected to an image projection device 3 (*e.g.*, a projector) via a wireless device 1. (*See*, *e.g.*, EX-1009, ¶39 and FIG. 1, reproduced below.) The wireless device 1 is described as a USB dongle. (EX-1009, ¶39.) The wireless device 1 is connected to the computer 4 and transmitted image data from the computer 4 to the image projection device 3 for display. Wireless setting information is automatically provided without requiring a user to enter this information—thereby making it more convenient for the user to make use of the tool. (EX-1009, ¶¶41-44.) I discuss Uchida in greater detail below.

[2] This is the English Translation (EX-1009) to JP Patent Application Publication No. 2008-165007 (EX-1010). All citations are to the English Translation (EX-1009). EX-1011 is the corresponding certificate of certified translation.

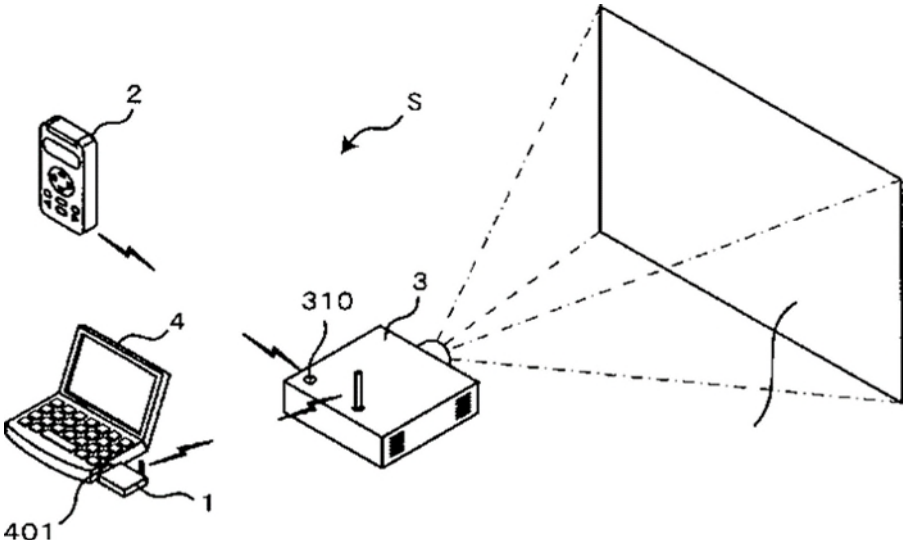

(EX-1009, FIG. 1.)

45. Near the end of the 2000s, the availability of greater wireless bandwidth led to greater amounts of media content being streamed wirelessly to different devices. For example, U.S. Patent Application Publication No. 2010/0295994 ("Kaplan") (EX-1027) describes a communications system in which a computer 220 is wirelessly connected to a display device 210 via a USB transmitter 120. (*See*, *e.g.*, EX-1027, ¶¶16-18 and FIG. 2, reproduced below.) The transmitter is pre-paired with a receiver 110 connected to the display device 210, such that a user does not need to configure the wireless connection. (*See* EX-1027, ¶0018.)

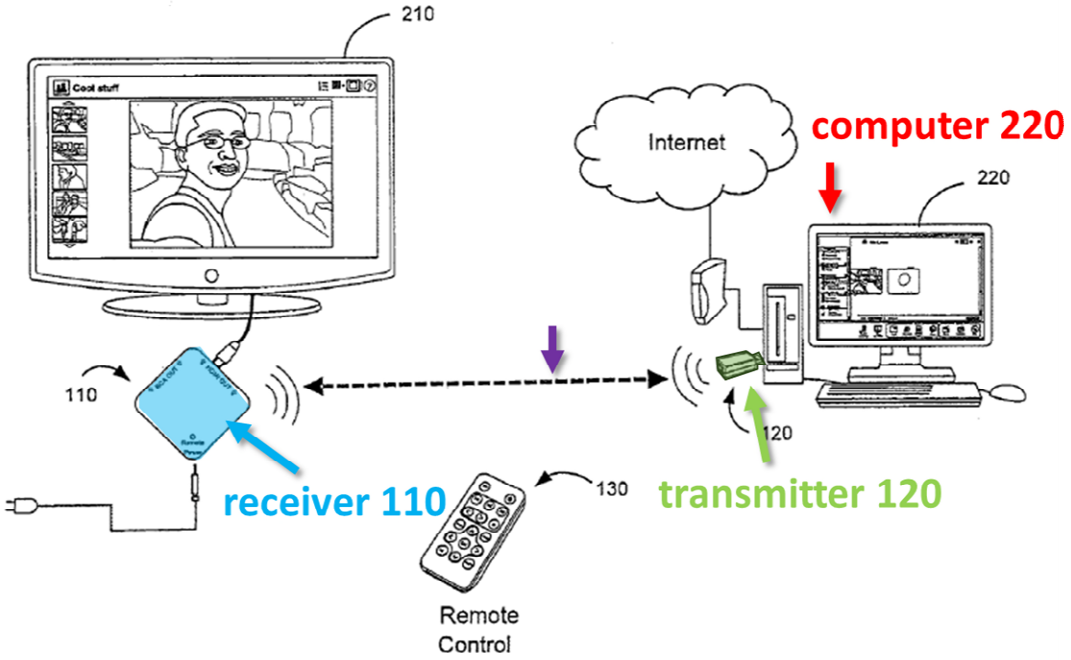

FIG. 2

(EX-1027, FIG. 2.)

46. Around the same time, several commercial products were available that employed similar USB dongles for wireless communication between a personal computer and a projector or other display. One example was sold by Imation from at least during 2008 (EX-1050 (Imation), p. 8.) The Imation system included a USB transmitter dongle that plugged into a personal computer and allowed communication with a base unit that was connected to a projector or monitor. (*See* image below reproduced from EX-1050 (Imation), p. 2.) Imation's system adaptable for use at a conference or meeting with multiple wireless adapters able to communicate with the same projector/monitor (EX-1050 (Imation), p. 6 "Associate a New Dongle to the WPL Base Unit".)

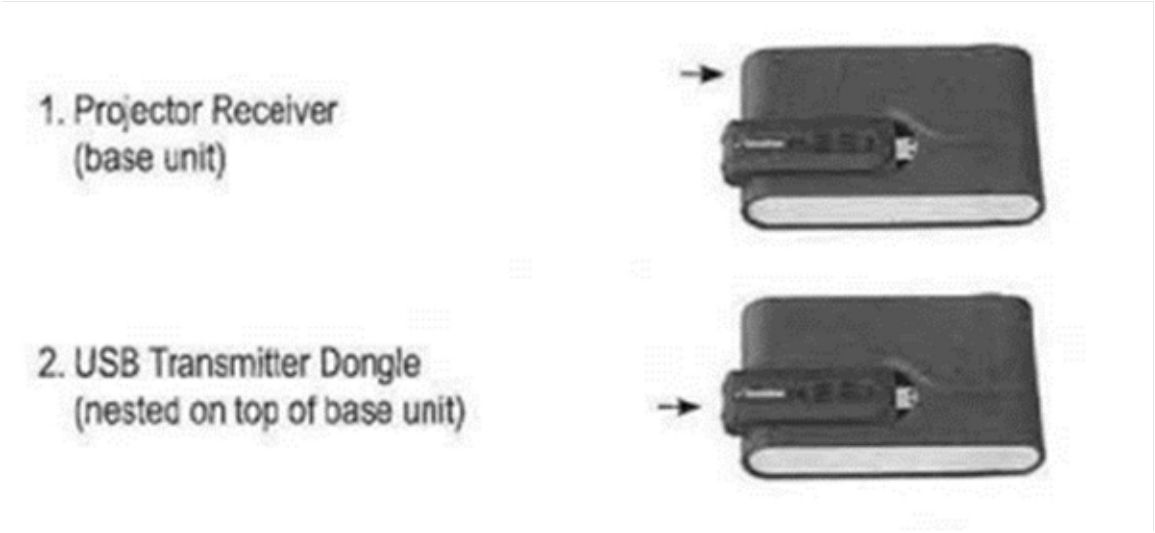

(EX-1050, p. 6 (excerpted).)

47. The Imation system had a simple startup that only required attaching the base unit to the projector/display and to power and inserting the USB transmitter dongle into the personal computer. After only about 20 seconds, a start screen appeared that allowed transferring an image from the computer to be displayed on the projector/monitor. (*See* image reproduced below from EX-1050 (Imation), p. 2 "Simple Start UP (PC)".) Although an optional special driver was available, this driver was not necessary for operation (EX-1050 (Imation), "Installing DisplayLink™ Driver (PC)".)

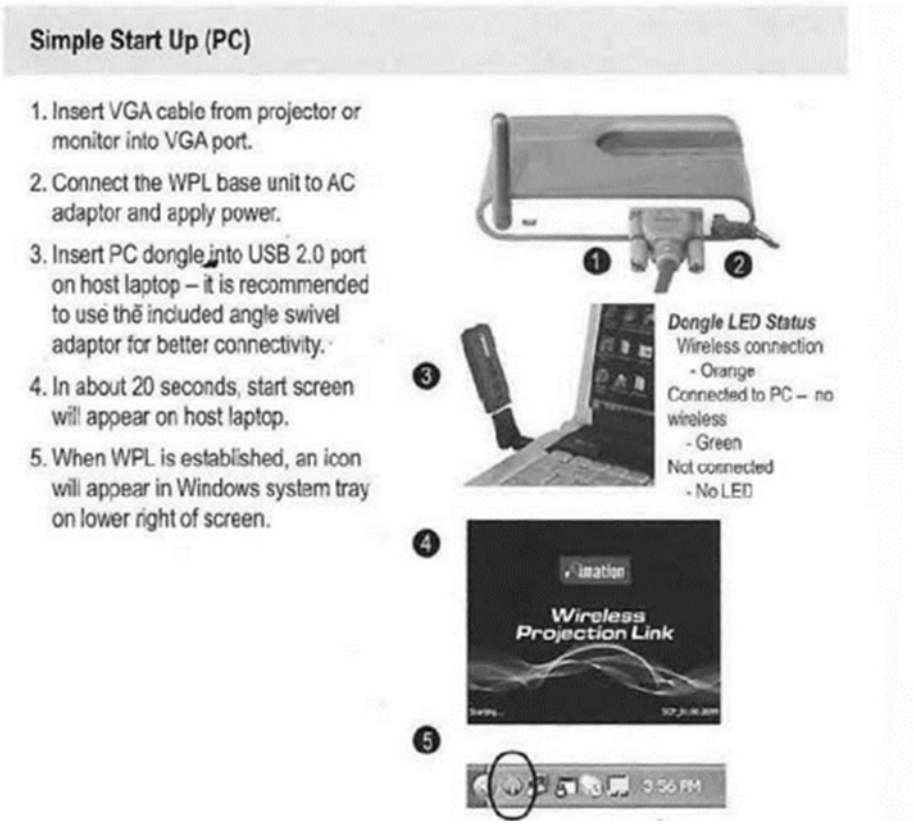

(EX-1050, p. 2 (excerpted).)

48. As example of another system employing this technology at the tmie of invention, another wireless adapter system was sold under the EZAir brand from around 2010 (EX-1051 (EZAir), p. 1.) According to promotional materials for the EZAir, "[t]he products operate via a Plug&Play USB dongle that plugs into a USB port available in any PC/Laptop and an adapter that connects to the target device (such as flat TV, speaker system or PC peripherals)." (EX-1051 (EZAir), p. 2.) The adapter was also marketed for use in small business and education where multiple participants commonly need to interact with the same projector/display (EX-1051 (EZAir), p 2.) An image from the EZAir marketing material (EX-1051 (EZAir))

illustrates the Plug&Play USB dongle transmitting image and audio data wirelessly to the adapter connected to a television. The image of an undersea scene from the laptop connected to the dongle is reproduced on the television.

(EX-1051, p. 1 (excerpted).)

49. Wireless adapters with a similar form factor were also sold under the Warpia (EX-1052 (Warpia) and Q-Waves (EX-1053 (Q-Waves)) brands. According to marketing materials from 2009, the Warpia system allowed wireless connectivity from a notebook or PC to displays, such as projectors, TVs, and monitors (EX-1052 (Warpia), p. 1, "Key Features," "Overview".) The Warpia system included pre-associated (i.e., pre-paired) adapters that provided audio and video communication to the display (EX-1052 (Warpia), p. 1, "Key Features".) The system was easy and quick to set up. (EX-1052 (Warpia), p. 1, "Key Features".) An image from the Warpia marketing material (EX-1052 (Warpia)) is shown below, illustrating image transfer from a PC Adapter connected to a laptop computer to A/V Adapters

connected to a projector and a television. The PC Adapter was able to connect to a USB port, which were common to all notebooks & PCs at the time, and the A/V Adapter connected to an HDMI port or VGA port of a display device. (EX-1052 (Warpia), p.1 "Overview".)

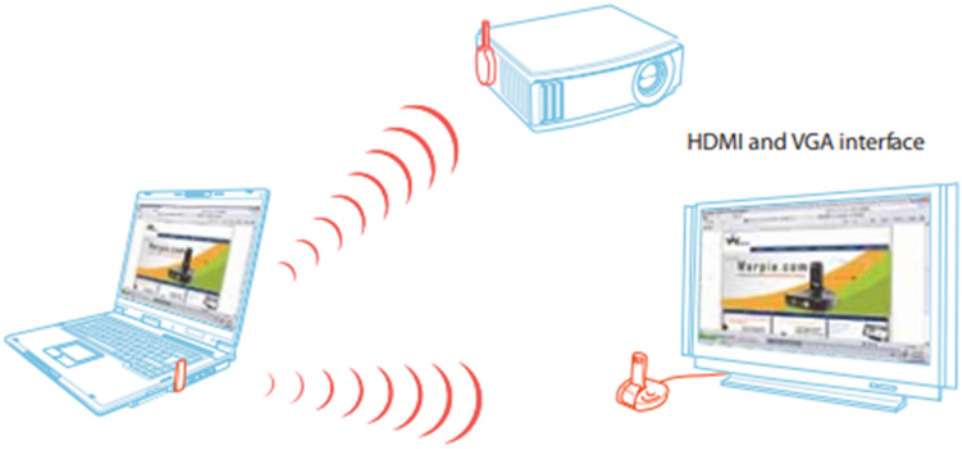

(EX-1052, p. 1 (excerpted).)

50. As yet another system implementing a wireless adapter, IOGEAR sold another wireless media communication kit from at least 2008 (EX-1054 (IOGEAR), p.44 (copyright date).) The kit included a wireless USB host adapter that plugged into a computer from which media was transmitted wirelessly to a wireless VGA adapter connected to a projector or other display. (*See* images below reproduced from EX-1054 (IOGEAR), pp. 13, 16.)

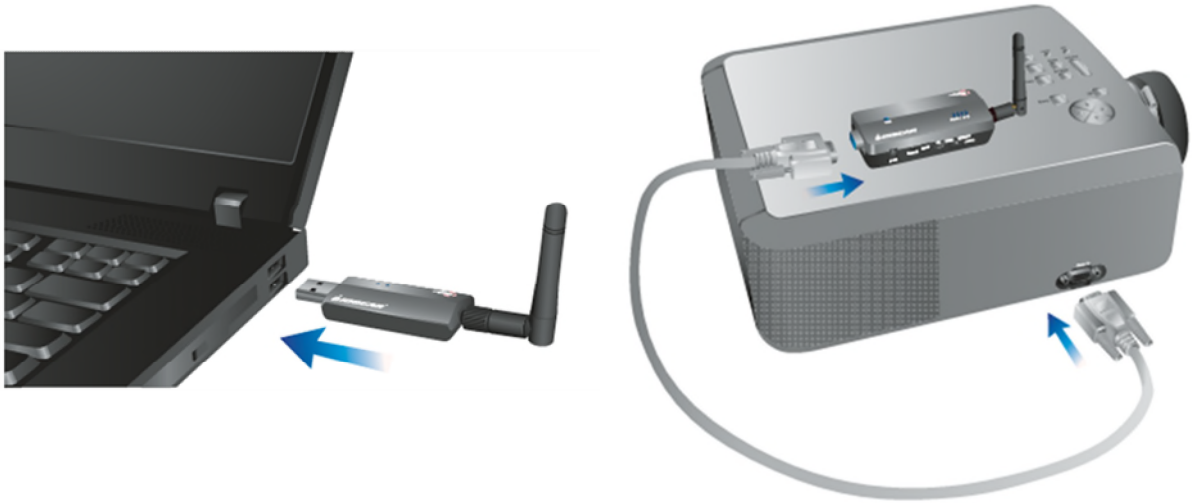

(EX-1054, pp.13 (left – wireless host adapter), 16 (right – wireless VGA adapter) (excerpted).)

51. The IOGEAR product anticipated that the host computer operating system would have included pre-installed USB drivers that allowed the USB host adapter to be set up automatically. For instance, IOGEAR indicated that one can "[p]lug the Wireless USB Host Adapter to your computer via option 1 or 2. Windows will detect the device and complete the driver installation process automatically." (EX-1054 (IOGEAR), p. 13.) The wireless USB host adapter and wireless VGA adapter were pre-associated (or pre-paired) to improve ease of use, such that no network configuration needs to be entered by a user. (EX-1054 (IOGEAR), p. 40.) The IOGEAR kit was also adaptable for use by multiple participants in a meeting. For example, additional wireless USB host adapters could be paired with the same wireless VGA adapter (EX-1054, p. 28) A "HOST" button on the wireless VGA adapter could then be used to switch between which wireless USB host adapter was

transferring data to the VGA adapter for display. (*See* EX-1054 (IOGEAR), p. 28, "Wireless USB Host Adapter Selection" reproduced below.)

Wireless USB Host Adapter Selection

To use this button, you must purchase at least one additional Wireless USB Host Adapter (GUWA200). The additional Wireless USB Host Adapters not included in this kit will have to go through the association process before they can be used with the Wireless VGA Adapter. For more information about the association process, please refer to Appendix - Cable association with other devices .

The "HOST" button on the Wireless VGA Adapter is used to switch between Wireless USB Host Adapters. By pressing this button, the Wireless VGA Adapter will look for the next associated Wireless USB Host Adapter in its list and connect to it. The 1-2-3 lights will move to the next position. If multiple Wireless USB Host Adapters have been associated with the Wireless VGA Adapter, you may have to press the button multiple times before a connection is made with the desired Wireless USB Host Adapter. Up to 16 Wireless USB Host Adapters can be associated with your Wireless VGA Adapter.

(EX-1054, p. 28 (excerpted).)

52. It is apparent from the example prior art patent and product literature discussed above that content sharing techniques were well-established by the time of the invention. I have discussed several examples of techniques to transfer image data from a computer to a display routed through a wireless USB dongle or similar set of devices, so that data from the computer display can be presented on another display. The USB technology of these various products utilized standardized USB drivers and communication protocols available to allow a plug-and-play experience. (*See*, *e.g.*, EX-1050 (Imation), p. 2 "Simple Start Up (PC)".)

A. Forcing Rule

53. One aspect of content sharing among multiple users is the user experience itself. A display system may be shared by a group of users, each of who

wishes to present content on a shared projector or other display. (*See*, *e.g.*, EX-1057, ¶0007; EX-1005, ¶0007; EX-1008, ¶0019; EX-1013, ¶0002.) For example, U.S. Patent Application Publication No. 2011/0096138 ("Grimshaw") describes the following scenario in a meeting room context:

> consider the case where separate laptop computers are connected to user modules 14-20 and are vying for control of the display module 22; that is, each of the connected computers is outputting data signals through data connections 342, 352, 362, 372 for presentation on display module 22. The display module 22 may not simultaneously display the information from all four computers/user modules. (EX-1008, ¶0019.)

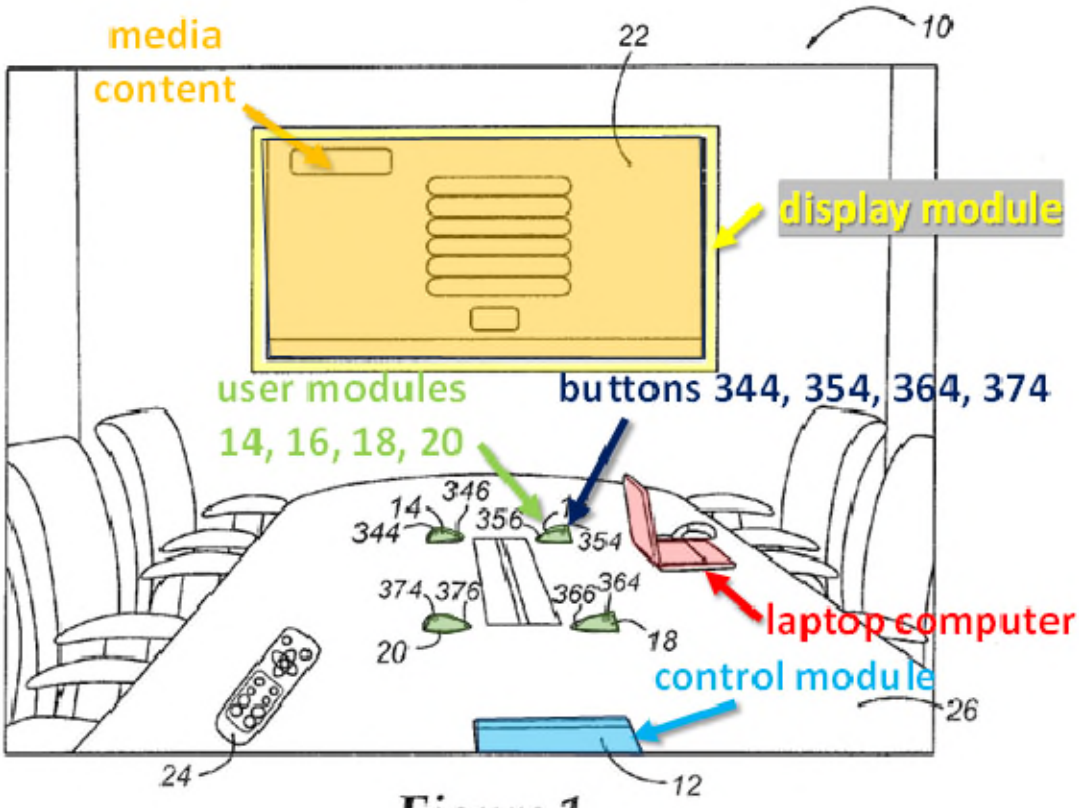

Figure 1

(EX-1008, FIG. 1.)

54. A POSITA would have understood and likely recognized that a variety of known design options could be implemented to handle this type of situation. Grimshaw itself describes that "user modules" can be coupled to each user's laptop computer, which connect the laptops to a shared display module. (EX-1008, ¶¶0005-0006, 0012, 0019-0020, 0023-0024, 0026-0027.) Each user module includes a button that allows the user to forcibly switch control over the display module. (EX-1008, ¶0020.) Grimshaw states that:

> [a] user may engage or push a button 344, 354, 364, 374 on their user module in order to take control of display module 22 (e.g., display module 22 could show whatever is currently being displayed on the screen of the laptop computer connected to the selected user module). (EX-1008, ¶0020.)

Grimshaw then explains possible ways to implement this functionality, stating:

> In the example above, controller 324 reviews the status of buttons 344, 354, 364, 374, determines that user module 14 has been selected, and sends command signals to switch controller 318, video processor 316 and/or converter 320 instructing them to pass the data signals from the selected user module 14 to display module 22. It is possible for controller 324 to review the status of each user module 14-20 or only those user modules that have a laptop computer or other device connected thereto, to cite a few possibilities. Controller 324 is not limited to this example, as it may gather information, make decisions,

> and issue command signals for a variety of other tasks as well. (EX-1008.)

55. Hence, Grimshaw describes a set of rules, including a "forcing rule" where, by the action of only one participant involved in the meeting, new screen data from the laptop of that participant overrides or replaces any data displayed on the display module without requiring the agreement of another participant (including the one whose screen was being displayed).

56. U.S. Patent Application Publication No. 2005/0210390 ("Ono") describes yet another, similar solution, using instead a remote controller to switch among PCs wirelessly connected to a projector. (EX-1005, ¶¶0007, 0036-0039, 0064-0070, 0077-0078, 0144, FIGs. 1, 3.) Ono's system describes an image display apparatus capable of switching among a plurality of networked information terminal apparatuses 2A, 2B, 2C (e.g., personal computers (PCs)) and selecting a desired PC for displaying its screen content on a larger shared projection screen 5. (*Id.*) As Ono illustrates below in Figures 1 and 3, the user simply presses a button on the remote controller 69, which brings of a list 71 of the connected PCs. Ono explains:

> When the user selects from the list 71 the information terminal apparatus s/he wants to connect with by pressing the up or down selection key on the operation section of the remote controller 69 and presses the confirm (enter) key, the image display apparatus 1 connects with the selected information terminal apparatus. (EX-1005, ¶0078.)

In this way, a user can forcibly switch between the different PCs to display on the projections screen the desired content.

FIG. 3

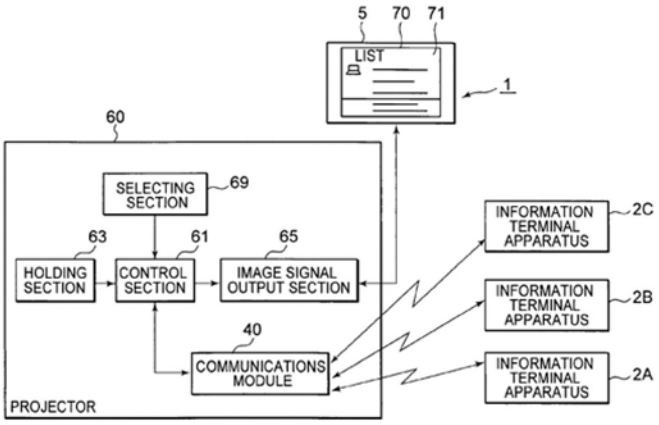

FIG. 1

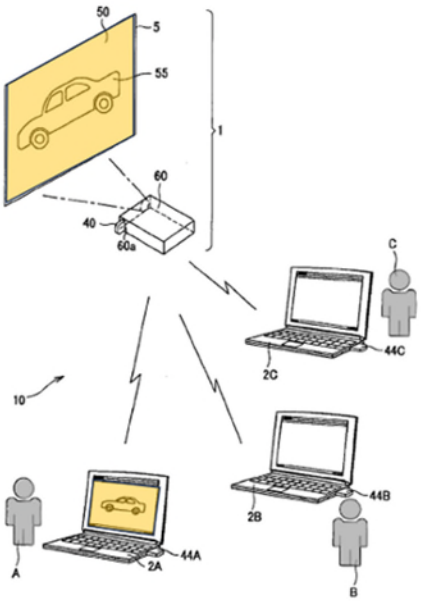

(EX-1005, FIGs. 1, 3.)

57. Ono also provides a specific switching method (or set of rules), according to one embodiment to implement this type of switching, in Figure 13. (EX-1005, ¶0111-0126, FIG. 13.) As illustrated in Figure 13 below, PC 2A begins connected to the projector. (*Id.*) After PC 2B is selected by the remote controller, a sequence of steps occurs to disconnect PC 2A and connect PC 2B. (*Id.*) Once PC 2B is connected, "the transfer of image information from the [PC] 2B to the projector 60 is begun, and the projector 60 of the image display apparatus 1 projects and displays on the screen 5 the image from the information terminal apparatus 2B. (EX-1005, ¶0125.)

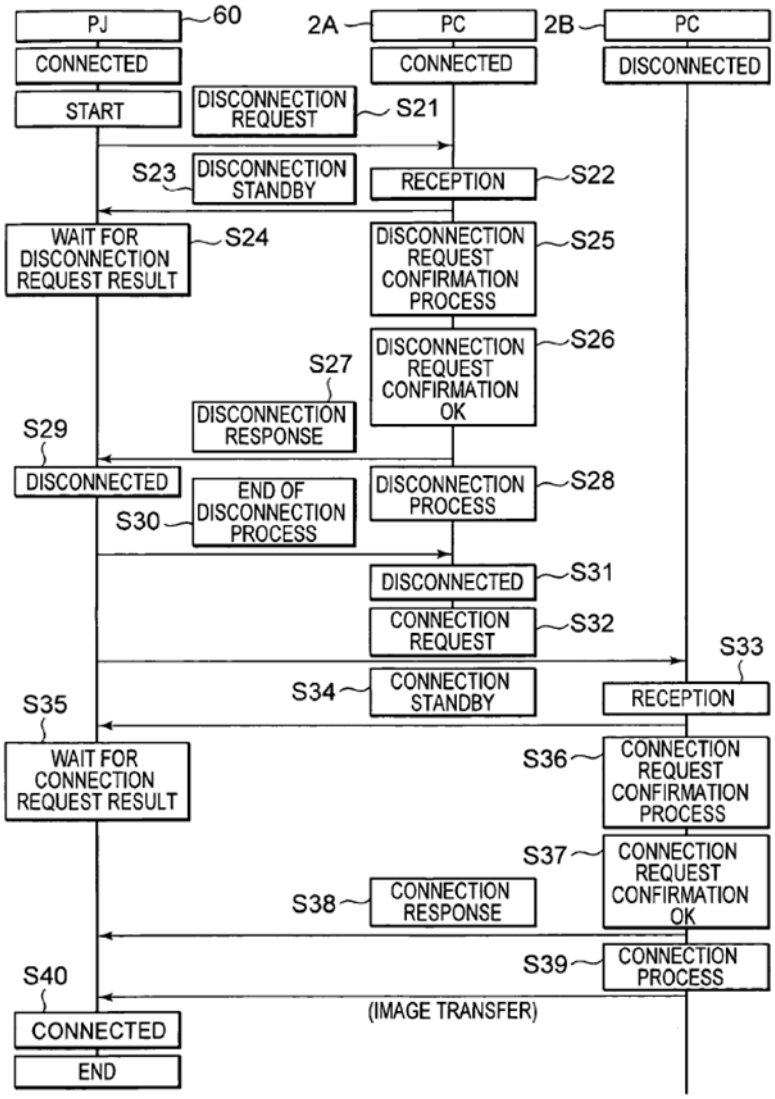

(EX-1005, FIG. 13.)

58. Thus, through operations using the remote controller 69, the image display system 10 is capable of switching among a plurality of PCs connected to a network and selecting the display content from the desired PC to be displayed on projection screen 5 "with ease." (EX-1005, ¶0144.)

> Further, since, *just through operations from the remote controller 69* of the image display apparatus 1, it is possible to switch the information

> terminal apparatus whose image is to be projected onto the screen 5, even in cases where, for example, there are a plurality of presenters to present in a given order, *it becomes unnecessary for each presenter*, in accordance with the order, *to perform an output on/off operation at each information terminal apparatus*, and therefore, the gap in time until the next presentation is eliminated, and presentations can be conducted speedily. (EX-1005, ¶0144.)

Hence, Ono, too, describes a set of rules including a "forcing rule" where, by the action of only one participant involved in the meeting, new screen data from the laptop of that participant overrides or replaces any data displayed on the display module without requiring the agreement of another participant (including the one whose screen was being displayed).

59. In addition, Ono teaches that the remote controller also has fast forwarding/rewinding capabilities. (EX-1005, ¶0070.)

> The information terminal apparatus 2 interprets the control data for fast forwarding/rewinding images, which is received through the wireless connection module 44, and fast forwards/rewinds the image information displayed on its display section. In conjunction there with, the image projected onto the screen 5 of the image display apparatus 1 is also fast forwarded/rewound. (EX-1005, ¶0070.)

Thus, through operation of the remote controller, the screen data projected onto the projection screen by the same participant is replaced without requiring the agreement

of another participant. In this additional way, Ono teaches a "forcing rule" as claimed.

60. WIPO International Publication No. 2010025557 ("Hill '557") describes additional approaches to an analogous screen sharing problem. As illustrated in Figure 2 (reproduced below), multiple participates of a meeting may wish to share screen content from their own computer with those attending the meeting (either locally or virtually) through a meeting application. (*See* EX-1013, ¶¶0031.) Hill '557 anticipates that there may be conflicts when multiple participants wish to share their content on the same display and provides multiple approaches depending on the desired context. (*See* EX-1013, ¶¶0048-0049.)

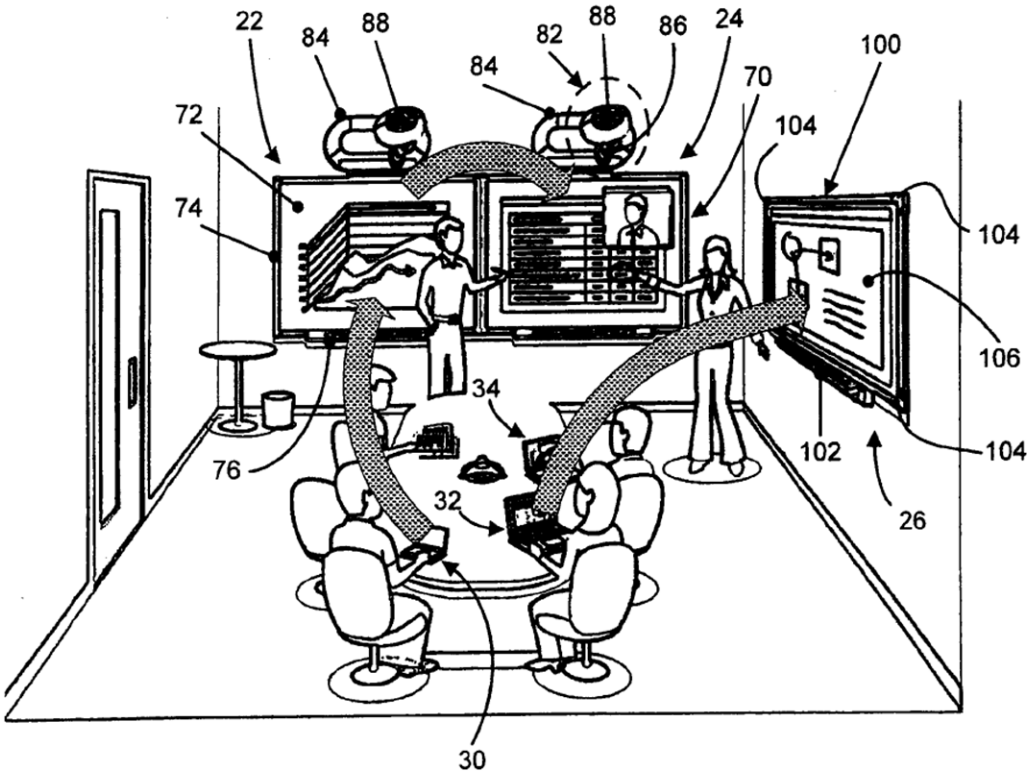

(EX-1013, FIG. 2.)

61. In connection with the method of Figure 6, Hill ’557 describes selecting a share screen icon 182 associated with one of the physical display devices or local or remote computing devices (step 300 in Figure 6) generates a screen share request that is conveyed to the meeting management application causing it to perform a check to determine if any screen is currently being shared (step 302). (EX-1013, ¶0048.)

> If a screen is currently being shared, a check is made to determine if the device that generated the screen share request has override status (step 306).… If the device that generated the screen share request has override status (e.g. the device is the central computer, is a device associated with a participant having administrative privileges or the conference session is democratic), sharing of the existing screen is terminated (step 308) and the screen associated with the device that generated the screen share request is shared (step 304). The meeting toolbars are also updated so that the stop sharing icon is presented on the device sharing the screen and the share screen icon is presented on the other devices. (EX-1013, ¶0049.)

62. Based on this disclosure, a POSITA would have understood that Hill ’557 discloses a set of forcing rules. In the case where the device associated with the participant has administrative privileges or where the conference session has been designated as “democratic,” screen data is replaced or overridden without requiring the agreement of another participant.

63. In a final example, U.S. Patent Application Publication No. 2005/0036509 ("Acharya") describes additional solutions by using different modes. (*See, e.g.*, EX-1057, ¶¶0056-0057 (describing a "self-service multiple-user mode"), 0058-0062 (describing a "roundtable multiple-user mode"), FIGs. 4, 5.) Acharya describes a system and method for interactive management of multiple wireless devices (such as PDA's or desktop or laptop computers) that make graphical or video presentations (*e.g.*, via screen scraping) while connected wirelessly to a display device. (EX-1057, abstract, ¶¶0036, 0043-0044, 0051-0054, FIGs. 1, 2.)

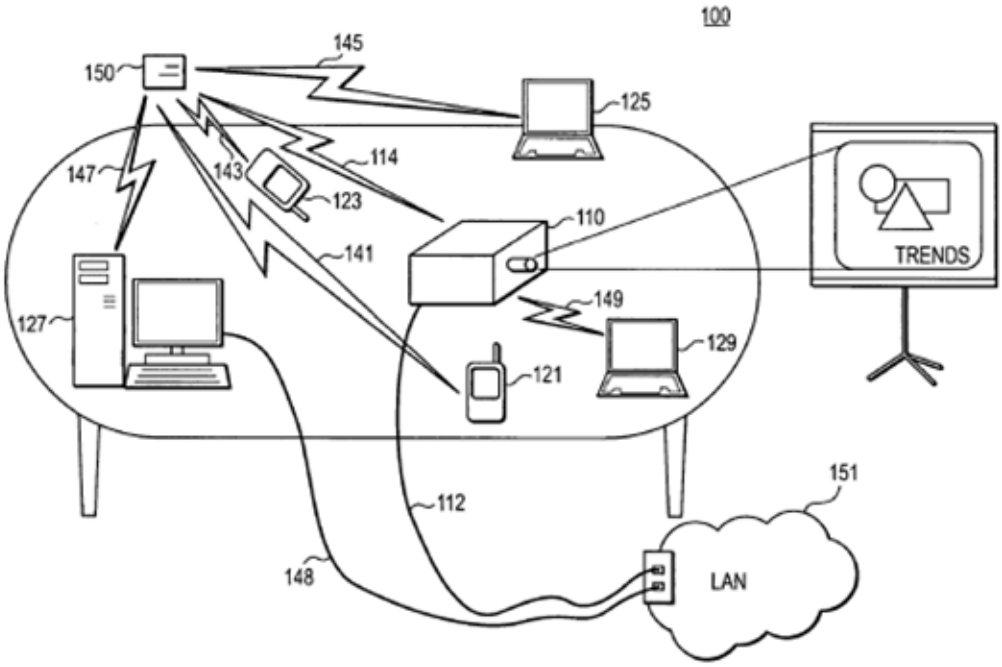

FIG. 1

(EX-1057, FIG. 1)

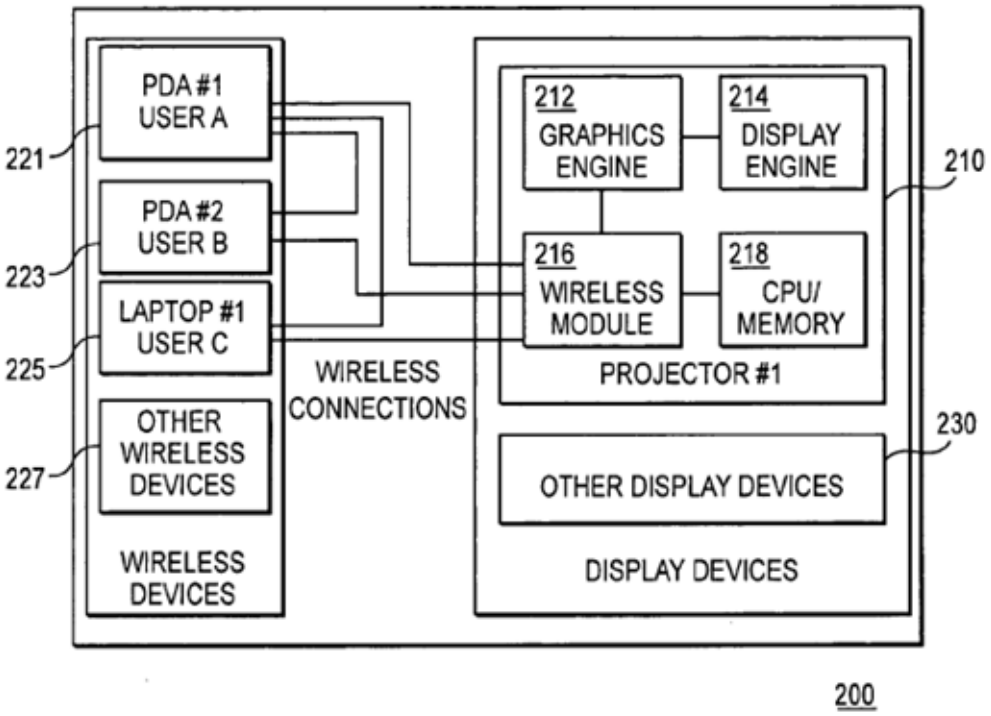

FIG. 2

(EX-1057, FIG. 2)

64. According to Acharya's "self-service multiple-user mode," an initial user, designated User A, connects with a network through a computing device (such as a laptop computer), selects a projector for display, and is automatically granted access (after completing an sing-in or authentication procedures). (EX-1057, ¶¶0056-0057, FIG. 4.) At a later time, User B (through the same or different network) also selects the same projector to which User A is connected. (*Id.*)

> Upon initially selecting the in-use projector, User B may be alerted to the fact that the projector is already in use by User A. User B may then

decide not to obtain control of the projector. However, as noted in act 460, if User B nonetheless connects to the projector, User A is then logged off from the projector and User B gains control over the projector. (EX-1057, ¶0057.)

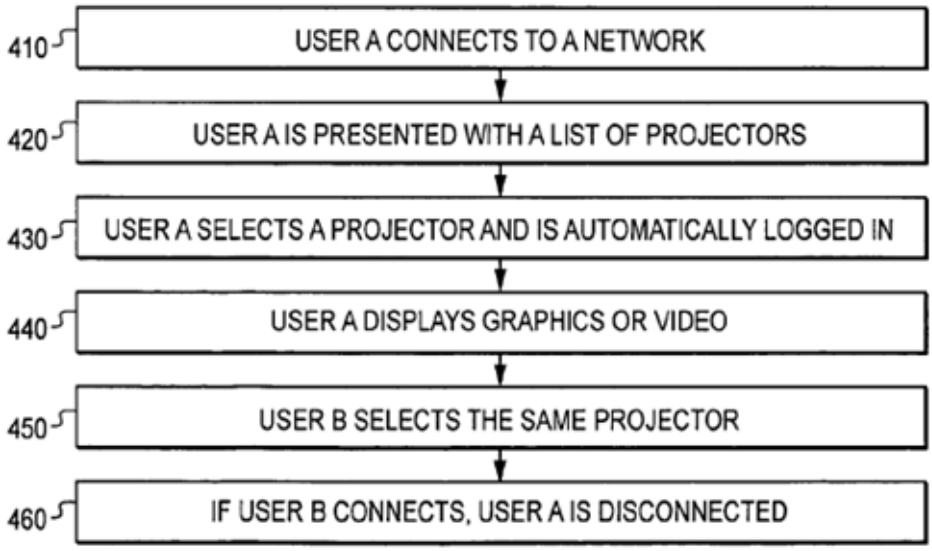

FIG. 4

(EX-1057, FIG. 4)

65. Hence, a POSITA would have understood and recognized that Acharya's "self-service multiple-user mode" describes a set of rules, including a "forcing rule" where, by the action of only one participant involved in a meeting, may override or replace any data displayed (such as screen scraped data) by a projector without requiring the agreement of another participant (including the one previously connected to the projector).

66. Acharya states that this "self-service multiple-user mode" may be advantageous, "for example, in a conference room meeting with many users taking the podium in sequence, or in the situation of a single user switching between two wireless PDAs or other computing devices during a presentation." (EX-1057, ¶0056.) Notably, it also may include a "safety mechanism: if a user does not log off after a presentation, the next user may nonetheless readily obtain control of the projector." (*Id*.) Thus, Acharya explains how implementing a "self-service multiple-user mode" would have been beneficial to a POSITA looking to implement electronic meeting tools where a display is shared among multiple participants.

67. In Acharya's "roundtable multiple-user mode," when User A connects to a projector, User A is given the option to select a rule (or it may be set by default) that "others must request permission" for any subsequent users seeking to connect to the same projector. (EX-1057, ¶0059, FIG. 5.) If the rule is selected and User B attempts connect to the projector, User A may refuse or choose not to respond. (EX-1057, ¶¶0060-0061, FIG. 5.) In the latter case, the lack of response:

> may be interpreted to mean that User A has stepped away from his computing device or otherwise is no longer using the projector. The access mode then specifies that control of the projector is transferred from the nonresponsive User A to the requesting User B after an appropriate waiting period, such as a half a minute or some number of minutes. If User B gains control following User A's response (or lack

of response) in act 570, User B may then use the projector. (EX-1057, ¶¶0061-0062.)

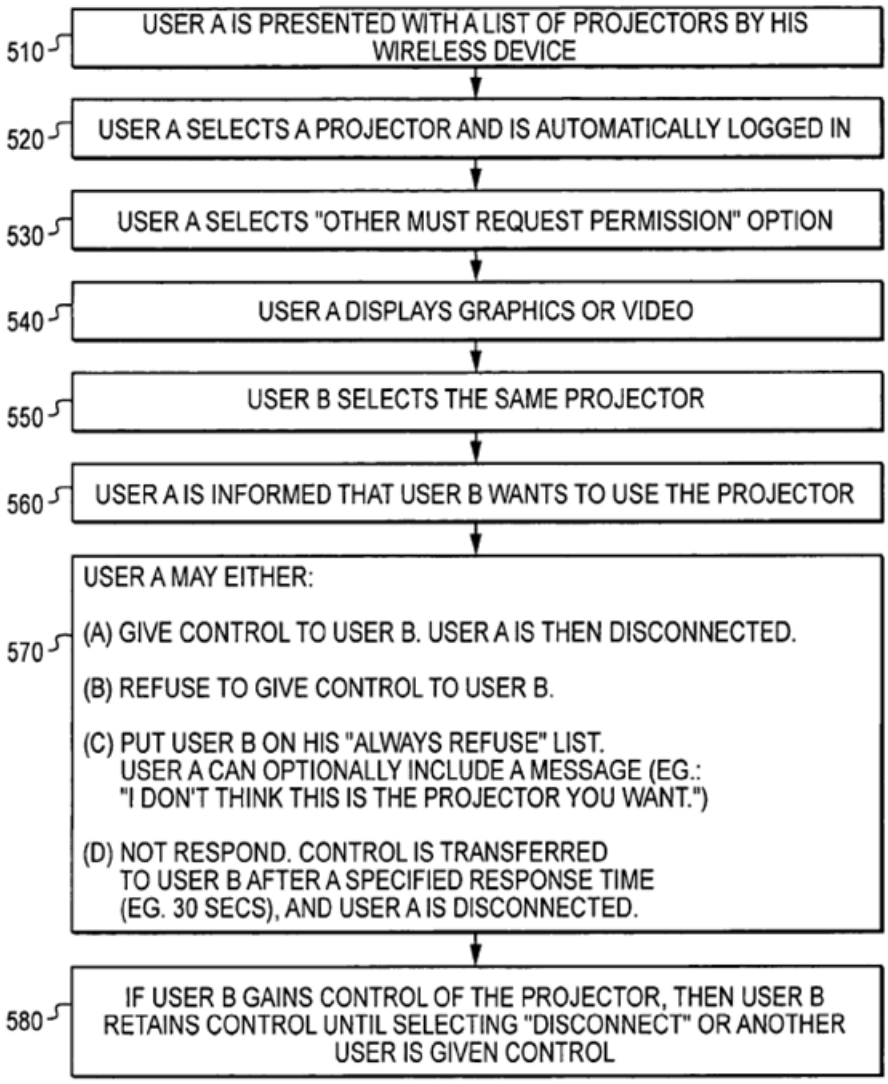

FIG. 5

(EX-1057, FIG. 5)

68. Hence, a POSITA would have understood and recognized that Acharya's " roundtable multiple-user mode," describes a set of rules, including a "forcing rule" where, by the action of only one participant involved in the meeting,

new screen data from the laptop of that participant overrides or replaces any data displayed on the display module without requiring the agreement of another participant (for example, when User B has failed to respond after a specified response time or User A has not required others to request permission).

69. Acharya explains that the "roundtable multiple-user mode" "may be useful in a boardroom-type meeting, where participants are engaged in a meeting with formal rules of order." (EX-1057, ¶58.)

VI. OVERVIEW OF THE '676 PATENT

A. Prior Art Techniques Acknowledged by the '676 Patent

70. The '676 patent is directed to electronic tools for meetings, including methods or devices for use in displaying media content. (EX-1001, 1:21-26; *see also id*., 5:37-61, 17:21-23:27.) In this vein, the '676 patent recognizes a recent "explosion of communication electronic communication tools" allowing ad hoc communication, such as "synchronous and asynchronous conferencing, online chat, Instant Messaging, audio conferencing, videoconferencing, data conferencing, application sharing, remote desktop sharing, electronic meeting systems, collaborative management (coordination) tools, project management systems, knowledge management systems, and social software systems." (EX-1001, 1:35-43.) The '676 patent contends that "despite the plethora of electronic aids to

meetings, fundamental problems in handling meetings have not been solved." (EX-1001, 2:29-31.)

71. The '676 patent acknowledges the known desirability for tools allowing greater participation in a meeting and tools addressing that need, such as the audience response system described in US 2010/0087139 (EX-1020 ("Glass")). (EX-1001, 2:37-55.) The approach taken by Glass uses a USB dongle to effectively turn an electronic device into an audience participation device. (EX-1020, abstract.) As illustrated below, an embodiment of the Glass system includes linkable response units 12b coupled by a connector (*e.g.*, a USB plug) to a port in electronic devices 24 (*e.g.*, a laptops). (*See*, *e.g.*, EX-1020, ¶¶0018, 0030.) Linkable response unit 12b wirelessly transfers information via a wireless transceiver 30 to a base station 14, which in turn may be displayed on a screen. (*See*, *e.g.*, EX-1020, ¶¶0013, 0020.) Linkable response unit 12b may also include a keypad/buttons 46 to trigger transmission of the information.[1] (EX-1020, ¶0033.) A program 42 stored on response unit 12b enables communication between the various devices. (EX-1020, ¶¶0021, 24-26.)

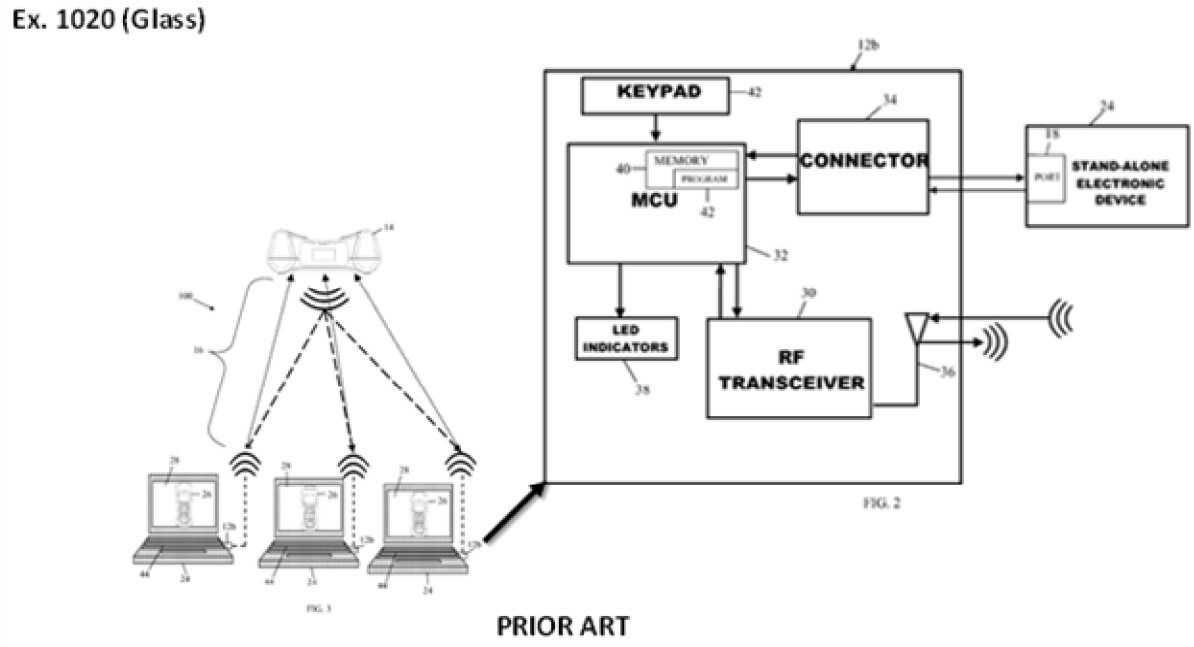

(EX-1020, FIGs. 2, 3.)

72. The ’676 patent also recognizes three common techniques for transferring content of a computer to a projector. (EX-1001, 3:29-41.) According to the ’676 patent, “[t]he most common ways are to use a cable that connects the display adapter of the graphics card to the video input of the projector [method 1] or to use a software that captures the display contents and sends it over a wired or wireless network to a remote base unit connected to the projector [method 2].” (*Id*., 3:30-35.) A known alternative to these techniques was “to use a special device connected to the display adapter of the graphics card that captures, encodes and streams the display content over a wired or wireless network [method 3].” (*Id*., 3:38-41.)

73. As examples of prior art techniques, the ’676 patent identifies US 2009/0198839 (EX-1021 (“Banerjee”)) and US 2011/0115689 (EX-1022 (“Sugiyama”). (*Id*., 4:55-62.) The ’676 patent admits that these publications describe the use of the “well-known USB interface of the computer for extracting the display content of the computer” and transferring to a projector. (*Id*.) Indeed, Banerjee describes, according to one embodiment illustrated in Figures 4 and 5 (below), a plug-and-play device 236 that physically connects to remote computer 240 and communicates with the master computer 238 over a wireless communications link. (EX-1021, ¶0039.) In this embodiment, “plug-and-play device 236 captures and compresses screen display data generated at the remote computer 240 and allows screen sharing between the remote computer 240 and the master computer 238 by automatically launching software stored on the plug-and-play device 236.” (*Id*.)

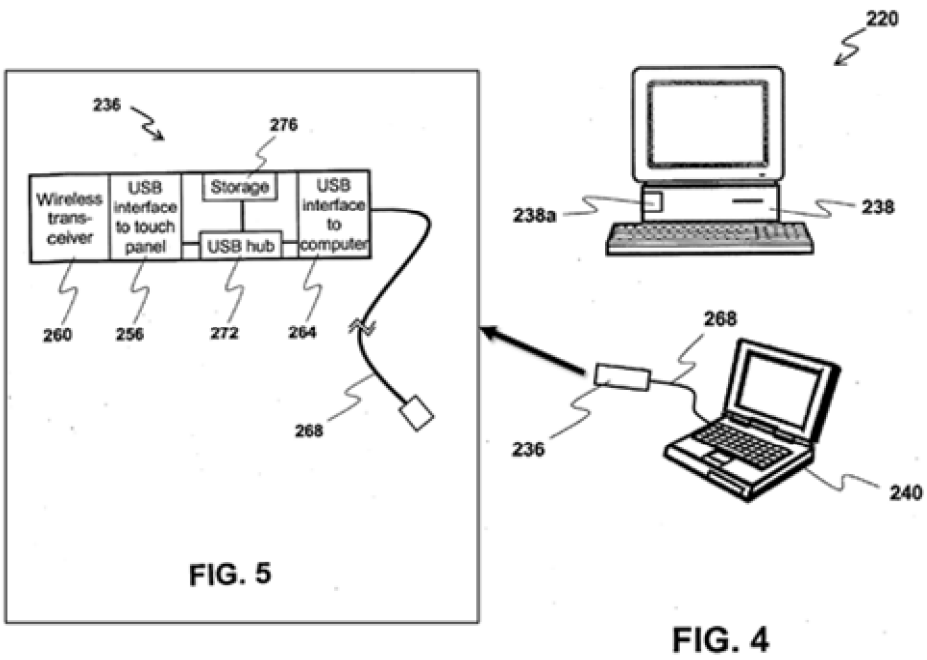

(EX-1021, FIGs. 4, 5.)

74. Although Figure 4 of Banerjee shows a master computer 238 communicating with a single remote computer 240, Banerjee contemplates that communication can be made to multiple remote computers via respective plug-and-play devices. (EX-1021, ¶0052.) Additionally, the master computer 238 may act as a node for transfer of the screen display data to a projection device 244 for display. (EX-1021, ¶0054.)

B. The Purported Invention

75. The ’676 patent purports to improve problems associated with previous meeting technologies such as the “high demands of technical expertise” and “barriers to the use of complicated technology” and the “lack of, or restriction of

participation by members of the meeting." (EX-1001, 5:6-18.) Yet, the claims of '676 patent are simply directed to electronic meeting tools that wirelessly communicate media content between an electronic device and a display via a peripheral device and base node—much like the acknowledged prior art discussed in the previous subsection. (*See id.*, 4:55-67, 32:40-36:28; Section VI.A.)

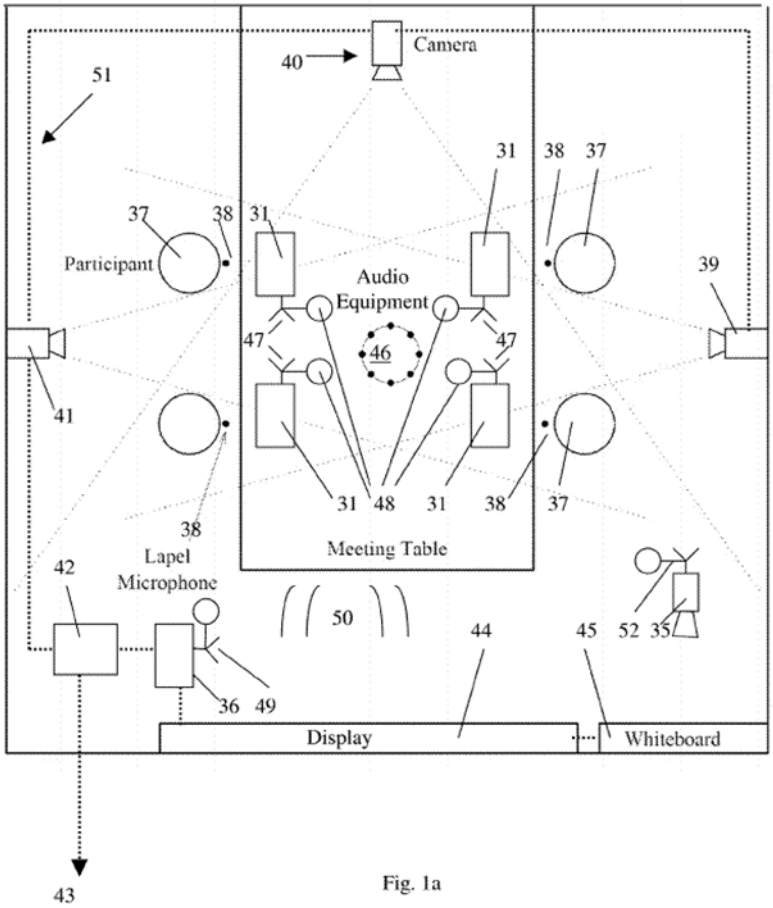

Fig. 1a

(EX-1001, FIG. 1a.)

76. Although described as an alternative method, the '676 patent fails to explain any concrete distinction between these prior art methods. Instead, the '676

patent asserts that the prior art method "usually requires special drivers and even special hardware." (*Id.*, 4:62-63.) However, this statement seems to acknowledge that at least some prior art USB-based content sharing methods did not require special drivers and hardware. The content sharing described in the '676 patent employs, for example, plug-and-play devices such as a wireless USB dongle. (*Id.* at 17:67-18:2, 21:6-21.)

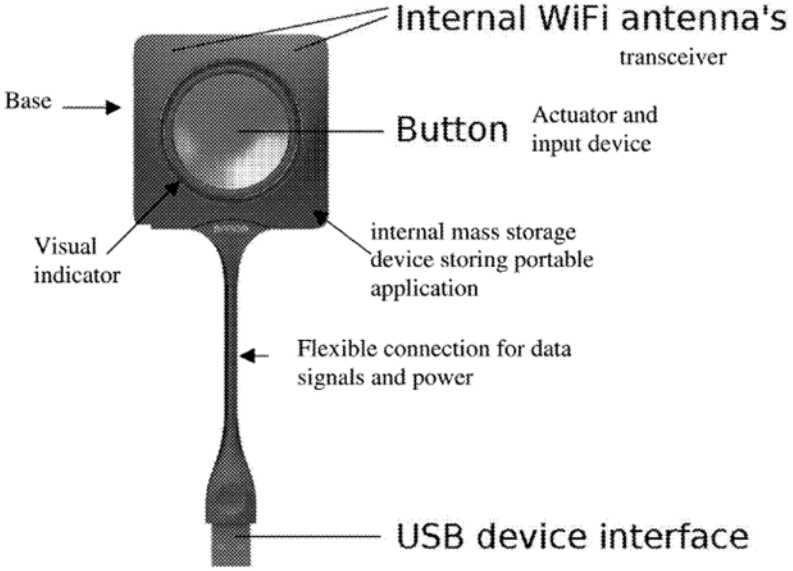

Fig. 10

(EX-1001, FIG. 10).

77. But the challenged claims are therefore not meaningfully different from these prior art wireless networking techniques, including, for instance, the methods and systems described in Ono, Uchida, and others discussed in further detail below.

C. Prosecution History

78. I have reviewed the prosecution history and noted that the examiner did not reject the ultimately allowed claims based on prior art. (*See generally* EX-1004.) In his reasons for allowance, the examiner acknowledged that the "prior art of record disclose online meeting systems, including cameras, participant computer systems, and displaying meeting information to each of the participants." (EX-1004, 28.) But, according to the examiner,

> prior art of record do not teach or suggest, inter alia, rules for the meeting system that includes <u>a forcing rule that displays new screen information by only one participant of the meeting, without requiring the agreement of other participants, that overrides or replaces the displays of one or more *of other participants*</u>. (EX-1004, 28.)

79. Yet as I discussed above, several similar electronic meeting tools describe systems the implement such a "forcing rule," as claimed. (*See* my discussion above in Section V.) Notably, the reasons given also does not accurately reflect the claim language. While the examiner's recitation seems to limit force a new screen by *one participant over another*, each "forcing rule" of the independent claims is not limited in this regard. Claim 1, for example, recites that data of *any participant* for display overriding or replacing *any data* on the one or more displays by *the same or another participant* of the meeting." (EX-1001, 33:11-14; *see also id*., 34:47-50 (claim 14 – "media content from the *any one of the user devices*

overriding or replacing *any data* displayed on the display by the *same or another participant* of the meeting"), 35:30-36:3 (claim 16 – "data of *any participant* for display overriding or replacing *any data* displayed on the one or more first displays by *the same or another participant* of the meeting").)

VII. CLAIM CONSTRUCTION

80. I understand that claim terms are typically given their ordinary and customary meanings, as would have been understood by a POSITA at the time of the alleged invention, which, as I explained above, I have been asked to assume is around September 14, 2011.

81. In considering the meaning of the claims, however, I understand that one must consider the language of the claims, the specification, and the prosecution history of record. In general, I have been asked to consider the claim terms under their plain and ordinary meanings and thus considered the claims, specification, and prosecution history for the '676 patent in doing so in support of my opinions concerning the '676 patent and the prior art discussed herein.

82. However, I have also been asked to consider the following descriptions for the terms below. Where the terms appear in the claims, I have read the terms in light of their corresponding descriptions from the '676 patent in so far it was necessary to apply them to the prior art. I have accounted for these descriptions in

forming my opinions whether or not I have specifically addressed those descriptions in further detail in the following sections.

83. Further, I understand the claim construction process has not yet begun in the EDTX case, and thus Patent Owner has not provided a position on the various "means" recited in the challenged claims. I understand some of the terms below presumably invoke 35 U.S.C. § 112(f) ("§ 112(f)"), *i.e.*, is a "means-plus-function" limitation, because each "means" limitation does not recite sufficient structure for performing the recited function.[3] *Williamson v. Citrix Online, LLC*, 792 F.3d 1339,

[3] I understand Petitioner also intends to argue in the parallel litigation that the limitation is indefinite because the '676 patent specification describes insufficient corresponding structure for the full scope of the function recited for the claimed "means" terms. Recognizing that the Board cannot address indefiniteness in an IPR proceeding, Petitioner satisfies its burden by advancing a means-plus-function construction in the IPR based on the limited corresponding structure described in the '676 Patent. *See DraftKings Inc. v. AG 18, LLC*, IPR2022-01447, Paper 12 at 25 (PTAB Mar. 14, 2023) (instituting review and accepting as procedurally proper a § 112(f) construction advanced in an IPR where the petitioner argued in the parallel litigation that the claim was indefinite for failing to disclose sufficient corresponding structure).

1349 (Fed. Cir. 2015). Per 37 C.F.R. § 42.104(b)(3), I understand the Petitioner is obligated to identify the "specific portions of the specification that describe the structure, material, or acts corresponding to each claimed function" for any limitations that invoke § 112(f). *See* Consolidated Trial Practice Guide ("CTPG"), 45 ("Where claim language may be construed according to 35 U.S.C. § 112(f), a petitioner must provide a construction[.]"). I also understand that Patent Owner may contend this limitation does not invoke § 112(f).

84. As set forth below, whether construed as a means-plus function limitation or not, the limitations requiring "means for", or similar language invoking means plus, captures at least the expressly described structure associated with the claimed function and equivalents. But even if these limitations were found to not evoke § 112(f), the claimed "means" must be construed broadly enough to capture the specifically disclosed examples and equivalents. Thus, my understanding of the terms, as described in the specification, and the analysis herein also applies to any term regardless of the analysis under § 112(f).

A. "means for communication" (claim 1)

85. The term "means for communication" presumably invokes means-plus-function language and refers to an interface using the generic communication protocol of claim 1. The "means for communication" appears to relate to the following passages in the specification:

> [O]ne of the pre-installed generic drivers of the operating system on the relevant computer device 31, 36 is exploited for setting up communication from the computer device 31, 36 to the network 50 via the connection unit 47 (optionally 49)….the connection unit 47, (optionally 49) operated as a peripheral device communicates with the relevant processing device 31, 36 by using a generic communication protocol provided by the pre-installed generic driver. (EX-1001, 20:38-50.)

The structure is therefore software or hardware for communicating data to the communications network.

B. "arbitrary media content" (claim 16)

86. The '676 patent states:

> [t]he term "arbitrary media content" refers to the fact that a user may generate, create or select any media content that is appropriate to display. This differs from client voting on, or selecting of media content that is displayed by another in a meeting or presentation. This term refers to client oriented, distributed rights and privileges for the display of content rather than a central presenter providing content which is presented to the members of the meeting. (EX-1001, 13:50-58.)

C. "coupled" (claims 14, 16)

87. The '676 patent states that:

the term "coupled", also used in the description or claims, should not be interpreted as being restricted to direct connections only. Thus, the scope of the expression "a device A coupled to a device B" should not be limited to devices or systems wherein an output of device A is directly connected to an input of device B. It means that there exists a path between an output of A and an input of B which may be a path including other devices or means. (EX-1001, 15:25-32.)

D. "wireless communications network" (claims 1, 4, 16)

88. The '676 patent states that:

[a] "wireless communication network" can be any network that does not use cable links between nodes, e.g. uses RF, optical or InfraRed for communication purposes, such as IrDA, diffuse infra-red, WLAN, WiMax, WiFi, WiFi Direct, Bluetooth or any other wireless communication network known to the person skilled in the art. (EX-1001, 14:1-6.)

E. "setting up, by means of the pre-installed generic driver" (claim 1, 5)

89. The '676 patent states that:

[t]he term "pre-installed generic driver" is intended to mean a driver which is installed on a processing device such as a computer as a standard driver, e.g. is installed with the installation of the operating system. Such a driver

> is standard for the operating system and can drive a standard class of peripheral devices coupled to or connected to the processing device. The installation of a specific driver for such a peripheral device is not required. Such a generic driver can be a human interface driver (HID) or a mass storage device driver, which has predetermined software components configured for driving mass storage, a CD-ROM, a keyboard etc. or combinations of these. Such devices can be readable and writable computer peripheral memory devices such as USB memory sticks, flash memories, external hard drives, or more. (EX-1001, 14:20-34.)

If this is a means plus function limitation for performing the function of setting up, the structure is the driver software.

F. "screen scraped data" (claim 1, 14)

90. The '676 patent states that:

> "[s]creen scraping" in our sense refers to reading the video frame buffers and processing them, rather than just rendering them on a display. (EX-1001, 13:59-61.)

91. I understand that no terms of the '676 patent have been construed by a court at this point.

VIII. OVERVIEW OF THE PRIOR ART

A. Ono (EX-1005)

92. Ono is directed to an "image display apparatus that receives images transferred from a plurality of information terminal apparatuses connected to a wireless [] network, and displays them on a display section." (EX-1005, ¶0002.) For example, Ono's disclosed invention "makes up a wireless network by connecting an image display apparatus 1 and three information terminal apparatuses 2A, 2B, and 2C to a wireless communications channel." *(Id.*, ¶0036.) The image display apparatus uses a screen and a projection apparatus to display shared media onto the screen. *(Id.*, ¶0038.) To wirelessly receive the media, Ono discloses that a "communications module 40, such as a wireless connection module," is inserted into a "slot 60a" on the projection apparatus, which creates, and subsequently uses, a wireless connection to a wireless communications channel to receive selected media from the multiple information terminal apparatuses 2A, 2B and 2C. (*Id.*)

93. Ono further discloses, connected through the wireless communication channel, information terminal apparatuses which may be personal computers. (*Id.*, ¶0039.) The information terminal apparatuses also use "Communications modules 44A, 44B and 44C, such as wireless connection modules," which attach to the body of the information terminal apparatuses via a slot and, in concert with the communication module of the projection apparatus, creates and subsequently uses a

wireless connection to the wireless communications to transmit media information to the projector apparatus to subsequently display. (*Id.*) Further, Ono's system is capable of switching among a plurality of networked information terminal apparatuses to select a desired PC for displaying its screen content. For example, "through operations from the remote controller 69 … it is possible to switch the information terminal apparatus … [and] it becomes unnecessary for each presenter … to perform an output on/off operation at each information terminal apparatus." (EX-1005, ¶0144).

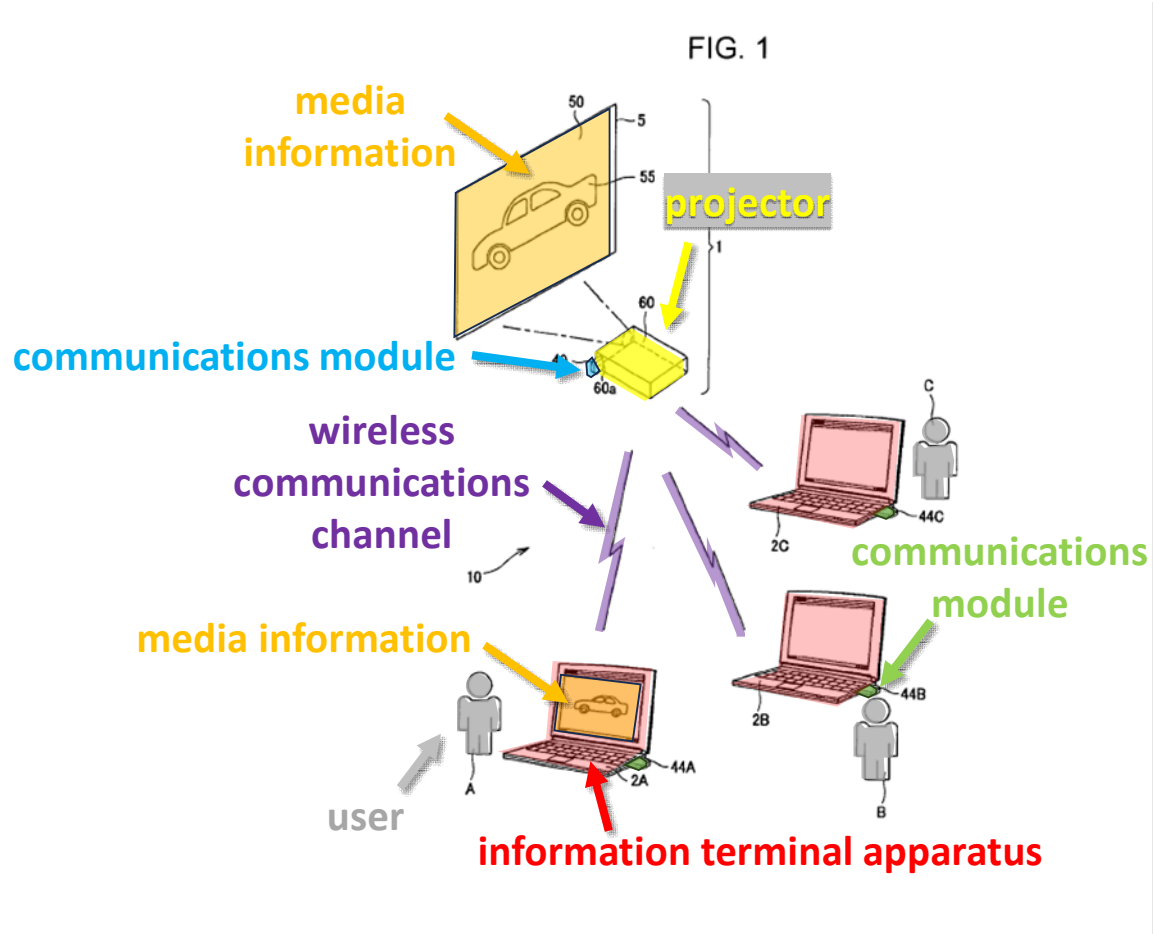

(EX-1005, FIG. 1.)

94. Overall, the Ono reference discloses using two wireless communications modules, one connected to the image display apparatus and one (or more) connected to the (one or more) information terminal apparatus, which create a wireless communications channel between the two and which allows the information terminal apparatus to transfer or share media content from the information terminal apparatus to the image display apparatus. Thereafter, the image display apparatus may display the media content on the screen to one or more persons.

B. Uchida (EX-1009)

95. Uchida discloses a method for connecting, by wireless communication, an image projection device to a computer device. (EX-1009, Abstract.) Uchida recognized that cable connections to connect image projection devices to computer devices could be complicated in a conference setting and that benefits could be achieved through, instead, using a wireless connection to transmit data. (*Id.*, ¶0004.) Further, Uchida recognized issues with wireless connection systems which required configuration of the wireless communication settings on the image display device and the computer device, which "require[d] a certain level of knowledge and is often not easy." (*Id.*, ¶0006.)

96. The system disclosed in Uchida uses a "wireless device 1 [of] a USB dongle" which connects to the "computer device 4" through a "USB connector 105." (*Id.*, ¶0039.) Through the wireless device connected to the computing device, the wireless device is able to "transmit image data to the image projection device 3 via the wireless device 1" by "wireless communication from the computer device 4" where, thereafter, the image projection device "projects an image corresponding to the image data on the screen" of the computer device. (*Id.*)

97. Uchida utilizes a storage unit in the wireless device 1 to store wireless setting information which, upon connection to the computer device, automatically configures the wireless settings to connect the computer device to the image projection device for wireless communication between the two devices. (*Id.*, ¶¶0042, 0048.) The computer device may then "transmit[] image data to the image projection device 3 via the wireless communication unit by executing an image transfer application." (*Id.*, ¶0048.)

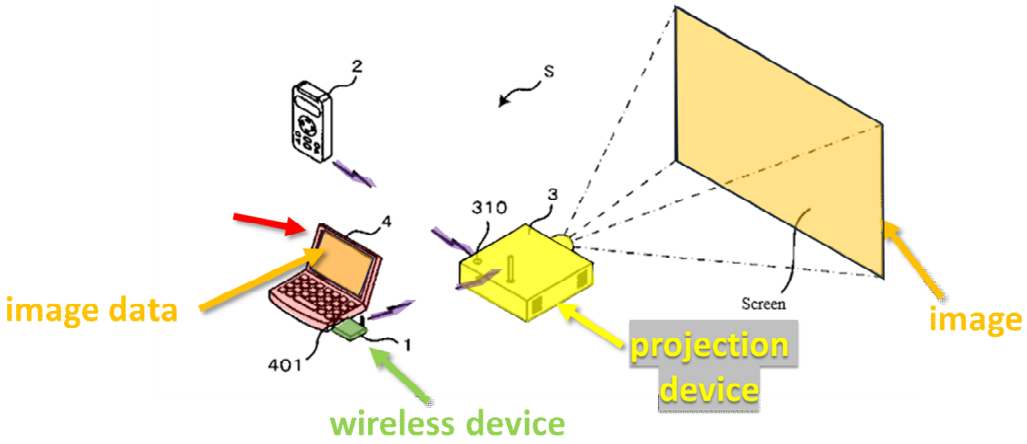

FIG. 1 (Ex. 1009)

(EX-1009, FIG. 1.)

C. Kaplan (EX-1027)

98. Like the ’676 patent, Kaplan discloses methods for transmitting video content between a computing device and display device. (EX-1027, abstract). In particular, Kaplan recognized the problem that setting up wireless network configurations was a “complicated process that many users find difficult and frustrating.” (*Id.*, ¶0003.) In fact, Kaplan discloses that the difficulty in setting up and operating 802.11-based networks was a contributing factor to the high level of customer returns of wireless networking equipment. (*See id.*) In that regard, Kaplan’s methods sought to “provide a user with the ability to conveniently view video footage … without having to perform any wireless network setup procedure.” (*Id.*, ¶0009.)

99. Kaplan, therefore, describes a communications system 100 in which a computer 220 is wirelessly connected to a display device 210 via a USB transmitter

120. (*See*, *e.g.*, EX-1027, ¶¶16-18 and FIG. 2, reproduced below.) The transmitter 120 is pre-paired with a receiver 110 which is connected to the display device 210, such that a user does not need to configure the wireless connection. (EX-1027, ¶0018). In this system, "the user may select a video to be played and the selected video footage may be transmitted from the computer 220 through the transmitter 120 to the receiver 110 and then displayed on the display device 210." (EX-1027, ¶0028).

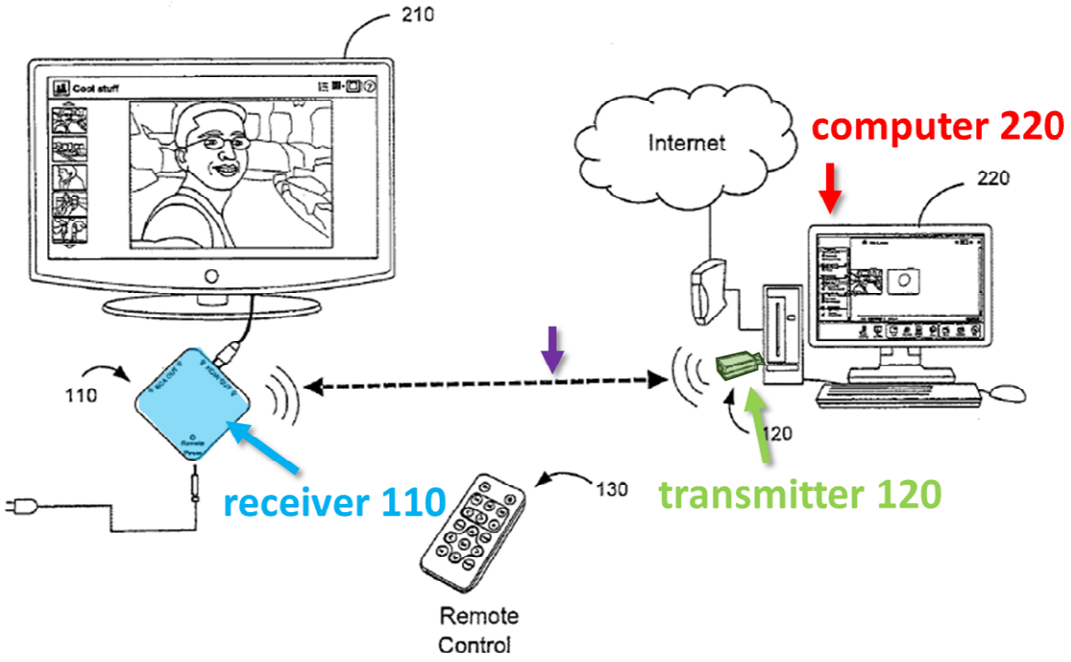

FIG. 2

(EX-1027, FIG. 2.)

100. The method disclosed by Kaplan provided numerous benefits, including: "(1) no cables between the TV and the computer, (2) no need for wireless

network setup or configuration by the user; (3) no complex software installation or online setup; (4) no long delays, video download, or general 'wait time;' and/or (5) completely secure (e.g., no one else can view personal videos)." (EX-1027, ¶–).

D. Deforche (EX-1030)

101. Similar to the '676 patent, Deforche discloses a method of connecting a host computer to a wireless communication network by means of "at least one pre-installed generic driver providing a generic communications protocol (7) for communication between the host computer device and a standard class of computer peripheral devices." (EX-1030, abstract). In particular, Deforche defined a "pre-installed generic driver" as "a driver which is installed on the computer device along with the installation of the operating system, i.e. a driver which is standard for the operating system and which is capable of driving a standard class of computer peripheral devices connected to the computer device without requiring installation of a specific driver….[such as] a human interface device (HID)….[or] a mass storage device (MSD) driver." (*Id.*, ¶0010). These "HID and MSD drivers [were] known per se in the art." (*Id.*).

102. In operation, the "[d]ata traffic from the computer device towards the wireless communication network and vice versa is routed over this modem/host communication interface and uses the generic communication protocol provided by the pre-installed generic driver." (*Id.*, ¶0009). Deforche recognized that this method

provided an advantage to users of avoiding the "need for a specific driver for the communication between the wireless modem device and the computer device" to be downloaded/installed, increasingly important for users with restricted user rights, i.e., user rights do not allow for installation of the necessary driver to the device (*Id.*). A further advantage noted by Deforche in its disclosed method is that the method leaves "zero footprint, i.e. the wireless modem device "leaves no trace … on the computer device." (EX-1030, ¶0016).

E. Hill '557 (EX-1013)

103. Hill '557 discloses a multi-monitor computer system in which a plurality of display devices communicate with a separate computing device using an application to share one device's display to another device. (EX-1013, abstract). As illustrated in Figure 2 (reproduced below), multiple participates of a meeting may wish to share screen content from their own computer with those attending the meeting (either locally or virtually) through a meeting application. (*See* EX-1013, ¶¶0031.) This connection and communication with the other devices may be over wireless communication channels. (*Id.*)

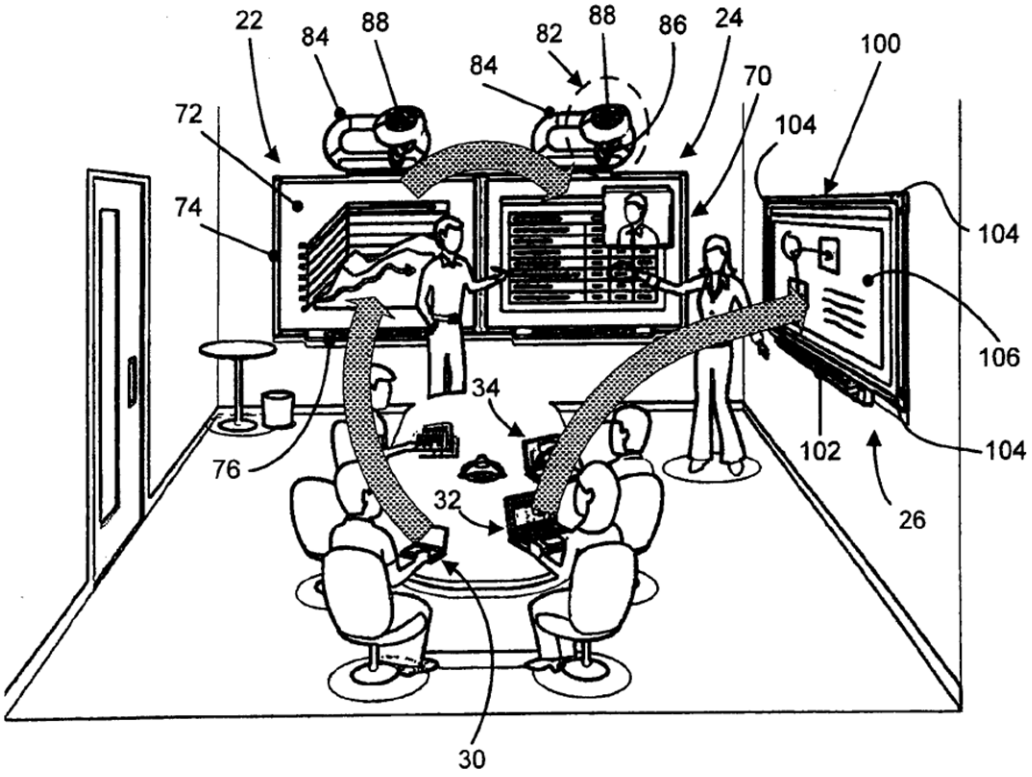

(EX-1013, FIG. 2.)

104. Hill ’557 anticipates that there may be conflicts when multiple participants wish to share their content on the same display and provides multiple approaches depending on the desired context. (*See* EX-1013, ¶¶0048-0049.)

105. Hill ’557 additionally discloses methods for taking control over the display from another user. For example, Hill ’557 discloses that if a share screen icon 182 associated with one of the physical display devices or local or remote computing devices is selected (step 300 in Figure 6), a screen share request is generated and conveyed to the meeting management application running on the central computer 28 causing the meeting management application to perform a check

to determine if any screen is currently being shared (step 302). If a screen is currently being shared, a check is made to determine if the device that generated the screen share request has override status (step 306). If the device that generated the screen share request has override status (e.g. the device is the central computer, is a device associated with a participant having administrative privileges or the conference session is democratic), sharing of the existing screen is terminated (step 308) and the screen associated with the device that generated the screen share request is shared (step 304). (EX-1013, ¶0049.)

F. Banerjee (EX-1021)

106. Similar to the ’676 patent, Banerjee describes a plug-and-play device 236 that physically connects to remote computer 240 and communicates with the master computer 238 over a wireless communications link. (EX-1021, ¶0039.) The “plug-and-play device 236 captures and compresses screen display data generated at the remote computer 240 and allows screen sharing between the remote computer 240 and the master computer 238 by automatically launching software stored on the plug-and-play device 236.” (*Id*.)

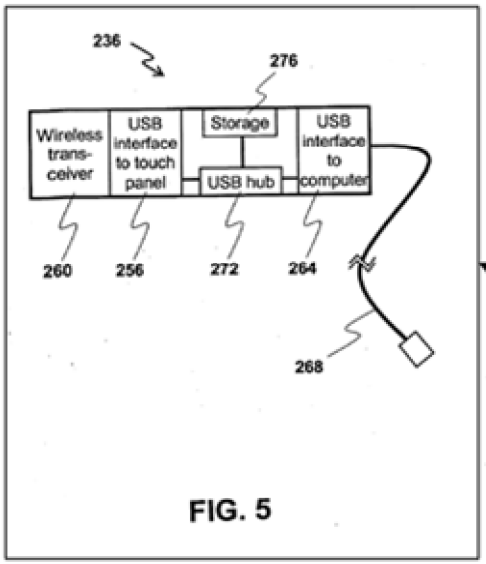

FIG. 5

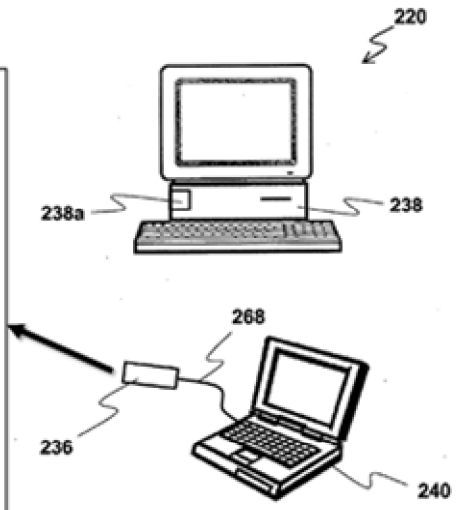

FIG. 4

(EX-1021, FIGs. 4, 5.)

107. Additionally, Banerjee contemplates that communication can be made to multiple remote computers via multiple, respective plug-and-play devices connected to each remote computer. (*Id.*, ¶0052.) Additionally, the master computer 238 may act as a node for transfer of the screen display data to a projection device 244 for display. (*Id.*, ¶0054.)

G. Corbett (EX-1007)

108. Corbett discloses a peripheral device, such as a USB flash drive, that uses a physical USB connection to a host computing system. (EX-1007, ¶0017.) Corbett recognized an issue that a user may wish to transfer data to a separate, external device while the USB flash drive is connected to the host computing system.

(*Id.*, ¶0018.) To solve that issue, Corbett discloses that the USB flash drive can include a transmitter within the flash drive itself "for transmitting data from the computer readable medium 112 to an external device 150." (*Id.*) The transmitter further has the ability to transmit the data to the external device wirelessly. (*Id.*, ¶0020.)

109. Further, Corbett discloses that the user may manually initiate the transmission of the data to the external device. To initiate the transfer, Corbett discloses a "USB flash drive 100 may include a transmission initiation selector 134, such as a button, selector wheel, and the like" which, upon activation, causes the transmitter to transmit all or a portion of the data to the external device. (*Id.*, ¶0023.)

H. Grimshaw (EX-1008)

1. Overview of Grimshaw (EX-1008)

110. Similar to the '676 patent, Grimshaw discloses a communication system that provides audio, video, telephony, presentation and/or other conferencing functions. (EX-1008, ¶0002; EX-1012, 1:4-7.) The system disclosed by Grimshaw uses a "control module 12, user modules 14-20, [and] a display module 22" (*Id.*, ¶0012; EX-1012, 1:23-2:6) to connect users in a meeting, for example, and share media content between each.

111. The control module acts as an information hub for the system and may include "any combination of electronic processing devices, memory devices,

input/output (I/O) devices, and other hardware components." (*Id.*, ¶0013; EX-1012, 2:7-22.) Users of the communication system can "connect a device (e.g., a laptop computer, netbook, PDA, mobile phone, etc.) to one or more of the user modules 14-20." (*Id.*, ¶0023; EX-1012, 7:18-29.) Once connected, "data [can be] exchanged between the laptop computer and the use [sic] module via the data port. This and other information may then be exchanged between the user module and the communication system 10." (*Id.*, ¶0026; EX-1012, 8:10-28.) Grimshaw also discloses that the connection between the laptop computer and the user module and/or between the user module and the communication system may be a wireless port. (*Id.*)

112. The display module connected to the communication system "acts as a visual and/or audio output for communication system 10," and may be a television, projector and/or monitor, but it may be any other suitable display device instead." (*Id.*, ¶0030; EX-1012, 9:29-10:2.) The display module, for example, allows users with a laptop computer to "plug[] into a data port on the user module 14, [so that] the video and/or data signals from that computer are sent to display module 22 so that all meeting attendees can see what is on that particular computer." (*Id.*, ¶0027; EX-1012, 8:29-9:8.) Further, Grimshaw discloses the ability of the users to manually "take control of the display module 22 by respectively engaging buttons 344 . . . which causes switch controller 318 to pass the data signals from the selected

user module on to the display module." (*Id.*, ¶0019; EX-1012, 5:8-24.) The buttons may be "contact or contactless buttons, switches, a touch screen, or any actuator that provides a change of state." (*Id.*, ¶0028; EX-1012, 9:9-20.)

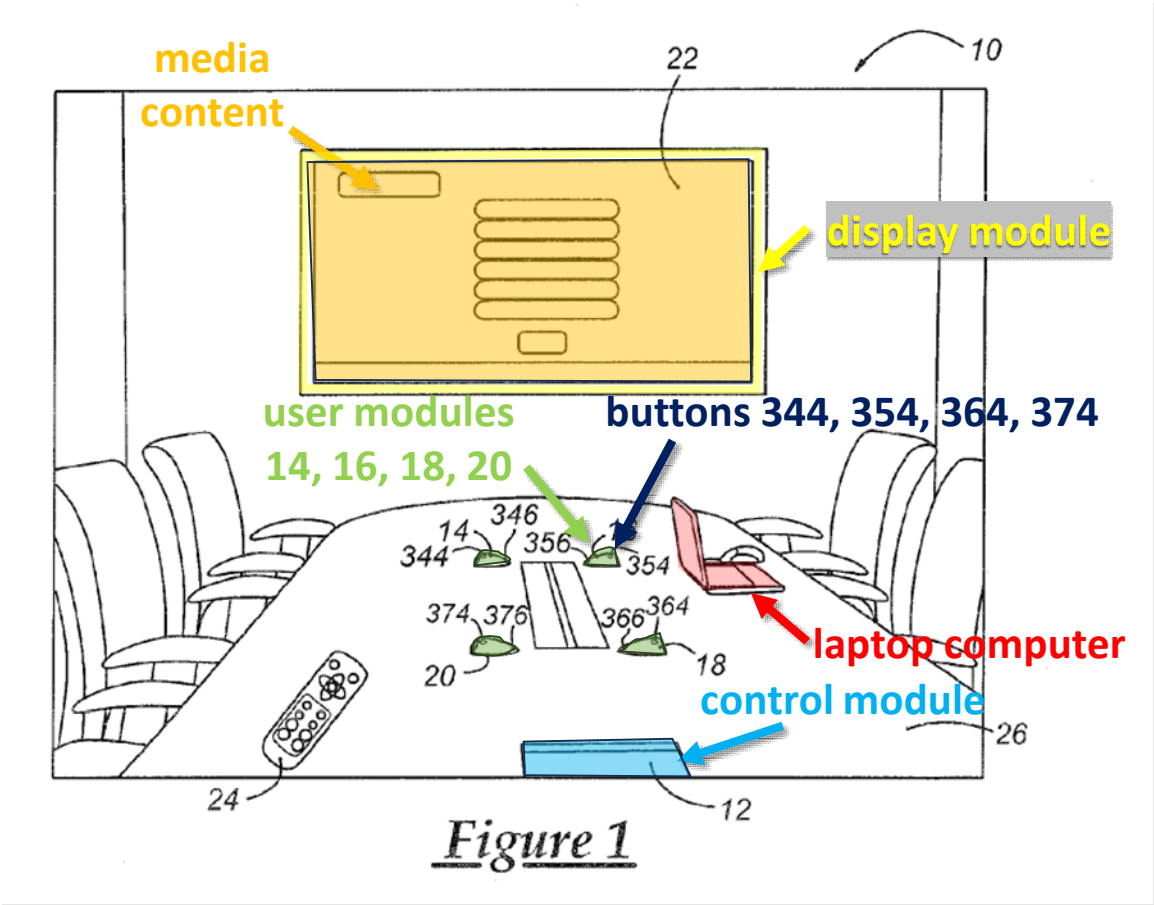

(EX-1008, FIG. 1; *see* EX-1012, FIGs. 1 & 3.)

2. Grimshaw's Claim 1 Support in Provisional Application No. 61/255,326 (EX-1012)

113. I understand that Grimshaw (EX-1008) claims the benefit of provisional application No. 61/255,326 ("the '326 application") filed October 27, 2009 (EX-1012). (*See* EX-1008, Cover (Related U.S. Application Data).) I have

been asked to review the ’326 application to determine whether it provides disclosures sufficient to support the invention claimed in claim 1 of Grimshaw. In my opinion, as I explain below, the ’326 application (EX-1012) provides sufficient disclosure from which a person of ordinary skill in the art would have understood to provide a full and clear description of the invention recited in claim 1 of Grimshaw (EX-1008).

114. Based on my review of the ’326 application, it is my opinion that the drawings/specification of the ’326 application is nearly identical to those of Grimshaw and thus provide the same support for the claims of Grimshaw as the specification of Grimshaw itself. (*Compare generally* EX-1008 with EX-1012.) For example, the chart below provides a summary of exemplary disclosures from the ’326 patent specification, which in my opinion, describes the features recited in claim 1 of Grimshaw.

Grimshaw (EX-1008)	**’326 application (specification) (EX-1012)**
1. A communication system for integration with a piece of furniture, comprising:	*See*, *e.g.*, 1:4-7 (“The present invention generally relates to a ***communication system*** and, more particularly, to a communication system that may provide a combination of audio, video, telephony, presentation and/or other conferencing functions and may be integrated into a piece of furniture such as a conference table.”), 1:13-14, 2:2-5, 15:3-9; Figures 1-3 (communication system 10 ***integrated with a piece of furniture*** 26)

a plurality of user modules,	*See*, *e.g.*, 2:2-5 ("communication system 10 … includes … ***user modules 14-20***"), 15:3-9, Figures 1-3 (user modules 14, 16, 18, 20)
each of the user modules includes a button;	*See*, *e.g.*, 6:2-13 ("a user may engage or push a ***button 344, 354, 364, 374 on their user module*** in order to take control of display module 22 (e.g., display module 22 could show whatever is currently being displayed on the screen of the laptop computer connected to the selected user module)"), 7:26-29, 15:3-9, Figure 3 (button 344, 354, 364, 374 on each user module 14, 16, 18, 20)
a network connection; and	*See*, *e.g.*, 2:29-20, 4:11-5:7 ("during a video-conference call where a combination of audio/video signals are received by control module 12 from an outside network via ***network connection 390*** (receiving capacity)"), 15:3-9, Figure 3 (showing network connection 390)
a control module being electronically coupled to both the user module and the network connection	*See*, *e.g.*, 2:7-22, 4:22-27, 15:3-9, Figure 3 (showing control module 12 electronically coupled to user modules 14, 16, 18, 20 and network connection 390)
wherein activation of a button on a user module causes the control module to give at least some control of the network connection to the user module with the activated button.	*See*, *e.g.*, 5:16-19; 6:2-27; 8:29-9:7 ("[I]f a user presses or otherwise ***engages button 344 on user module 14***, then communications system 10 (more specifically, controller 324 and switch controller 318) [i.e., components of the control module] ***gives control*** of display module 22 to user module 14. Thus, if the user has a laptop computer plugged into a data port on user module 14, the video and/or data signals from that computer are sent to display module 22 so that all meeting attendees can see what is on that

	particular computer. ***Likewise***, ***audio, video and/or data signals may be sent to an outside network via network connection 390***, so that remote meeting attendees may follow along as well."); 13:8-14:8, 15:3-9, Figure 4

115. Accordingly, as explained above, it is my opinion that the '326 application (EX-1012) provides a clear description of the limitations recited in claim 1 of Grimshaw (EX-1008). In support of my opinions below regarding Grimshaw, I provide citations to both Grimshaw (EX-1008) and the '326 application (EX-1012) to demonstrate how both provide the disclosures that correspond to the features recited.

IX. THE PRIOR ART DISCLOSES AND/OR SUGGESTS THE RECITED FEATURES OF CLAIMS 1– OF THE '676 PATENT

A. Ground I – Ono and Deforche Disclose and/or Suggest the Features of 1, 5, 8, 18 and 20

1. Rationale to combine

116. It is my opinion that Ono and Deforche disclose similar systems for sending information wirelessly. (EX-1005, ¶¶2, 53-55; EX-1030, ¶¶9, 30). These systems would have required an operating system, such as the ubiquitous Windows operating system as discussed by Deforche. (EX-1030, ¶¶9, 30). Windows was well known to include standard USB drivers for various classes of devices, including USB mass storage and human-interface devices. (*Id.*). A driver is a term for a special form of software that provides an interface between hardware and application-level

software, and is standard in all personal computers. Ono likely relied on such drivers but did not expressly state so, but Deforche does. (*Id*.). It is therefore my opinion that it would have been obvious that Ono would or at least could have used similar well-known pre-installed generic Window's drivers, as disclosed by Deforche to enable Ono's USB peripheral devices. The combination of Ono and Deforche would have been nothing more than a predictable way of implementing Ono's system.

2. Claim 1

117. The combined teachings of Ono and Deforche (along the knowledge of a person of ordinary skill in the art) disclose and/or suggest the limitations of claim 1, as a whole. I have been asked to assume the preamble of claim 1 is limiting for the purposes of my analysis. If the preamble is not limiting, it would not affect my analysis for the body of the claim (limitation 1(b)-1(m)) below.

a. Limitation 1(a): A method for connecting one or more processing devices … to a wireless communications network having a base node with one or more first displays

118. To the extent limiting, Ono teaches limitation 1(a). For example, Ono discloses a method for connecting one or more information terminal apparatus 2A, 2B, 2C (*e.g.*, "processing devices") to a wireless network having an image display apparatus 1 (*e.g.*, a "base node") with a projector 50 and screen 5 (*e.g.*, "one or more

first displays").[4] (*See*, *e.g.*, EX-1005, ¶¶0036 ("The image display system 10 is a system that makes up a wireless network by connecting an image display apparatus 1 and three information terminal apparatuses 2A, 2B and 2C to a wireless communications channel."), 0037-0041, FIGs. 1 (reproduced below), 2 (illustrating the wireless network), 9 (illustrating a method connecting via the network), 13 (illustrating a method of switching connections between information terminal apparatus 2A, 2B); *see also* Figures 16 and 17 (illustrating a similar embodiment but with an access point AP 3).)

4 My identification of structure corresponding to the claim elements is exemplary only. Additional or alternative components could be identified. For example, projector 50 might alternatively be identified as a "base node" with a "first display." Similarly, Ono teaches alternatives to the projector and screen as an image display apparatus and hence a "first display." (See EX-1005, ¶0162.)

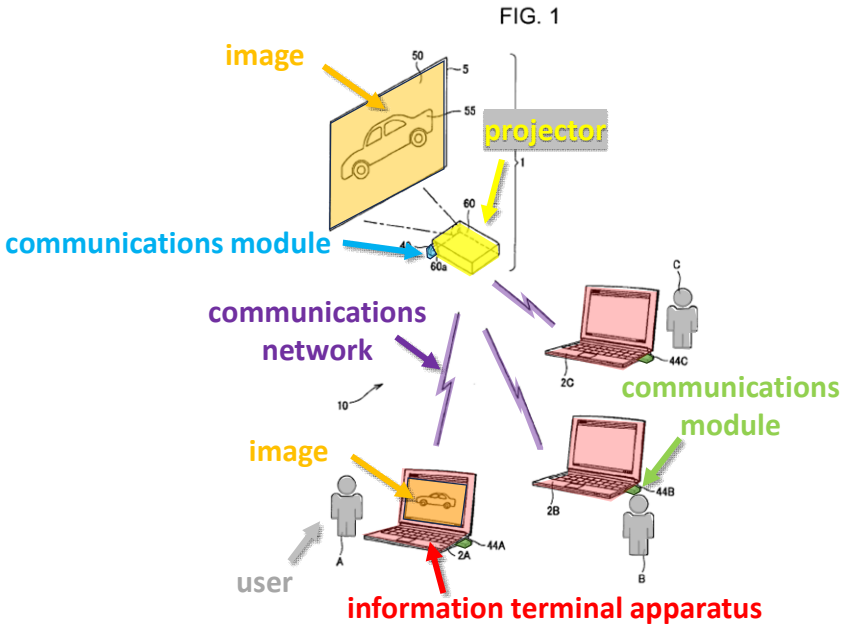

(EX-1005, FIG. 1.) *See also* EX-1001, 29:54-60 (explaining that a projector can be a base node).

b. Limitation 1(b): each processing device being a user device of one participant in a meeting with a plurality of participants

119. To the extent limiting, Ono teaches limitation 1(b). For example, Ono discloses each information terminal apparatus 2A, 2B, 2C (*e.g.*, "processing device") may be, for example, personal computers (PCs) (*e.g.*, a "user device"). (EX-1005, ¶0039.) A POSITA would have understood from Ono that each PC may be for one participant (*e.g.*, a presenter) in a meeting with a plurality of participants. (*See*, *e.g.*, EX-1005, ¶0144 ("Further, since, just through operations from the remote controller 69 of the image display apparatus 1, it is possible to switch the information terminal apparatus whose image is to be projected onto the screen 5, even in cases where, for

example, there are a plurality of presenters to present in a given order, it becomes unnecessary for each presenter, in accordance with the order, to perform an output on/off operation at each information terminal apparatus, and therefore, the gap in time until the next presentation is eliminated, and presentations can be conducted speedily."), 0161, FIGs. 1, 16.)

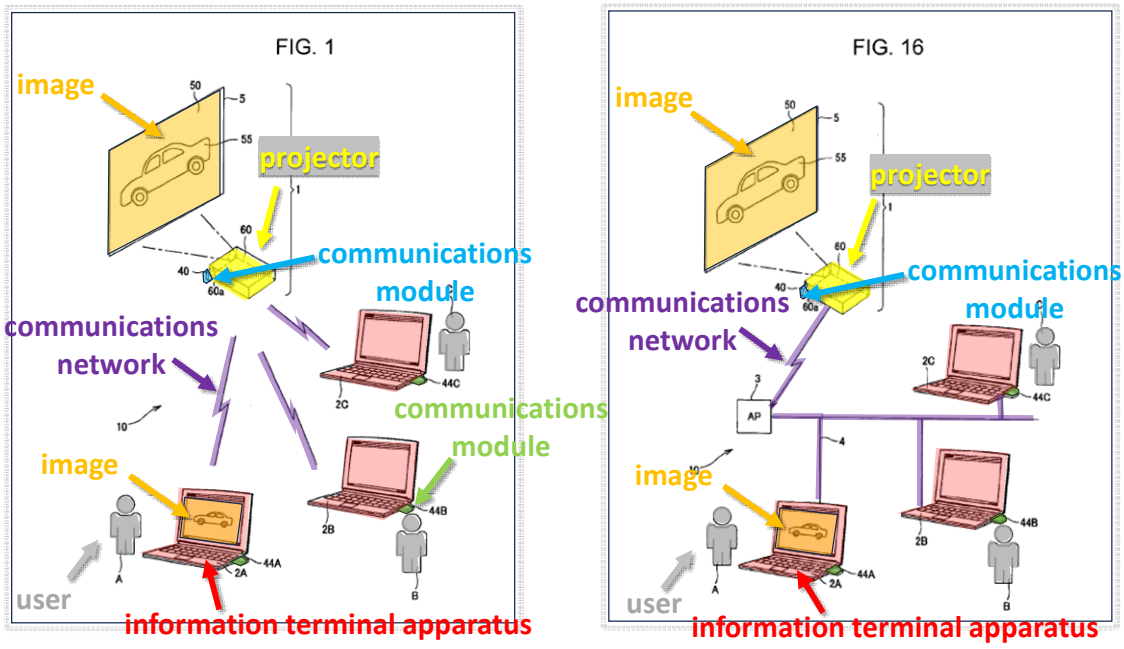

(EX-1005, FIG. 1, 16)

c. Limitation 1(c): the one or more processing devices each having a memory, a second display and an operating system with at least one pre-installed generic driver providing a generic communications protocol for communication between the processing device and a class of peripheral devices

120. To the extent limiting, Ono and/or Deforche teaches limitation 1(c). For example, Ono discloses each information terminal apparatus 2A, 2B, 2C (*e.g.*,

"processing devices"), each having a hard disk drive (HDD) 24 and random access memory (RAM) 25 (*e.g.*, a "memory"), a liquid crystal display device (LCD) 21 (*e.g.*, a "second display"). (*See*, *e.g.*, EX-1005, ¶¶0050, 0073 ("FIG. 7 is a diagram showing a hardware configuration of the information terminal apparatus 2A (2B and 2C are also similar). A hard disk drive (HDD) 24 and a random access memory (RAM) 25 are connected to a CPU 20 via a bus 23. ... Further, an LCD controller 30 for controlling a liquid crystal display apparatus LCD 21 which is the above-mentioned display section of its own, and an I/F 31 for interfacing an input operation section 22 such as a keyboard or a mouse are connected to the CPU 20 via the bus 23. In addition, it is assumed that image information to be sent out to the image display apparatus 1 is selected and displayed on the liquid crystal display apparatus LCD 21."), 0074, FIGs. 1 & 7.)

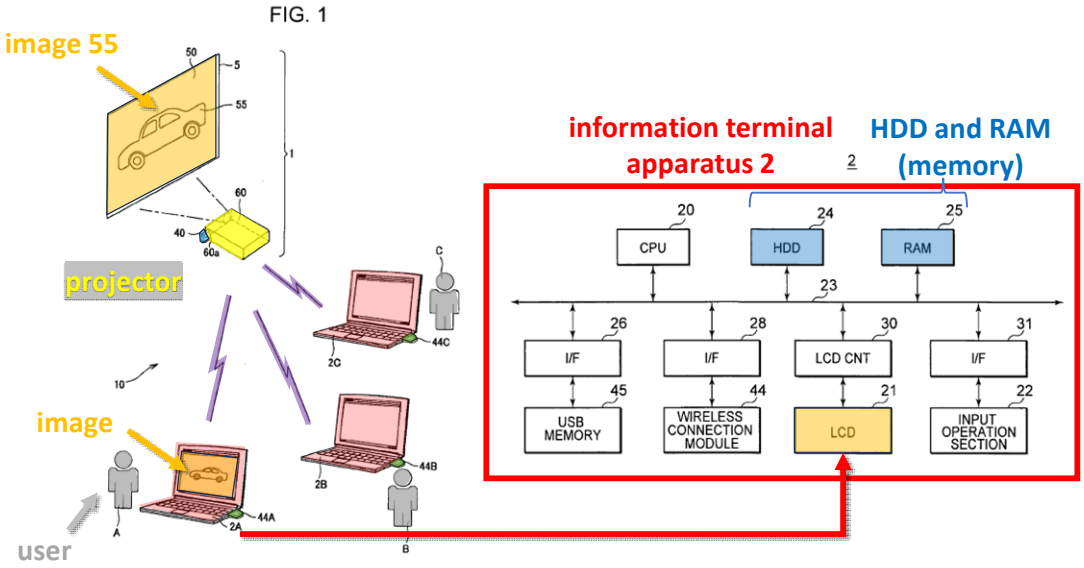

(EX-1005, FIGs. 1 & 7.)

121. A POSITA would have understood information terminal apparatus 2A, 2B, 2C (for example as personal computers) to include an operating system with standard drivers (such as USB mass storage drivers) to communicate with peripheral devices, like USB memory 45 via interface 26. (EX-1005, ¶¶0053-0055, 0058, 0060-0062, 0073, 0076, 0088, FIG. 7; *see also* EX-1006, ¶0133, EX-1026, ¶0001.)

122. A POSITA would have also recognized that operating systems, such as Microsoft Windows® had standard USB drivers with corresponding communication protocols to interface with peripheral devices, such as a keyboard or USB flash drive. (*See, e.g.*, EX-1021, ¶¶0003-0004; EX-1026, ¶0001 ("Universal Serial Bus (USB) standard provides communication protocols for interfacing between a host and its peripheral devices. For example, a personal computer implementing the Microsoft

Windows® operating system may use the USB standard for communicating with a key board, a compact disc (CD) player, or a USB flash drive. The USB standard may also be implemented in Macintosh® and Linux® operating systems."); EX-1030, ¶0010.)

123. A POSITA would have understood standard USB drivers were used for communication between the computer and a class of peripheral devices. (EX-1030, ¶0010 ("'[P]re-installed generic driver' is intended to mean a driver which is installed on the computer device along with the installation of the operating system, i.e. a driver which is standard for the operating system and which is capable of driving a standard class of computer peripheral devices connected to the computer device without requiring installation of a specific driver for such a computer peripheral device. An example of such a generic driver … a mass storage device (MSD) driver, which has predetermined software components configured for driving mass storage devices such as USB memory sticks.... MSD drivers are known per se in the art.").)

124. Thus, a POSITA would have understood that Ono's information terminal apparatus 2A, 2B, 2C (as personal computers) include an operating system with at least one already installed driver, such as a USB driver, which provides a standard communications protocol for communication between the processing device and is generic at least for a class of peripheral devices, such as mass storage

devices. At least in this sense, Ono describes a "pre-installed generic driver" providing a "generic communications protocol" for communication between the processing device and a class of peripheral devices as was well known in the art. (*See*, *e.g.*, EX-1021, ¶¶0003 ("Plug-and-play devices are well known… the most common being USB."), 0004 ("Many operating systems possess a number of pre-loaded drivers for generic plug-and-play device classes, such as USB mass storage…."); EX-1026, ¶¶0001-0003 ("USB flash drives belong to the USB mass storage device class."); EX-1027, ¶¶0045, 0058-0059; EX-1030, ¶¶0010, 0028-0030, 0034-0041, 0052.) This is also consistent with the description of a "pre-installed generic driver" in the prior art and in the '676 patent and. (*Compare* EX-1001, 14:20-34 (describing a "pre-installed generic driver") *with* EX-1030, ¶0010 (describing a "pre-installed generic driver").

d. Limitation 1(d): the method comprising the following steps for each processing device: coupling a peripheral device to the processing device

125. Ono and/or Deforche disclose and/or suggest this limitation. For example, Ono discloses coupling (via a USB slot) each wireless communication module 44A, 44B, 44C (*e.g.*, "peripheral device") of information terminal apparatuses 2A, 2B and 2C (*e.g.*, "a user processing device"). (*See*, *e.g.*, EX-1005, ¶¶0054 ("The image display apparatus 1 may come with the wireless connection module 44 of a USB (Universal Serial Bus) type, for the information terminal

apparatus 2A,"), 0055 ("[I]f the user inserts the wireless connection module 44 into the USB jack (slot) on the information terminal apparatus 2A, connection configuration for the wireless network will be completed…."), 0062 ("[I]nserting the plurality of wireless connection modules 44 into the respective other USB jacks, the user of the image display apparatus 1 may connect the image display apparatus 1 and the plurality of information terminal apparatuses 2A, 2B and 2C to the wireless network."), FIGs. 1, 4, 16.)

e. Limitation 1(e): the peripheral device having a wireless transceiver

126. Ono and/or Deforche disclose and/or suggest this limitation. For example, Ono discloses that, in addition to wirelessly transmitting image information to the projector 60, wireless communication modules 44A, 44B, 44C (*e.g.*, a "peripheral device") are capable of "transmitting and receiving request signals, response signals, rejection signals and the like for the connection and disconnection of communications with the communications module 40 of the projector 60." (*See*, *e.g.*, EX-1005, ¶¶0039, 0083-0090 (describing wirelessly transmitting to and receiving signals from communications module 40), FIGs. 1, 4, 9.) Hence, wireless communication modules 44A, 44B, 44C perform the function of a transceiver (*i.e.*, wireless transmission and reception of signals) and would have been consider by POSITA to include a wireless transceiver. Further, a POSITA

would have understood such communication modules to include a transmitter as necessary means for wireless transmission (particularly, using a Direct Sequence Spread Spectrum modulation technique). (*See* EX-1005, ¶0037 ("The wireless communications channel is one that utilizes a transmission path other than a wire cable, such as radio waves…. For example, there are wireless communications, such as those for Direct Sequence Spread Spectrum (DSSS) wireless communications, which utilize the 2.4 GHz ISM (Industrial, Scientific and Medical) band which is the same as that adopted in wireless LAN (WLAN) communications compliant with the IEEE 802.11 specifications. These are referred to as Bluetooth.").)

127. Notably, Ono discloses another communication module 40 includes an antenna and chip for wireless transmission and that communication module 44 performs a similar function of wireless transmission. (*See, e.g.*, EX-1005, ¶¶0052 ("This wireless connection module 40 may be of a CF (Compact Flash) card type including an antenna and a transmission/reception chip…. More specifically, transmission data is sent from a CPU, described later, to a baseband processing section via a communications control section or an I/F section, signal processed at the baseband processing section, impressed upon a carrier wave at an RF processing section, and wirelessly transmitted to a device in its vicinity from the wireless communications antenna. On the other hand, radio waves wirelessly transmitted from devices in the vicinity are communicated to the CPU described later via the

communications control section or the I/F section after being received by the local wireless communications antenna, having signals extracted at the RF processing section, and being signal processed at the baseband signal processing section.”), 0054 (“[T]he wireless connection module 44 [is] of a USB (Universal Serial Bus) type, … having functions similar to those of the wireless connection module 40.”).) Thus, a POSITA would have immediately envisioned communication module 44 (which communicates with communication module 40 to be similarly structured and would include a transceiver.

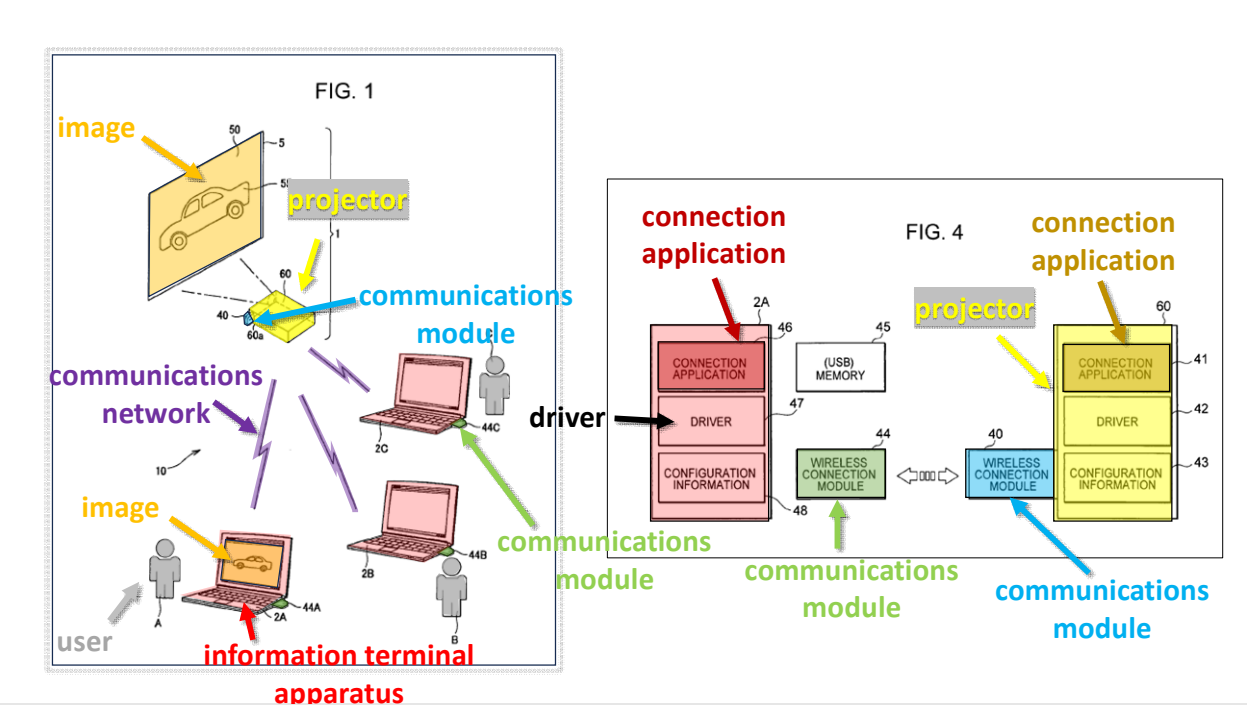

(EX-1005, FIGs. 1 and 4.)

f. Limitation 1(f): setting up, by means of the pre-installed generic driver of the operating system, a means for communication between the peripheral device and the processing device

128. The combination of Ono and Deforche disclose and/or suggest this limitation. For example, Ono discloses setting up communication between the wireless communications module 44 (*e.g.*, the "peripheral device") and information terminal apparatus 2 (*e.g.*, the "processing device") such that, when wireless communications module 44 is inserted into information terminal apparatus 2, the two devices can communicate via interface 28. (*See, e.g.*, EX-1005, ¶¶0055 ("In order to connect the projector 60 of the image display apparatus 1 and the information terminal apparatus 2A to the wireless network, the user clicks on a set-up file with a mouse after plugging the USB memory 45 in a USB jack on the information terminal apparatus 2A. As a result, an installer will automatically be activated on the information terminal apparatus 2A, and the connection application 46, the driver 47 and the configuration information 48 will automatically be stored in the HDD (Hard Disk Drive). Then, if the user inserts the wireless connection module 44 into the USB jack (slot) on the information terminal apparatus 2A, connection configuration for the wireless network will be completed, and transmission and reception of data with the projector 60 of the image display

apparatus 1 that is already running will be carried out via the wireless network."), 0062, 0076.)

129. Beyond Ono's disclosure and for many of the same reasons just discussed, operating systems commonly included drivers, such as USB driver already stored and installed with the operating system. Such a USB driver, such as a USB mass storage device driver, stored on information terminal apparatus (PC) 2 would have allowed the PC to recognize and communicate at least with Ono's USB memory 45 (*i.e.*, a mass storage device) according to a standard USB communication protocol. (*See, e.g.*, Ex. 2021, ¶¶0003-0004; EX-1026, ¶¶0001-0003; EX-1027, ¶¶0058-0059; EX-1030, ¶¶0010, 0028-0030, 0034-0041, 0052.)

130. It is my opinion that, a POSITA looking to implement an image display system like that described by Ono would have been motivated utilize drivers that were already installed on an operating system, such as USB drivers, to communicate with USB-type devices like communication module 44 suggested by the prior art. (*See, e.g.*, EX-1027, ¶0045 (explaining the ubiquity of and suitability the USB standard for a dongle in wireless communication applications); EX-1030, FIG. 2, ¶¶0009, 0028-0030, 0034 (explaining the desire to avoid the use of having to install drivers and promoting the use of existing USB class drivers, such as USB human interface device (HID) or mass storage device class drivers, "available in the most common operating systems (OS)).) "An advantage is the ease of use of e.g. USB

modem products which can even be allowed usage in restricted conditions." (EX-1030, ¶0028.)

131. Therefore, a POSITA would have been motivated by the ubiquity and ease of use of a USB interface to set up by means of a USB drive, such as a USB mass storage driver, a USB interface (such as I/F 28) between a processing device (like information terminal apparatus 2) and a peripheral device (like Ono's wireless communications module 44) using a USB communication protocol. A POSITA would have had a reasonable expectation of success in implementing such well-known technology, as evidenced by the teachings of Deforche, for example. See my further discussion below regarding limitation 1(h).

FIG. 7

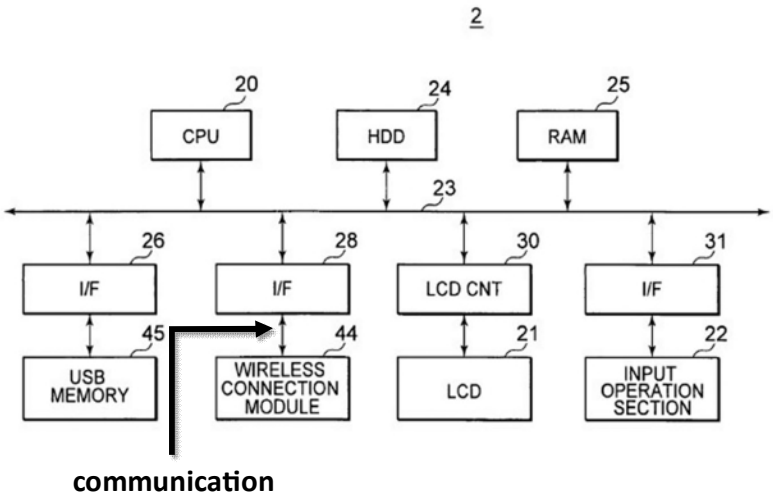

(EX-1005, FIG. 5.)

132. As discussed in Section VII, I have been asked to assume that "the means for communication" refers to an interface using "the generic communication protocol." In this regard and as discussed above, wireless communications module 44 communicated with the information terminal apparatus via an interface (I/F) 26 that conforms to the USB standard, and thus a POSITA would have recognized that it employs the ubiquitous USB standards and protocols for communicating between an information terminal apparatus 2 and a wireless communication module 44. (EX-1026, ¶0001; EX-1027, ¶0045; EX-1030, FIG. 2, ¶¶0009, 0028-0030, 0034.) A POSITA also would have recognized that making use of a pre-installed USB driver (as suggested by Deforche and discussed in the preceding sections) would setup communications using a corresponding USB protocol. (*Id.*) Therefore, a POSITA naturally would have been motivated to implement a standard USB protocol in communicating with a wireless communications module across an interface (like Ono's I/F 26). A POSITA would have had a reasonable expectation of success in that implementation because USB standards were well known and ubiquitous.

g. Limitation 1(g): coupling the processing device to the wireless communications network via the peripheral device

133. Ono and/or Deforche disclose or suggest this limitation. For example, Ono discloses coupling the information terminal apparatus 2A, 2B and 2C (*e.g.*, each a "processing device") to the wireless communications network via a respective

wireless connection module 44A, 44B, 44C (*e.g.*, "peripheral device"). (*See*, *e.g.*, EX-1005, ¶¶0035, 0039-0042 ("[I]mage information that is sent from the above-mentioned three information terminal apparatuses 2A, 2B and 2C via the network…."), 0050-0055 ("[I]f the user inserts the wireless connection module 44 into the USB jack (slot) on the information terminal apparatus 2A, connection configuration for the wireless network will be completed, and transmission and reception of data with the projector 60 of the image display apparatus 1 that is already running will be carried out via the wireless network."), 0061 ("The information terminal apparatuses 2B and 2C are connected to the wireless network in a manner similar to the information terminal apparatus 2A."), 0056-0057, 0062 ("Thus, by … inserting the plurality of wireless connection modules 44 into the respective other USB jacks, the user of the image display apparatus 1 may connect the image display apparatus 1 and the plurality of information terminal apparatuses 2A, 2B and 2C to the wireless network), 0068, 0076, 0088, 0144, FIGs. 1, 2 (schematically showing a wireless network system including the projector 60 and the three information terminal apparatuses 2A, 2B and 2C), 16.)

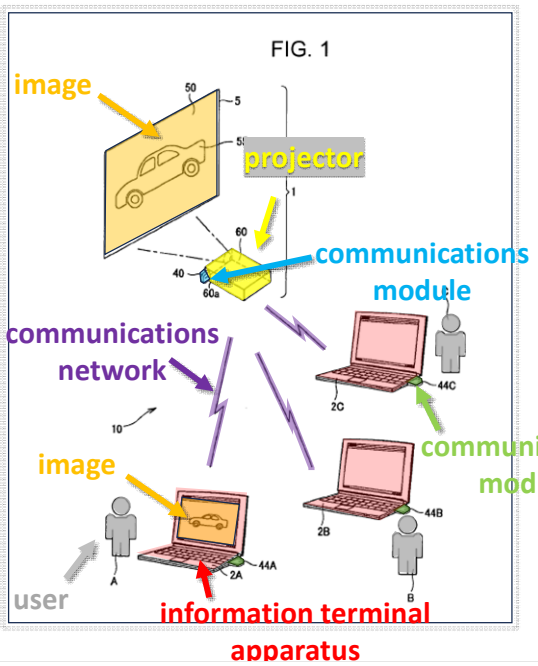

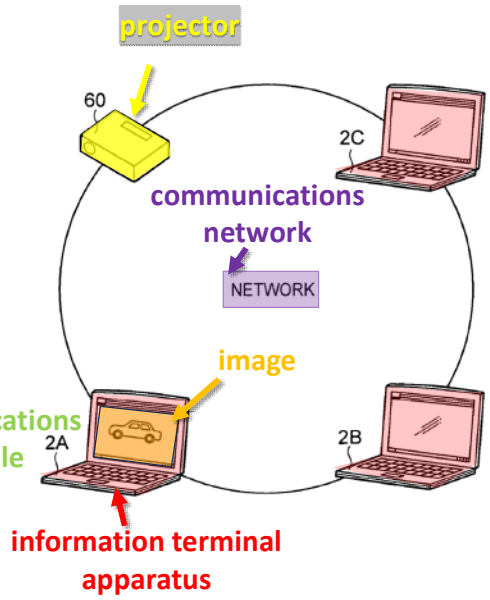

(EX-1005, FIGs. 1 and 2.)

h. Limitation 1(h): running a client application stored on the peripheral device to obtain screen scraped data

134. The combination of Ono and Deforche disclose and/or suggest this limitation. For example, Ono discloses running a client application stored on USB memory 45 (a peripheral device) to obtain screen scraped data. (*See*, *e.g.*, EX-1005, ¶¶0041-, 0054, 0055, 0058, 0073 ("[I]mage information to be sent out to the image display apparatus 1 is selected and displayed on the liquid crystal display apparatus LCD 21."), 0076, 0088 ("[T]he CPU 20 of the selected information terminal apparatus 2A transmits the image information signal displayed on the liquid crystal display apparatus 21 to the wireless connection module 40 of the projector 60 from the wireless connection module 44 via the I/F 28."), 0144, FIG. 1.) While a POSITA

would have recognized from Ono's disclosures that the content of the transmitted image data is "screen scraped data," a POSITA looking to implement a system like Ono, particularly such that the image data from a display (*e.g.*, LCD 21) of the information terminal apparatus is transmitted and displayed on projection screen (*e.g.*, as illustrated in Ono's Figure 1), would have considered and utilized well-known screen scraping algorithms. Indeed, the '676 patent acknowledges that screen scraping was known in the art (EX-1001, 13:59-62) and could have been predictably implemented in an image display system like that of Ono using known techniques, for instance, as described in Slobodin, which is directed to wireless transmission of screen scraped data to a projector (*see*, *e.g.*, EX-1033, ¶¶0011-0012).

135. Further, Ono discloses that "the image display apparatus 1 may come with a USB memory 45 in which a connection application 46, a driver 47 and configuration information 48 … are stored." (EX-1005, ¶ 0054.) (EX-1005, ¶¶0055 ("In order to connect the projector 60 of the image display apparatus 1 and the information terminal apparatus 2A to the wireless network, the user clicks on a set-up file with a mouse after plugging the USB memory 45 in a USB jack on the information terminal apparatus 2A. As a result, an installer will automatically be activated on the information terminal apparatus 2A, and the connection application 46, the driver 47 and the configuration information 48 will automatically be stored in the HDD (Hard Disk Drive). Then, if the user inserts the wireless connection

module 44 into the USB jack (slot) on the information terminal apparatus 2A, connection configuration for the wireless network will be completed, and transmission and reception of data with the projector 60 of the image display apparatus 1 that is already running will be carried out via the wireless network."), 0076; FIGs. 1 and 4.)

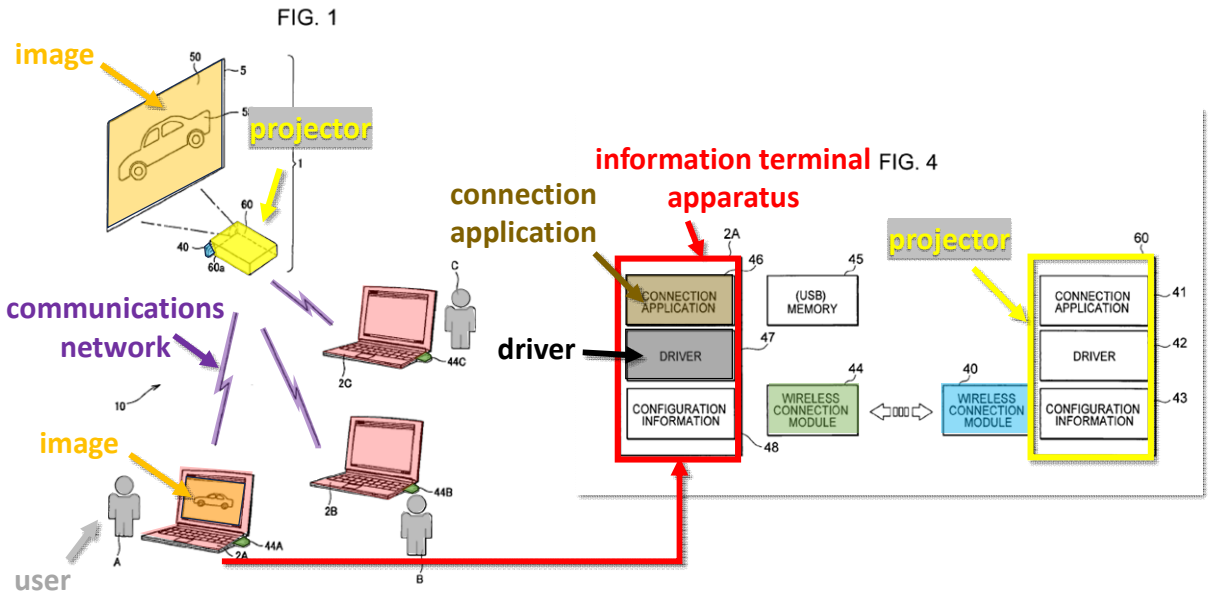

(EX-1005, FIGs. 1 and 4.)

136. Although Ono's connection application 46, a driver 47 and configuration information 48 are described in one embodiment as stored on a USB memory 45 (as opposed to USB-type wireless information communications module 44), at the time of the alleged invention in 2011, the location of storage of that information would have been simply a matter of design choice. In 2011, a POSITA

could have readily combined the memory storage capability of a USB memory device (like USB memory 45) and the wireless transceiver functionality (like that of information communications module 44) into a single device.

137. Deforche teaches that Ono's running an application stored on the peripheral device itself rather than on a separate USB mass storage device. EX-1030, FIG. 2, ¶¶9, 34, 46, 52.; EX-1002, ¶¶xxx). It is my opinion that where the program is stored is simply a matter of design choice. Moving the program from a separate USB device to a similar USB device could include simply writing the program to another device, or adding or including a larger memory chip in the peripheral device. The person of ordinary skill in the art would have a reasonable expectation of success because adding chips to devices was well-known, particularly for simple devices such as USB dongles relative to much more complicated PCs, which have many more chips than USB peripheral devices. Therefore, it is my opinion that the combination of Ono and Deforche would have predictably resulted in moving the client application from one device to another.

i. Limitation 1(i): routing the screen scraped data between the processing device and the wireless communications network via the means for communication for display on the one or more first displays of the base node

138. Ono and Deforche disclose and/or suggest this limitation. For example, Ono discloses routing image data from LCD 21 (*e.g.*, "screen scraped data") between

each information terminal apparatus 2A, 2B, 2C (*e.g.*, "processing device") and the wireless network for display on a display of the image display apparatus 1 (*e.g.*, a "base node"). (*See*, *e.g.*, EX-1005, ¶¶0039, 0041-0042, 0054 (explaining that wireless connection module 44 is "of a USB (Universal Serial Bus type"), 0055, 0073, 0076, 0088 ("[T]he CPU 20 of the selected information terminal apparatus 2A transmits the image information signal displayed on the liquid crystal display apparatus 21 to the wireless connection module 40 of the projector 60 from the wireless connection module 44 via the I/F 28."), 0162 (describing alternative displays).)

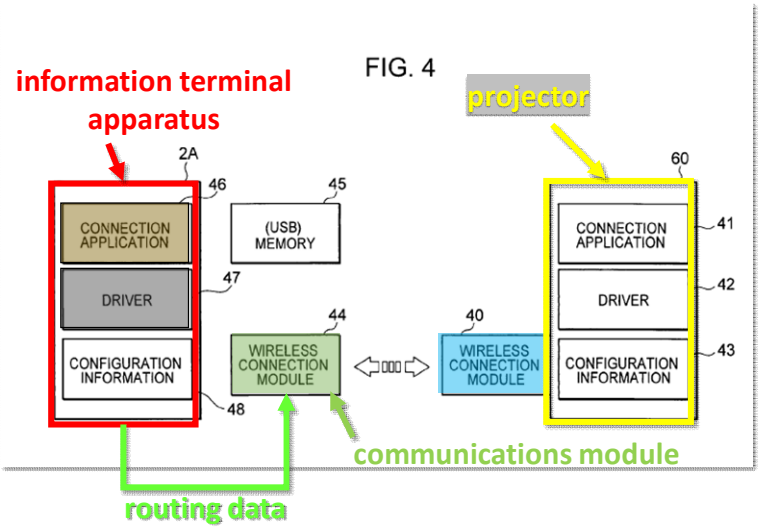

(EX-1005, FIG. 4.)

139. As discussed in Section VII (Claim construction), I have been asked to assume that "the means for communication" refers to an interface using "the generic communication protocol." In this regard and as discussed above, wireless communications module 44 communicated with the information terminal apparatus via an interface (I/F) 26 that conforms to the USB standard, and thus a POSITA would have recognized that it employs the ubiquitous USB standards and protocols for communicating between an information terminal apparatus 2 and a wireless communication module 44. (EX-1005, ¶¶0039, 0041-0042, 0054-0055, 0073, 0076, 0088 ("[T]he CPU 20 of the selected information terminal apparatus 2A transmits the image information signal … from the wireless connection module 44 via the I/F 28"); see also EX-1026, ¶0001; EX-1027, ¶0045.) A POSITA also would have recognized that making use of a pre-installed USB driver (as suggested by Deforche and discussed in the preceding sections) would setup communications using a corresponding USB protocol. (*Id*.) Therefore, a POSITA naturally would have been motivated to implement a standard USB protocol in communicating with a wireless communications module across an interface (like Ono's I/F 26). A POSITA would have had a reasonable expectation of success in that implementation because USB standards were so well known and ubiquitous.

j. Limitation 1(j): wherein the generic communication protocol is used for transferring the screen scraped data for display between the processing device and the peripheral device

140. It is my opinion that my analysis of limitations 1(c)-(d) and (f)-(i), below, explain this limitation.

k. Limitation 1(k): obtaining electronic access to the one or more first displays for display of the screen scraped data

141. Ono and/or Deforche disclose and/or suggest this limitation. For example, Ono discloses connecting (*e.g.*, obtaining electronic access) to the projector 50 and screen 5 (*e.g.*, "one or more first displays") for display of the image data (*e.g.*, screen scraped data). (*See*, *e.g.*, EX-1005, ¶¶0035, 0039-0042, 0050-0055 ("[I]f the user inserts the wireless connection module 44 into the USB jack (slot) on the information terminal apparatus 2A, connection configuration for the wireless network will be completed, and transmission and reception of data with the projector 60 of the image display apparatus 1 that is already running will be carried out via the wireless network."), 0061, 0056-0057, 0062, 0076, 0088, 0144, FIGs. 1, 9; *see also* Section IX.A.2.a (discussing limitation 1(a).).)

l. Limitation 1(l): displaying the screen scraped data on the one or more first displays in accordance with a set of rules

142. Ono and/or Deforche disclose and/or suggest this limitation. For example, Ono discloses displaying the screen scraped data on the one or more first

displays in accordance with a set of rules. (*See, e.g.*, EX-1005, ¶¶0041, 0078 ("When the user selects from the list 71 the information terminal apparatus. S/he wants to connect with by pressing the up or down selection key on the operation section of the remote controller 69 and presses the confirm (enter) key, the image display apparatus 1 connects with the selected information terminal apparatus."), 0082-90, 0112-0126, FIGs. 1, 3, 9, 13; see also my discussion in Section IX.A.2.h (discussing limitation 1(h)).)

FIG. 3

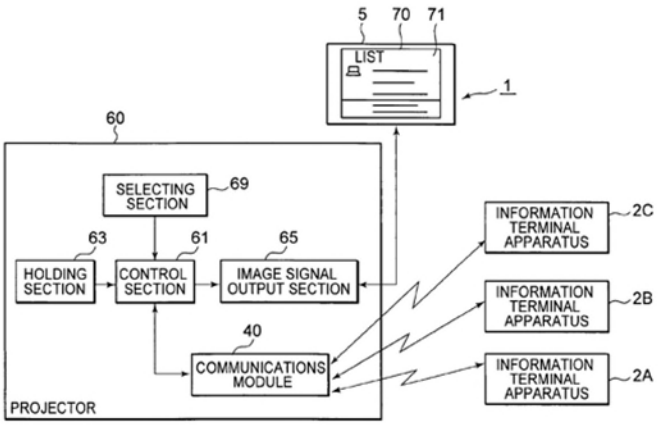

FIG. 1

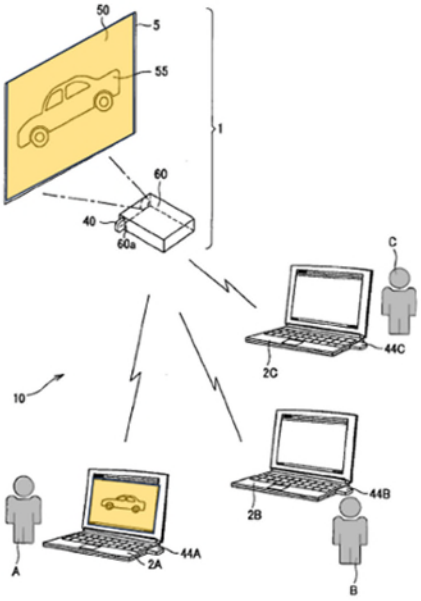

(EX-1005, FIGs. 1, 3.)

m. Limitation 1(m): one of the rules being a forcing rule, wherein the forcing rule is that display on the one or more first displays of new screen scraped data is obtained by the action of only one participant involved in the meeting, without requiring the agreement of another participant, the new screen scraped data of any participant for display overrides or replaces any data displayed on the one or more first displays from the same or another participant of the meeting

143. Ono discloses and/or suggests this limitation. For example, as discussed in the Background Section above, Ono discloses one of the rules being a forcing rule, wherein the forcing rule is that display on the one or more first displays of new screen scraped data is obtained by the action of only one participant involved in the meeting, without requiring the agreement of another participant, the new screen scraped data of any participant for display overrides or replaces any data displayed on the one or more first displays from the same or another participant of the meeting.

144. Ono discloses using a remote controller 69 to select an information terminal apparatus (2A, 2B, etc.) to display an image 55 based on the image data from the display (LCD 21) of the apparatus. Thus, through operations using the remote controller 69, the image display system 10 is capable of switching among a plurality of PCs connected to a network and selecting the display content from the desired PC to be displayed on projection screen 5 "with ease." (EX-1005, ¶0144.)

> Further, since, *just through operations from the remote controller 69* of the image display apparatus 1, it is possible to switch the information terminal apparatus whose image is to be projected onto the screen 5, even in cases where, for example, there are a plurality of presenters to present in a given order, *it becomes unnecessary for each presenter*, in accordance with the order, *to perform an output on/off operation at each information terminal apparatus*, and therefore, *the gap in time until the next presentation is eliminated*, and presentations can be *conducted speedily*. (EX-1005, ¶0144.)

Hence, Ono "forces" switching of display by the action of only one participant involved in the meeting (*i.e.*, the user of the remote controller) and understandably new screen data from the information terminal apparatus overrides or replaces any data displayed on the display module without requiring the agreement of another participant.

145. In particular, Ono discloses rules for a remote controller to switch among PCs wirelessly connected to a projector. (EX-1005, ¶¶0007, 0036-0039, 0064-0070, 0077-0078, 0144, FIGs. 1, 3.) Ono's system describes an image display apparatus capable of switching among a plurality of networked information terminal apparatuses 2A, 2B, 2C (e.g., personal computers (PCs)) and selecting a desired PC for displaying its screen content on a larger shared projection screen 5. (*Id.*) As Ono illustrates below in Figures 1 and 3, the user simply presses a button on the remote controller 69, which brings of a list 71 of the connected PCs. Ono explains:

> When the user selects from the list 71 the information terminal apparatus s/he wants to connect with by pressing the up or down selection key on the operation section of the remote controller 69 and presses the confirm (enter) key, the image display apparatus 1 connects with the selected information terminal apparatus. (EX-1005, ¶0078.)

In this way, a user can forcibly switch between the different PCs to display on the projections screen the desired content. Ono and Deforche disclose only a couple of design options of the many options discussed in the prior art. (*See additionally*, EX-1013, ¶¶0002, 0031, 0048-49, FIG. 2; EX-1008, ¶¶0019-20; 0023-27, FIG. 1).

146. Ono describes an exemplary method (or set of rules) for switching from the displaying the image data from information terminal apparatus 2A (coming from its LCD display 21) to the image data from information terminal apparatus 2B in Figure 13. (EX-1005, ¶0111-0126, FIG. 13.) As illustrated in Figure 13 below, PC 2A begins connected to the projector. (*Id*.) After PC 2B is selected by the remote controller, a sequence of steps occurs to disconnect PC 2A and connect PC 2B. (*Id*.) Once PC 2B is connected, "the transfer of image information from the [PC] 2B to the projector 60 is begun, and the projector 60 of the image display apparatus 1 projects and displays on the screen 5 the image from the information terminal apparatus 2B. (EX-1005, ¶0125.) Thus, the projector displays new "screen scraped data" from the information terminal apparatus 2B.

147. Additionally, Ono teaches that the remote controller also has fast forwarding/rewinding capabilities. (EX-1005, ¶0070.)

> The information terminal apparatus 2 interprets the control data for fast forwarding/rewinding images, which is received through the wireless connection module 44, and fast forwards/rewinds the image information displayed on its display section. In conjunction there with, the image projected onto the screen 5 of the image display apparatus 1 is also fast forwarded/rewound. (EX-1005, ¶0070.)

Thus, through operation of the remote controller, the screen data projected onto the projection screen by the same participant is replaced without requiring the agreement of another participant. In this additional way, Ono teaches a "forcing rule" as claimed.

3. Claim 5: The method of claim 1, wherein step b) is selected from:

presenting the peripheral device to the processing device as a human interface device and wherein the pre-installed generic driver is a human interface device driver,

presenting the peripheral device to the processing device as a mass storage device and wherein the pre-installed generic driver is a mass storage device driver

presenting the peripheral device to the processing device as a composite device and wherein the pre-installed generic driver is a mass storage device driver and wherein pre-installed generic drivers drive different device interfaces independently

148. The combined teachings of Ono and Deforche disclose and/or suggest all the limitations of claim 5. For example, Ono discloses that communications module 44 is a USB-type device. (EX-1005, ¶0054.) As discussed above regarding limitation 1(f) and 1(h), Deforche coupled with a POSITA's knowledge suggests presenting a peripheral device (*e.g.*, wireless communications module 44) as a mass storage device to make use of a "pre-installed" USB mass storage device driver. (*See*, *e.g.*, EX-1027, ¶¶0046, 0050-0052, 0059-0060; *see also* EX-1030, ¶0010; Section IX.A.2 (limitations 1(c), 1(f), 1(h)).)

4. Claim 8: The method of claim 1, wherein the transferring of the data for display is to a defined network node without user entry of configuration details

149. The combined teachings of Ono and Deforche disclose and/or suggest all the limitations of claim 8. For example, Ono discloses transferring of the data for display is to a defined network node without user entry of configuration information 48 (*e.g.*, "configuration details"). (*See*, *e.g.*, EX-1005, ¶¶0055 ("In order to connect the projector 60 of the image display apparatus 1 and the information terminal apparatus 2A to the wireless network, the user clicks on a set-up file with a mouse after plugging the USB memory 45 in a USB jack on the information terminal apparatus 2A. As a result, an installer will automatically be activated on the information terminal apparatus 2A, and the connection application 46, the driver 47 and the configuration information 48 will automatically be stored

in the HDD (Hard Disk Drive). Then, if the user inserts the wireless connection module 44 into the USB jack (slot) on the information terminal apparatus 2A, connection configuration for the wireless network will be completed, and transmission and reception of data with the projector 60 of the image display apparatus 1 that is already running will be carried out via the wireless network."), 0056-0063; *see also* EX-1001, 7:24-29 ("The routing of the screen scraped data can be to a defined network node such as a display node without user entry of configuration details. Thus, the routing can be dedicated to a specific network node such as a display node, base station etc. This is achieved by pairing of the peripheral device to the relevant node before the communication starts.").)

5. Claim 18: The method according to claim 1, wherein running said program does not require installation of the program or configuration of the processing device.

150. The combined teachings of Ono and Deforche disclose and/or suggest all the limitations of claim 18. For example, Deforche discloses, "the wireless modem device stores at least one application and is provided for launching said application as a portable application, meaning that the application keeps its data (cache) in the memory of the wireless modem device and no traces are left on the computer device." (*See*, *e.g.*, EX-1030, ¶¶15, *see also* 18, 26-27, 30-31, 47). It is my opinion that the person of ordinary skill in the art would have understood that the disclosure of the portable application leaving no trace on the PC means that the

application did not require installation. I also note that Deforche uses the same "portable application" term (and other terms) that the '676 patent uses. (*Id.*; EX-1001, 12:23-13:3).

6. Claim 20: The method according to claim 1, further comprising a program adapted to be loaded onto the processing device and to run on an operating system of the processing device, said program being adapted to obtain the media content from the processing device, running said program on the processing device does not require installation of the program or configuration of the processing device.

151. *See* Sections IX.A.2.h (Ground I (limitation 1(h) and claim 18)).

B. Ground II – Ono Discloses and/or Suggests all the Features of Claim 14

1. Rationale to combine

152. It is my opinion that Ono teaches screen scraping software as defined by the '676 patent (*See e.g.*, EX-1005, FIG. 1, ¶73). The '676 patent even admits that screen scraping software was known. (EX-1001, 13:59-62). Therefore, the combination of Ono and the admission further supports my opinion that Ono would have been understood to be screen scraping software, or that only minor modifications would have been required to make it screen scraping software because such software was well known, as admitted by the '676 patent. Screen scraping software could be loaded onto any general purpose PC to generate the predictable result of a PC running known software.

2. Claim 14

153. The teachings of Ono and the knowledge of a POSITA disclose and/or suggest all the limitations of claim 14.

a. Limitation 14(pre): A method for providing communication connectivity from a processing device, the processing device being a user device of a participant in a meeting with a plurality of participants, the method comprising the following steps

154. I have been asked to assume the preamble of claim 1 is limiting for the purposes of my analysis. If the preamble is not limiting, it would not affect my analysis for the limitations below.

155. To the extent limiting, Ono teaches limitation 1(a). For example Ono discloses a method for providing communication connectivity from information terminal apparatus 2A, 2B, 2C (*e.g.*, a "processing device") may be, for example, personal computers (PCs) (*e.g.*, a "user device"). (EX-1005, ¶0039.) A POSITA would have understood from Ono that each PC may be for one participant (*e.g.*, a presenter) in a meeting with a plurality of participants. (*See, e.g.*, EX-1005, ¶¶0036 ("The image display system 10 is a system that makes up a wireless network by connecting an image display apparatus 1 and three information terminal apparatuses 2A, 2B and 2C to a wireless communications channel."), 0037-0041, FIGs. 1 (reproduced below), 2 (illustrating the wireless network), 9 (illustrating a method connecting via the network), 13 (illustrating a method of switching connections

between information terminal apparatus 2A, 2B); *see also* Figures 16 and 17 (illustrating a similar embodiment but with an access point AP 3), 0144 ("Further, since, just through operations from the remote controller 69 of the image display apparatus 1, it is possible to switch the information terminal apparatus whose image is to be projected onto the screen 5, even in cases where, for example, there are a plurality of presenters to present in a given order, it becomes unnecessary for each presenter, in accordance with the order, to perform an output on/off operation at each information terminal apparatus, and therefore, the gap in time until the next presentation is eliminated, and presentations can be conducted speedily."), 0161, FIGs. 1, 16.)

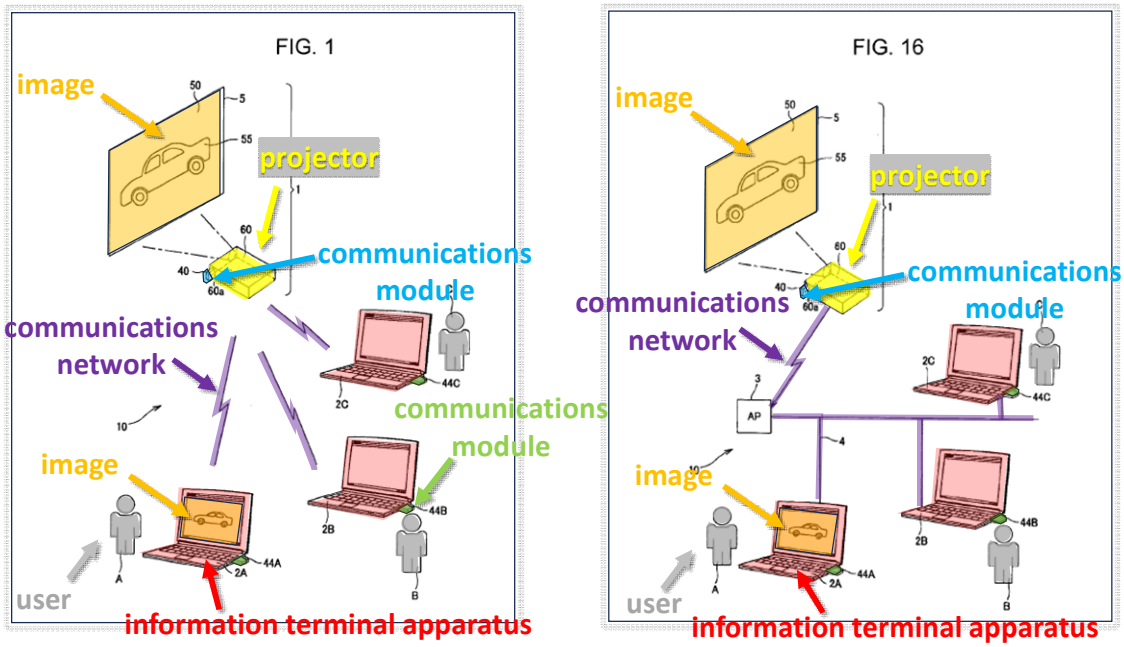

(EX-1005, FIG. 1, 16)

b. Limitation 14(a): setting up a communications network between a base node of the communications network and a peripheral device coupled to the processing device

156. Ono discloses and/or suggests this limitation. For example, Ono discloses setting up a communications network between an image display apparatus 1 (including wireless communication module 40, control section CPU 61) (*e.g.*, a "base node") of the communications network and wireless communication modules 44A, 44B, 44C (*e.g.*, "a peripheral device") coupled to information terminal apparatuses 2A, 2B and 2C (*e.g.*, the "processing device") via interface (I/F) 28. (*See*, *e.g.*, EX-1005, ¶¶0039 ("Communications modules 44A, 44B and 44C, such as wireless connection modules, are also attached to the body of the information terminal apparatuses 2A, 2B and 2C, respectively, via a slot. ... In addition, they are also used for transmitting image information to the projector 60."), 0054 ("The image display apparatus 1 may come with the wireless connection module 44 of a USB (Universal Serial Bus) type, for the information terminal apparatus 2A,"), 0055 ("[I]f the user inserts the wireless connection module 44 into the USB jack (slot) on the information terminal apparatus 2A, connection configuration for the wireless network will be completed, and transmission and reception of data with the projector 60 of the image display apparatus 1 that is already running will be carried out via the wireless network."), 0062 ("[I]nserting the plurality of wireless connection modules

44 into the respective other USB jacks, the user of the image display apparatus 1 may connect the image display apparatus 1 and the plurality of information terminal apparatuses 2A, 2B and 2C to the wireless network.”), FIGs. 1, 2, 4, 16.)

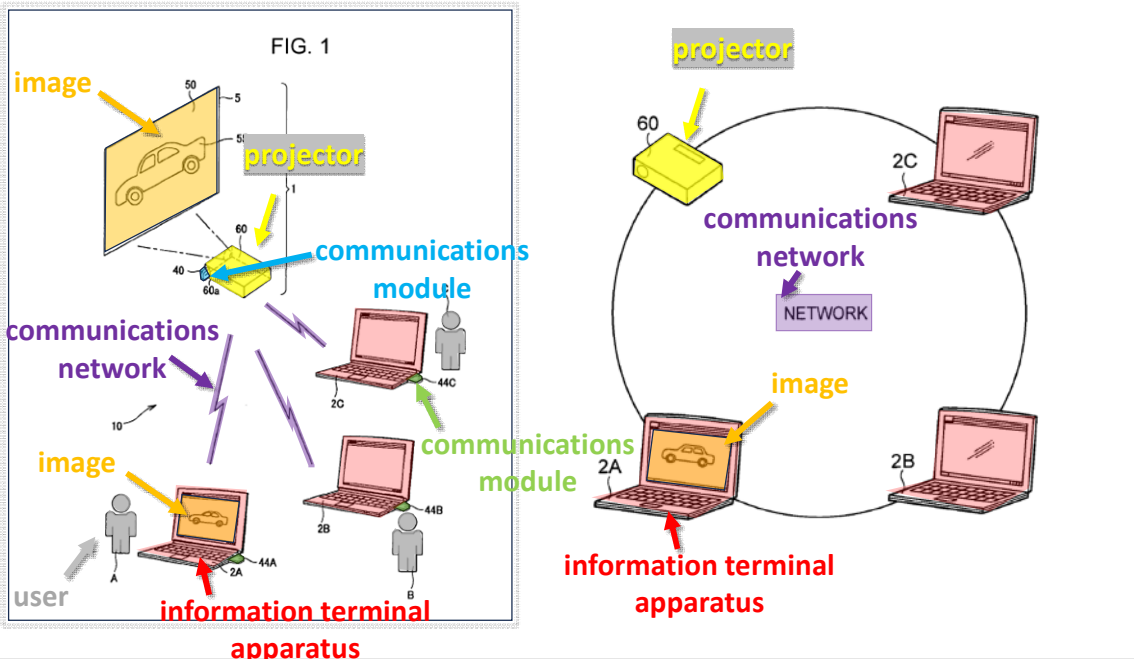

(EX-1005, FIGs. 1 and 2.)

c. Limitation 14(b): transferring media content between the processing device and the peripheral device

157. Ono discloses and/or suggests this limitation. For example, Ono discloses transferring image data (*e.g.*, “media content”) between information terminal apparatus 2A, 2B and 2C (*e.g.*, the “processing device”) and wireless communication modules 44A, 44B, 44C (*e.g.*, “peripheral devices”). (*See*, *e.g.*, EX-1005, ¶¶0039 (“The three information terminal apparatuses 2A, 2B and 2C may be, for example, personal computers (PCs). Communications modules 44A, 44B and

44C, such as wireless connection modules, are also attached to the body of the information terminal apparatuses 2A, 2B and 2C, respectively, via a slot. ... In addition, they are also used for transmitting image information to the projector 60.”), 0054 (“The image display apparatus 1 may come with the wireless connection module 44 of a USB (Universal Serial Bus) type, for the information terminal apparatus 2A,”), 0055 (“[I]f the user inserts the wireless connection module 44 into the USB jack (slot) on the information terminal apparatus 2A, connection configuration for the wireless network will be completed, and transmission and reception of data with the projector 60 of the image display apparatus 1 that is already running will be carried out via the wireless network.”), 0062 (“[I]nserting the plurality of wireless connection modules 44 into the respective other USB jacks, the user of the image display apparatus 1 may connect the image display apparatus 1 and the plurality of information terminal apparatuses 2A, 2B and 2C to the wireless network.”), FIGs. 1, 4, 16.)

d. Limitation 14(c): the media content being screen scraped data from a screen of the processing device

158. Ono discloses and/or suggests this limitation. For example, Ono discloses image data (*e.g.*, “the media content”) being screen scraped data from liquid crystal display (LCD) 21 (*e.g.*, “a screen”) of information terminal apparatus 2A, 2B and 2C (*e.g.*, the “processing device”). (*See*, *e.g.*, EX-1005, ¶¶0041, 0054,

0055, 0058, 0073 ("[I]mage information to be sent out to the image display apparatus 1 is selected and displayed on the liquid crystal display apparatus LCD 21."), 0076, 0088 ("[T]he CPU 20 of the selected information terminal apparatus 2A transmits the image information signal displayed on the liquid crystal display apparatus 21 to the wireless connection module 40 of the projector 60 from the wireless connection module 44 via the I/F 28."), 0144, FIG. 1.)

159. While a POSITA would have recognized from Ono's disclosures that the content of the transmitted image data is "screen scraped data," a POSITA looking to implement a system like Ono, particularly such that the image data from a display (*e.g.*, LCD 21) of the information terminal apparatus is transmitted and displayed on projection screen (*e.g.*, as illustrated in Ono's Figure 1), would have considered and utilized well-known screen scraping algorithms. Indeed, the '676 patent acknowledges that screen scraping was known in the art (EX-1001, 13:59-62) and could have been predictably implemented in an image display system like that of Ono using known techniques, for instance, as described in Slobodin, which is directed to wireless transmission of screen scraped data to a projector (*see*, *e.g.*, EX-1033, ¶¶0011-0012).

e. Limitation 14(d): transmitting the media content from the peripheral device to the communications network

160. Ono discloses and/or suggests this limitation. For example, Ono discloses transmitting the image data (*e.g.*, the "media content") from the wireless communication module 44 (*e.g.*, the "peripheral device") to the communications network. (*See*, *e.g.*, EX-1005, ¶¶0035, 0039-0042 ("[I]mage information that is sent from the above-mentioned three information terminal apparatuses 2A, 2B and 2C via the network…."), 0050-0055 ("[I]f the user inserts the wireless connection module 44 into the USB jack (slot) on the information terminal apparatus 2A, connection configuration for the wireless network will be completed, and transmission and reception of data with the projector 60 of the image display apparatus 1 that is already running will be carried out via the wireless network."), 0061 ("The information terminal apparatuses 2B and 2C are connected to the wireless network in a manner similar to the information terminal apparatus 2A."), 0056-0057, 0062 ("Thus, by … inserting the plurality of wireless connection modules 44 into the respective other USB jacks, the user of the image display apparatus 1 may connect the image display apparatus 1 and the plurality of information terminal apparatuses 2A, 2B and 2C to the wireless network), 0068, 0076, 0088, 0144, FIGs. 1, 2 (schematically showing a wireless network system

including the projector 60 and the three information terminal apparatuses 2A, 2B and 2C), 16.)

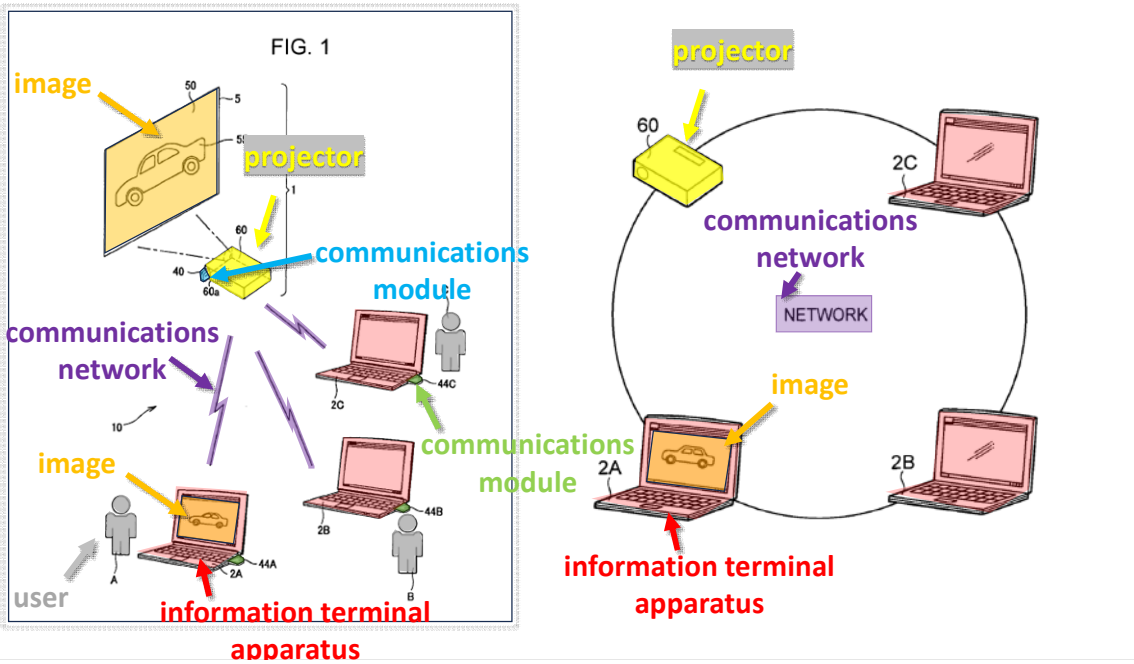

(EX-1005, FIGs. 1 and 2)

f. Limitation 14(e): receiving media content from the communications network at the base node

161. Ono discloses and/or suggests this limitation. For example, Ono discloses receiving image data (*e.g.*, "media content") from the communications network at (*e.g.*, "a base node"). (*See*, *e.g.*, EX-1005, ¶¶0011 ("[A]n image display apparatus [] receives a transfer of image information via the network from the above-mentioned one or more information terminal apparatuses and displays on a display section an image based on the above-mentioned image information...."), 0038 ("[T]he module 40 is used for receiving image information that is sent from the three

information terminal apparatuses 2A, 2B and 2C via the wireless network."), 0041 ("The projector 60 of the image display apparatus 1 receives, through the communications module 40, the above-mentioned encrypted image information wirelessly transmitted from the information terminal apparatus 2A via the above-mentioned wireless communications channel, and projects it onto the display screen 50 of the screen 5 as an enlarged image 55 after converting it into decrypted image information."), 0042 ("FIG. 3 is a block diagram schematically showing a configuration of the image display apparatus 1. The image display apparatus 1 is comprised of the screen 5 and the projector 60, receives, through the communications module 40, such as a wireless connection module, image information that is sent from the above-mentioned three information terminal apparatuses 2A, 2B and 2C via the network, and displays an image based on the image information on the screen 5."), 0089 ("The wireless connection module 40 of the projector 60 receives the image information transmitted from the information terminal apparatus 2A. The CPU 61 receives the above-mentioned image information via the I/F 66, and based thereon, makes image signals based on the above-mentioned image information be output by the image signal output section 65, and projects and displays the image from the information terminal apparatus 2A on the screen 5."), FIGs. 1-3, 6, 7, 9.)

g. Limitation 14(f): displaying the media content on a display in accordance with a set of rules, one of the rules being a forcing rule, whereby the forcing rule determines that the displaying of media content on the display is obtained by a user action on any one of the user devices involved in the meeting, without requiring the agreement of another participant, the media content from the any one of the user devices overriding or replacing any data displayed on the display by the same or another participant of the meeting

162. Ono discloses and/or suggests this limitation for the same reasons as discussed above regarding limitations 1(l), 1(m). (See Section IX.A.2.)

C. Ground III – Ono, Deforche, and Grimshaw Disclose and/or Suggest the Features of Claims 4, 16 and 19

1. Rationale to combine

163. I explained above in ¶116 why it would have been obvious to combine Ono and Deforce.

164. It is my opinion that Grimshaw also discloses a similar presentation communication system. (EX-1008, abstract). Therefore, Ono, Deforche, and Grimshaw all relate to similar presentation technology. I reviewed both Ono and Grimshaw and determined that they both disclose buttons or actuators for controlling display of images from user's PCs. (EX-1008, ¶¶5, 19-20, 27-28, FIGs. 1-4; EX-1005, ¶¶44-48, 66-71, 77-78, 80-89, FIGs. 3, 6, 8, 9). However, Grimshaw's button is on a USB device connected to the PC in contrast with Ono's, which is on a separate remote control. (*Id.*) It is my opinion that it would have been a simple design choice

to move Ono's button to other devices in the system, including the peripheral device as taught by Grimshaw. Grimshaw also discloses benefits of giving each user control of the display. (*Id*., ¶¶4-6, 28, 37). Moving or adding a button to Ono's peripheral device would have predictably resulted in a system similar to Grimshaw allowing the user to present their display onto the projector.

2. Claim 4: The method of claim 1, wherein the peripheral device has an actuator, the method further comprising a user action on the actuator that triggers transfer of the data for display from the processing device to the wireless transceiver and from there to the wireless communications network.

165. It is my opinion that Ono discloses and/or suggests this limitation. For example, Ono discloses a remote control with buttons including a selection key to display data from a user's display onto the projector. (EX-1005, ¶¶44-48, 66-71, 77-78, 80-89, FIGs. 3, 6, 8, 9).

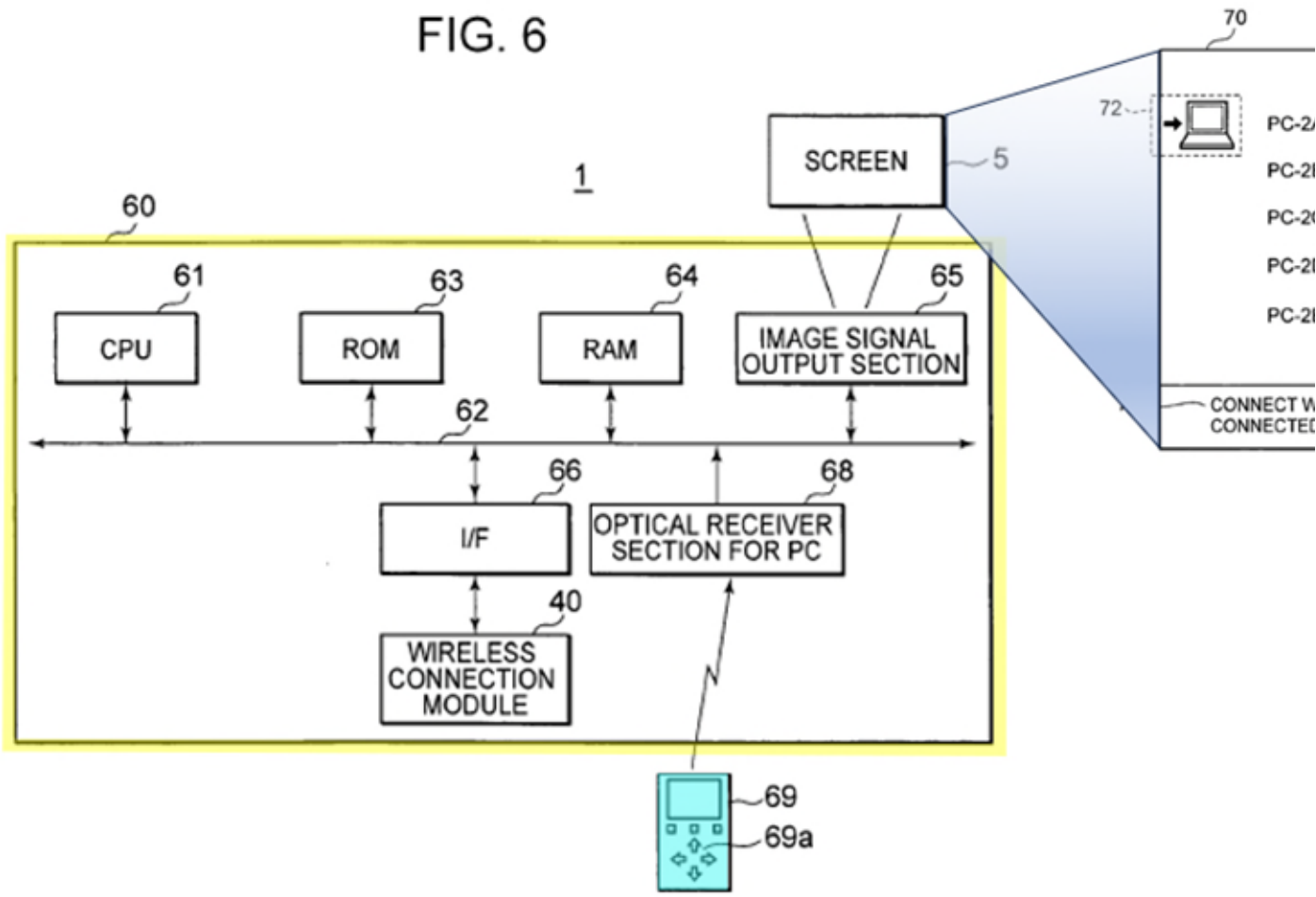

(EX-1005, FIGs. 6, 8).

166. Ono discloses that remote controller 69 can call up list 71 of available PCs (FIG. 8) for connection to the image display apparatus. (EX-1005, ¶¶66-72, 77-78). The user presses the up/down selection key on remote controller 69 to select a particular PC and then presses the confirm (enter) key when the user reaches the desired PC. (EX-1005, ¶¶66-72, 77-78). This selection triggers a connection process between the selected information terminal apparatus and the image display

apparatus, which results in the transfer of the image information from the wireless connection module 44 to the wireless network and communications module 40 via the network. Once received the image information is displayed on screen 5. (EX-1005, ¶¶66-70, 77-78, 80-89, FIG. 9).

167. Additionally, Ono discloses that, once the desired PC is connected, remote controller 69 may fast-forward/rewind images on the PC screen and, in conjunction therewith, the images projected on screen 5. A POSITA would have understood this fast-forwarding/rewinding to trigger additional transmissions of image information. (EX-1005, ¶70). However, Ono does not disclose that the peripheral device has an actuator.

168. However, Grimshaw discloses similar actuators (e.g., buttons 344, 354, 364, 374) on respective the peripheral devices (e.g., user modules 14, 16, 18, 20) that trigger transfer of data for display (e.g., "user selected arbitrary media content") from a user module to the control module 12 for display on the display module 22. (EX-1008, ¶¶5, 19 ("[T]he users of modules 14, 16, 18, 20 can take control of the display module 22 by respectively engaging buttons 344, 354, 364, 374, which causes switch controller 318 to pass the data signals from the selected user module on to the display module."), 20, 27-28, FIGs. 1-4; EX-1012, 5:8-6:17, 8:29-9:20, FIGs. 1-4). A POSITA would have understood that buttons 344, 354, 364, 374 constitute actuators coupled to the user modules 14, 16, 18, 20.

169. A POSITA looking to implement an image projection system like that of Ono would have found it obvious to employ a technique and components as described by Grimshaw in addressing the problem where multiple users are "vying for control" of a shared display. (EX-1008, ¶19).

3. Claim 16

170. The combined teachings of Ono, Deforche, and Grimshaw disclose and/or suggest all the limitations of claim 16.

a. Limitation 16(pre): An electronic meeting tool for communicating arbitrary media content, being data for display, from users at a meeting

171. I have been asked to assume the preamble of claim 1 is limiting for the purposes of my analysis. If the preamble is not limiting, it would not affect my analysis for claim 16.

172. To the extent limiting, Ono teaches limitation 1(pre). For instance, Ono discloses image display system 10 (*e.g.*, electronic meeting tool) "makes up a wireless network by connecting an image display apparatus 1 and three information terminal apparatuses 2A, 2B and 2C to a wireless communications channel." (EX-1005, ¶0036, FIG. 1 (reproduced below); *see also* Figures 16 and 17 (illustrating a similar embodiment but with an access point AP 3).) Although my analysis here focuses on Ono's first embodiment, it is equally applicable to the embodiment illustrated in Figures 16 and 17.

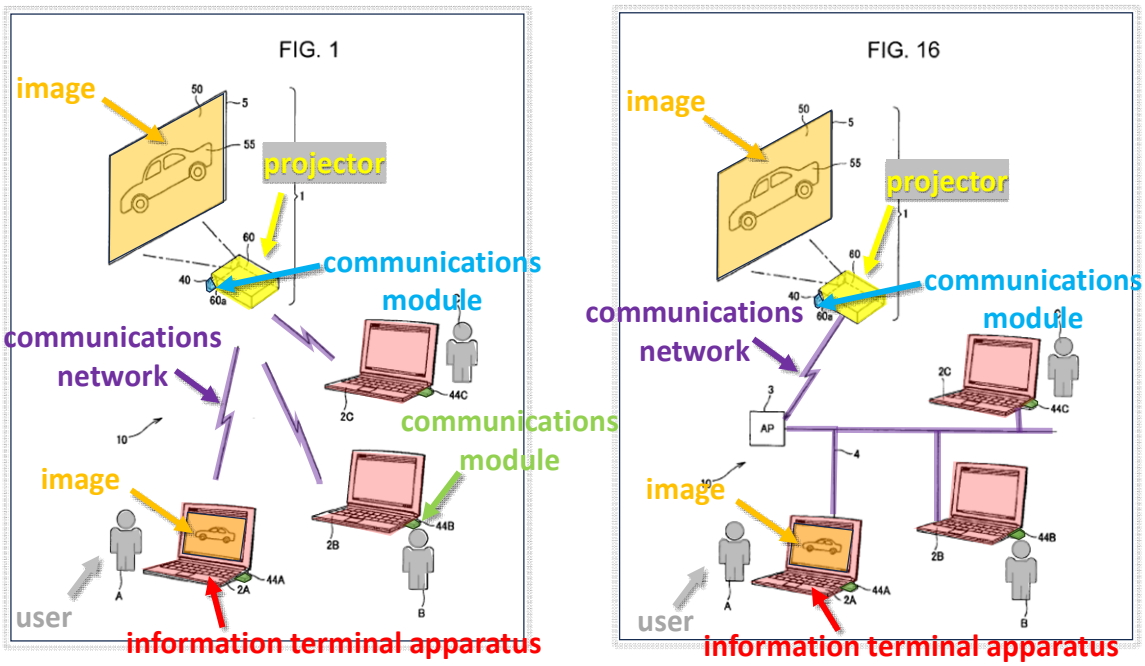

(EX-1005, FIGs. 1, 16.)

173. As discussed above, I understand that the ’676 patent states that “the term ‘arbitrary media content’ refers to “the fact that a user may generate, create or select any media content that is appropriate to display, i.e., on an ad hoc basis.” (EX-1001, 13:50-58.) As discussed further below, Ono’s image display system enables display of an image 55 based on the image data of display 21 of the user’s information terminal apparatus (*e.g.*, “data for display”). Said differently, Ono’s system enables a projector to display what is on a user’s computer screen. Ono’s image information is thus consistent with description of “user selected arbitrary media content” provided by the ’676 patent.

174. For example, Ono discloses that when the information terminal apparatus 2A and the projector 60 are connected (step S8), "the CPU 20 of the selected information terminal apparatus 2A transmits the image information signal displayed on the liquid crystal display apparatus 21 to the wireless connection module 40 of the projector 60 from the wireless connection module 44 via the I/F 28." (EX-1005, ¶0088; *see also* EX-1005, FIGs. 7, 9.) Ono further discloses that "the projector 60 receives the image information transmitted from the information terminal apparatus 2A ... and based thereon, makes image signals based on the above-mentioned image information be output by the image signal output section 65, and projects and displays the image from the information terminal apparatus 2A on the screen 5." (EX-1005, ¶0089; *see also* EX-1005, FIG. 1.) The same can be said for information terminal apparatus 2B and 2C, and reasonably extends to others in a meeting. (*See, e.g.*, EX-1005, ¶¶0036, 0039.)

175. A POSITA would have would have understood that Ono's system "differs from client voting on, or selecting of media content that is displayed by another in a meeting or presentation" (EX-1001, 13:50-58), as distinguished by the '676 patent. Ono's system projects an image 55 onto display screen 50 that corresponds to the image displayed on the selected information terminal apparatus. For example, Figure 1 shows a car displayed on information terminal 2A and the same car displayed on display screen 50. (EX-1005, FIG. 1; *see also* EX-1005,

¶¶0073 ("[I]t is assumed that image information to be sent out to the image display apparatus 1 is selected and displayed on the liquid crystal display apparatus LCD 21."), 0077-0089 (explaining how the information displayed on display 21 of information terminal 2 is transferred to projector 60 for display), FIG. 7 (below).) Thus, whatever image information is selected by the user for display on display of the information terminal 2A will be displayed on the display screen 20 if the information terminal 2A is selected for display.

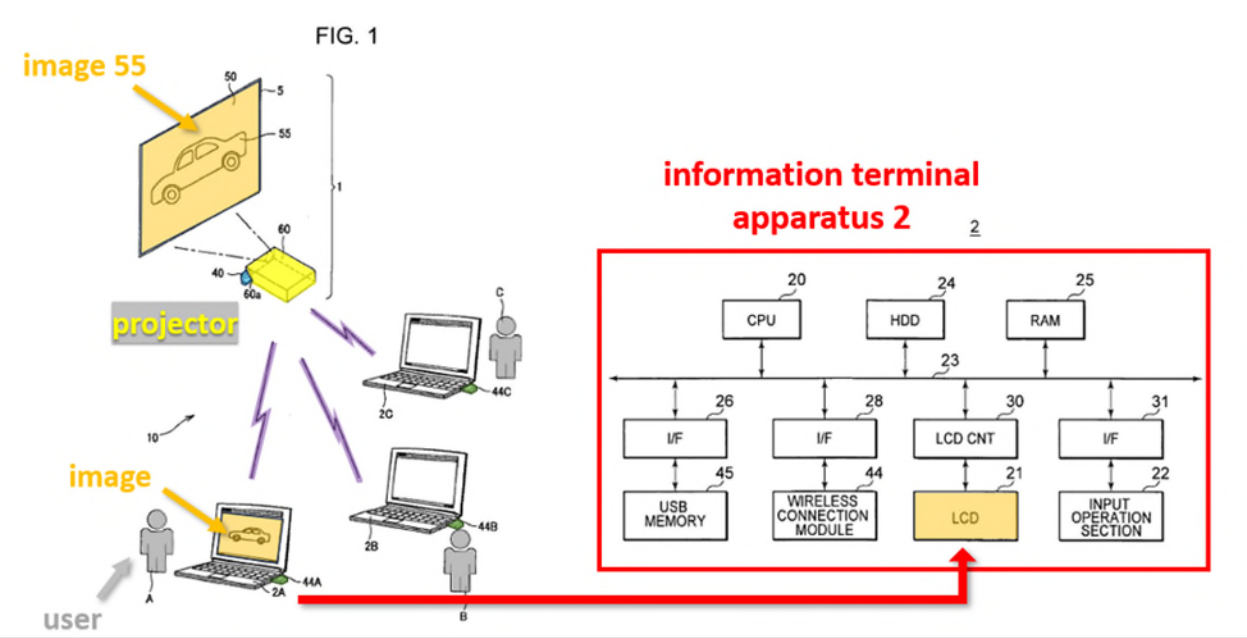

(EX-1005, FIGs. 1, 7.)

176. At least in this regard, Ono does not describe, in the words of the '676 patent, "a central presenter providing content which is presented to the members of the meeting" and instead provides a system with "client oriented, distributed rights and privileges for the display of content." (EX-1001, 13:50-58.)

Rather, considering Ono's description, a POSITA would have understood image display system 10 to be an electronic meeting tool for communicating arbitrary media content, being data for display, from users at a meeting.

b. Limitation 16(a): a base unit of a wireless communications network, the base unit being coupled to one or more first displays

177. Ono discloses and/or suggests this limitation. For example, Ono discloses that image display apparatus 1 (including wireless communication module 40, control section CPU 61) includes a projector 50 (*e.g.*, "a base unit") of a wireless network being coupled to screen 5 (*e.g.*, "a first display").[5] (*See*, *e.g.*, EX-1005, ¶¶0042 ("The image display apparatus 1 is comprised of the screen 5 and the projector 60, receives, through the communications module 40, such as a wireless connection module, image information that is sent from the above-mentioned three information terminal apparatuses 2A, 2B and 2C via the network, and displays an image based on the image information on the screen 5."), 0043 ("The projector 60

5 My identification of structure corresponding to the claim elements is exemplary only. Additional or alternative components could be identified. For example, components of projector 50 may constitute a "base unit," which are coupled to a "first display." Similarly, Ono teaches alternative display structures as a "first display." (See EX-1005, ¶0162.)

is comprised of a holding section 63, a control section 61, a selecting section 69, an image signal output section 65 and the above-mentioned communications module 40.”), 0065 (“The image signal output section 65 [of FIG. 6] is similar to the one shown in FIG. 3, and generates image signals for displaying, as the list 71, on the screen 5 the information of the information terminal apparatuses read by the CPU 61.”), 0089 (“The wireless connection module 40 of the projector 60 receives the image information transmitted from the information terminal apparatus 2A. The CPU 61 receives the above-mentioned image information via the I/F 66, and based thereon, makes image signals based on the above-mentioned image information be output by the image signal output section 65, and projects and displays the image from the information terminal apparatus 2A on the screen 5.”), FIGs. 1-3, 6, 7, 9.)

FIG. 1

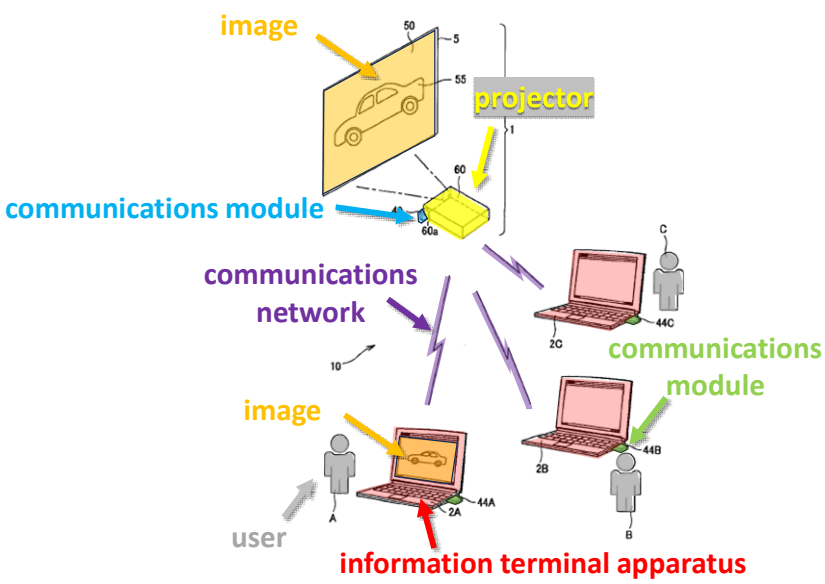

(EX-1005, FIG. 1.)

c. Limitation 16(b): the base unit being adapted to receive user selected arbitrary media content from a processing device via the wireless communications network, and to control display of the user selected arbitrary media content on the one or more first displays

178. Ono discloses and/or suggest this limitation. For example, Ono discloses the projector 60 (*e.g.*, a "base unit") being adapted to receive image information (*e.g.*, "user selected arbitrary media content") from information terminal apparatus 2 (*e.g.*, a "processing device") via the wireless network, and to control display of the image data on screen 5 (*e.g.*, the "one or more first displays"). (EX-1005, ¶¶0011 ("[A]n image display apparatus [] receives a transfer of image information via the network from the above-mentioned one or more information terminal apparatuses and displays on a display section an image based on the above-mentioned image information...."), 0037 ("The wireless communications channel is one that utilizes a transmission path other than a wire cable, such as radio waves and infrared rays."), 0038 ("[T]he module 40 is used for receiving image information that is sent from the three information terminal apparatuses 2A, 2B and 2C via the wireless network."), 0041 ("The projector 60 of the image display apparatus 1 receives, through the communications module 40, the above-mentioned encrypted image information wirelessly transmitted from the information terminal apparatus 2A via the above-mentioned wireless communications channel, and projects it onto

the display screen 50 of the screen 5 as an enlarged image 55 after converting it into decrypted image information."), 0043-0048, 0065-0070 (explaining how projector 60 controls display in response to remote controller 69), FIGs. 1-3, 6, 7, 9; *see also* my discussion above regarding "arbitrary media content" in Section IX.C.a (limitation 16(pre)).)

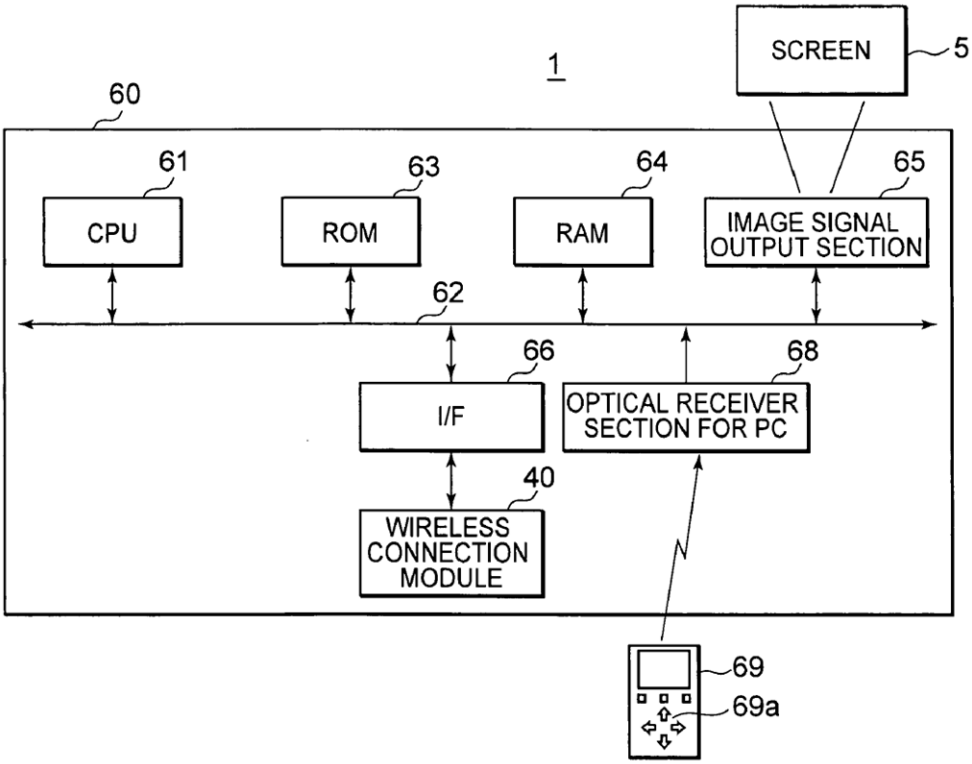

(EX-1005, FIG. 6.)

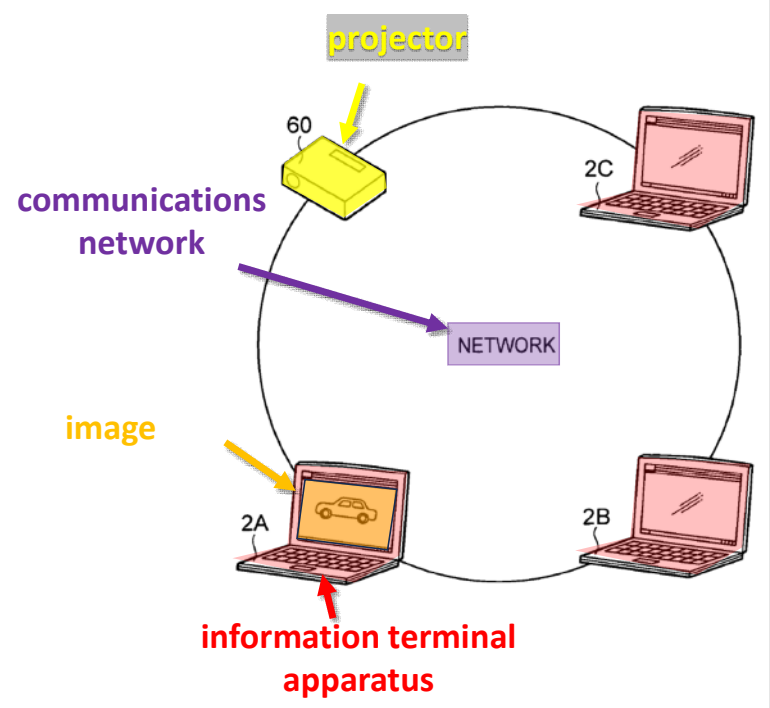

(EX-1005, FIG. 2)

179. As noted above, the control section 61 controls display of the image information (*e.g.*, "user selected arbitrary media content") on the screen 5. (*See*, *e.g.*, EX-1005, ¶0089 ("The CPU 61 receives the above-mentioned image information via the I/F 66, and based thereon, makes image signals based on the above-mentioned image information be output by the image signal output section 65, and projects and displays the image from the information terminal apparatus 2A on the screen 5.").)

d. Limitation 16(c): at least one peripheral device adapted to communicate the user selected arbitrary media content from the processing device to the base unit via the wireless communications network

180. Ono discloses and/or suggests this limitation. For example, Ono discloses that wireless communications module 44 (*e.g.*, "at least one peripheral device") is adapted to communicate the image information (*e.g.*, the "user selected arbitrary media content") from information terminal apparatus 2 (*e.g.*, the "processing device") to projector 60 (*e.g.*, the "base unit") via the wireless network. (*See*, *e.g.*, EX-1005, ¶¶0039 ("The three information terminal apparatuses 2A, 2B and 2C may be, for example, personal computers (PCs). Communications modules 44A, 44B and 44C, such as wireless connection modules, are also attached to the body of the information terminal apparatuses 2A, 2B and 2C, respectively, via a slot. ... In addition, they are also used for transmitting image information to the projector 60."), 0055 ("[I]f the user inserts the wireless connection module 44 into the USB jack (slot) on the information terminal apparatus 2A, connection configuration for the wireless network will be completed, and transmission and reception of data with the projector 60 of the image display apparatus 1 that is already running will be carried out via the wireless network."), 0144, FIGs. 1, 2, 16.)

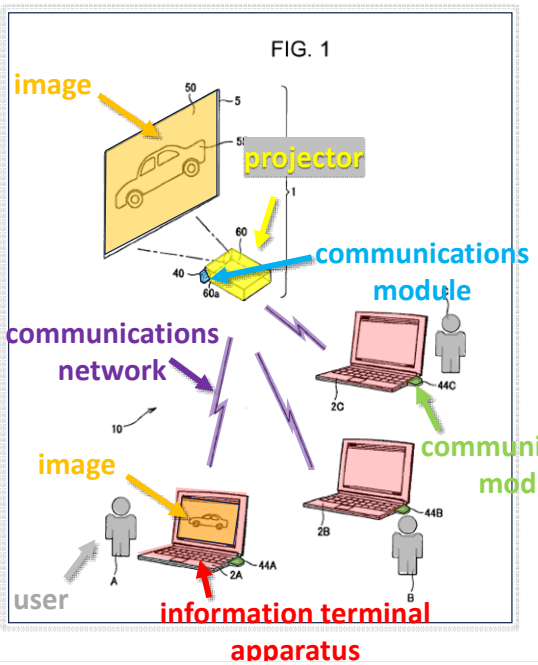

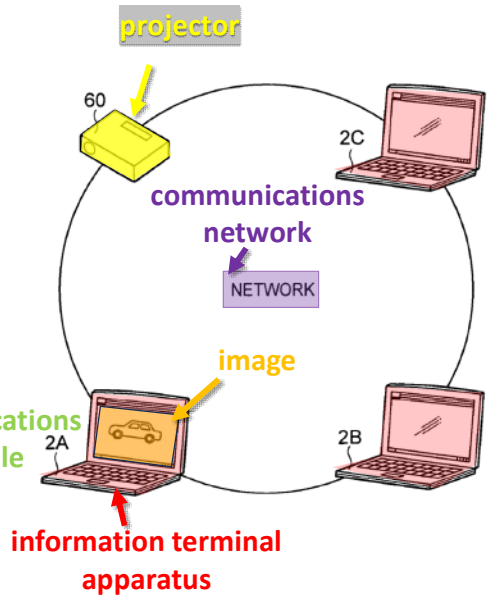

(EX-1005, FIGs. 1 and 2.)

e. Limitation 16(d): a program adapted to be loaded onto the processing device and to run on an operating system of the processing device, said program being adapted to obtain user selected arbitrary media content from the processing device

181. *See* Limitation 1(h) above.

f. Limitation 16(e): an input device to allow the user to carry out a user action that triggers transfer of said user selected arbitrary media content from said processing device to a transmitter and to the wireless communications network, the input device being an actuator coupled to the peripheral device

182. Ono discloses and/or suggests this limitation. For example, Ono discloses remote controller 69 (*e.g.*, an input device) to allow the user to carry out a user action (such as pressing a button for switching connections between information

terminal apparatus or for fast forwarding/rewinding images) that triggers transfer of image information (*e.g.*, said "user selected arbitrary media content") from information terminal apparatus (*e.g.*, said "processing device") to an wireless information terminal apparatus 44 and to the wireless network, the input device being a button (*e.g.*, an actuator) indirectly coupled to the information terminal apparatus 44 (*i.e.*, the "peripheral device"). (*See, e.g.*, EX-1005, ¶¶0066-0074, 0078, 0080-0089, 0112-0126, FIGs. 6, 9, 13.)

183. For example, Ono discloses a remote controller 69 configured to allow the user to carry out selection of the particular information terminal apparatus (2A, 2B, 2C) connected to the projector 60. Upon selection of a particular information terminal apparatus 2A, 2B, 2C, the respective communication module 44A, 44B, or 44C sends image information (*i.e.*, appearing on LCD display 21) to the image display apparatus 1 via the wireless network for display on screen 5, as I discussed above. (*See, e.g.*, EX-1005, ¶¶0066 ("The remote controller 69 is an example of the selecting section 69 shown in FIG. 3, and selects one information terminal apparatus from the list 71 displayed on the screen 5. In addition, using the remote controller 69, operations such as configuring the connection to the wireless network, switching the connection and disconnection with the plurality of information terminal apparatuses, and so forth are performed."), 0067-0074, 0078, 0080-0089; *see also*

my discussion above regarding transmission of the image information for display on screen 5).)

184. Ono also explains that:

> when the projector 60 of the image display apparatus 1 receives the infrared remote control signal from the remote controller 69 through the remote control optical receiver section 68, the CPU 61 … sends the respective transmission control data from the wireless connection module 40 to the wireless connection module 44 of the information terminal apparatus 2 via the I/F 66. The information terminal apparatus 2 interprets the control data for fast forwarding/rewinding images, which is received through the wireless connection module 44, and fast forwards/rewinds the image information displayed on its display section. In conjunction therewith, the image projected onto the screen 5 of the image display apparatus 1 is also fast forwarded/rewound. (EX-1005, ¶0070.)

Hence, in at least this way, the button of remote controller 69 is indirectly coupled to the wireless connection module 44.

185. Further, a POSITA would have understood that user input devices, such as physical actuators, to allow a user action to easily trigger an electronic process, were ubiquitous in electronic devices at the time of the alleged invention. Buttons and other physical actuators were conventionally located anyplace reasonably convenient to the user. Indeed, Ono's remote controller 69 exemplifies one design

choice by pressing a selection key. For instance, Ono states that "[w[hen the user selects from the list 71 the information terminal apparatus s/he wants to connect with by pressing the up or down selection key on the operation section of the remote controller 69 and presses the confirm (enter) key, the image display apparatus 1 connects with the selected information terminal apparatus." (EX-1005, ¶0078.) Ono further teaches that once connected, the image information is transmitted to the image display device from the selected information terminal apparatus. Thus, the confirm key on the remote control 69 triggers transmission of image information (*e.g.*, user selected arbitrary media content), namely whatever is displayed on the LCD screen of the selected information terminal apparatus. (*See, e.g.*, EX-1005, ¶¶0083-0089.)

186. A POSITA considering the implementation of an image display system based on Ono would have considered known technologies, techniques, design considerations, *etc*. to design and implement such a system. (*See* my discussions above in Section V.) Thus, such a skilled person would have considered the teachings and suggestions in the art, including those of Corbett and Grimshaw (both further discussed below).

187. A POSITA would have also appreciated that Ono's selection/confirmation keys to trigger transmission of image information, as simple physical actuators, could have been incorporated into additional components of the

system, such as Ono's wireless communication module 44 in much the same manner and without altering their functionality. A POSITA would have been motivated to make such a modification to an image display apparatus like that of Ono, for a variety of reasons as discussed below.

188. First, a POSITA would have understood and appreciated that adding such an image triggering functionality to a wireless communication module would have simply provided an additional or alternate way in which a user may select the desired information terminal apparatus for display, conveniently located at the user's information terminal apparatus. In other words, adding an input device as claimed would have constituted the addition of a known input device (*e.g.*, like that of Ono's remote control) to a known apparatus (*e.g.*, like that of Ono's a wireless communications module) according to its known function (*e.g.*, like that described by Ono to switch a common display to display the contents of the user's information terminal apparatus). Such a modification would have been obvious and within the ordinary skill of a POSITA. (*See, e.g.*, EX-1007, ¶¶0022, 0023, 0026, 0046; EX-1008, ¶¶0004, 0019, 0020, 0027-0028.)

189. Second, beyond the predictability and applicability of a button to trigger transmission of information, a POSITA would have appreciated the desirability of such a feature to make it more user-friendly and convenient. For example, a person of ordinary skill in the art would have understood that Corbett is direct to peripheral

devices, particularly USB peripheral devices. (EX-1007, ¶0002.) And much like Ono's communication module 44 (a USB-type peripheral device), Corbett's peripheral device may also wirelessly transmit information to an external device (*i.e.*, a device that is not coupled to the peripheral device). (EX-1007, ¶¶0018-0023.) Such a POSITA would have also recognized that Corbett and Ono were from the same field of endeavor as the '676 patent and address similar problems of allowing user control over transmission of information. (*See* EX-1001, 1:21-26 ("The present invention relates to electronic tools for meetings including methods or devices for providing connection to a communications network, to networks or methods of operating the network, methods or devices for use in displaying media content as well as software for performing any of these methods.").) Thus, a POSITA looking to implement an image display system like that of Ono would have been aware of, and considered, in considering various ways in which to improve Ono, teachings like those disclosed in Corbett.

190. Corbett discloses a USB flash drive 100 including a transmitter for wireless transmission and a transmission initiation button 134 for allowing a user to trigger transfer of stored information to an external device. (*See, e.g.*, EX-1007, ¶¶0006, 0018, 0020 ("The transmitter may transmit a modulated data signal and/or may transmit the data wirelessly, e.g., without a direct physical connection between the USB flash drive and the external device 150."), 0022, 0023 ("In another example,

transfer of data through the transmitter 122 may be initiated through selection of one or more selectors 130 of the USB flash drive. For example, as shown in FIG. 1, the USB flash drive 100 may include a transmission initiation selector 134. Such as a button, selector wheel, and the like."), 0026, 0028, 0046, FIG. 1.) Thus, Corbett describes one design option in implementing transmission initiation input device like that of Ono and claimed by the '676 patent.

191. As another example, Grimshaw is directed to "a communication system and, more particularly, to a communication system that may provide a combination of audio, video, telephony, presentation and/or other conferencing functions." (*See*, *e.g.*, EX-1008, abstract, ¶0002; *see also* my summary of Grimshaw above.) In particular, Grimshaw describes user modules that couple to laptop computers to allow transmission to a common display and thus is analogous to the arrangement in Ono. Again, a POSITA would have also recognized that Grimshaw and was from the same field of endeavor as the '676 patent and address similar problems of allowing user control over transmission of information. (*See* EX-1001, 1:21-26.) Thus, a POSITA looking to implement an image display system like that of Ono would have been aware of, and considered, in considering various ways in which to improve Ono, teachings like those disclosed in Grimshaw.

192. Grimshaw discloses user modules 14, 16, 18, 20 can connect to each to each user's laptop around the table, for example, and—with the push of a button—

allow the user to take control of a common display module 22 and display the contents of the user's laptop screen. (*See, e.g.*, EX-1008, ¶¶0004, 0019 (The display module 22 may not simultaneously display the information from all four computers/user modules. Thus, the users of modules 14, 16, 18, 20 can take control of the display module 22 by respectively engaging buttons 344, 354, 364, 374, which causes switch controller 318 to pass the data signals from the selected user module on to the display module."), 0020 ("Consider the example where separate laptop computers are connected to each of the user modules 14-20 (each user module has one or more data ports), but an operator has engaged button 344 on user module 14 because they wish to take control of display module 22. To explain, a user may engage or push a button 344, 354, 364, 374 on their user module in order to take control of display module 22 (e.g., display module 22 could show whatever is currently being displayed on the screen of the laptop computer connected to the selected user module)."), 0027-0028, FIG. 1.) Thus, Grimshaw illustrates another design option in implementing transmission initiation input device like that of Ono and claimed by the '676 patent.

193. Based on the teachings and suggestions of Corbett and/or Grimshaw and the knowledge of a person of ordinary skill in the art at the time, it is my opinion that a person of ordinary skill in the art would have been motivated to develop an image display system like that of Ono to include a physical actuator directly on a

peripheral device like Ono's communication module 44 to trigger transmission of image information from a transmitter to a wireless communications network and to a base node through the wireless communications network for display on the first display. A POSITA would have been motivated to implement such a feature as a known design choice that provides a convenient, user-friendly location for such an input device.

194. Third, while remote controllers like that taught by Ono have certain known advantages, they also have known limitations. For example, it would have been known from common experience that Ono's remote controller would have to be shared among the users of the different information terminal apparatus 2A, 2B, 2C and any others—limiting convenience for some users. Further, remote controllers typically required battery power—and thus may not work if the batteries need replacement. Remote controllers may also be misplaced. For at least these reasons, electronic devices were often designed with alternative forms of input. For example, televisions and set-top boxes—despite typically including remote controllers—conventionally included physical actuators on the devices themselves to perform the same functions and act as a back-up if the remote were lost or otherwise inconvenient.

195. In light of the ubiquitous use of physical actuators to act as input devices, the known use of a dedicated button to trigger transmission of information

(for example, as taught by Corbett and Grimshaw), and common knowledge of the limitations of remote controllers, a POSITA would have been not only been motivated to modify a wireless communication module like that taught by Ono to include a physical actuator for triggering transmission of the image information, a POSITA would have also had a reasonable expectation of success in making such a modification.

g. Limitation 16(f, g): the base unit is adapted to display said user selected arbitrary media content on the first display in accordance with a set of rules wherein one of the rules is a forcing rule, whereby the forcing rule is that the display on the one or more first displays is obtained by the action of only one participant involved in the meeting, without requiring the agreement of another participant, the data of any participant for display overriding or replacing any data displayed on the one or more first displays by the same or another participant of the meeting

196. Ono discloses and/or suggests this limitation for the same reasons as discussed above regarding limitations 1(l), 1(m). (See Section IXA.2.)

4. Claim 19: running said program does not require installation of the program or configuration of the processing device

197. As discussed regarding limitation 16(d), the combined teachings of Ono, Deforche and Grimshaw disclose and/or suggest the limitation of claim 19.

D. Ground IV – Uchida, Deforche, and Grimshaw Disclose and/or Suggest the Features of Claims 1, 4-5, 8, 16, and 18-20

1. Rationale to combine

198. It is my opinion that Uchida, Deforche, and Grimshaw disclose similar systems for sending information wirelessly. (EX-1005, ¶¶2, 53-55; EX-1030, ¶¶9, 30; EX-1008, abstract). These systems would have required an operating system, such as the ubiquitous Windows operating system as discussed by Deforche. (EX-1030, ¶¶9, 30). Windows was well known to include standard USB drivers for various classes of devices, including USB mass storage and human-interface devices. (*Id.*). A driver is a term for a special form of software that provides an interface between hardware and application-level software, and is standard in all personal computers. Ono likely relied on such drivers but did not expressly state so, but Deforche does. (*Id.*). It is therefore my opinion that it would have been obvious that Ono would or at least could have used similar device well-known pre-installed generic Window's drivers, as disclosed by Deforche to enable Ono's USB peripheral devices. The combination of Ono and Deforche would have been nothing more than a predictable way of implementing Ono's system.

199. I have also determined that both Ono and Grimshaw and determined that they both disclose buttons or actuators for controlling display of images from user's PCs. (EX-1008, ¶¶5, 19-20, 27-28, FIGs. 1-4; EX-1005, ¶¶44-48, 66-71, 77-78, 80-89, FIGs. 3, 6, 8, 9). However, Grimshaw's button is on a USB device

connected to the PC in contrast with Ono's, which is on a separate remote control. (*Id*.) It is my opinion that it would have been a simple design choice to move Ono's button to other devices in the system, including the peripheral device as taught by Grimshaw. Grimshaw also discloses benefits of giving each user control of the display. (*Id*., ¶¶4-6, 28, 37). Moving or adding a button to Ono's peripheral device would have predictably resulted in a system similar to Grimshaw allowing the user to present their display onto the projector.

2. Claim 1

200. The combined teachings of Uchida, Deforche, and Grimshaw disclose and/or suggest the limitations of claim 1 as a whole. I have been asked to assume the preamble of claim 1 is limiting for the purposes of my analysis. If the preamble is not limiting, it would not affect my analysis for the limitations below.

a. Limitation 1(a): A method for connecting one or more processing devices … to a wireless communications network having a base node with one or more first displays

201. To the extent limiting, Uchida teaches limitation 1(a). For example, Uchida discloses a method for connecting computer device 4 (*e.g.*, "one or more processing devices") to a wireless LAN (Local Area Network) (*e.g.*, a "wireless communications network") having image projection device 3 (*e.g.*, a "base node")

with a screen (*e.g.*, "one or more first displays").[6] (*See*, *e.g.*, EX-1009, ¶¶0039-0042 (describing image projection system S), 0043-0059 (procedure for setting up wireless communication in image projection system S), 0153-0158, 0166, 0176, FIGs. 1-3, 14, 17, 18.)

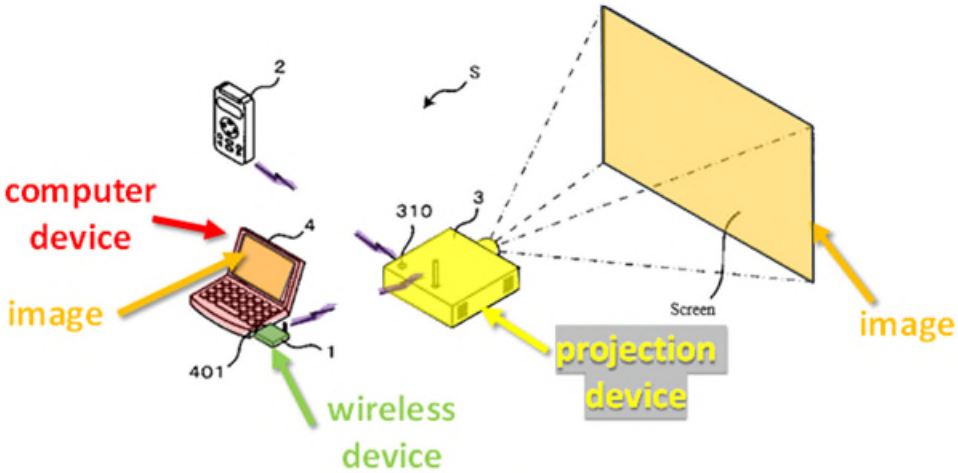

(EX-1009, FIG. 1.)

b. Limitation 1(b): each processing device being a user device of one participant in a meeting with a plurality of participants

202. To the extent limiting, Uchida teaches limitation 1(b). For example, Uchida describes computer device 4 as a personal computer (*e.g.*, a "user device") and illustrate a laptop computer in Fig. 1. (*See*, *e.g.*, EX-1009, ¶0039, FIG. 1.)

---

6 My identification of structure corresponding to the claim elements is exemplary only. For example, one or more components within image projection device 3 could alternatively be identified as a "base node" with a "first display."

Further, a POSITA would have readily understood that personal computers are capable of use by one participant in a meeting with a plurality of participants. (*See* EX-1009, ¶¶0003, 0012 (discussing "when an image projection device is shared among multiple groups"), 0036, 0037, 0058, 0112, 0186.)

c. Limitation 1(c): the one or more processing devices each having a memory, a second display and an operating system with at least one pre-installed generic driver providing a generic communications protocol for communication between the processing device and a class of peripheral devices,

203. To the extent limiting, Uchida teaches limitation 1(c). For example, Uchida discloses that computer device 4 (*e.g.*, the "one or more processing devices") having memory 406, LCD (display) 403 (*e.g.*, a "second display") and an operating system (OS). (*See*, *e.g.*, EX-1009, ¶¶0148-0152 ("The memory 406 also stores an operating system (OS) program."), FIG. 16 (below).)

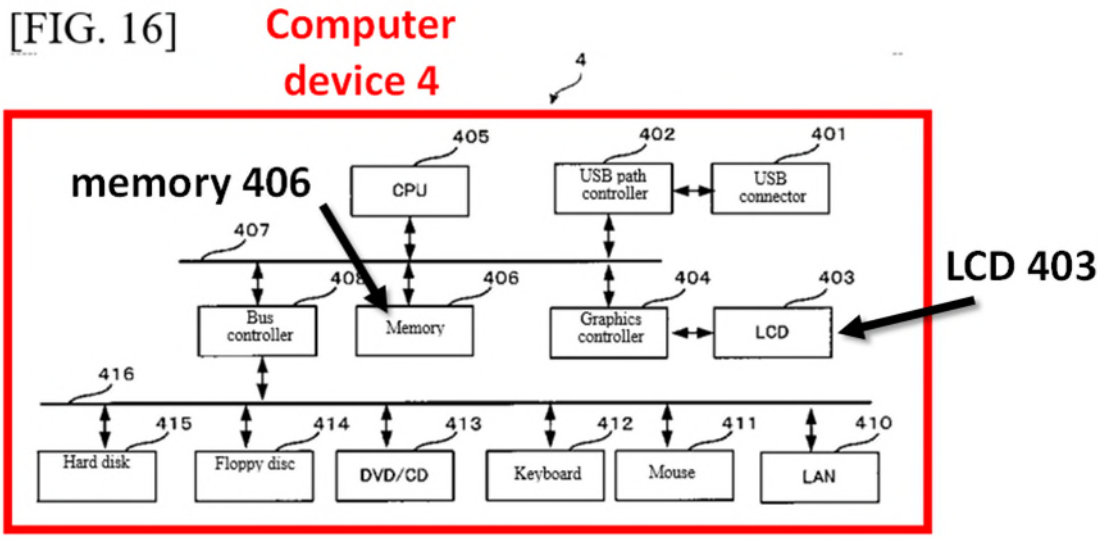

(EX-1009 Uchida, FIG. 16.)

204. A POSITA would have understood that the most common operating systems included standard drivers to communicate with various peripheral devices. While the particular drivers could vary depending on the operating system and change over time, Uchida discloses that computer device 4 was able to recognize wireless device 1 as a CD-ROM when connected—indicating that the operating system of computer device 4 included a standard USB mass storage driver which was able to communicate with CD-ROMs using a corresponding USB protocol. (*See*, *e.g.*, EX-1009, ¶¶0078, 0136; EX-1021, ¶¶0039-0042; EX-1058, ¶¶0125 ("The USB mass storage driver 202 is software to control mass storages such as a hard disk drive, CD-ROM, DVD-ROM, CD-R, DVD-R, USB memory, and the like."), 0132 ("Microsoft Windows(R) operating system 101 supports a USB device of mass storage class on a standard basis."); *see also* my discussion and evidence regarding claim 1 in Ground 1 (Section IX.A).) It is my opinion that Uchida's driver could also be a pre-installed generic driver because those were well known and disclosed by Deforche (Ex-1030, ¶¶0009-0010.)

205. Thus, a POSITA would have understood Uchida to disclose a computer device 4 including an operating system with mass storage device driver (*e.g.*, "pre-installed generic driver") which including the use of a corresponding protocol (e.g.,

a "generic communications protocol") for communication between a class of peripheral devices, such as mass storage devices.

d. Limitation 1(d): the method comprising the following steps for each processing device, the method comprising the following steps for each processing device: coupling a peripheral device to the processing device

206. Uchida discloses and/or suggests limitation 1(d). For example, Uchida discloses coupling a wireless device 1 (*e.g.*, a "peripheral device") to computer device 4 (*e.g.*, the "processing device"). (*See*, *e.g.*, EX-1009, ¶¶0039 ("The computer device 4 connects the USB connector 105 (see FIG. 3) described below in the wireless device 1, so that the wireless device 1 functions as a wireless unit and transmits image data to the image projection device 3 via the wireless device 1."), 0047-0048 ("[T]he USB connector 105 of the wireless device 1 is connected to the USB connector 401 of the computer device 4…."), 0066 ("The USB connector 105 is a general purpose USB connector and can be connected to the USB connectors 201, 401 of the remote control device 2 and the computer device 4."), FIGs. 1-3.)

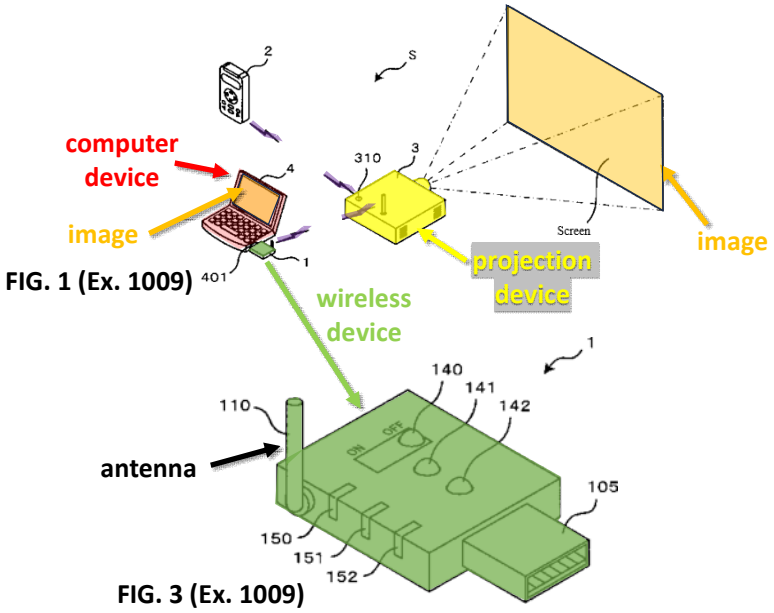

(EX-1009, FIGs. 1 and 3.)

e. Limitation 1(e): the peripheral device having a wireless transceiver

207. Uchida discloses and/or suggests limitation 1(e). For example, Uchida discloses wireless device 1 (*e.g.*, the "peripheral device") includes wireless communication unit 107 (*e.g.*, a "wireless transceiver"). (*See*, *e.g.*, EX-1009, ¶¶0053, 0062, 0068 ("The wireless communication unit 107 has an antenna 110, an RF unit 111, and a baseband unit 112, and is capable of transmitting and receiving data based on the wireless LAN standard."), 0176, FIGs. 3, 5.)

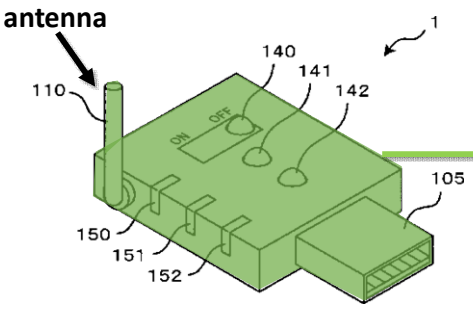

FIG. 3 (Ex. 1009)

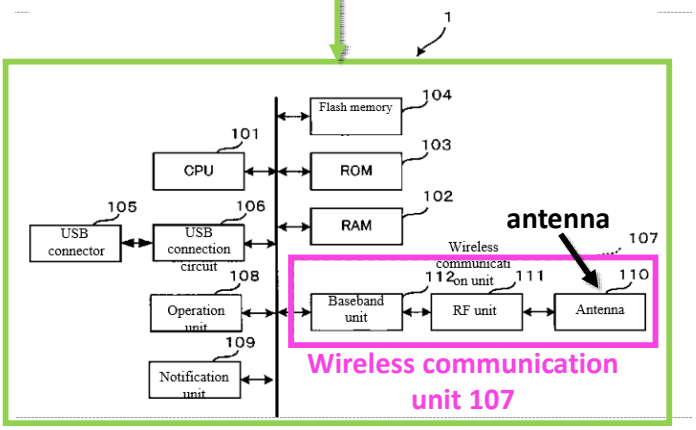

FIG. 5 (Ex. 1009)

(EX-1009, FIGs. 3 and 5.)

f. Limitation 1(f): setting up, by means of the pre-installed generic driver of the operating system, a means for communication between the peripheral device and the processing device

208. Uchida discloses and/or suggests limitation 1(f). For example, Uchida discloses setting up, by means of the USB mass storage driver (*e.g.*, a "pre-installed generic driver") of the operating system, a "means of communication" using a USB protocol and a USB interface between the wireless device 1 and the computer device 4. (*See*, *e.g.*, EX-1009, ¶¶0039, 0048, 0066, 0076-79, 0150, 0163-165, FIGs. 5-7, 17, 18.) When wireless device 1 is connected to the computer device 4, communication is setup between the USB connector 401 of the computer device 4 and the USB connector 105 of the wireless device 1. (EX-1009, ¶0039, 0048, 0066,

0076-0079, 0150, 0163-0165.) Uchida explains the following process then occurs: "[a]s shown in FIG. 17, the CPU 405 of the computer device 4 determines whether or not the wireless device 1 is connected (step S300)." (EX-1009, ¶0154.) "To determine whether or not wireless device 1 is connected, it is determined whether or not a USB device is connected to USB connector 401, and when a USB device is connected, it is further determined whether this USB device has specific identification information." (*Id*.) "In this process, if it is determined that wireless device 1 has been inserted (step S300: YES), the CPU 405 starts the auto-run operation process (step S301)," which "corresponds to steps S320 to S327 in FIG. 18. (EX-1009, ¶0155.) "This auto-run operation works by having the CPU 405 recognize the wireless device 1 as a CD-ROM when the wireless device 1 is connected, using the function of the CD-ROM recognition unit 125 of the wireless device 1, and automatically reading the information of the wireless device 1." (EX-1009, ¶0163.) Communication through USB interface function unit 120 (which corresponds to the USB connector 105 and the USB connection circuit 106 in FIG. 5) is "based on the USB standard." (EX-1009, ¶0077.) Based on this disclosure, a POSITA would have understood that a USB mass storage device driver (already installed with the operating system of computer device 4) recognizes wireless device 1 as a CD-ROM device and is thus able to setup communication via a corresponding USB protocol (which is required by the USB standard).

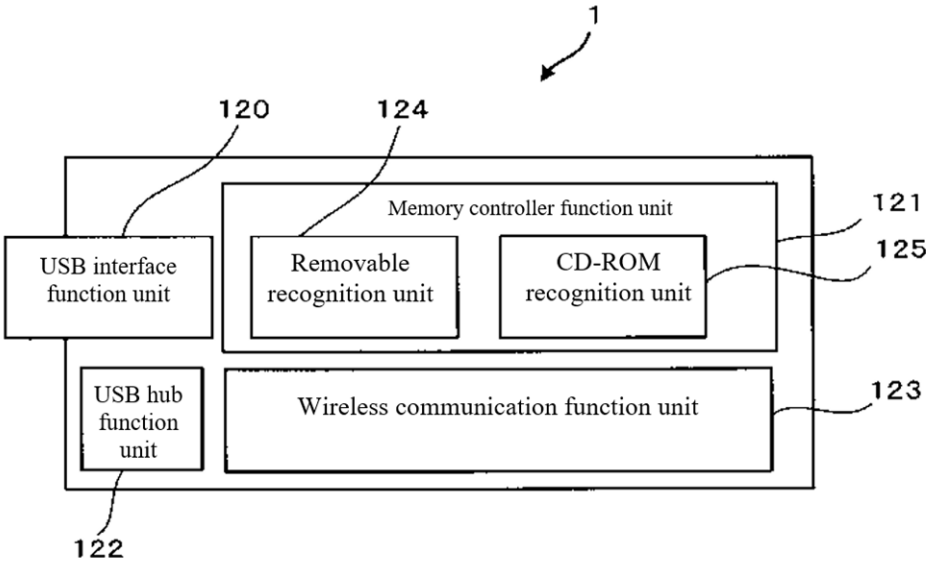

(EX-1009, FIG. 6.)

209. Uchida's use of a "pre-installed generic driver" is also evidenced by Deforche. Deforche recognizes that "[u]sually, a user needs to install proprietary drivers before he/she can use a USB network device." (EX-1030, ¶0030.) Deforche, however, proposes using USB class drivers supported without any extra installation in all [operating systems (OS)." (*Id*.) In particular, Deforche proposes using a "pre-installed generic driver of an operating system installed on the computer device [] for setting up a modem/host communication interface by means of which the wireless modem device and the computer device can communicate with each other." (EX-1030, ¶0009.) According to Deforche, examples of such drivers includes a "human interface driver (HID, which has predetermined software components configured for driving a human interface device such as a mouse, keyboard or other" and "a mass storage device (MSD) driver, which has predetermined software

components configured for driving mass storage devices such as USB memory sticks, external hard drives, or more generally readable and writeable computer peripheral memory devices." (EX-1030, ¶0010.) Deforche explains that a generic driver can be used to setup a communication interface using a generic driver and by using a generic communication protocol. (EX-1030, ¶0011.) For example, Deforche describes a USB modem may present itself as a "MSD+HID generic device," including presenting itself as a USB mass storage device (MSD) with a CD-ROM. (EX-1030, ¶0034; *see also id*., ¶¶0040-0041.) Thus, when Uchida describes that the operating system recognizes the wireless device as a CD-ROM, a POSITA would have understood that the operating system of computer device 4 is setting up communication with the wireless device using a mass storage driver.

210. Further, Deforche's techniques (to the extent they varied from those of Uchida) could also have been used to set up communication with a wireless modem device, like Uchida's wireless device 1. Deforche discloses "setting up, by means of a pre-installed generic driver of the operating system on the computer device, a modem/host communication interface (6) for communication between the wireless modem device and the computer device." (EX-1030, Abstract, ¶¶0009-0011, 0017-0018, 0031.) As discussed in greater detail below with respect to limitation 1(h), a POSITA also would have been motivated to implement these teachings from Deforche in setting up wireless communication through a peripheral device using a

pre-install generic driver. Deforche explains that this "has the advantage the user can use the wireless modem device on a computer device on which he has no administrative rights, i.e., a computer device on which … he cannot install a specific driver for the wireless modem device." (EX-1030, ¶0009.) A POSITA would have had a reasonable expectation of success in implementing such a solution given the guidance of Deforche and the general ubiquity and predictability of the technology.

g. Limitation 1(g): coupling the processing device to the wireless communications network via the peripheral device

211. Uchida discloses and/or suggests limitation 1(g). For example, Uchida discloses coupling computer device 4 (*e.g.*, the "processing device") to the wireless communications network via wireless device 1 (*e.g.*, the "peripheral device") (*See*, *e.g.*, EX-1009, ¶¶0040-0041, 0065, 0068, 0090, 0165-00167, FIGs. 8, 17-18.)

212. Specifically, in connection with the process of Figure 18, Uchida discloses that "CPU 405 launches a wireless setting application (step S322) and reads the wireless setting information stored in the wireless device 1 via the USB connector 401 (step S323)." (EX-1009, ¶0165.) "The CPU 405 then configures the WLAN (Wireless LAN) network by executing the wireless configuration application (step S324). (EX-1009, ¶0165.) "CPU 405 transmits the wireless setting information to the wireless device 1 via the USB connector 401, and the wireless device 1 configures the WLAN network according to this wireless setting

information." (EX-1009, ¶0166.) "When the processing of step S324 is completed, the CPU 405 determines whether wireless communication with the image projection device 3 is established via the wireless device 1." (EX-1009, ¶0167.) In this way, computer device 4 couples to the wireless LAN via wireless device 1.

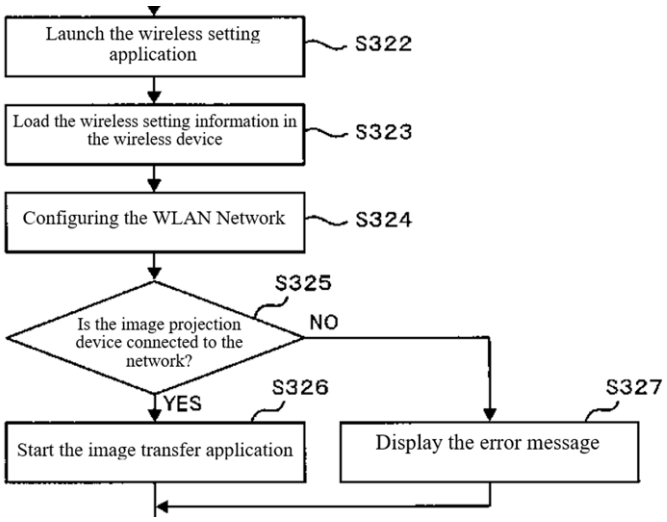

(EX-1009, FIG. 18 (excerpted).)

h. Limitation 1(h): running a client application stored on the peripheral device to obtain screen scraped data

213. Uchida and Deforche disclose and/or suggest this limitation. For example, Uchida discloses running an image transfer application program (*e.g.*, "client application) stored on wireless device 1 (*e.g.*, the "peripheral device") to obtain display image data (*e.g.*, screen scraped data"). (*See*, *e.g.*, EX-1009, ¶¶0020, 0048 ("When the USB connector 105 of the wireless device 1 is connected to the USB connector 401 of the computer device 4, the computer device 4 installs … an image transfer application program (hereinafter abbreviated as 'image transfer

application') stored in the program storage unit of the wireless device 1."), 0078, 0081, 0167 ("[I]f it is determined that a network connection with the image projection device 3 has been established (step S325: YES), the CPU 405 launches an image transfer application (step S326)."), 0052, 0148, 0158, 0169, claim 8, FIGs. 6-7, 18.)

214. Uchida explains that the image data corresponds to "the screen displayed on the LCD 403, which is the display unit of the computer device 4." (EX-1009, ¶¶0158; *see also id.*, ¶0003.) While a POSITA would have recognized from Uchida's disclosures that the content of the transmitted image data is "screen scraped data," a POSITA looking to implement an image projection system like Uchida would have considered and utilized well-known screen scraping algorithms. Indeed, the '676 patent acknowledges that screen scraping was known in the art (EX-1001, 13:59-62) and could have been predictably implemented in an image display system like that of Uchida using known techniques, for instance, as described in Slobodin, which is directed to wireless transmission of screen scraped data to a projector (*see, e.g.*, EX-1033, ¶¶0011-0012).

215. Further, while Uchida's image transfer application is loaded and installed onto computer device 4, an alternative design choice would have been to simply load the application without requiring installation on the computer device. Deforche, for example, describes running an application as a portable application

from a peripheral device that does not require installation. (*See, e.g.*, EX-1030, ¶¶0014-0016, 0028-0030.) Deforche explains that this has the advantage ease of use and "Zero Footprint," i.e., avoiding modification to settings in the kernel protocol stack or in the operating system and in general any traces on the computer device so that if the wireless device is disconnected leaving the computer as if the wireless device had never been used on the computer. (*Id*.)

216. Therefore, given Deforche's teachings, a POSITA would have been motivated to implement a technique like of Deforche to run a client application stored on a peripheral device (like the wireless device of Uchida) to obtain screen scraped data for advantages described by Deforche. A POSITA would have had a reasonable expectation of success in implementing such a solution given the guidance of Deforche and the general ubiquity and predictability of the technology.

i. Limitation 1(i): routing the screen scraped data between the processing device and the wireless communications network via the means for communication for display on the one or more first displays of the base node

217. Uchida discloses and/or suggests limitation 1(i). For example, Uchida discloses routing the display image data (*e.g.*, "screen scraped data") between the computer device 4 (*e.g.*, the "processing device") to the wireless communications network via wireless device 1 (*e.g.*, the "peripheral device") (and hence via USB interface function unit 120/USB connection 105 and wireless communication unit

107) for display on the image projections screen (*e.g.*, the "one or more first displays of the base node"). (*See*, *e.g.*, EX-1009, ¶¶0158.) Specifically, Uchida explains that the image data corresponds to "the screen displayed on the LCD 403, which is the display unit of the computer device 4." (EX-1009, ¶¶0158.) "CPU 405 transmits display image data to the wireless device 1 via the USB connector 401, which then transmits the data from the wireless device 1 to the image projection device 3 via wireless communication." (*Id*.) "When the image projection device 3 receives the display image data transmitted in this manner, it projects an image based on the display image data onto a screen." (*Id*.)

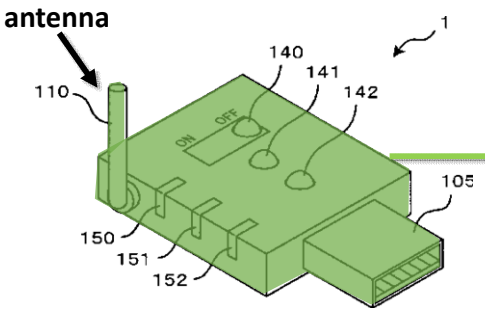

FIG. 3 (Ex. 1009)

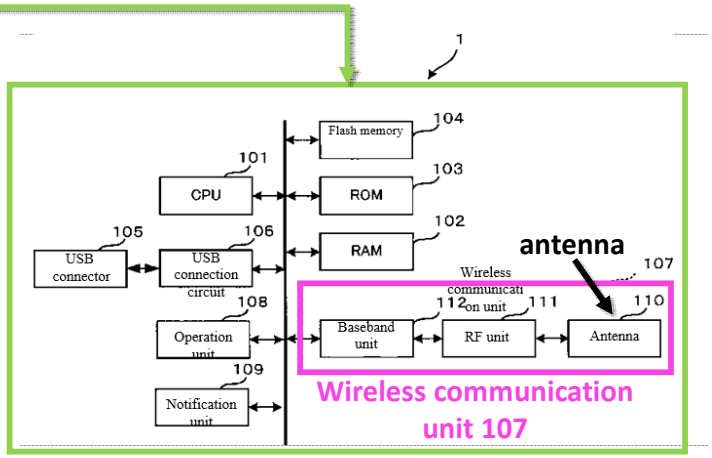

FIG. 5 (Ex. 1009)

(EX-1009, FIGs. 3, 5.)

j. Limitation 1(j): wherein the generic communication protocol is used for transferring the screen scraped data for display between the processing device and the peripheral device

218. Uchida and Deforche discloses and/or suggests limitation 1(j). For example, Uchida discloses a generic communication protocol compliant with USB standards is used for transferring the image data (*e.g.*, "screen scraped data") for display between computer device 4 (*e.g.*, the "processing device") and wireless device 1 (*e.g.*, the "peripheral device"). (*See*, *e.g.*, EX-1009, ¶¶0077, 0163; (EX-1030, ¶¶0009, 0011, Abstract.) Specifically, Uchida explains that communication through USB interface function unit 120 (which corresponds to the USB connector 105 and the USB connection circuit 106 in FIG. 5) is "based on the USB standard," which a POSITA would have understood to include the use of standard communication protocol applicable to a class of devices, such as a CD-ROM (which is how the wireless device 1 presents itself to the computer device 4). (*Id*.)

219. Further, the combination of Uchida and Deforche described above also suggests the use of a generic communications protocol in implementing Deforche's techniques. For example, Deforche discloses that "the wireless modem device can communicate with he computer device by using the generic communication protocol provided by the generic driver." (EX-1030, ¶0011, *see also id*., Abstract, ¶0009.) For the same reasons discussed regarding the Uchida-Deforche combination, a

POSITA would have been motivated to implement the use of a generic communication protocol as provided by a pre-installed generic driver as was conventionally employed.

k. Limitation 1(k): obtaining electronic access to the one or more first displays for display of the screen scraped data

220. Uchida discloses and/or suggests limitation 1(k). For example, Uchida discloses obtaining electronic access to the image projection device 3 and screen (*e.g.*, "one or more first displays") for display of the image data (*e.g.*, the "screen scraped data"). (*See*, *e.g.*, EX-1009, ¶¶0048-0052, 0176 ("When the processing of step S324 is completed, the CPU 405 determines whether wireless communication with the image projection device 3 is established via the wireless device 1, in other words, whether a network connection with the image projection device 3 is established (step S325). In this process, if it is determined that a network connection with the image projection device 3 has been established (step S325: YES), the CPU 405 launches an image transfer application (step S326).)".)

l. Limitation 1(l): displaying the screen scraped data on the one or more first displays in accordance with a set of rules

221. Uchida discloses and/or suggests limitation 1(l). For example, Uchida discloses displaying image data (*e.g.*, the "screen scraped data") on screen of image projection device 3 (*e.g.*, "one or more first displays"). (*See*, *e.g.*, EX-1009, ¶¶0052

("[A]s shown in FIG. 2(c), image data is sent from the computer device 4 to the image projection device 3 via the wireless device 1 by executing an image transfer application on the computer device 4, and the image projection device 3 projects an image based on the image data onto a screen."), 0176, FIG. 1, 17, 18.) Uchida also describes several different rules regarding display. (*See, e.g.*, EX-1009, ¶¶0070-0071, 0136-0146.)

m. Limitation 1(m): one of the rules being a forcing rule, wherein the forcing rule is that display on the one or more first displays of new screen scraped data is obtained by the action of only one participant involved in the meeting, without requiring the agreement of another participant, the new screen scraped data of any participant for display overrides or replaces any data displayed on the one or more first displays from the same or another participant of the meeting

222. The Uchida-Deforche-Grimshaw combination disclose and/or suggest limitation 1(m). For example, Grimshaw is directed to a communication system that allows users in a meeting to share media content and other conferencing functions. (EX-1008, ¶0002; EX-1012, 1:4-7; *see also* Section VII.L (Grimshaw Summary).) Grimshaw, like the '676 patent, addresses the ability of the users of the system to control what is displayed on a shared display module. (*See* EX-1008, ¶¶0019-0020; EX-1012,5:8-6:17; EX-1001, 6:60-7:3.) Thus, Grimshaw is from the same field as the '676 patent and addresses a similar problem.

223. Grimshaw describes the following scenario in a meeting room context:

consider the case where separate laptop computers are connected to user modules 14-20 and are vying for control of the display module 22; that is, each of the connected computers is outputting data signals through data connections 342, 352, 362, 372 for presentation on display module 22. The display module 22 may not simultaneously display the information from all four computers/user modules. (EX-1008, ¶0019.)

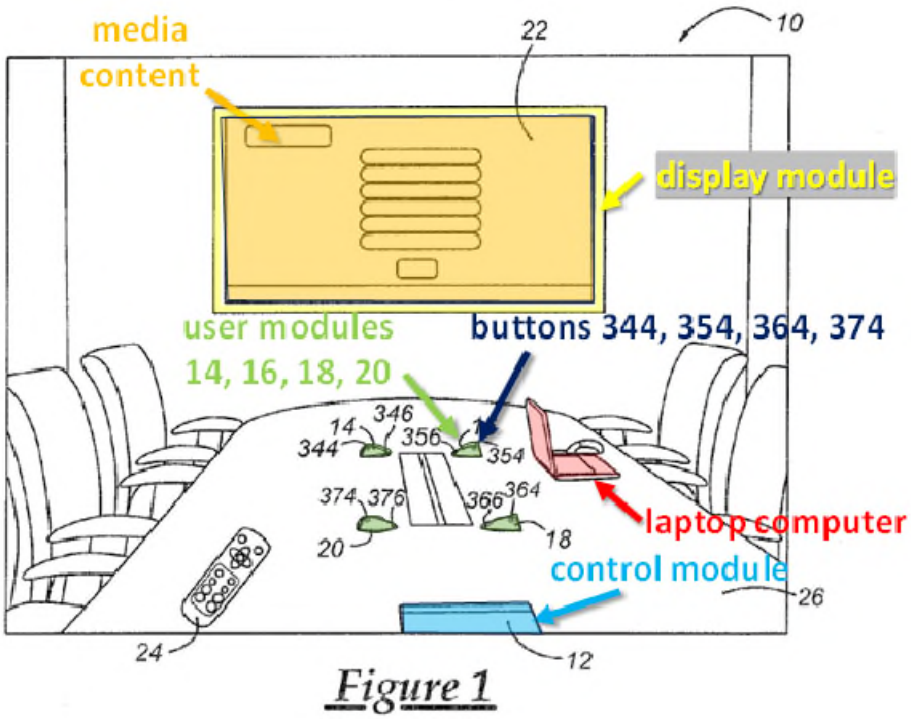

(EX-1008, FIG. 1.)

224. A POSITA would have understood this problem and sought out known design options and solutions. (*See*, *e.g.*, Section V.A. (discussing similar problems and solutions); (*see additionally*, EX-1013, ¶¶0002, 0031, 0048-49, FIG. 2.) Grimshaw describes a set of "user modules" can be coupled to each user's laptop

computer, which connect the laptops to a shared display module. (EX-1008, ¶¶0005-0006, 0012, 0019-0020, 0023-0024, 0026-0027.) Each user modules includes a button that allows the user to forcibly switch control over the display module. (EX-1008, ¶0020.) Grimshaw states that:

> [a] user may engage or push a button 344, 354, 364, 374 on their user module in order to take control of display module 22 (e.g., display module 22 could show whatever is currently being displayed on the screen of the laptop computer connected to the selected user module). (EX-1008, ¶0020.)

Grimshaw then explains possible ways to implement this functionality, stating:

> In the example above, controller 324 reviews the status of buttons 344, 354, 364, 374, determines that user module 14 has been selected, and sends command signals to switch controller 318, video processor 316 and/or converter 320 instructing them to pass the data signals from the selected user module 14 to display module 22. It is possible for controller 324 to review the status of each user module 14-20 or only those user modules that have a laptop computer or other device connected thereto, to cite a few possibilities. Controller 324 is not limited to this example, as it may gather information, make decisions, and issue command signals for a variety of other tasks as well. (EX-1008.)

Hence, Grimshaw describes a set of rules, including a "forcing rule" where, by the action of only one participant involved in the meeting, new screen data from the

laptop of that participant overrides or replaces any data displayed on the display module without requiring the agreement of another participant (including the one whose screen was being displayed).

225. Given the known problem and the known solutions described by Grimshaw and others (see Section V.A.), a POSITA would have been motivated to implement a method of connecting processing devices and displays (similar to those of Uchida) according to a "forcing rule," for example as described by Grimshaw. A POSITA would have found such solutions advantageous in solving known problems such as when multiple users wish to display content on a shared display. A POSITA would have had a reasonable expectation of success in implementing such a solution (*e.g.*, employing buttons and other well-known hardware/software components to trigger transmission of images and override or replace prior image data) given the simplicity of such common technology.

3. Claim 4: The method of claim 1, wherein the peripheral device has an actuator, the method further comprising a user action on the actuator that triggers transfer of the data for display from the processing device to the wireless transceiver and from there to the wireless communications network

226. Uchida discloses and/or suggests limitation. For example, Uchida discloses wireless device 1 (*e.g.*, the "peripheral device") has an image transfer stop switch 140 (*e.g.*, an "actuator) that slides between ON and OFF position to control the transfer of the display image data for display from computer device 4 (*e.g.*, the

"processing device") to wireless communication unit 107 (*e.g.*, the "wireless transceiver") and from there to the wireless communications network. (*See*, *e.g.*, EX-1009, ¶¶0070-0072.) Uchida discloses that when the "image stop" switch is in the ON position, the image transfer application transmits a request to the image projection device 3 via the wireless communication unit 107 to project a specific image (a black screen image) on the image projection device 3. (*Id.*) A POSITA would have understood that reversing the slide switch back to OFF would resume (*i.e.*, trigger image transfer).

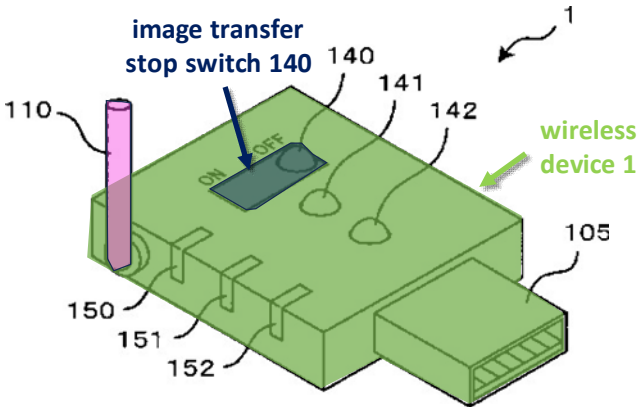

(EX-1009, FIG. 3.)

4. Claim 5: The method of claim 1, wherein step b) is selected from:

presenting the peripheral device to the processing device as a human interface device and wherein the pre-installed generic driver is a human interface device driver,

presenting the peripheral device to the processing device as a mass storage device and wherein the pre-installed generic driver is a mass storage device driver

presenting the peripheral device to the processing device as a composite device and wherein the pre-installed generic driver is a mass storage device driver, wherein the different pre-installed generic drivers drive different device interfaces independently

227. Uchida discloses and/or suggests limitation. For example, Uchida discloses presenting the wireless device 1 (*e.g.*, the "peripheral device") to computer device 4 (*e.g.*, the "processing device") as a mass storage device and a POSITA would have understood that the pre-installed generic driver is a mass storage device driver as discussed in regard to claim 1. (See Section IX.D.2.)

5. Claim 8: transferring of the data for display is to a defined network node without user entry of configuration details

228. Uchida alone and in combination with Deforche discloses and/or suggests that transferring of the image data for display is to a defined network node (image projection device 3) without user entry of configuration details. (*See*, *e.g.*, EX-1009, ¶¶0042, 0166.)

6. Claim 16

229. The combined teachings of Uchida and Grimshaw disclose and/or suggest all the limitations of claim 16 as a whole.

a. Limitation 16(pre): An electronic meeting tool for communicating arbitrary media content, being data for display, from users at a meeting

230. I have been asked to assume the preamble of claim 1 is limiting for the purposes of my analysis. If the preamble is not limiting, it would not affect my analysis for the limitations below.

231. Uchida and Grimshaw discloses and/or suggests limitation 16(pre). For example, Uchida discloses an image display system S (*e.g.*, an "electronic meeting tool" for communicating display image data (*e.g.*, "arbitrary media content") being data for display, from users at a meeting. (*See*, *e.g.*, EX-1009, ¶¶0012 (discussing "when an image projection device is shared among multiple groups"), 0036, 0037, 0058, 0112, 0158, 0186.)

232. As discussed above, I understand that the '676 patent states that "the term 'arbitrary media content' refers to "the fact that a user may generate, create or select any media content that is appropriate to display, i.e., on an ad hoc basis." (EX-1001, 13:50-58.) As discussed further below, Uchida's image projection system enables display of an image data based on the image data of LCD display 403 (*e.g.*, "data for display") of computer device 4. Said differently, Uchida's system enables a projector to display what is on a user's computer screen. Uchida's image data is thus consistent with description of "user selected arbitrary media content" provided by the '676 patent.

b. Limitation 16(a): the tool comprising a base unit of a wireless communications network, the base unit being coupled to one or more first displays

233. Uchida discloses and/or suggests limitation 16(a). For example, Uchida discloses a image projection device 3 (*e.g.*, a "base unit") of a wireless communications network, the image projection device being coupled to a screen (*e.g.*, "one or more first displays"). (*See*, *e.g.*, EX-1009, ¶¶0124-0134, 0166-0167, FIGs. 1, 8, 14, 18.)

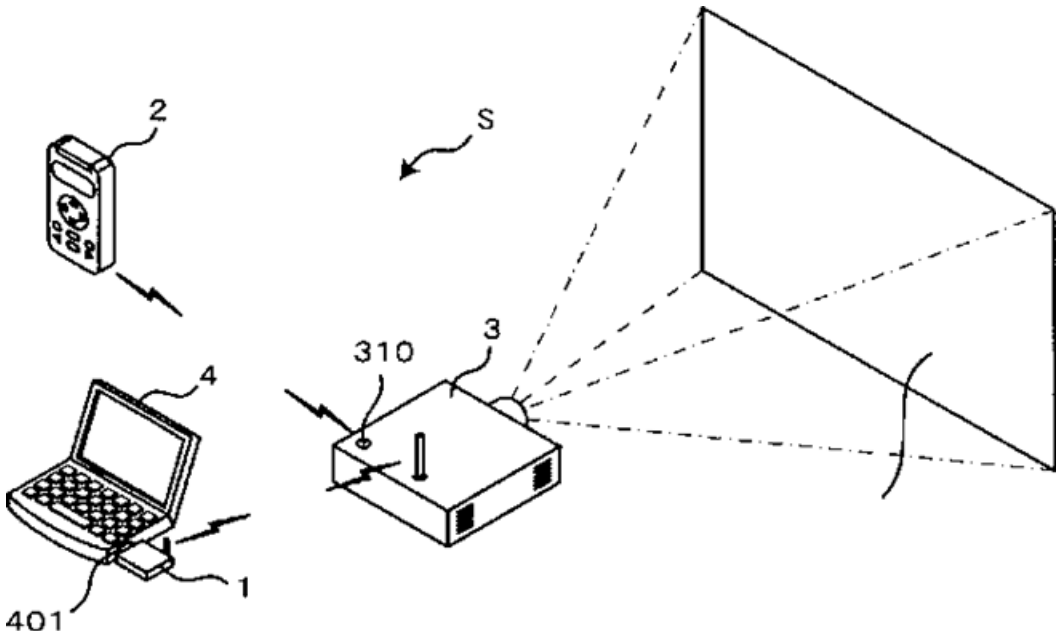

(EX-1009, FIG. 1.)

c. Limitation 16(b): the base unit being adapted to receive user selected arbitrary media content from a processing device via the wireless communications network, and to control display of the user selected arbitrary media content on the one or more first displays

234. Uchida discloses and/or suggests limitation 16(b). For example, Uchida discloses image projection device 3 (*e.g.*, the "base unit") being adapted to receive image data (*e.g.*, "user selected arbitrary media content") from computer device 4 (*e.g.*, a "processing device") via the wireless communications network, and to control display of the image data on the screen (*e.g.*, the "one or more first displays"). (*See*, *e.g.*, EX-1009, ¶¶0039, 0124-0129, 0137-0146, 0158 ("When the image projection device 3 receives the display image data transmitted in this manner, it projects an image based on the display image data onto a screen."), 0176 ("[I]mage projection device 3 [] projects an image according to the image data received by the wireless unit 306."), FIG. 15; *see also* my discussion of claim limitation 16(pre).)

d. Limitation 16(c): at least one peripheral device adapted to communicate the user selected arbitrary media content from the processing device to the base unit via the wireless communications network

235. Uchida discloses and/or suggests limitation 16(c). For example, Uchida discloses wireless device 1 (*e.g.*, "at least one peripheral device") adapted to communicate the image data from computer device 4 (*e.g.*, the "processing device") to image projection device 3 (*e.g.*, the "base unit") via the wireless communications

network. (*See*, *e.g.*, EX-1009, ¶¶0039-0041 ("The computer device 4 connects the USB connector 105 (see FIG. 3) described below in the wireless device 1, so that the wireless device 1 functions as a wireless unit and transmits image data to the image projection device 3 via the wireless device 1."), 0065, 0068, 0090, 0165-00167, FIGs. 8, 17-18.)

236. More specifically, Uchida discloses that "CPU 405 transmits the wireless setting information to the wireless device 1 via the USB connector 401, and the wireless device 1 configures the WLAN network according to this wireless setting information." (EX-1009, ¶0166.) "When the processing of step S324 is completed, the CPU 405 determines whether wireless communication with the image projection device 3 is established via the wireless device 1." (EX-1009, ¶0167.) "[I]f it is determined that a network connection with the image projection device 3 has been established (step S325: YES), the CPU 405 launches an image transfer application (step S326)." (EX-1009, ¶0167.)

e. Limitation 16(d): a program adapted to be loaded onto the processing device and to run on an operating system of the processing device, said program being adapted to obtain user selected arbitrary media content from the processing device

237. Uchida discloses and/or suggests limitation 16(d). For example, Uchida discloses an image transfer application (*e.g.*, a "program") which is loaded onto computer device 4 (*e.g.*, the "processing device") and run on its operating

system to obtain image data (*e.g.*, "user selected arbitrary media content") from computer device 4. (*See*, *e.g.*, EX-1009, ¶¶0048, 0052 ("[I]mage data is sent from the computer device 4 to the image projection device 3 via the wireless device 1 by executing an image transfer application on the computer device 4…."), 0054 ("[I]mage data is sent from the computer device 4 to the image projection device 3 via the wireless device 1 by executing an image transfer application on the computer device 4."), 0078, 0081 ("When the image transfer application is installed on the computer device 4, it causes the computer device 4 to function as an image transmission means that controls the wireless device 1 and transmits the image data from the computer device 4 to the image projection device 3"), 0083, 0152, 0156, 0167, 0176.)

238. Further, while Uchida's image transfer application is loaded and installed onto computer device 4, an alternative design choice would have been to simply load the application without requiring installation on the computer device. Deforche, for example, describes launching an application to setup wireless transfer of data as a portable application that does not require installation as discussed above. For the reasons discussed regarding limitation 1(h), a POSITA would have been motivated to implement as least an image transfer application like that of Uchida as a portable application.

f. Limitation 16(e): an input device to allow the user to carry out a user action that triggers transfer of said user selected arbitrary media content from said processing device to a transmitter and to the wireless communications network, the input device being an actuator coupled to the peripheral device

239. Uchida discloses and/or suggests limitation 16(e). For example, Uchida discloses an image transfer stop switch 140 (*e.g.*, an "input device") to allow the user to slide the switch (*e.g.*, "carry out a user action") that controls transfer of image data (*e.g.*, "user selected arbitrary media content") from computer device 4 (*e.g.*, "processing device") to a wireless communication unit 107 (*e.g.*, "transmitter") and to the wireless communications network, where the image transfer stop switch 140 is changeover switch (*e.g.*, an "actuator") directly coupled to wireless device 1 (*e.g.*, the "peripheral device"). (*See*, *e.g.*, EX-1009, ¶¶0052-0053, 0065-0072.) Uchida further discloses that image transfer stop switch 140 slides between ON and OFF position. When the "image stop" switch is in the ON position, the image transfer application transmits a request to the image projection device 3 via the wireless communication unit 107 to project a specific image (a black screen image) on the image projection device 3. (*Id.*) A POSITA would have understood that reversing the slide switch back to OFF would resume (*i.e.*, trigger image transfer).

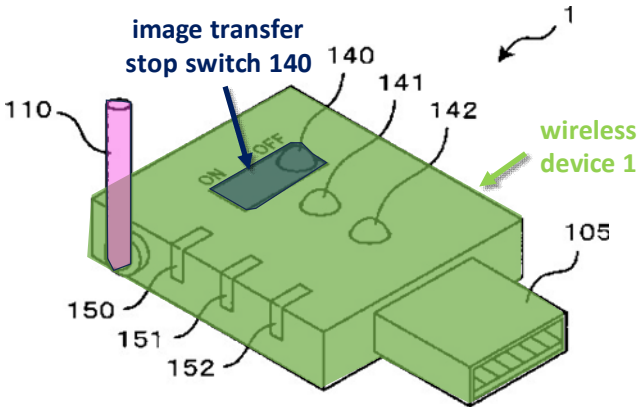

(EX-1009, FIG. 3.)

240. Beyond Uchida's disclosure, a POSITA would have also been motivated to include an input device to allow individual users the ability to override or switch the source of the display via the wireless device. For example, Grimshaw is directed to a communication system that allows users in a meeting to share media content and other conferencing functions. (EX-1008, ¶0002; EX-1012, 1:4-7; *see also* Section VIII.L (Grimshaw Summary).) Grimshaw, like the '676 patent, addresses the ability of the users of the system to control what is displayed on a shared display module. (*See* EX-1008, ¶¶0019-0020; EX-1012,5:8-6:17; EX-1001, 6:60-7:3.) Thus, Grimshaw is from the same field as the '676 patent and addresses a similar problem.

241. In particular, Grimshaw discloses buttons 344, 354, 364, 374 (*e.g.*, an "input device") on respective user modules 14, 16, 18, 20 configured to allow the user to carry out engaging or pushing (*e.g.*, a "user action") of the buttons that

triggers transfer of the data signal (*e.g.*, "user selected arbitrary media content") from a user module to the control module 12 for display on the display module 22. (*See*, *e.g.*, EX-1008, ¶¶0005, 0019 ("[C]onsider the case where separate laptop computers are connected to user modules 14-20 and are vying for control of the display module 22.... [T]he users of modules 14, 16, 18, 20 can take control of the display module 22 by respectively engaging buttons 344, 354, 364, 374, which causes switch controller 318 to pass the data signals from the selected user module on to the display module."), 0020 ("[A] user may engage or push a button 344, 354, 364, 374 on their user module in order to take control of display module 22 (e.g., display module 22 could show whatever is currently being displayed on the screen of the laptop computer connected to the selected user module).") 0027-0028, FIGs. 1-4; EX-1012,5:8-6:17, 8:29-9:20, FIGs. 1-4.) Based on Grimshaw's disclosure a POSITA would have understood that buttons 344, 354, 364, 374 constitute actuators coupled to the user modules 14, 16, 18, 20, as depicted in Figure 3 for example.

242. A POSITA looking to implement an image projection system like that of Uchida would have considered situations and looked to address common issues raised by conference setting where multiple users may look to share media content on a single display. (*See*, *e.g.*, EX-1009, ¶¶0001-0012, 0036-0037.) A POSITA would have therefore been motivated to employ a technique and components to address the problem where multiple users are "vying for control" of a shared display,

one technique of which as described by Grimshaw. A POSITA would have therefore been motivated to implement a similar solution of providing an actuator on a peripheral device (like Uchida's wireless device) to allow each user to carry out a user action that triggers transfer of media content/image data to a base unit and display (like the image projector and screen of Uchida) to enhance users control over what is displayed (as taught by Grimshaw). A POSITA would have had a reasonable expectation of success in implementing such a modification given that Uchida describes an actuator to provide a measure of control over the image data transmission from an individual peripheral device, direction provided by Grimshaw (e.g., using button and switching control), and the simplicity and predictability of the hardware/software components involved.

g. Limitation 16(f): the base unit is adapted to display said user selected arbitrary media content on the first display in accordance with a set of rules

243. Uchida discloses and/or suggests limitation 16(f) for the same reasons as discussed above regarding limitation 1(l). (See Section IX.D.2.l.)

h. Limitation 16(g): wherein one of the rules is a forcing rule, whereby the forcing rule is that the display on the one or more first displays is obtained by the action of only one participant involved in the meeting, without requiring the agreement of another participant, the data of any participant for display overriding or replacing any data displayed on the one or more first displays by the same or another participant of the meeting

244. The combined teachings of Uchida and Grimshaw disclose and/or suggest limitation 16(g) for the same reasons as discussed above regarding limitation 1(m). (See Section IX.D.2.m.)

7. Claim 18: The method according to claim 1, wherein running said program does not require installation of the program or configuration of the processing device

245. The combined teachings of Uchida and Deforche disclose and/or suggest running a program does not require installation of the program or configuration of the processing device. (*See, e.g.*, EX-1030, ¶¶0025-0027, 0047; *see also id*., ¶¶0015, 0018, 0026-0027, 0030-0031, 0047.)

8. Claim 19: running said program does not require installation of the program or configuration of the processing device

246. As discussed regarding limitation 16(d), the combined teachings of Uchida and Deforche disclose and/or suggest the limitation of claim 19.

9. Claim 20: The method according to claim 1, further comprising a program adapted to be loaded onto the processing device and to run on an operating system of the processing device, said program being adapted to obtain the media content from the processing device, running said program on the processing device does not require installation of the program or configuration of the processing device.

247. *See* Sections IX.D.2.h (Ground IV (limitation 1(h) and claim 18); EX-1002, ¶¶xxx).

E. Ground IV – Uchida and Grimshaw Disclose and/or Suggest the Features of Claim 14

1. Rationale to combine

248. *See* Section IX.D.1 for rationale to combine Uchida and Grimshaw. Claim 14 is similar to claim 1 but does not require Deforche's pre-installed generic driver.

2. Claim 14

249. The combined teachings of Uchida and Grimshaw disclose and/or suggest the limitations of claim 14 as a whole.

a. Limitation 14(pre): A method for providing communication connectivity from a processing device, the processing device being a user device of a participant in a meeting with a plurality of participants, the method comprising the following steps

250. I have been asked to assume the preamble of claim 1 is limiting for the purposes of my analysis. If the preamble is not limiting, it would not affect my analysis for the limitations below.

251. The combination of Uchida and Grimshaw discloses and/or suggests this limitation for reasons similar to those I explained above for limitation 1(a) and 1(b). (*See* analysis in Section IX.D.2.)

b. Limitation 14(a): the method comprising the following steps: setting up a communications network between a base node of the communications network and a peripheral device coupled to the processing device

252. Uchida discloses and/or suggests limitation 14(a). For example, Uchida discloses setting up a communications network between image projection device 3 (*e.g.*, a "base node") of the communications network and wireless device 1 (*e.g.*, a "peripheral device") coupled to computer device 4 (*e.g.*, the "processing device"). (*See*, *e.g.*, EX-1009, ¶¶0040-0041, 0061-0069, 0090, 0165-00167, 0176, FIGs. 8, 17-18.) Specifically, in connection with the process of Figure 18, Uchida discloses that "CPU 405 launches a wireless setting application (step S322) and reads the wireless setting information stored in the wireless device 1 via the USB

connector 401 (step S323)." (EX-1009, ¶0165.) "The CPU 405 then configures the WLAN (Wireless LAN) network by executing the wireless configuration application (step S324). (EX-1009, ¶0165.) "CPU 405 transmits the wireless setting information to the wireless device 1 via the USB connector 401, and the wireless device 1 configures the WLAN network according to this wireless setting information." (EX-1009, ¶0166.) "When the processing of step S324 is completed, CPU 405 determines whether wireless communication with the image projection device 3 is established via the wireless device 1, in other words, whether a network connection with the image projection device 3 is established (step S325)." (EX-1009, ¶0167.) Thus, Uchida discloses that image projection device 3 couples to the wireless LAN via wireless device 1.

c. Limitation 14(b): transferring media content between the processing device and the peripheral device

253. Uchida discloses and/or suggests limitation 14(b). For example, Uchida discloses transferring image data (*e.g.*, "media content") between the computer device 4 (*e.g.*, the "processing device") and wireless device 1 (*e.g.*, a "peripheral device"). (*See, e.g.*, EX-1009, ¶¶0033, 0039 ("The computer device 4 connects the USB connector 105 (see FIG. 3) described below in the wireless device 1, so that the wireless device 1 functions as a wireless unit and transmits image data to the image projection device 3 via the wireless device 1."), 0047, 0048, 0052

("[I]mage data is sent from the computer device 4 to the image projection device 3 via the wireless device 1 by executing an image transfer application on the computer device 4…."), 0081, 0156, 0167, 0176.)

d. Limitation 14(c): the media content being screen scraped data from a screen of the processing device

254. Uchida discloses and/or suggests limitation 14(c). For example, Uchida discloses display image data (*e.g.*, the "media content") being screen scraped data from a screen of computer device 4 (*e.g.*, the "processing device"). (*See*, *e.g.*, EX-1009, ¶¶0158, 0176.) Uchida explains that the image data corresponds to "the screen displayed on the LCD 403, which is the display unit of the computer device 4." (EX-1009, ¶¶0158; *see also id.*, ¶0003.) While a POSITA would have recognized from Uchida's disclosures that the content of the transmitted image data is "screen scraped data," a POSITA looking to implement an image projection system like Uchida would have considered and utilized well-known screen scraping algorithms. Indeed, the '676 patent acknowledges that screen scraping was known in the art (EX-1001, 13:59-62) and could have been predictably implemented in an image display system like that of Uchida using known techniques, for instance, as described in Slobodin, which is directed to wireless transmission of screen scraped data to a projector (*see*, *e.g.*, EX-1033, ¶¶0011-0012).

e. Limitation 14(d): transmitting the media content from the peripheral device to the communications network

255. Uchida discloses and/or suggests limitation 1(f). For example, Uchida discloses transmitting image display data (*e.g.*, the "media content") from wireless device 1 (*e.g.*, the "peripheral device") to the communications network. (*See*, *e.g.*, EX-1009, ¶¶0040-0041, 0065, 0106, 0166-0167 ("[T]he CPU 405 determines whether wireless communication with the image projection device 3 is established via the wireless device 1, in other words, whether a network connection with the image projection device 3 is established (step S325). In this process, if it is determined that a network connection with the image projection device 3 has been established (step S325: YES), the CPU 405 launches an image transfer application."), 0176 ("[W]ireless device 1 … functions as a wireless unit of a computer device 4 that transmits image data via wireless communication to an image projection device 3."), FIG. 18.)

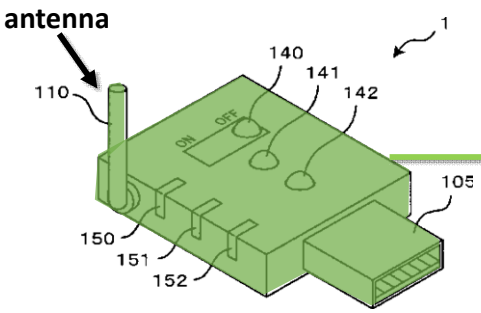

FIG. 3 (Ex. 1009)

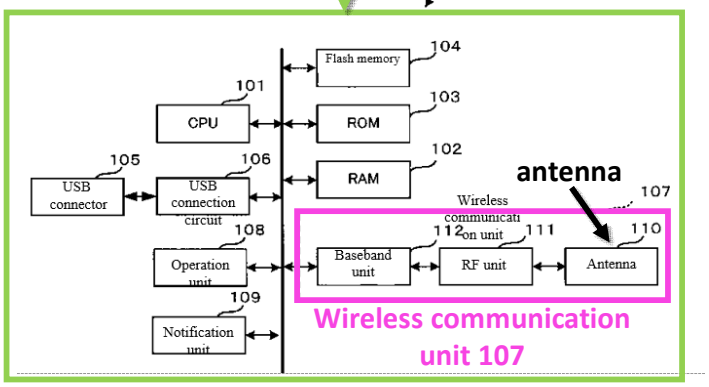

FIG. 5 (Ex. 1009)

(EX-1009, FIGs. 3, 5.)

f. Limitation 14(e): receiving media content from the communications network at the base node and displaying the media content on a display in accordance with a set of rules

256. Uchida discloses and/or suggests limitation 14(e). For example, Uchida discloses receiving display image data (*e.g.*, "media content") from the communications network at image projector 3 (*e.g.*, the "base node") and displaying the image data on a screen (*e.g.*, a "display") in accordance with a set of rules. (*See*, *e.g.*, EX-1009, ¶¶0039, 0070-0071 (describing rules for an image stop switch), 0124-0129, 0139, 0158 ("When the image projection device 3 receives the display image data transmitted in this manner, it projects an image based on the display image data

onto a screen."), 0176 ("[I]mage projection device 3 [] projects an image according to the image data received by the wireless unit 306.").)

g. Limitation 14(f): one of the rules being a forcing rule, whereby the forcing rule determines that the displaying of media content on the display is obtained by a user action on any one of the user devices involved in the meeting, without requiring the agreement of another participant, the media content from the any one of the user devices overriding or replacing any data displayed on the display by the same or another participant of the meeting

257. The combination of Uchida and Grimshaw discloses and/or suggests limitation 14(f) for reasons similar to those I explained above for limitation 1(l)-(m). (See analysis in Section IX.D.2.l-m.)

X. CONCLUSION

258. My opinions are based upon the information that I have considered to date. I am unaware of any evidence of secondary considerations with respect to the '676 patent that would render any of the asserted claims non-obvious. I reserve the right, however, to supplement my opinions in the future to respond to any arguments raised by the owner of the '676 patent and to consider new information that becomes available to me.

259. I declare that all statements made herein of my knowledge are true, and that all statements made on information and belief are believed to be true, and that these statements were made with the knowledge that willful false statements and the

like so made are punishable by fine or imprisonment, or both, under Section 1001 of Title 18 of the United States Code.

By: Kevin C. Almeroth
Kevin C. Almeroth, Ph.D.

Date: September 12, 2024