UNITED STATES PATENT AND TRADEMARK OFFICE

BEFORE THE PATENT TRIAL AND APPEAL BOARD

YEALINK (USA) NETWORK TECHNOLOGY CO., LTD., and
YEALINK NETWORK TECHNOLOGY CO., LTD.
Petitioners,

v.

BARCO N.V.
Patent Owner

U.S. Patent No. 11,403,237
IPR2024-1437

**DECLARATION OF KEVIN C. ALMEROTH, PH.D.,
IN SUPPORT OF PETITION FOR *INTER PARTES* REVIEW
OF U.S. PATENT NO. 11,403,237**

YEALINK EX. 1002

BARCO EXHIBIT 2026
Yealink v. Barco
IPR2024-01438

TABLE OF CONTENTS

I. INTRODUCTION 4

II. QUALIFICATIONS / PROFESSIONAL BACKGROUND 5

III. MATERIALS REVIEWED 18

IV. LEVEL OF ORDINARY SKILL IN THE ART 21

V. BACKGROUND OF THE TECHNOLOGY 22

VI. OVERVIEW OF THE ’237 PATENT 38

A. Prior Art Techniques Acknowledged by the ’237 Patent 38

B. The Purported Invention 41

C. Prosecution History 44

VII. CLAIM CONSTRUCTION 45

A. “coupled” (claims 1, 9, 18, 19) 48

B. “wireless” (claim 19) 48

C. “means for coupling an external peripheral device physically to a port of the processing device” (claim 9) 49

D. “means for presenting the external peripheral device” (claim 9) 49

E. “means for … display data communication and audio communication” (claim 9, 18) 49

F. “means for routing” (claim 9) 50

VIII. OVERVIEW OF THE PRIOR ART 51

A. Kaplan (Ex-1027) 51

B. Maeda (Ex-1031) 52

C. Mardiks (Ex-1026) 54

D. Deforche (Ex-1030) 57

IX. THE PRIOR ART DISCLOSES AND/OR SUGGESTS THE RECITED FEATURES OF CLAIMS 1, 3, 9, 18, and 19 OF THE ’237 PATENT 58

A. Ground I – Claims 1, 3, 9, 18, and 19 are obvious in view of Kaplan and Mardiks .. 58

1. Motivation and Rationale to Combine 58

2. Claim 1 59

3. Claim 3: The method of claim 1, further comprising presenting the external peripheral device to the processing device as any of the following: a mass storage device; and a composite device 73
4. Claim 9 74
5. Claim 18 76
6. Claim 19 78

B. Ground II – Claims 1, 3, 9, 18, and 19 are obvious in view of Maeda and Deforche 81
1. Motivation and Rationale to Combine 81
2. Claim 1 83
3. Claim 3: The method of claim 1, further comprising presenting the external peripheral device to the processing device as any of the following: a mass storage device; and a composite device 97
4. Claim 9 98
5. Claim 18 100
6. Claim 19 102

X. CONCLUSION 108

I, Kevin C. Almeroth Ph.D., declare as follows:

I. INTRODUCTION

1. I have been retained by Yealink (USA) Network Technology Co., Ltd. and Yealink Network Technology Co., Ltd. (collectively, "Petitioners") as an independent expert consultant in this proceeding before the United States Patent and Trademark Office ("PTO") regarding U.S. Patent No. 11,403,237 ("the '237 patent") (Ex-1001).

2. My name is Kevin C. Almeroth and I am a Professor Emeritus of Computer Science at the University of California, Santa Barbara. I have prepared this declaration as an expert witness on behalf of Petitioners. In this declaration, I will give my opinion as to whether claims 1, 3, 9, 18, and 19 of the '237 patent are unpatentable. I also provide herein the technical bases for these opinions, as appropriate.

3. For my efforts in connection with the preparation of this declaration, I have been compensated at my usual and customary rate for this type of consulting activity. My compensation is in no way contingent on the outcome of these or any other proceedings.

4. I have been asked to consider whether certain references disclose or suggest the features recited in claims 1, 3, 9, 18, and 19 of the '237 patent. My opinions are set forth below.

II. QUALIFICATIONS / PROFESSIONAL BACKGROUND

5. I am currently a Professor Emeritus in the Department of Computer Science at the University of California, Santa Barbara (UCSB). All of my opinions stated in this declaration are based on my own personal knowledge and professional judgment. In forming my opinions, I have relied on my knowledge and experience in designing, developing, researching, and teaching regarding computer networks and protocols, wireless networking, multicast communication, large-scale multimedia systems, and mobile applications.

6. I am over 18 years of age and, if I am called upon to do so, I would be competent to testify as to the matters set forth herein. I understand that a copy of my current curriculum vitae, which details my education and professional and academic experience, is being submitted by Petitioner as Exhibit 1003. The following provides an overview of some of my experience that is relevant to the matters set forth in this declaration.

7. While at UCSB, I have held faculty appointments and was a founding member of the Computer Engineering (CE) Program, Media Arts and Technology (MAT) Program, and the Technology Management Program (TMP). I have also served as the Associate Director of the Center for Information Technology and

Society (CITS) from 1999 to 2012. I have been a faculty member at UCSB since July 1997.

8. I hold three degrees from the Georgia Institute of Technology: (1) a Bachelor of Science degree in Information and Computer Science (with minors in Economics, Technical Communication, and American Literature) earned in June 1992; (2) a Master of Science degree in Computer Science (with specialization in Networking and Systems) earned in June 1994; and (3) a Doctor of Philosophy (Ph.D.) degree in Computer Science (Dissertation Title: Networking and System Support for the Efficient, Scalable Delivery of Services in Interactive Multimedia System, minor in Telecommunications Public Policy) earned in June 1997. During my education, I took a wide variety of courses as demonstrated by my minors. My undergraduate degree also included a number of courses more typical of a degree in electrical engineering including digital logic, signal processing, and telecommunications theory.

9. One of the major concentrations of my research over the past 30+ years has been the delivery of multimedia content and data between computing devices, including through various network architectures. In my research, I have studied large-scale content delivery systems, and the use of servers located in a variety of geographic locations to provide scalable delivery to hundreds or thousands of users

simultaneously. I have also studied smaller-scale content delivery systems in which content is exchanged between individual computers and portable devices. My work has emphasized the exchange of content more efficiently across computer networks, including the scalable delivery of content to many users, mobile computing, satellite networking, delivering content to mobile devices, and network support for data delivery in wireless networks.

10. In 1992, the initial focus of my research was on the provision of interactive functions (e.g., VCR-style functions like pause, rewind, and fast-forward) for near video-on-demand systems in cable systems; in particular, how to aggregate requests for movies at a cable head-end and then how to satisfy a multitude of requests using one audio/video stream broadcast to multiple receivers simultaneously. This research has continually evolved and resulted in the development of techniques to scale the delivery of on-demand content, including audio, video, web documents, and other types of data, through the Internet and over other types of networks, including over cable systems, broadband telephone lines, and satellite links.

11. An important component of my research has been investigating the challenges of communicating multimedia content, including video, between computers and across networks including the Internet. Although the early Internet

was used mostly for text-based, non-real time applications, the interest in sharing multimedia content, such as video, quickly developed. Multimedia-based applications ranged from downloading content to a device to streaming multimedia content to be instantly used. One of the challenges was that multimedia content is typically larger than text-only content, but there are also opportunities to use different delivery techniques since multimedia content is more resilient to errors. I have worked on a variety of research problems and used a number of systems that were developed to deliver multimedia content to users. One content-delivery method I have researched is the one-to-many communication facility called "multicast," first deployed as the Multicast Backbone, a virtual overlay network supporting one-to-many communication. Multicasting is one technique that can be used on the Internet to provide streaming media support for complex applications like video-on-demand, distance learning, distributed collaboration, distributed games, and large-scale wireless communication. The delivery of media through multicasting often involves using Internet infrastructure, devices and protocols, including protocols for routing and TCP/IP.

12. Starting in 1997, I worked on a project to integrate the streaming media capabilities of the Internet together with the interactivity of the web. I developed a project called the Interactive Multimedia Jukebox (IMJ). Users would visit a web

page and select content to view. The content would then be scheduled on one of a number of channels, including delivery to students in Georgia Tech dorms delivered via the campus cable plant. The content of each channel was delivered using multicast communication.

13. In the IMJ, the number of channels varied depending on the capabilities of the server including the available bandwidth of its connection to the Internet. If one of the channels was idle, the requesting user would be able to watch their selection immediately. If all channels were streaming previously selected content, the user's selection would be queued on the channel with the shortest wait time. In the meantime, the user would see what content was currently playing on other channels, and because of the use of multicast, would be able to join one of the existing channels and watch the content at the point it was currently being transmitted.

14. The IMJ service combined the interactivity of the web with the streaming capabilities of the Internet to create a jukebox-like service. It supported true Video-on-Demand when capacity allowed, but scaled to any number of users based on queuing requested programs. As part of the project, we obtained permission from Turner Broadcasting to transmit cartoons and other short-subject content. We also connected the IMJ into the Georgia Tech campus cable television

network so that students in their dorms could use the web to request content and then view that content on one of the campus's public access channels.

15. More recently, I have also studied issues concerning how users choose content, especially when considering the price of that content. My research has examined how dynamic content pricing can be used to control system load. By raising prices when systems start to become overloaded (*i.e.*, when all available resources are fully utilized) and reducing prices when system capacity is readily available, users' capacity to pay as well as their willingness can be used as factors in stabilizing the response time of a system. This capability is particularly useful in systems where content is downloaded or streamed on-demand to users.

16. As a parallel research theme, starting in 1997, I began researching issues related to wireless devices and sensors. In particular, I was interested in showing how to provide greater communication capability to "lightweight devices," *i.e.*, small form-factor, resource-constrained (*e.g.*, CPU, memory, networking, and power) devices. Starting in 1998, I published several papers on my work to develop a flexible, lightweight, battery-aware network protocol stack. The lightweight protocols we envisioned were similar in nature to protocols like Bluetooth, Universal Plug and Play (UPnP) and Digital Living Network Alliance (DLNA).

17. From this initial work, I have made wireless networking—including ad hoc, mesh networks and wireless devices—one of the major themes of my research. My work in wireless networks spans the protocol stack from applications through to the encoding and exchange of data at the data link and physical layers.

18. At the application layer, even before the large-scale "app stores" were available, my research looked at building, installing, and using apps for a variety of purposes, from network monitoring to support for traditional computer-based applications (*e.g.*, content retrieval) to new applications enabled by ubiquitous, mobile devices. For example, my research has looked at developing applications for virtually exchanging and tracking "coupons" through "opportunistic contact" among mobile wireless devices (*i.e.*, communication among devices moving into communication range with each other). In many of the courses I have taught there is a project component. Through these projects I have supervised numerous efforts to develop new "apps" for download and use across a variety of mobile platforms.

19. Toward the middle of the protocol stack, my research has also looked to build wireless infrastructure support to enable communication among a set of mobile devices unaided by any other kind of network infrastructure. These kinds of networks are useful either in challenged network environments (e.g., when a natural disaster has destroyed existing infrastructure) or when suitable support for network

communication never existed. The deployment of such networks (or even the use of traditional network support) are critical to support services like disaster relief, catastrophic event coordination, and emergency services deployment.

20. Yet another theme of my research has been monitoring wireless networks, in particular different variants of IEEE 802.11 compliant networks, to (1) understand the operation of the various protocols used in real-world deployments, (2) use these measurements to characterize use of the networks and identify protocol limitations and weaknesses, and (3) propose and evaluate solutions to these problems. I have successfully used monitoring techniques to study wireless data link layer protocol operation and to improve performance by enhancing the operation of such protocols. For wireless protocols, this research includes functions like network acquisition and channel bonding.

21. One theme in my wireless network research has been cross-layer solutions and innovations. As mentioned above, with greater wireless device use and network support, we envisioned new application paradigms and services, for example, when mobile devices come into contact with each other. Instead of relying on existing infrastructure to relay communication, mobile devices are able to discover each other and communicate directly. Other examples include discovering and using location information to enhance users' experiences. Network support and

novel applications span the use of a variety of network architectures supporting users on foot, in vehicles, and across varying terrains and environments. Finally, we studied how communication efficiency can be supported through intelligent handoffs as well as location and movement prediction.

22. Protecting networks, including their operation and content, has been an underlying theme of my research almost since the beginning of my research career. Since 2000, I have been involved in several projects that specifically address security, network protection, and firewalls. After significant background work, a team on which I was a member successfully submitted a $4.3M grant proposal to the Army Research Office (ARO) at the Department of Defense to propose and develop a high-speed intrusion detection system. Key aspects of the system included associating streams of packets and analyzing them for viruses and other malware. Once the grant was awarded, we spent several years developing and meeting the milestones of the project. Several of my students worked on related projects and published papers on topics ranging from intrusion detection to developing advanced techniques to be incorporated into firewalls. I have also used firewalls, including their associated malware detection features, in developing techniques for the classroom to ensure that students are not distracted by online content.

23. My recent work ties some of the various threads of my past research together. I have investigated content delivery in online social networks and proposed reputation management systems in large-scale social networks and marketplaces. On the content delivery side, I have looked at issues of caching and cache placement, especially when content is shared and the cache has geographical relevance. We were able to show that effective caching strategies can greatly improve performance and reduce deployment costs.

24. As an important component of my research program, I have been involved in the development of academic research into available technology in the marketplace. One aspect of this work is my involvement in the Internet Engineering Task Force (IETF). The IETF is a large and open international community of network designers, operators, vendors, and researchers concerned with the evolution of Internet architecture and the smooth operation of the Internet. I have been involved in various IETF groups including content delivery-related working groups like the Audio Video Transport (AVT) group, the MBone Deployment (MBONED) group, Source Specific Multicast (SSM) group, the Inter-Domain Multicast Routing (IDMR) group, the Reliable Multicast Transport (RMT) group, the Protocol Independent Multicast (PIM) group, etc. I have also served as a member of the Multicast Directorate (MADDOGS), which oversaw the standardization of all things

related to multicast in the IETF. Finally, I was the Chair of the Internet2 Multicast Working Group for seven years.

25. My involvement in the research community extends to leadership positions for several academic journals and conferences. I am the co-chair of the Steering Committee for the ACM Network and System Support for Digital Audio and Video (NOSSDAV) workshop and on the Steering Committees for the International Conference on Network Protocols (ICNP), ACM Sigcomm Workshop on Challenged Networks (CHANTS), and IEEE Global Internet (GI) Symposium. I have served or am serving on the Editorial Boards of IEEE/ACM Transactions on Networking, IEEE Transactions on Mobile Computing, IEEE Network, ACM Computers in Entertainment, AACE Journal of Interactive Learning Research (JILR), and ACM Computer Communications Review. I have co-chaired a number of conferences and workshops including the IEEE International Conference on Network Protocols (ICNP), IEEE Conference on Sensor, Mesh and Ad Hoc Communications and Networks (SECON), International Conference on Communication Systems and Networks (COMSNETS), IFIP/IEEE International Conference on Management of Multimedia Networks and Services (MMNS), the International Workshop On Wireless Network Measurement (WiNMee), ACM Sigcomm Workshop on Challenged Networks (CHANTS), the Network Group

Communication (NGC) workshop, and the Global Internet Symposium, and I have served on the program committees for numerous conferences.

26. Furthermore, in the courses I taught at UCSB, a significant portion of my curriculum covered aspects of the Internet and network communication including the physical and data link layers of the Open System Interconnect (OSI) protocol stack, and standardized protocols for communicating across a variety of physical media such as cable systems, telephone lines, wireless, and high-speed Local Area Networks (LANs). The courses I have taught also cover most major topics in Internet communication, including data communication, multimedia encoding, and mobile application design. My research and courses have covered a range of physical infrastructures for delivering content over networks, including cable, Integrated Services Digital Network (ISDN), Ethernet, Asynchronous Transfer Mode (ATM), fiber, and Digital Subscriber Line (DSL). For a complete list of courses I have taught, see my curriculum vitae (CV) (Ex-1003).

27. In addition, I co-founded a technology company called Santa Barbara Labs that was working under a sub-contract from the U.S. Air Force to develop very accurate emulation systems for the military's next generation internetwork. Santa Barbara Labs' focus was in developing an emulation platform to test the performance characteristics of the network architecture in the variety of

environments in which it was expected to operate, and, in particular, for network services including IPv6, multicast, Quality of Service (QoS), satellite-based communication, and security. Applications for this emulation program included communication of a variety of multimedia-based services, including video conferencing and video-on-demand.

28. In addition to having co-founded a technology company myself, I have worked for, consulted with, and collaborated with companies for nearly 30 years. These companies range from well-established companies to start-ups and include IBM, Hitachi Telecom, Turner Broadcasting System (TBS), Bell South, Digital Fountain, RealNetworks, Intel Research, Cisco Systems, and Lockheed Martin.

29. Through my graduate education, leadership with CITS, involvement in TMP, role in the development of the Internet2 infrastructure, and consulting with ISPs, I have gained a strong understanding in the role of the Internet in our society and the challenges of deploying large-scale production networking infrastructure. CITS, since its inception, has looked at the role of the Internet in society, including how the evolution of technology has created communication opportunities and challenges, including, for example through disruptive technologies like P2P. TMP looks to focus on non-purely technical issues, including, for example, state-of-the-art business methods, strategies for successful technology commercialization, new

venture creation, and best practices for fostering innovation. Through my industry collaborations and Internet2 work, I have developed significant experience in the challenges of deploying, monitoring, managing, and scaling communication infrastructure to support evolving Internet services like streaming media, conferencing, content exchange, social networking, and e-commerce.

30. I am a Member of the Association of Computing Machinery (ACM) and a Fellow of the Institute of Electrical and Electronics Engineers (IEEE).

III. MATERIALS REVIEWED

31. The opinions contained in this Declaration are based on the documents I reviewed, my professional judgment, as well as my education, experience, and knowledge regarding, for example, electronic meeting tools, methods of displaying and transmitting audiovisual media content, audiovisual display systems, wireless network communication, user interfaces, plug-and-play architectures, and video conferencing applications.

32. In forming my opinions expressed in this Declaration, I reviewed the following materials and information:

EXHIBIT	DESCRIPTION
Ex-1001	U.S. Patent No. 11,403,237
Ex-1003	Curriculum Vitae of Kevin C. Almeroth, Ph.D.

Ex-1004	File History of U.S. Patent No. 11,403,237
Ex-1005	U.S. Patent Application Publication No. 2005/0210390 ("Ono")
Ex-1006	U.S. Patent Application Publication No. 2008/0074560 ("Ichieda")
Ex-1007	U.S. Patent Application Publication No. 2006/0069840 ("Corbett")
Ex-1008	RESERVED
Ex-1009	English Translation of Japanese Patent Application Publication No. 2008-165007 ("Uchida")
Ex-1010	Japanese Patent Application Publication No. 2008-165007
Ex-1011	Certification for English Translation of Japanese Patent Application Publication No. 2008-165007
Ex-1012-1019	RESERVED
Ex-1020	U.S. Patent Application Publication No. 2010/0087139 ("Glass")
Ex-1021	U.S. Patent Application Publication No. 2009/0198839 ("Banerjee")
Ex-1022	U.S. Patent Application Publication No. 2011/0115689 ("Sugiyama")
Ex-1023	U.S. Patent Application Publication No. 2009/0187687 ("Hulbert")
Ex-1024	U.S. Patent Application Publication No. 2003/0112975 ("Taiwanese")
Ex-1025	RESERVED
Ex-1026	U.S. Patent Application Publication No. 2009/0172219 ("Mardiks")
Ex-1027	U.S. Patent Application Publication No. 2010/0295994 ("Kaplan")
Ex-1028-1029	RESERVED

Ex-1030	EP Patent Application Publication No. 2107463 ("Deforche")
Ex-1031	English Translation of Japanese Patent Application Publication No. 2007-208606 ("Maeda")
Ex-1032	RESERVED
Ex-1033	U.S. Patent Application Publication No. 2002/0196378 ("Slobodin")
Ex-1034	U.S. Patent Application Publication No. 2002/0174254 ("Kita")
Ex-1035-1049	RESERVED
Ex-1050	Imation
Ex-1051	EZAir
Ex-1052	Warpia
Ex-1053	Q-Waves
Ex-1054	IOGear
Ex-1055	JP Patent Application Publication No. 2007-208606
Ex-1056	Certification for English Translation of JP Patent Application Publication No. 2007-208606
Ex-1057	RESERVED
Ex-1058	U.S. Patent Application Publication No. 2011/0038005 ("Ochai")
Ex-1059	U.S. Patent Application Publication No. 2006/0229100 ("Born")
Ex-1060	U.S. Patent No. 7,207,059 ("Kurian")

33. I also reviewed any other materials I refer to in this Declaration in support of my opinions.

34. My opinions contained in this declaration are based on the documents I reviewed and my knowledge and professional judgment. My opinions have also been guided by my appreciation of how a person of ordinary skill in the art ("POSITA") would have understood the state of the art, the teachings of the prior art, and the claim terms and the specification of the '237 patent at the time of the alleged invention. My opinions reflect how a POSITA (which I have described below) would have understood the '237 patent, the prior art, the knowledge of a POSITA and the state of the art at the time of the alleged invention. I have been asked to initially consider that the time of the alleged invention of the '237 patent is around September 14, 2011 (the earliest date to which the '237 patent claims the benefit of priority). However, even if a modestly earlier or later date were selected it would not alter my opinions.

35. Based on my experience and expertise, it is my opinion that the prior art discloses and/or suggests all the features recited in challenged claims 1, 3, 9, 18, and 19 of the '237 patent, as I discuss in detail below.

IV. LEVEL OF ORDINARY SKILL IN THE ART

36. In determining the skills of a hypothetical POSITA of the '237 patent at the time of the claimed invention, I considered several things, including various prior art techniques for screen scraping, wireless transmission of media content,

wireless networking, user input/control, peripheral device interfaces, and device drivers. I also considered the type of problems that such techniques gave rise to and the rapidity with which innovations were made. I also considered the sophistication of the technologies involved and the educational background and experience of those actively working in the field.

37. For the purposes of my analysis, I have been asked to assume that a POSITA in the field of art of the ’237 patent would have had at least a Master’s Degree in Electrical Engineering with at least five years of work experience in computer science and embedded systems, or a Master’s Degree in Computer Science with at least five years of work experience in electrical and computer engineering and embedded systems. Additional educational experience could substitute for some of the work experience. My opinions below have taken that into account and reflect that level of skill in determining the content of the prior art and what it would have suggested to a POSITA.

V. BACKGROUND OF THE TECHNOLOGY

38. At the time of the alleged invention, media sharing between electronic devices was well established and used in an increasing variety of applications to share media data between devices. In the decades before the alleged invention, a wide array of electronic tools were developed to facilitate meetings and share content

among individuals, particularly in business and educational settings. As acknowledged by the ’237 patent, there has been “an explosion” of such tools by the time of the alleged invention. (Ex-1001, 1:28-36.) By the 2000s, there was already “widespread acceptance of using computers to facilitate group communications.” (Ex-1033, ¶4.)

39. The oldest solutions involved wired connections between electronic devices. As wireless networking techniques became more common, wireless applications to electronic tools became prevalent. Indeed, by the time of the alleged invention in 2011, acknowledged by the ’237 patent and discussed in more detail below, wireless networks were commonplace and widespread from classrooms to boardrooms.

40. Wireless media sharing arose, in part, from the recognition that sharing media content from one device to one or more separate devices (in settings such as a meeting, presentation, *etc*.) using physical cable connections presented certain physical limitations. For example, one limitation with physical cable connections was the case in which multiple presenters wish to perform presentations while taking

turns using respective personal computers (PCs). (Ex-1006, ¶4; *see also* Ex-1031[1], ¶3 (recognizing the limitation of physical cable connections in meetings requires physically reconnecting each electronic device to share media on separate electronic devices)). By designing systems utilizing wireless communication, between a media device (*i.e.*, computer) and a display device (*i.e.*, a second computer, projector, or similar device), "the cable can be prevented from becoming an obstacle." (*Id.*)

41. Techniques developed for wirelessly sharing media content included sharing content displayed on a laptop computer or other portable electronic device with another, separate display, for example, in a conference room. Although early on bandwidth of the wireless systems was a potential issue, to address this problem, US Patent Application Publication No. 2002/0196378 ("Slobodin") proposed a method and apparatus for wireless transmission of "screen scraped" images to a projector to reduce the amount of transmission bandwidth. (Ex-1033, Title, Abstract, ¶¶12-14.) As shown in FIG. 1 of Slobodin (reproduced below), an image-generating device 110 (*e.g.*, a laptop computer) generates a digital image on a display

[1] This is the English Translation (Ex-1031) to JP Patent Application Publication No. 2008-165007 (Ex-1055). All citations are to the English Translation (Ex-1031). Ex-1056 is the corresponding certificate of certified translation.

device 111 that is transmitted over a wireless link 120 to a remote presentation projector 130 for projection 145 by a presenter 150. (Ex-1033, ¶33.) Screen scraping was used to capture display data that was then transmitted to the projector. (Ex-1033, ¶¶12-14.) The '237 patent borrows this same screen scraping technique from Slobodin. (*See* Ex-1001, 14:16-20.)

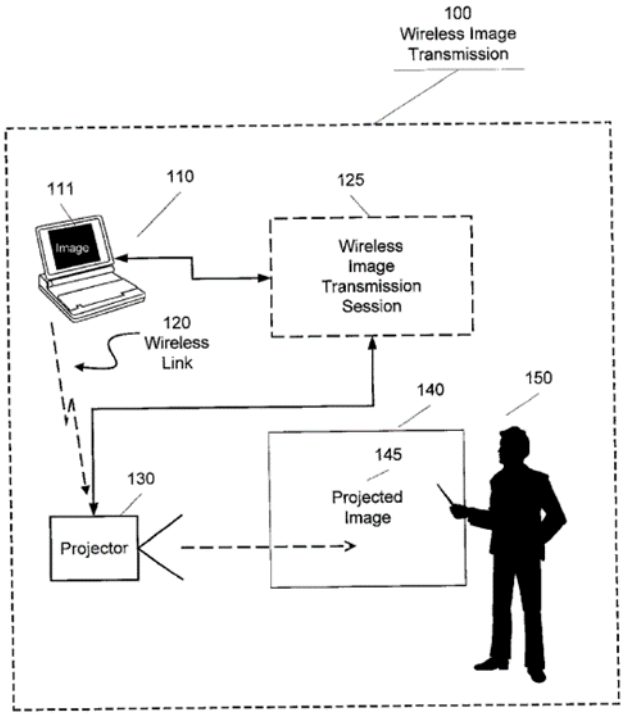

(Ex-1033, FIG. 1.)

42. As wireless networking technology progressed, focus shifted to making the tools more user-friendly and pluralistic. For example, efforts focused on making it easier for multiple users to establish network connections to implement wireless communication for image sharing. (*See, e.g.*, Ex-1034, ¶¶1-8.) U.S. Patent

Application Publication No. 2002/0174254 ("Kita") (Ex-1034) describes a system in which network interface cards were preconfigured to connect to a wireless LAN, such that multiple computers 11 could be wirelessly connected to a projector 16 by merely inserting one of these interface cards 11 without participants needing to configure a network connection. (*See*, *e.g.*, Ex-1034, ¶¶14-17, FIGS. 3 and 18, reproduced below.)

FIG. 3

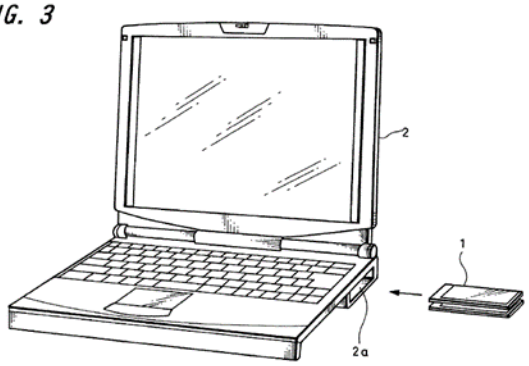

FIG. 18

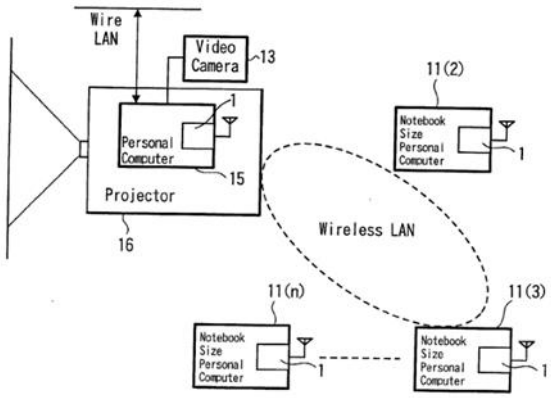

(Ex-1034, FIGs. 3, 18.)

43. During the 2000s, wireless technology shifted from wireless LAN cards, as described by Kita, to the increasingly more ubiquitous Universal Bus Standard (USB) standard. A range of plug-and-play USB-type devices emerged for sharing both image and audio. For example, U.S. Patent Application Publication No. 2005/0210390 ("Ono") proposed the use of USB-type "communication modules" to wirelessly connect an image projector with multiple "information terminal apparatuses," depicted below as laptop personal computers. (Ex-1005,

¶¶36-39.) The communications modules plug into a USB port of the information terminal apparatuses and wirelessly transmit images via a wireless network from the laptop display to a corresponding wireless connection module coupled to the image projector. (Ex-1005, ¶¶36-39, 54.) Further, it was already taught in the prior art to use pre-installed drivers to operate a standard class of USB computer peripheral devices such as human interface devices (HID). (*See* Ex-1030, ¶10; *see additionally*, Ex-1026, ¶3). In fact, "HID and MSD [mass storage device] drivers [were] known per se in the art." (Ex-1030, ¶10).

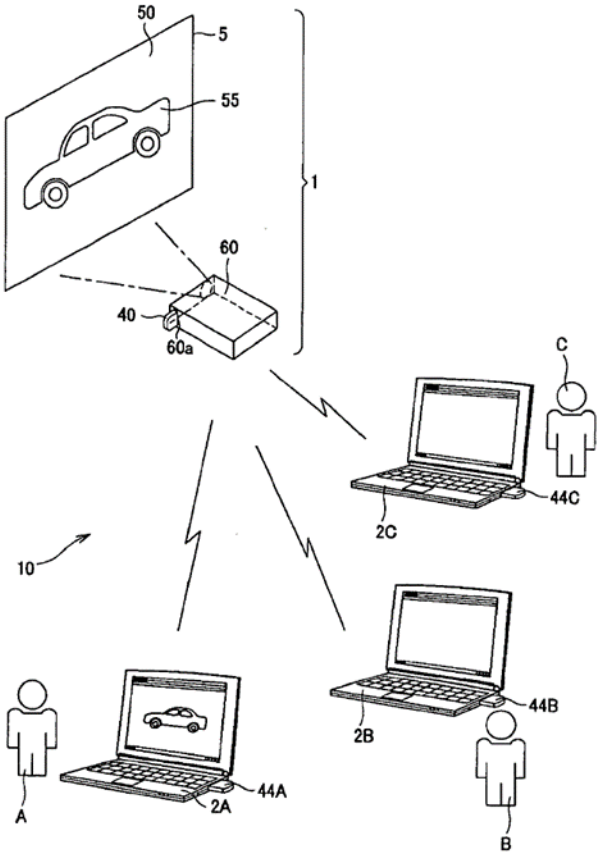

(Ex-1005, FIG. 1.)

44. Around the same timeframe, Japanese Patent Application Publication No. 2008-165007 ("Uchida") (Ex-1009[2]) described a similar image projection system. Uchida describes a personal computer device 4 wirelessly connected to an image projection device 3 (*e.g.*, a projector) via a wireless device 1. (*See*, *e.g.*, Ex-1009, ¶39 and FIG. 1, reproduced below.) The wireless device 1 is described as a USB dongle. (Ex-1009, ¶39.) The wireless device 1 is connected to the computer 4 and transmitted image data from the computer 4 to the image projection device 3 for display. Wireless setting information is automatically provided without requiring a user to enter this information—thereby making it more convenient for the user to make use of the tool. (Ex-1009, ¶¶41-44.)

[2] This is the English Translation (Ex-1009) to JP Patent Application Publication No. 2008-165007 (Ex-1010). All citations are to the English Translation (Ex-1009). Ex-1011 is the corresponding certificate of certified translation.

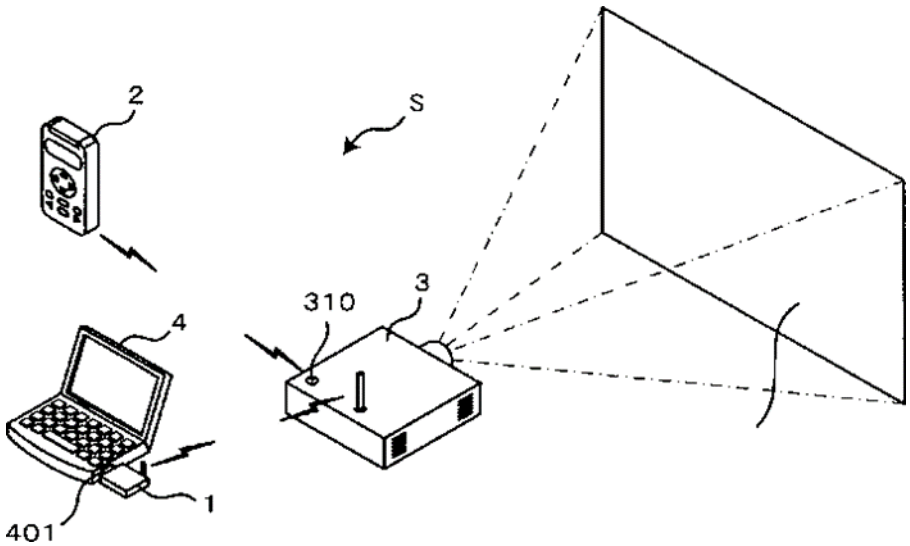

(Ex-1009, FIG. 1.)

45. Likewise, Japanese Patent Application Publication No. 2007-208606 ("Maeda") disclosed using a PC as an image generation device to generate images and audio, to be transmitted to a projector using a wireless local area network (LAN). (Ex-1031, ¶15.) In operation, the "screen displayed on the display of PC 100 is transmitted from PC 100 to projector 200 and the screen received by projector 200 is projected onto a screen 30. A wireless LAN card 10 containing a wireless LAN chip is attached to PC 100, thereby transmitting image signals and audio signals to projector 200 via the wireless LAN." (Ex-1031, ¶17.) I discuss Maeda in greater detail below.

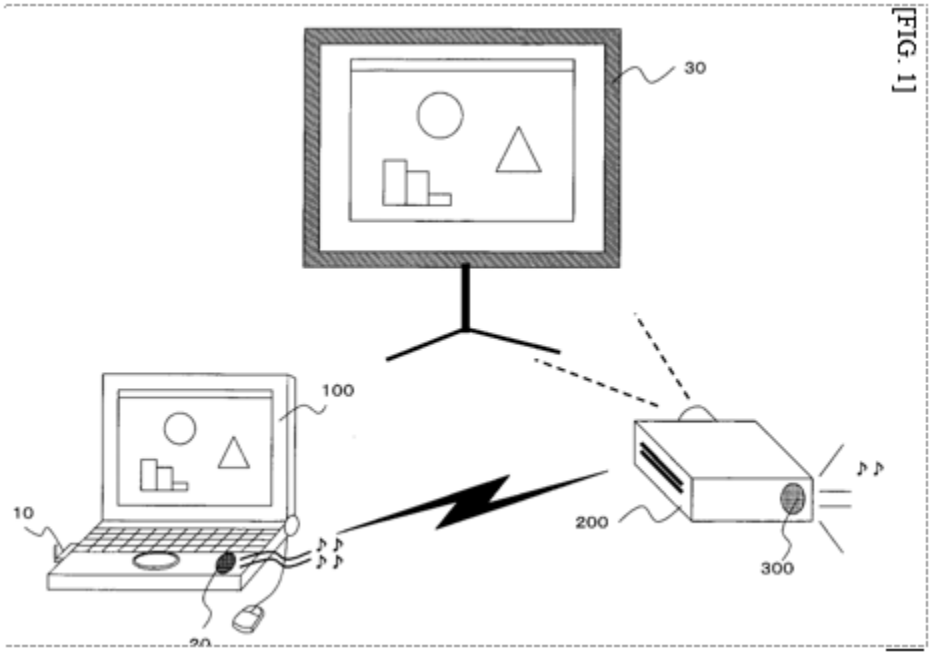

(Ex-1031, FIG. 1)

46. Near the end of the 2000s, the availability of greater wireless bandwidth led to greater amounts of media content being streamed wirelessly to different devices. For example, U.S. Patent Application Publication No. 2010/0295994 ("Kaplan") (Ex-1027) describes a communications system in which a computer 220 is wirelessly connected to a display device 210 via a USB transmitter 120. (*See*, *e.g.*, Ex-1027, ¶¶16-18 and FIG. 2, reproduced below.) The transmitter is pre-paired with a receiver 110 connected to the display device 210, such that a user does not need to configure the wireless connection. (*See* Ex-1027, ¶18.) I discuss Kaplan in greater detail below.

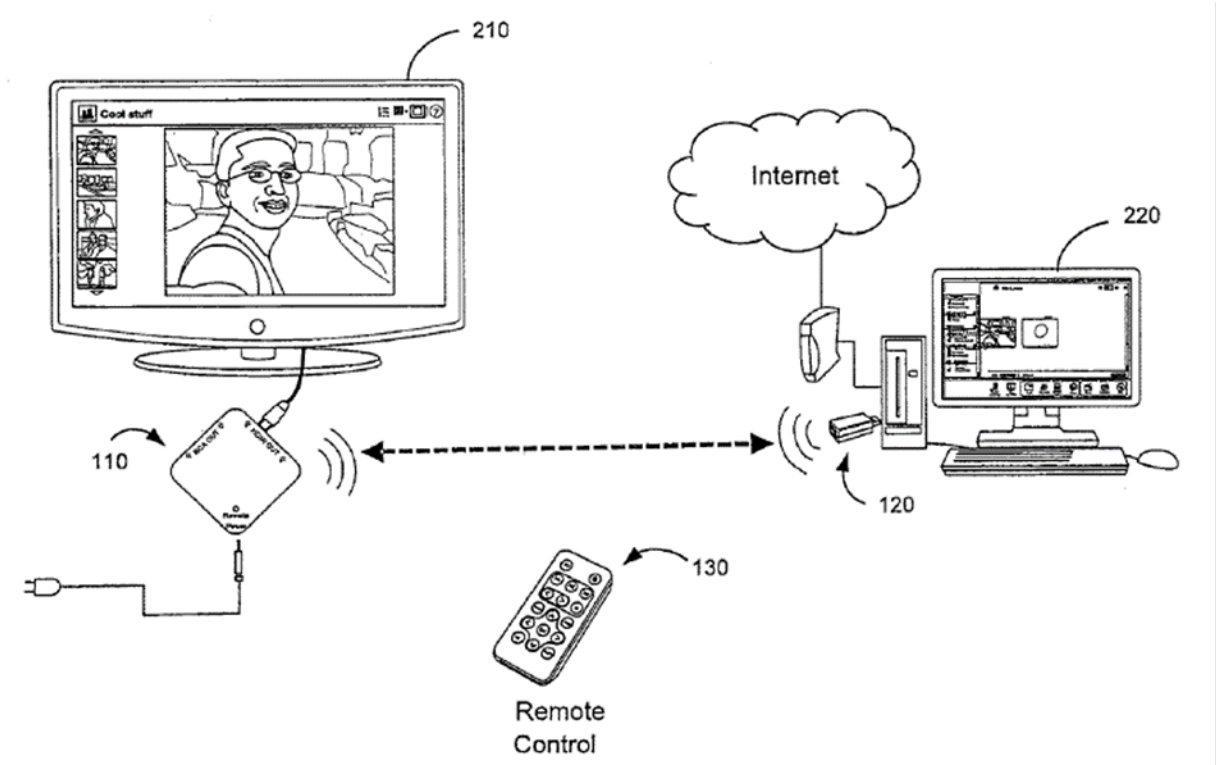

(Ex-1027, FIG. 1.)

47. Around the same time, several commercial products were available that employed similar USB dongles for wireless communication between a personal computer and a projector or other display. One example was sold by Imation from at least during 2008 (Ex-1050 (Imation), p. 8.) The Imation system included a USB transmitter dongle that plugged into a personal computer and allowed communication with a base unit that was connected to a projector or monitor. (*See* image below reproduced from Ex-1050 (Imation), p. 2.) Imation's system adaptable for use at a conference or meeting with multiple wireless adapters able to communicate with the same projector/monitor (Ex-1050(Imation), p. 6 "Associate a New Dongle to the WPL Base Unit".)

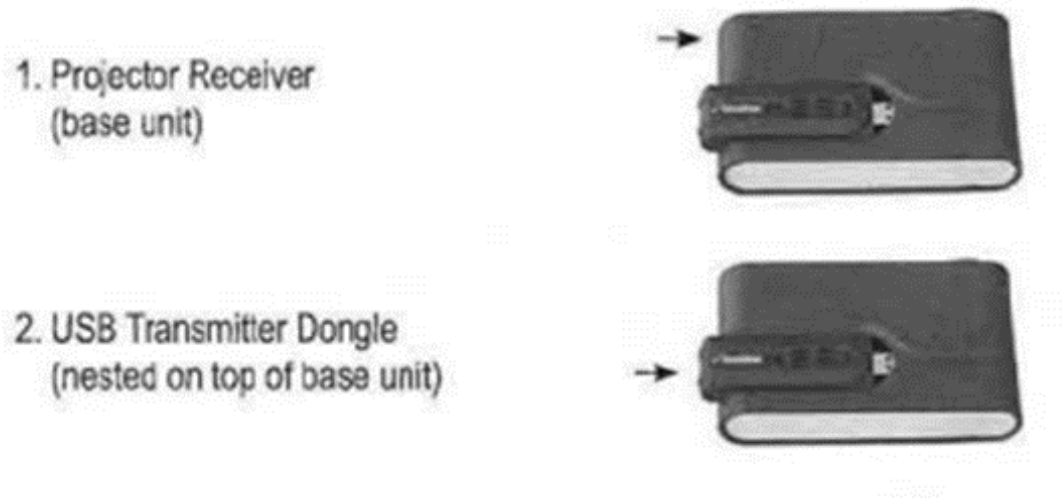

(Ex-1050, p. 6 (excerpted).)

48. The Imation system had a simple startup that only required attaching the base unit to the projector/display and to power and inserting the USB transmitter dongle into the personal computer. After only about 20 seconds, a start screen appeared that allowed transferring an image from the computer to be displayed on the projector/monitor. (*See* image reproduced below from Ex-1050 (Imation), p. 2 "Simple Start UP (PC)".) Although an optional special driver was available, this driver was not necessary for operation (Ex-1050(Imation), "Installing DisplayLink™ Driver (PC)".)

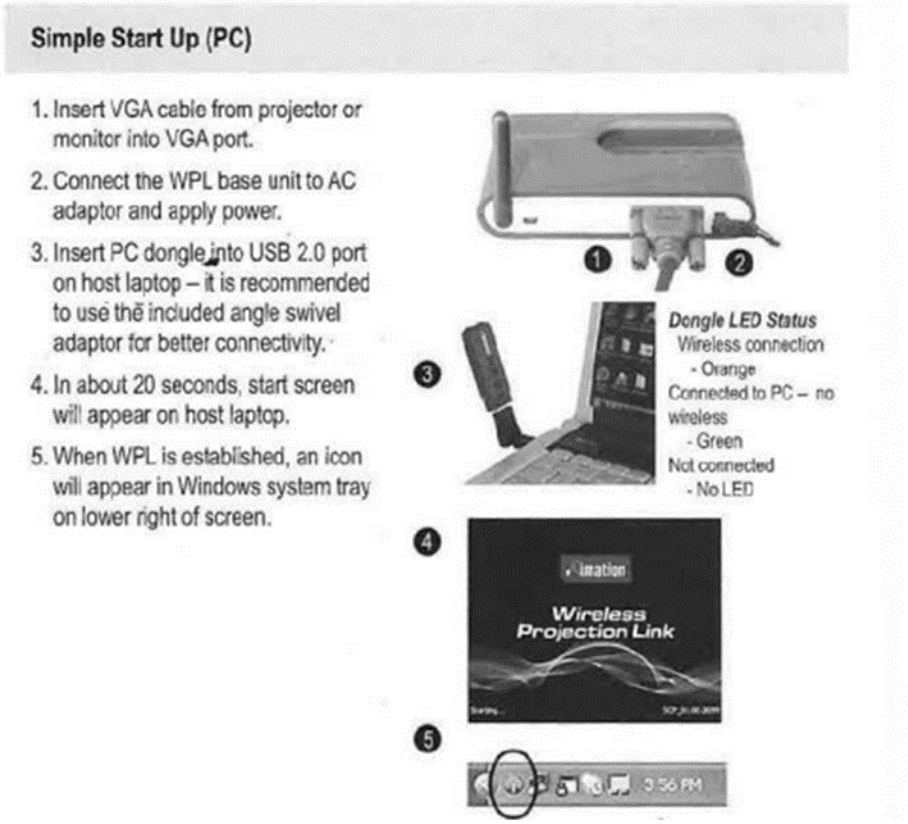

(Ex-1050, p. 2 (excerpted).)

49. As example of another system employing this technology at the time of invention, another wireless adapter system was sold under the EZAir brand from around 2010 (Ex-1051 (EZAir), p. 1.) According to promotional materials for the EZAir, "[t]he products operate via a Plug&Play USB dongle that plugs into a USB port available in any PC/Laptop and an adapter that connects to the target device (such as flat TV, speaker system or PC peripherals)." (Ex-1051 (EZAir), p. 2.) The adapter was also marketed for use in small business and education where multiple participants commonly need to interact with the same projector/display (Ex-1051 (EZAir), p 2.) An image from the EZAir marketing material (Ex-1051 (EZAir))

illustrates the Plug&Play USB dongle transmitting image and audio data wirelessly to the adapter connected to a television. The image of an undersea scene from the laptop connected to the dongle is reproduced on the television.

(Ex-1051, p. 1 (excerpted).)

50. Wireless adapters with a similar form factor were also sold under the Warpia (Ex-1052 (Warpia) and Q-Waves (Ex-1053 (Q-Waves)) brands. According to marketing materials from 2009, the Warpia system allowed wireless connectivity from a notebook or PC to displays, such as projectors, TVs, and monitors (Ex-1052 (Warpia), p. 1, "Key Features," "Overview".) The Warpia system included pre-associated (*i.e.*, pre-paired) adapters that provided audio and video communication to the display (Ex-1052 (Warpia), p. 1, "Key Features".) The system was easy and quick to set up. (Ex-1052 (Warpia), p. 1, "Key Features".) An image from the Warpia marketing material (Ex-1052 (Warpia)) is shown below, illustrating image

transfer from a PC Adapter connected to a laptop computer to A/V Adapters connected to a projector and a television. The PC Adapter was able to connect to a USB port, which were common to all notebooks & PCs at the time, and the A/V Adapter connected to an HDMI port or VGA port of a display device. (Ex-1052 (Warpia), p.1 "Overview".)

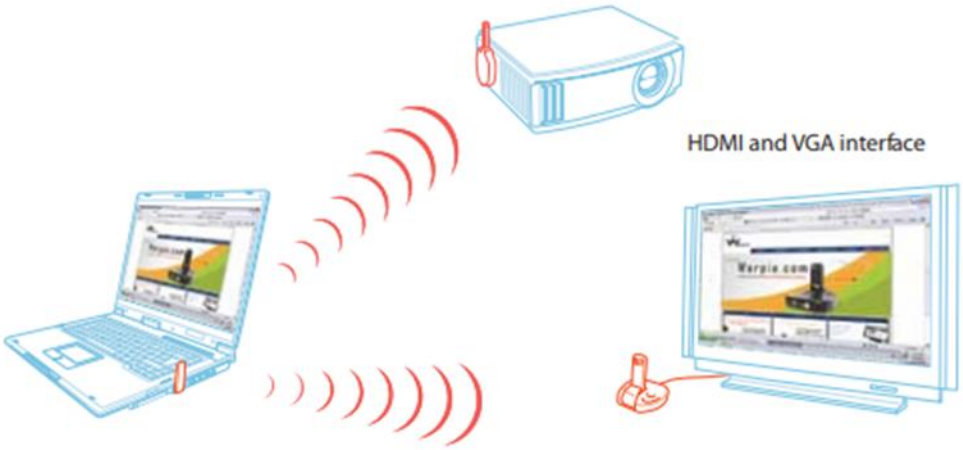

(Ex-1052, p. 1 (excerpted).)

51. As yet another system implementing a wireless adapter, IOGEAR sold another wireless media communication kit from at least 2008 (Ex-1054 (IOGEAR), p.44 (copyright date).) The kit included a wireless USB host adapter that plugged into a computer from which media was transmitted wirelessly to a wireless VGA adapter connected to a projector or other display. (*See* images below reproduced from Ex-1054 (IOGEAR), pp.13,16.)

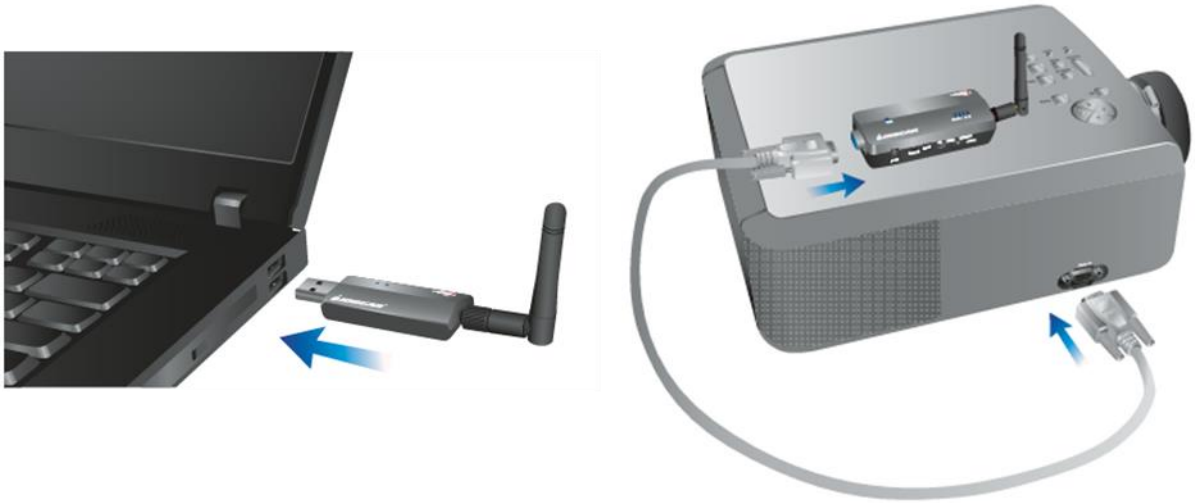

(Ex-1054, pp.13 (left – wireless host adapter), 16 (right – wireless VGA adapter) (excerpted).)

52. The IOGEAR product anticipated that the host computer operating system would have included pre-installed USB drivers that allowed the USB host adapter to be set up automatically. For instance, IOGEAR indicated that one can "[p]lug the Wireless USB Host Adapter to your computer via option 1 or 2. Windows will detect the device and complete the driver installation process automatically." (Ex-1054 (IOGEAR), p. 13.) The wireless USB host adapter and wireless VGA adapter were pre-associated (or pre-paired) to improve ease of use, such that no network configuration needs to be entered by a user. (Ex-1054 (IOGEAR), p. 40.) The IOGEAR kit was also adaptable for use by multiple participants in a meeting. For example, additional wireless USB host adapters could be paired with the same wireless VGA adapter (Ex-1054, p. 28.) A "HOST" button on the wireless VGA

adapter could then be used to switch between which wireless USB host adapter was transferring data to the VGA adapter for display. (*See* Ex-1054 (IOGEAR), p. 28, "Wireless USB Host Adapter Selection" reproduced below.)

Wireless USB Host Adapter Selection

To use this button, you must purchase at least one additional Wireless USB Host Adapter (GUWA200). The additional Wireless USB Host Adapters not included in this kit will have to go through the association process before they can be used with the Wireless VGA Adapter. For more information about the association process, please refer to Appendix - Cable association with other devices .

The "HOST" button on the Wireless VGA Adapter is used to switch between Wireless USB Host Adapters. By pressing this button, the Wireless VGA Adapter will look for the next associated Wireless USB Host Adapter in its list and connect to it. The 1-2-3 lights will move to the next position. If multiple Wireless USB Host Adapters have been associated with the Wireless VGA Adapter, you may have to press the button multiple times before a connection is made with the desired Wireless USB Host Adapter. Up to 16 Wireless USB Host Adapters can be associated with your Wireless VGA Adapter.

(Ex-1054, p. 28 (excerpted).)

53. It is apparent from the example prior art patent and product literature discussed above that content sharing techniques were well-established by the time of the invention. I have discussed several examples of techniques to transfer image data from a computer to a display routed through a wireless USB dongle or similar set of devices, so that data from the computer display can be presented on another display. The USB technology of these various products utilized standardized USB drivers and communication protocols available to allow a plug-and-play experience. (*See*, *e.g.*, Ex-1050 (Imation), p. 2 "Simple Start Up (PC)".).

VI. OVERVIEW OF THE ’237 PATENT

A. Prior Art Techniques Acknowledged by the ’237 Patent

54. The ’237 patent is directed to electronic tools for meetings, including methods or devices for use in displaying media content. (Ex-1001, 1:15-20; *see also id*., 6:3-26, 17:38-21:33.) In this vein, the ’237 patent recognizes a recent “explosion of communication electronic communication tools” allowing ad hoc communication, such as “synchronous and asynchronous conferencing, online chat, Instant Messaging, audio conferencing, videoconferencing, data conferencing, application sharing, remote desktop sharing, electronic meeting systems, collaborative management (coordination) tools, project management systems, knowledge management systems, and social software systems.” (Ex-1001, 1:25-36.) The ’237 patent contends that “despite the plethora of electronic aids to meetings, fundamental problems in handling meetings have not been solved.” (Ex-1001, 2:21-25.)

55. The ’237 patent acknowledges the known desirability for tools allowing greater participation in a meeting and tools addressing that need, such as the audience response system described in US 2010/0087139 (Ex-1020 (“Glass”)). (Ex-1001, 2:27-44.) The approach taken by Glass uses a USB dongle to effectively turn an electronic device into an audience participation device. (Ex-1020, abstract.) As illustrated below, an embodiment of the Glass system includes linkable response

units 12b coupled by a connector (*e.g.*, a USB plug) to a port in electronic devices 24 (*e.g.*, a laptops). (*See*, *e.g.*, Ex-1020, ¶¶18, 30.) Linkable response unit 12b wirelessly transfers information via a wireless transceiver 30 to a base station 14, which in turn may be displayed on a screen. (*See*, *e.g.*, Ex-1020, ¶¶13, 20.) Linkable response unit 12b may also include a keypad/buttons 46 to trigger transmission of the information. (Ex-1020, ¶33.) A program 42 stored on response unit 12b enables communication between the various devices. (Ex-1020, ¶¶21, 24-26.)

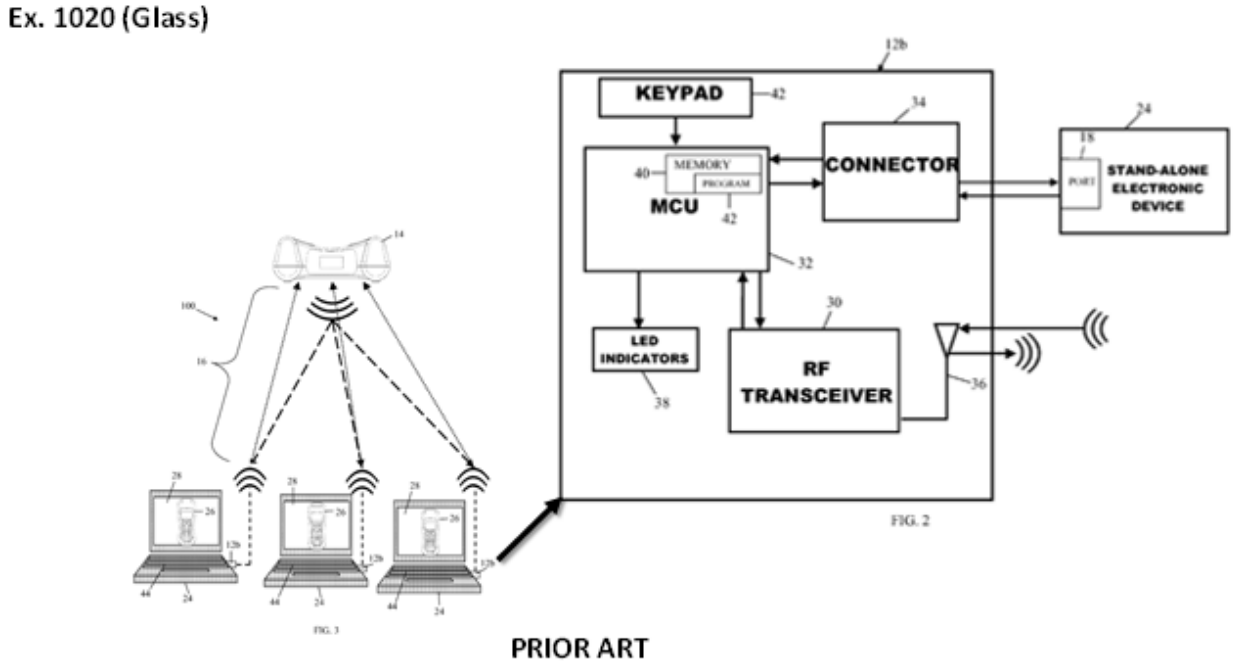

(Ex-1020, FIGs. 2, 3.)

56. The ’237 patent also recognizes three common techniques for transferring content of a computer to a projector. (Ex-1001, 3:12-24.) According to the ’237 patent, “[t]he most common ways are to use a cable that connects the display

adapter of the graphics card to the video input of the projector [method 1] or to use a software that captures the display contents and sends it over a wired or wireless network to a remote base unit connected to the projector [method 2]." (*Id*., 3:12-18.) A known alternative to these techniques was "to use a special device connected to the display adapter of the graphics card that captures, encodes and streams the display content over a wired or wireless network [method 3]." (*Id*., 3:21-24.)

57. As examples of prior art techniques, the '237 patent identifies US Patent Application Publication No. 2009/0198839 (Ex-1021 ("Banerjee")) and US Patent Application Publication No. 2011/0115689 (Ex-1022 ("Sugiyama"). (*Id*., 4:7-14.) The '237 patent admits that these publications describe the use of the "well-known USB interface of the computer for extracting the display content of the computer" and transferring to a projector. (*Id*.) Indeed, Banerjee describes, according to one embodiment illustrated in Figures 4 and 5 (below), a plug-and-play device 236 that physically connects to remote computer 240 and communicates with the master computer 238 over a wireless communications link. (Ex-1021, ¶39.) In this embodiment, "plug-and-play device 236 captures and compresses screen display data generated at the remote computer 240 and allows screen sharing between the remote computer 240 and the master computer 238 by automatically launching software stored on the plug-and-play device 236." (*Id*.)

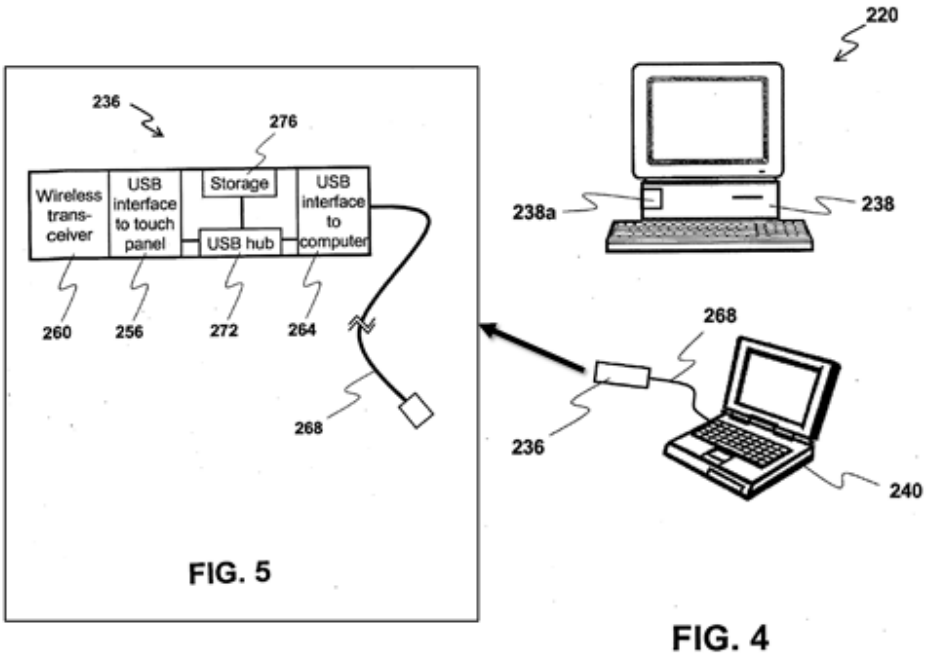

(Ex-1021, FIGs. 4, 5.)

58. Although Figure 4 of Banerjee shows a master computer 238 communicating with a single remote computer 240, Banerjee contemplates that communication can be made to multiple remote computers via respective plug-and-play devices. (Ex-1021, ¶52.) Additionally, the master computer 238 may act as a node for transfer of the screen display data to a projection device 244 for display. (Ex-1021, ¶54.)

B. The Purported Invention

59. The ’237 patent purports to improve problems associated with previous meeting technologies such as the “high demands of technical expertise” and “barriers to the use of complicated technology” and the “lack of, or restriction of

participation by members of the meeting." (Ex-1001, 4:49-61.) Yet, the claims of '237 patent are simply directed to electronic meeting tools that wirelessly communicate media content between an electronic device and a display via a peripheral device and base node—much like the acknowledged prior art discussed in the previous subsection. (*See id.*, 4:7-18, 33:60-36:42; Section VI.A.)

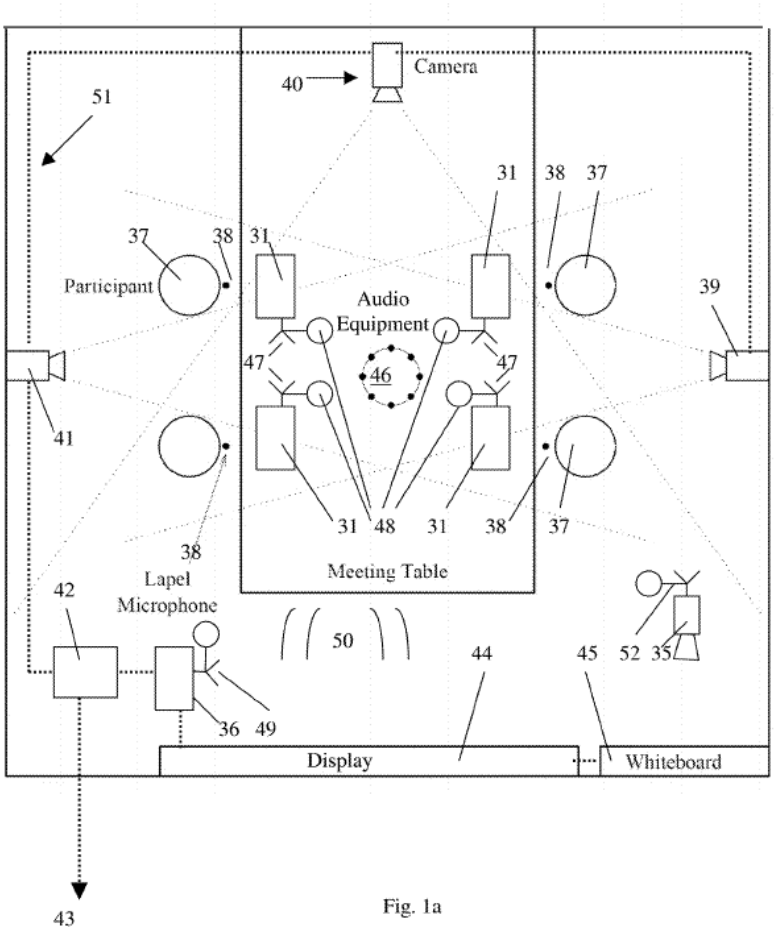

Fig. 1a

(Ex-1001, FIG. 1a)

60. Although described as an alternative method, the '237 patent fails to explain any concrete distinction between these prior art methods. Instead, the '237

patent asserts that the prior art method "usually requires special drivers and even special hardware." (*Id*., 4:14-15.) However, this statement seems to acknowledge that at least some prior art USB-based content sharing methods did not require special drivers and hardware. The content sharing described in the '237 patent employs, for example, plug-and-play devices such as a wireless USB dongle. (*Id.* at 18:10-13, 20:31-46.)

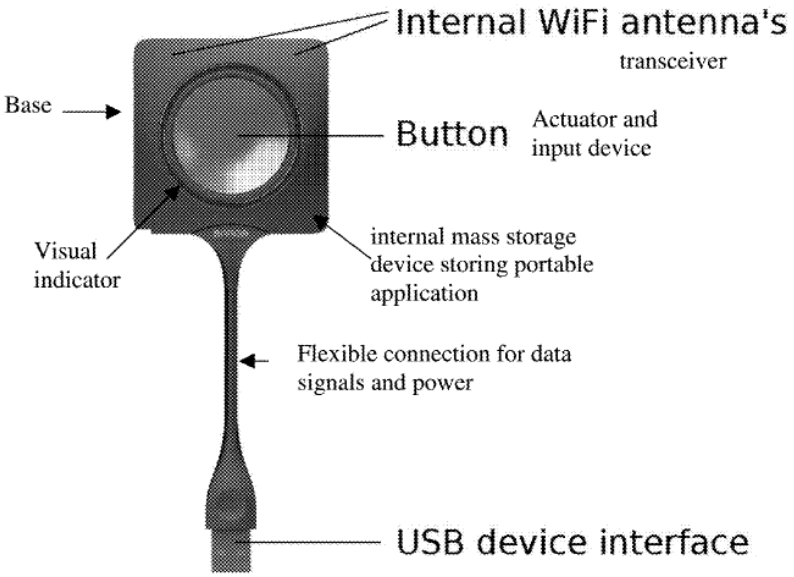

Fig. 10

(Ex-1001, FIG. 10.)

61. Notably, the examiner stated the "primary reason for allowance of the claims is the recitation of 'presenting the external device to the processing device as a human interface device' in combination with the rest of the claims is not taught by

the prior art on record." (Ex-1004, 390-95.) However, external peripheral devices presented to the computer device as a human interface devices (HID) was very well known in the art. (*See, e.g.*, Ex-1030, ¶¶10, 33, FIG. 1 ("HID and MSD [mass storage device] drivers [were] known per se in the art"); Ex-1026, ¶¶3, 10.) Thus, the challenged claims are therefore not meaningfully different from these prior art wireless networking techniques, including, for instance, the methods and systems described in Kaplan, Maeda, Mardiks, Deforche, and others discussed herein. As I discuss above and in further detail below, all features recited in the challenged claims were already known.

C. Prosecution History

62. I have reviewed the prosecution history and noted that the examiner rejected the initial claims examined under pre-AIA 35 U.S.C. §103(a). (Ex-1004, 854-65.) In response, Patent Owner amended the independent claims to additionally recite, in relevant part, "and presenting the external peripheral device to the processing device as a human interface device." (Ex-1004, 669-73; *see additionally*, 674-78.) In response to this amendment, the examiner issued a Notice of Allowance for the ultimately allowed claims, stating that the "primary reason for allowance of the claims is the recitation of 'presenting the external device to the processing device

as a human interface device' in combination with the rest of the claims is not taught by the prior art on record." (Ex-1004, 390-95.)

63. Yet as I discussed above and in further detail below, presenting an external device to the processing device as a human interface device was well known in the art and described for use in similar contexts. Several similar electronic meeting tools discussed herein describe systems that present itself to the processing device as a human interface device, as claimed in the '237 patent. (*See* Section V.) The examiner's rejections, and the prior art used therein, focuses on separate problems than the '237 patent and does not discuss external peripheral devices physically connected to a processing device for transferring media between the processing device and a wireless communications network.

VII. CLAIM CONSTRUCTION

64. I understand that claim terms are typically given their ordinary and customary meanings, as would have been understood by a POSITA at the time of the alleged invention, which, as I explained above, I have been asked to assume is around September 14, 2011.

65. In considering the meaning of the claims, however, I understand that one must consider the language of the claims, the specification, and the prosecution history of record. In general, I have been asked to consider the claim terms under

their plain and ordinary meanings and thus considered the claims, specification, and prosecution history for the ’237 patent in doing so in support of my opinions concerning the ’237 patent and the prior art discussed herein.

66. However, I have also been asked to consider the following descriptions for the terms below. Where the terms appear in the claims, I have read the terms in light of their corresponding descriptions from the ’237 patent in so far it was necessary to apply them to the prior art. I have accounted for these descriptions in forming my opinions whether or not I have specifically addressed those descriptions in further detail in the following sections.

67. Further, I understand the claim construction process has not yet begun in the EDTX case, and thus Patent Owner has not provided a position on the various “means” recited in the challenged claims. I understand some of the terms below presumably invoke 35 U.S.C. § 112(f) (“§ 112(f)”), *i.e.*, is a “means-plus-function” limitation, because each “means” limitation does not recite sufficient structure for performing the recited function.[3] *Williamson v. Citrix Online, LLC*, 792 F.3d 1339,

[3] I understand Petitioner also intends to argue in the parallel litigation that the limitation is indefinite because the ’237 patent specification describes insufficient corresponding structure for the full scope of the function recited for the claimed

1349 (Fed. Cir. 2015). Per 37 C.F.R. § 42.104(b)(3), I understand the Petitioner is obligated to identify the "specific portions of the specification that describe the structure, material, or acts corresponding to each claimed function" for any limitations that invoke § 112(f). *See* Consolidated Trial Practice Guide ("CTPG"), 45 ("Where claim language may be construed according to 35 U.S.C. § 112(f), a petitioner must provide a construction[.]"). I also understand that Patent Owner may contend this limitation does not invoke § 112(f).

68. As set forth below, whether construed as a means-plus function limitation or not, the limitations requiring "means for", or similar language invoking means plus, captures at least the expressly described structure associated with the claimed function and equivalents. But even if these limitations were found to not

---

"means" terms. Recognizing that the Board cannot address indefiniteness in an IPR proceeding, Petitioner satisfies its burden by advancing a means-plus-function construction in the IPR based on the limited corresponding structure described in the '237 Patent. *See DraftKings Inc. v. AG 18, LLC*, IPR2022-01447, Paper 12 at 25 (PTAB Mar. 14, 2023) (instituting review and accepting as procedurally proper a § 112(f) construction advanced in an IPR where the petitioner argued in the parallel litigation that the claim was indefinite for failing to disclose sufficient corresponding structure).

evoke § 112(f), the claimed "means" must be construed broadly enough to capture the specifically disclosed examples and equivalents. Thus, my understanding of the terms, as described in the specification, and the analysis herein also applies to any term regardless of the analysis under § 112(f).

A. "coupled" (claims 1, 9, 18, 19)

69. The '237 patent states that:

> the term "coupled", also used in the description or claims, should not be interpreted as being restricted to direct connections only. Thus, the scope of the expression "a device A coupled to a device B" should not be limited to devices or systems wherein an output of device A is directly connected to an input of device B. It means that there exists a path between an output of A and an input of B which may be a path including other devices or means. (Ex-1001, 15:55-63.)

B. "wireless" (claim 19)

70. The '237 patent states that:

> "Wireless" … can be any network that does not use cable links between nodes, e.g. uses RF, optical or InfraRed for communication purposes, such as IrDA, diffuse infra-red, WLAN, WiMax, WiFi, WiFi Direct, Bluetooth or any other wireless communication network known to the person skilled in the art. (Ex-1001, 14:25-30.)

C. "means for coupling an external peripheral device physically to a port of the processing device" (claim 9)

71. The term "means for coupling" presumably invokes means-plus-function language and refers to the connector of the external peripheral device that physically connects to a port of the processing device. The "means for coupling" appears to relate to the following passages in the specification:

> an external peripheral device compris[es] a connector adapted to couple to a port of a user processing device 31. (Ex-1001, 18:16-17; *See also id.*, Abstract, 6:15-17)

D. "means for presenting the external peripheral device" (claim 9)

72. The term "means for presenting the external peripheral device" presumably invokes means-plus-function language and refers to a portion of software code. The "means for presenting the external peripheral device" appears to relate to the following passages in the specification:

> The first software code portion can be adapted to present the peripheral device to the processing device as a human interface device. (Ex-1001, 9:6-8; *See also id.*, 9:8-16, 10:5-15)

E. "means for … display data communication and audio communication" (claim 9, 18)

73. The term "means for … display data communication and audio data communication" presumably invokes means-plus-function language and refers to an

interface using the generic communications protocol described in the specification. The "means for … display data communication and audio data communication" appears to relate to the following passages in the specification:

> [O]ne of the pre-installed generic drivers of the operating system on the relevant computer device 31, 36 is exploited for setting up communication from the computer device 31, 36 to the network 50 via the connection unit 47 (optionally 49)….the connection unit 47, (optionally 49) operated as a peripheral device communicates with the relevant processing device 31, 36 by using a generic communication protocol provided by the pre-installed generic driver. (Ex-1001, 19:61-20:22.)

F. "means for routing" (claim 9)

74. The term "means for routing" presumably invokes means-plus-function language and, to the extent any structure can be identified as corresponding to this function, appears to refer to at least one channel of the "communications network" of claim 9. The "means for routing" appears to relate to the following passages in the specification:

> Having been routed over a communications network to the base unit 33, the incoming stream is read from the communications interface (Ex-1001, 33:3-5, 29:50-30:8 ("there is at least one channel from the peripheral device to the base node"), clm 19.)

75. I understand that no terms of the '237 patent have been construed by a court at this point.

VIII. OVERVIEW OF THE PRIOR ART

A. Kaplan (Ex-1027)

76. Like the ’237 patent, Kaplan discloses methods for transmitting video content between a computing device and display device. (Ex-1027, abstract). In particular, Kaplan recognizes the problem that setting up wireless network configurations was a “complicated process that many users find difficult and frustrating.” (*Id.*, ¶3.) In fact, Kaplan discloses that the difficulty in setting up and operating 802.11-based networks was a contributing factor to the high level of customer returns of wireless networking equipment. (*See id.*) In that regard, Kaplan’s methods seek to “provide a user with the ability to conveniently view video footage … without having to perform any wireless network setup procedure.” (*Id.*, ¶9.)

77. Kaplan, therefore, describes a communications system 100 in which a computer 220 is wirelessly connected to a display device 210 via a USB transmitter 120. (*See, e.g.*, Ex-1027, ¶¶16-18 and FIG. 2, reproduced below.) The transmitter 120 is pre-paired with a receiver 110 which is connected to the display device 210, such that a user does not need to configure the wireless connection. (Ex-1027, ¶18). In this system, “the user may select a video to be played and the selected video footage may be transmitted from the computer 220 through the transmitter 120 to the receiver 110 and then displayed on the display device 210.” (Ex-1027, ¶28).

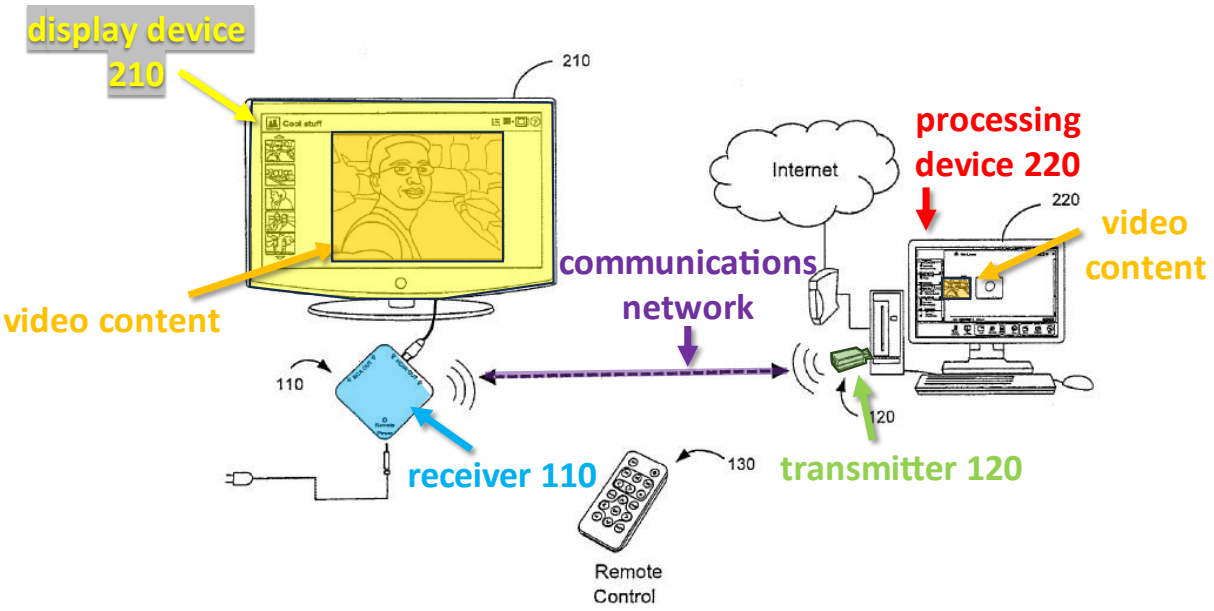

FIG. 2

(Ex-1027, FIG. 1.)

78. The method disclosed by Kaplan provided numerous benefits, including: "(1) no cables between the TV and the computer, (2) no need for wireless network setup or configuration by the user; (3) no complex software installation or online setup; (4) no long delays, video download, or general 'wait time;' and/or (5) completely secure (e.g., no one else can view personal videos)." (Ex-1027, ¶40).

B. Maeda (Ex-1031)

79. Like the '237 patent, Maeda recognizes the issues regarding a physical connection between the computing device and a projector, such as it being a "time-consuming process" and having "to reconnect the PC and projector each time" you want to switch to a new user." (Ex-1031, ¶3.) Maeda also recognizes that "wireless

image transmission systems have been proposed" to "improve the usability of projectors." (Ex-1031, ¶4). To demonstrate, Maeda discusses prior systems for wireless image transmission, including a transmission system (as FIG. 12 of Maeda) that has multiple PCs as image generation devices and a projector and screen for displaying projected images from the PCs, where each PC and the projector is provided with a wireless communications module for wireless connection to each other. (Ex-1031, ¶6.)

80. The system of Maeda, thereafter, discloses using a PC as an image generation device to generate images and audio, to be transmitted to a projector using a wireless local area network (LAN). (Ex-1031, ¶15.) In operation, the "screen displayed on the display of PC 100 is transmitted from PC 100 to projector 200 and the screen received by projector 200 is projected onto a screen 30. A wireless LAN card 10 containing a wireless LAN chip is attached to PC 100, thereby transmitting image signals and audio signals to projector 200 via the wireless LAN." (Ex-1031, ¶17.)

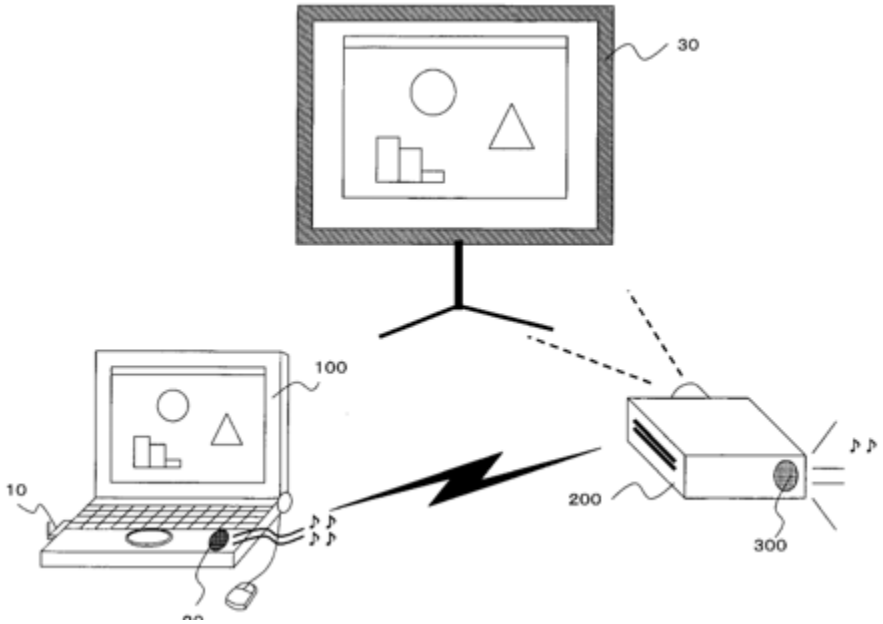

(Ex-1031, FIG. 1)

C. Mardiks (Ex-1026)

81. Similar to the ’237 patent, Mardiks teaches a peripheral device utilizing a USB connecting to a computing device that automatically launches an application residing in its memory after it is connected to a host. (Ex-1026, abstract.) Mardiks disclosed that the Universal Serial Bus (USB) standard provides a communications protocol that allows interfacing between the host device and peripheral devices, which may be keyboards, compact disc (CD) players, USB flash drives, or other similar devices. (Ex-1026, ¶1.) Mardiks recognizes that the USB standard did not provide for automatic launching of programs for flash drives; therefore, Mardiks teaches a method to “configure a USB flash drive so that, upon connection to a host supporting the USB standard … the USB flash drive would automatically launch an

application residing in its memory." (Ex-1026, ¶¶4-5.) This provides the advantage in that the user was not required to manually input the additional command to launch the application. (Ex-1026, ¶4.)

82. In this regard, Mardiks discloses a USB peripheral device 10 which included a USB interface 14, a controller 16, and a non-volatile memory 18 therein. (Ex-1026, ¶19.) Further, an "application may reside on the non-volatile memory 18. Accordingly, the startup script may be written to cause the host 12 to execute the application." (Ex-1026, ¶24.) Alternatively, the startup script may be written to either cause the host to automatically execute an application on a network or residing within the host itself. (Ex-1026, ¶26.)

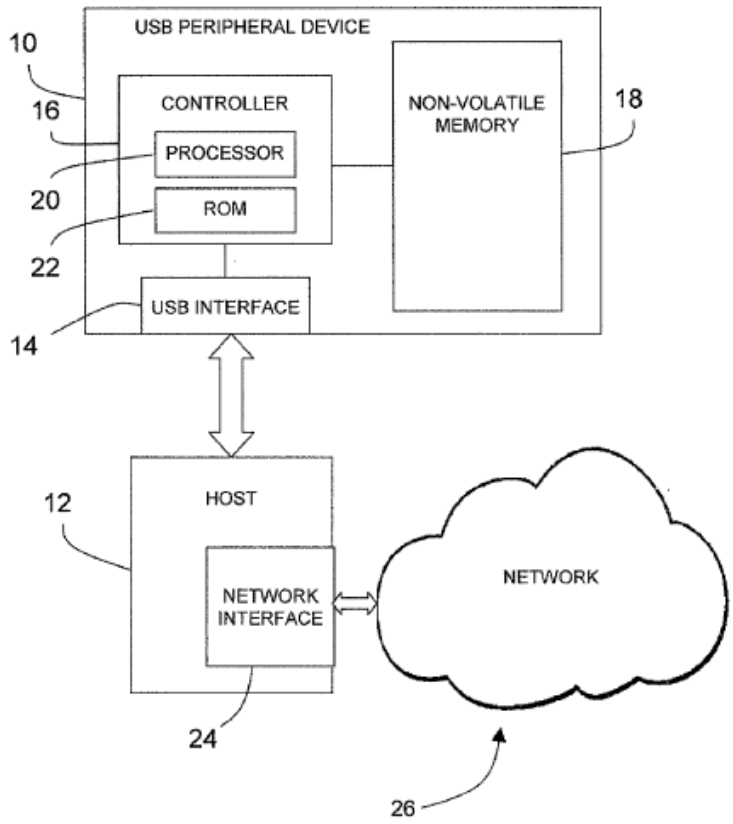

Fig. 1A

(Ex-1026, FIG. 1A)

83. Therefore, it was known in the art how to add the capability to automatically launch an application when connecting a peripheral device to a host, including whether the application was stored on the USB peripheral device itself, or on the network or host computing device.

D. Deforche (Ex-1030)

84. Similar to the ’237 patent, Deforche discloses a method of connecting a host computer to a wireless communication network by means of “at least one pre-installed generic driver providing a generic communications protocol (7) for communication between the host computer device and a standard class of computer peripheral devices.” (Ex-1030, abstract). In particular, Deforche defines a “pre-installed generic driver” as “a driver which is installed on the computer device along with the installation of the operating system, i.e. a driver which is standard for the operating system and which is capable of driving a standard class of computer peripheral devices connected to the computer device without requiring installation of a specific driver [such as] a human interface device (HID) [or] a mass storage device (MSD) driver.” (*Id.*, ¶10). These “HID and MSD drivers [were] known per se in the art.” (*Id.*).

85. In operation, the “[d]ata traffic from the computer device towards the wireless communication network and vice versa is routed over this modem/host communication interface and uses the generic communication protocol provided by the pre-installed generic driver.” (*Id.*, ¶9). Deforche recognizes that this method provided an advantage to users of avoiding the “need for a specific driver for the communication between the wireless modem device and the computer device” to be downloaded/installed, increasingly important for users with restricted user rights,

i.e., user rights do not allow for installation of the necessary driver to the device (*Id.*). A further advantage noted by Deforche in its disclosed method is that the method leaves zero footprint, i.e. the wireless modem device "leaves no trace … on the computer device." (Ex-1030, ¶16).

IX. THE PRIOR ART DISCLOSES AND/OR SUGGESTS THE RECITED FEATURES OF CLAIMS 1, 3, 9, 18, and 19 OF THE '237 PATENT

A. Ground I – Claims 1, 3, 9, 18, and 19 are obvious in view of Kaplan and Mardiks

1. Motivation and Rationale to Combine

86. Kaplan relates to systems and methods for the wireless transmission of data/multimedia through a wireless network using a peripheral device physically attached to the computing device through its USB port. (Ex-1027, ¶21, FIG. 2.) Mardiks relates to a USB peripheral device and methods for presenting the peripheral device to the computing device upon its connection. (Ex-1026, ¶¶ 6, 8.) For example, Kaplan discusses in detail a system and method that can remotely display video content, including its audio content, through the use of a peripheral wireless device physically attached to the computing device. (Ex-1027, ¶¶6-8, 21.) However, Kaplan's system does not explicitly disclose presenting the peripheral wireless device to the computing device as a "human interface device."

87. However, a POSITA would have found that Mardiks discloses a method and peripheral device which presents itself as a human interface device

(HID). (Ex-1026, ¶¶ 6, 8, 27-30). Further, Mardiks teaches a method and device capable of, through its presentation to the computing device as a human interface device (HID), automatically launching an application residing in its memory after it is connected to a host computing device. (Ex-1026, ¶¶6, 8, 27-30.) Thus, a POSITA would have been motivated to combine the teachings of Mardiks with the system of Kaplan because the POSITA would have recognized the combined system provided, at the least, a streamlined and more user-friendly application of Kaplan's system—no user input or configuration is required to launch the application stored on the peripheral device's memory. Further, the POSITA would have recognized the combination as a simple application of known techniques—applying Mardiks' presentation as a human interface device to Kaplan's transmission of audio/video data to enable the automatic launch of a stored application upon the peripheral device's connection with the computing device. A POSITA would have further recognized that the modification would yield the predictable result of a system which automatically launches a stored application to enable Kaplan's remote audio/visual data transmission to a wireless network.

2. Claim 1

88. The teachings of Kaplan and Mardiks disclose and/or suggest all the limitations of claim 1 as a whole.

a. Limitation 1(pre): A method for connecting a processing device to a communications network, the processing device having a memory, a display, an operating system and communication between processing device and a class of peripheral devices, the method comprising:

89. I have been asked to assume the preamble of claim 1 is limiting for the purposes of my analysis. If the preamble is not limiting, it would not affect my analysis for the limitations below.

90. Kaplan discloses a method for connecting a computer 220 (*e.g.*, a "processing device") to a communications network via a transmitter 120. (*See*, *e.g.*, Ex 1027, ¶¶5-9, 16-18, 23, 57-61, FIGs. 2 (reproduced below) and 6.) Kaplan also discloses a method of communication between computer 220 and a class of peripheral devices, such as mass storage devices. (*See*, *e.g.*, Ex 1027, ¶¶50-52 ("[D]uring an initial connection, the transmitter 120 may identify itself to the computer 220 as a mass storage device."); *see also* Ex-1005, ¶¶36-41; Ex-1006, ¶¶72-80, 81; Ex-1009, Ex-1009, ¶¶39-42; Ex-1033, ¶¶63, 70; Ex-1034, ¶¶14-17.) According to Kaplan, setting up and operating 802.11 wireless networks "is a challenging endeavor for many users." (Ex 1027, ¶3.) This is at least in part due to the need for the user to "set the Service Set Identifier (SSID), password, and/or parameters that enable the various networks elements to communicate." (Ex-1027, ¶18.) To address this, Kaplan's transmitter and receiver come with such settings

pre-set. (*Id.*) Accordingly, the user is provided with a fully functioning communication system when the user first installs the equipment. (*Id.*)

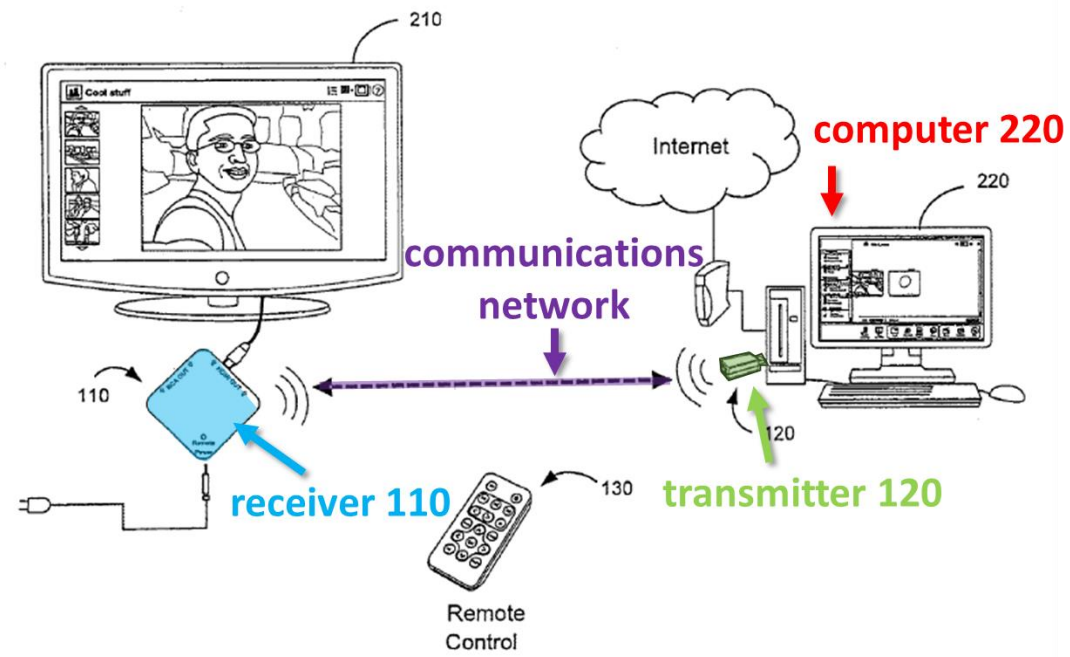

FIG. 2

(Ex-1027, FIG. 2)

91. Kaplan also discloses computer 220 includes a display, which is can be seen in Figure 2 above, a memory, and an operating system, such as Windows®. (*See*, *e.g.*, Ex-1027, ¶¶47-49, 59, FIG. 2.)

b. Limitation 1(a): coupling an external peripheral device physically to a port of the processing device, the external peripheral device having a transceiver and a connector configured to couple to the port of the processing device

92. Kaplan discloses and/or suggests this limitation. For example, Kaplan discloses coupling a transmitter 120 (*e.g.*, an "external peripheral device")

physically to a USB port of the computer 220 (*e.g.*, the "processing device"). (*See*, *e.g.*, Ex-1027, ¶21 ("[T]ransmitter 120 is inserted into the USB port of a computer."), FIG. 2 (reproduced below); *see also* Ex-1005, ¶¶54, 55, 62; Ex-1006, ¶137; Ex-1009, ¶¶39, 47-48, 66, Ex-1033, ¶70, Ex-1034, ¶¶14-17.)

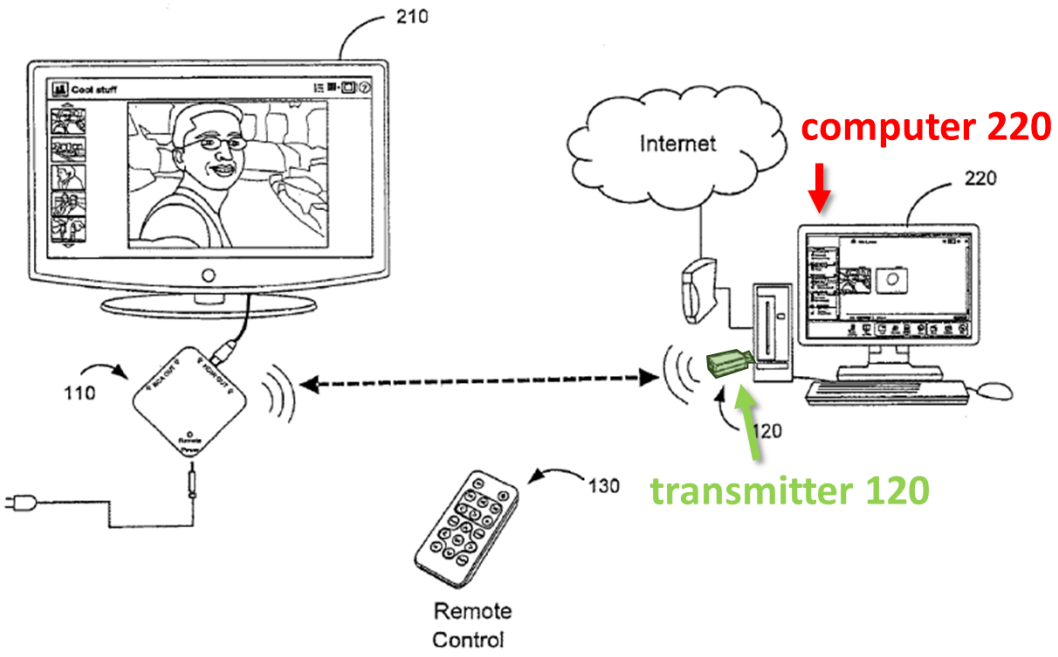

FIG. 2

(Ex-1027, FIG. 2.)

93. Kaplan's transmitter 120 (*e.g.*, the "external peripheral device") includes a transceiver 450 and a connector 122 (also USB connector 410) configured to couple to the USB port of the computer 220. (*See*, *e.g.*, Ex-1027, ¶¶19 ("[T]he transmitter 120 includes a wireless transceiver 450 that is operable to transmit data from the computer to the receiver 110"), 16-17 ("In a particular embodiment, the

transmitter 120 is a dongle including a connector 122 compliant with the Universal Serial Bus (USB) standard and operable to be inserted into a USB port of a computer, for example, a personal computer. As described in greater detail in FIG. 4, the transmitter 120 includes a wireless transceiver 450 that is operable to transmit data from the computer to the receiver 110.”), 45 (“The transmitter 120 includes a USB connector 410 connected to processor 430…. The transmitter 120 also includes transceiver 450.”), FIGs. 1 and 4 (reproduced below).) Further, the transmitter 120 “may includ[e] software that is configured to access video footage stored on a computer....and may be uploaded to and installed to the computer....[wherein] the user is able to access video footage or other media stored on the computer, transmit the media to the receiver 110, and view and/or listen to the media on the display device 210.” (Ex-1027, ¶22.)

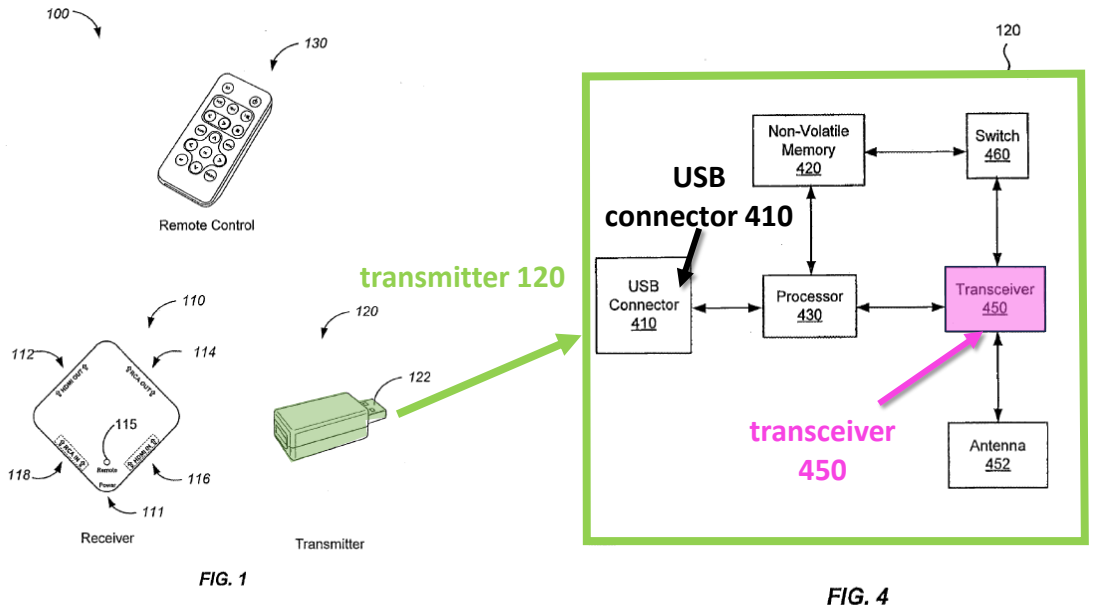

(Ex-1027, FIGs. 1 and 4.)

c. Limitation 1(b): presenting the external peripheral device to the processing device as a human interface device

94. The combined teachings of Kaplan and Mardiks disclose and/or suggest this limitation. For example, Kaplan discloses that, when the transmitter 120 (*e.g.*, a USB dongle) is connected to the USB port of the computer, the transmitter 120 (*e.g.*, the "external peripheral device") initially presents itself to the operating system of the computer as a device from a standard class of peripheral devices (other than a wireless device), namely a removable disk drive. (Ex-1027, ¶¶46-52, 58-60). Kaplan explains that upon detecting the transmitter, the operating system may be configured to check the contents of non-volatile memory 420 for an "autoplay.inf"

file. (Ex-1027, ¶47.) The "autoplay.inf" file then directs the operating system to a stored software application and the operating system executes the stored application, which may be use to install software for use with media transmission. (*Id*., ¶¶47-48.)

95. An alternative approach to presenting the peripheral device as a mass storage device is described by Mardiks. Similar to Kaplan and the '237 patent, Mardiks relates to presenting a USB peripheral device to a computer and, in particular, to allow the automatic launch of software residing on the peripheral device. This allows use of the peripheral device simply by plugging it in and avoids the need for user installation of a special driver. (Ex-1026, ¶¶3-6; Ex-1001, 25:7-23, 23:7-38.)

96. In particular, Mardiks discloses a technique where an external peripheral device (such as a USB flash drive) initially presents itself as from a different class of device (human interface device), namely, a keyboard, to enable the launch of a stored application residing on the USB peripheral device. (*See, e.g.*, Ex-1026, ¶¶5-7, 18-20, 27-30.) Mardiks explains that the "USB standard does not provide the option of automatically launching a program residing on a USB flash drive after the USB flash drive is simply connected to the host. Instead, the host

must receive an additional command, which is an added step for the user if he or she must provide the command." (Ex-1026, ¶4.)

97. To provide commands to launch a file in a mass storage peripheral device, Mardiks discloses that the USB peripheral device presents as keyboard, where "the host uses its USB keyboard driver for communications with the USB peripheral device." (Ex-1026, ¶28.) The class the includes the keyboard is the human interface device (HID) class. (Ex-1026, ¶3.)

98. Mardiks explains that "a stream of emulated keystrokes is sent from the USB peripheral device to the host [and causing] to generate and execute a startup script, as if a user were to manually type the corresponding keystroke on a keyboard." (Ex-1026, ¶30; *see also id.*, ¶¶18-20, 27-30, FIGS. 1A and 2A (both reproduced below).)

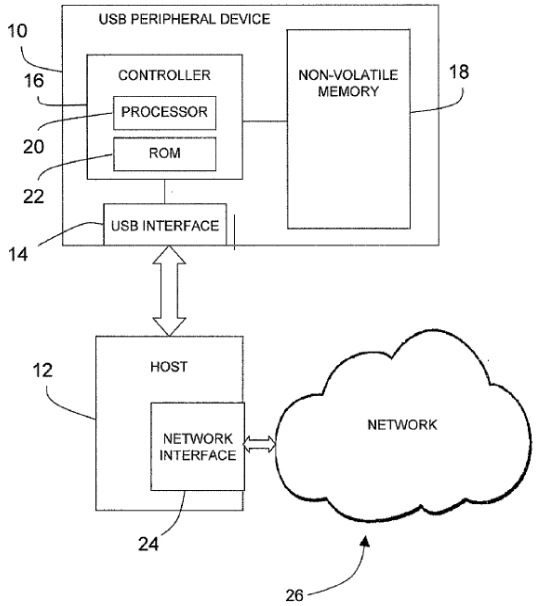

Fig. 1A

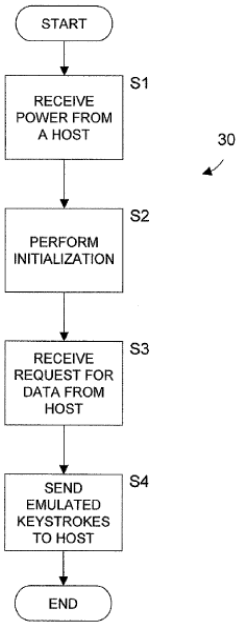

Fig. 2A

(Ex-1026, FIGs. 1A and 2A.)

99. Thus, very similar to Kaplan, Mardiks describes a method of presenting a peripheral device to a host computer from a standard class of devices (mass storage in the case of Kaplan and human interface device in the case of Mardiks). Both use a similar technique to enable the peripheral device to be a plug-and-play device, whereby simply plugging in the peripheral device, the peripheral device can launch an application stored on the peripheral device. Based on the similarities and likelihood of success, a POSITA would have recognized that the approach in Kaplan could have been substituted for that of Mardiks or utilized in addition to the approach in Kaplan and would have been motivated to combine the teachings of each to provide a more user-friendly system that avoids configuration details.

100. A POSITA would have had a reasonable expectation of success in implementing software to present a peripheral device as a human interface device given that such identification was well within the ordinary abilities of a POSITA.

d. Limitation 1(c): communicating at least one of audio data and display data from the processing device to the external peripheral device via the human interface device

101. The combined teachings of Kaplan and Mardiks disclose and/or suggest this limitation. For example, Kaplan discloses communicating at least one of audio data and display data from computer 220 (*e.g.*, the "processing device") to transmitter 120 (*e.g.*, the "external peripheral device"). (*See*, *e.g.*, Ex-1027, ¶¶17 ("[T]he transmitter 120 includes a wireless transceiver 450 that is operable to transmit data from the computer to the receiver 110. For example, the data may include video and audio data for display on the display device."), 28 ("[T]he user may select a video to be played and the selected video footage may be transmitted from the computer 220 through the transmitter 120 to the receiver 110 and then displayed on the display device 210."); *see also* Ex-1034, ¶¶90, 93.)

102. As discussed above (*see* limitation 1(b)), the combined teachings of Kaplan and Mardiks discloses that the transmitter 120 may be presented as a human interface device, so that communication of audio data and display data is achieved via the human interface device.

e. Limitation 1(d): reading the audio data from the port

103. Kaplan and/or Mardiks disclose and/or suggest this limitation. For example, Kaplan discloses that transmitter 120 is connected to a USB port and data (which may include audio data) is "transmitted from the computer 220 through the transmitter 120." Thus, a POSITA at the time of invention would have understood the transmitter 120 must read audio data from the USB port of the computer 220 (which then may be processed) before transmission by the transceiver 450. (*See*, *e.g.*, Ex-1027, ¶17 ("[T]he data may include video and audio data."), 27 (explaining the transmitter may perform at least part of the processing of the data), 28 ("[T]he user may select a video to be played and the selected video footage may be transmitted from the computer 220 through the transmitter 120 to the receiver 110 and then displayed on the display device 210."), FIGs. 1, 4.)

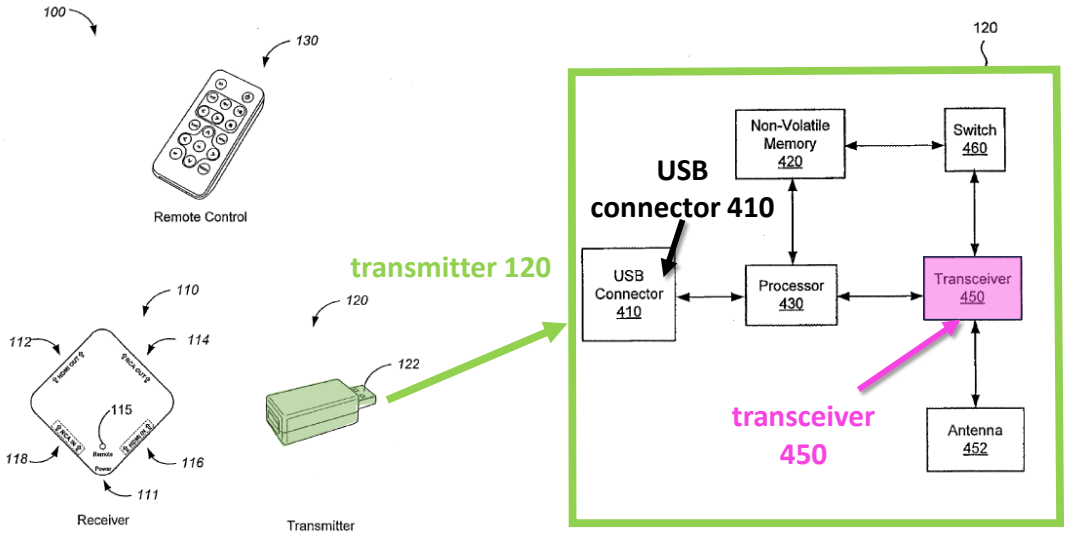

FIG. 1 FIG. 4

(Ex-1027, FIGs. 1 and 4.)

f. Limitation 1(e): connecting the processing device to a communications network via the transceiver

104. Kaplan and/or Mardiks disclose and/or suggest this limitation. For example, Kaplan discloses connecting the computer 220 (*e.g.*, the "processing device") to a two-way communications network via the transceiver 450 of the transmitter 120. (*See*, *e.g.*, Ex-1027, ¶¶6, 9, 18, 23 (("It should be noted that various methods for identifying the receiver 110 as a network element may be used."), 25, 31, 45, FIG. 2 (reproduced below).) For example, Kaplan's transmitter 120 is pre-paired with the receiver 110 to form the communications network to which the computer 220 is connected. (*See*, *e.g.*, Ex-1027, ¶¶18 ("[T]he receiver 110 and the

transmitter 120 are pre-paired during the manufacturing process. Thus, when a user first sets up the communications systems, there is no need for the user to pair or define settings associated with the communication that occurs between the receiver 110 and the transmitter 120. This embodiment contrasts with conventional wireless networking equipment, for which a user typically needs to manually pair the various devices prior to use. As an example, in a conventional 802.11-based network, a user needs to set the Service Set Identifier (SSID), password, and/or other parameters that enable the various network elements to communicate. In the embodiments described herein, such settings are pre-set at the time of manufacturing as part of the manufacturing process or at other time prior to delivery to the user. Thus, when the user first installs the equipment, the parameters necessary for two-way communications between the receiver 110 and the transmitter 120 are already set. As a result, the user is provided with a fully functioning communications system straight "out-of-the-box."), 53, 54; *see also* Ex-1005, ¶¶35, 39-42, 50-57, 61-62; Ex-1009, ¶¶40-41, 65, 68, 90, 165-167; Ex-1033 ¶70; Ex-1034 ¶¶14-15.)

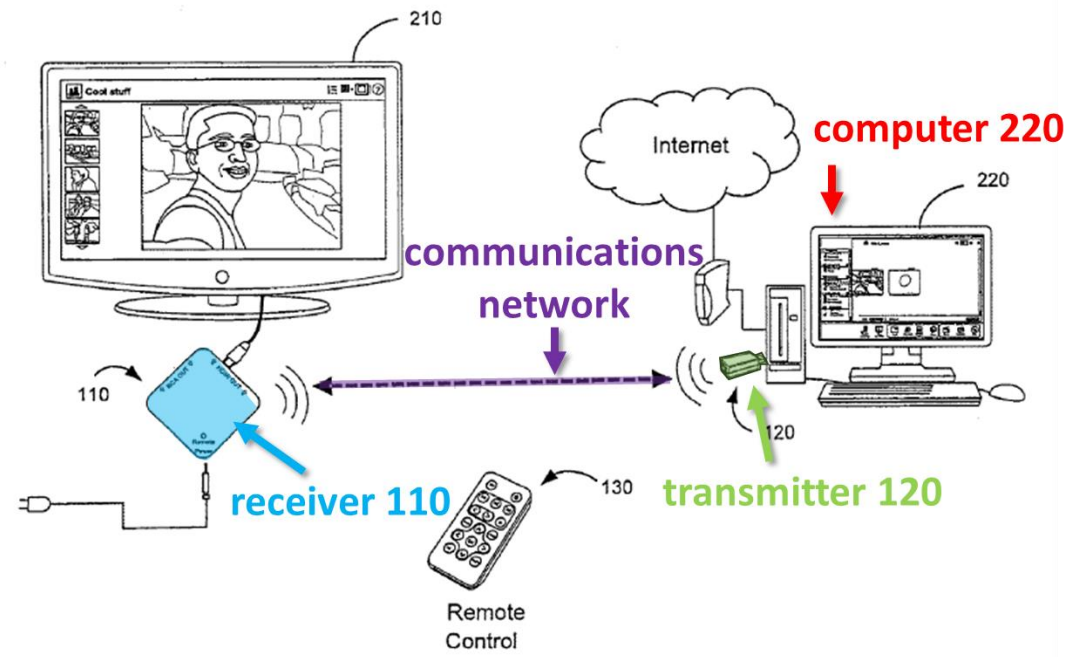

FIG. 2

(Ex-1027, FIG. 2)

g. Limitation 1(f): display data and audio data being routed between the processing device and the communication network via the transceiver and further to a base node

105. Kaplan and/or Mardiks disclose and/or suggest this limitation. For example, Kaplan discloses routing display and audio data between the computer 220 and the communications network via transceiver 450 of the transmitter 120 and further to receiver 110 (*e.g.*, a "base node"). The display and audio data is then routed to the receiver 110, for example, for the display and video data to be presented as video content on the display device 210. (*See*, *e.g.*, Ex-1027, abstract, ¶¶2-6, 16-17 ("[T]he transmitter 120 includes a wireless transceiver 450 that is operable to

transmit data from the computer to the receiver 110. For example, the data may include video and audio data for display on the display device."), 18, 28 ("[V]ideo footage may be transmitted from the computer 220 through the transmitter 120 to the receiver 110 and then displayed on the display device 210), 44, FIG. 2 (reproduced below).)

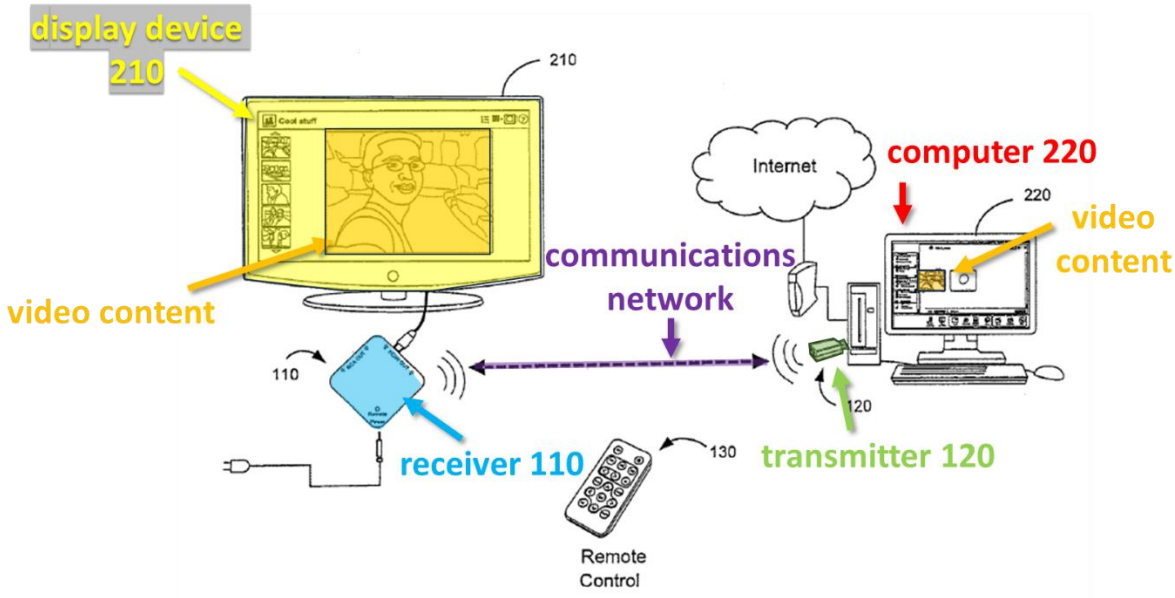

FIG. 2

(Ex-1027, FIG. 2.)

3. Claim 3: The method of claim 1, further comprising presenting the external peripheral device to the processing device as any of the following: a mass storage device; and a composite device

106. The combined teachings of Kaplan and Mardiks disclose and/or suggest all the limitations of claim 3. For example, Kaplan discloses presenting the transmitter 120 to the computer 220 as a mass storage device, such that a pre-

installed mass storage device driver can be used to communicate with the transmitter 120. (*See*, *e.g.*, Ex-1027, ¶¶46 ("[T]he transmitter may identify itself to the computer 220 as a mass storage device."), 50-52, 59-60; *see also* Ex-1030, ¶¶31, 33.)

4. Claim 9

107. The combination of Kaplan and Mardiks disclose and/or suggest all the limitations of claim 9 for reasons similar to those discussed above for Claim 1. (*See* Section IX.A.2.)

a. Limitation 9(pre): A system for connecting a processing device to a communications network, the processing device having a memory, a display and an operating system and communication between processing device and a class of peripheral devices, the system comprising

108. The combination of Kaplan and Mardiks discloses and/or suggests this limitation for reasons similar to those discussed above for limitation 1(pre). (*See* Section IX.A.2.a.)

b. Limitation 9(a): means for coupling an external peripheral device physically to a port of the processing device, the external peripheral device having a transceiver and a connector configured to couple to the port of the processing device

109. The combination of Kaplan and Mardiks discloses and/or suggests this limitation for reasons similar to those discussed above for limitation 1(a). (*See* Section IX.A.2.b.)

c. Limitation 9(b): means for presenting the external peripheral device to the processing device as a human interface device

110. The combination of Kaplan and Mardiks discloses and/or suggests this limitation for reasons similar to those discussed above for limitation 1(b). (*See* Section IX.A.2.c.)

d. Limitation 9(c): means for at least one of display data communication and audio communication between the external peripheral device and the processing device via the human interface device

111. The combination of Kaplan and Mardiks discloses and/or suggests this limitation for reasons similar to those discussed above for limitations 1(b)-(c). (*See* Section IX.A.2.c-d.)

e. Limitation 9(d): wherein the external peripheral device is configured to connect the processing device to a communications network via the transceiver

112. The combination of Kaplan and Mardiks discloses and/or suggests this limitation for reasons similar to those discussed above for limitation 1(e). (*See* Section IX.A.2.f.)

f. Limitation 9(e): means for routing display data and audio data between the processing device and the communication network via the means for display data and audio data communication and the transceiver to a base node

113. The combination of Kaplan and Mardiks discloses and/or suggests this limitation for reasons similar to those discussed above for limitation 1(c), 1(f). (*See* Section IX.A.2.d & g.)

5. Claim 18

114. The combination of Kaplan and Mardiks disclose and/or suggest all the limitations of claim 18 for reasons similar to those discussed above for Claim 1. (*See* Section IX.A.2.)

a. Limitation 18(pre): A peripheral device for providing communication connectivity to a processing device which is provided with memory, a display and an operating system and for communication between the processing device and a class of peripheral device, the peripheral device comprising a connection configured to be physically coupled to a port of the processing device and the peripheral device being adapted to work with executable software code, said executable software code comprising:

115. The combination of Kaplan and Mardiks discloses and/or suggests this limitation for reasons similar to those discussed above for limitations 1(pre)-(a). (*See* Sections IX.A.2.a-b.)

b. Limitation 18(a): a fourth software code for presenting the external peripheral device to the processing device as a human interface device

116. The combination of Kaplan and Mardiks discloses and/or suggests this limitation for reasons similar to those discussed above for limitation 1(b). (*See* Section IX.A.2.c.)

c. Limitation 18(b): a first software code portion for setting up, a means for at least one of display data communication and audio data communication between the peripheral device and the processing device via the human interface device

117. The combination of Kaplan and Mardiks discloses and/or suggests this limitation for reasons similar to those discussed above for limitation 1(c). (*See* Section IX.A.2.d.)

d. Limitation 18(c): a second software code portion for connecting the processing device to a communications network via a transceiver of the external peripheral device

118. The combination of Kaplan and Mardiks discloses and/or suggests this limitation for reasons similar to those discussed above for limitation 1(e). (*See* Section IX.A.2.f.)

e. Limitation 18(d): a third software code portion for routing the display data and the audio data between the processing device and the communication network via the transceiver to a base node.

119. The combination of Kaplan and Mardiks discloses and/or suggests this limitation for reasons similar to those discussed above for limitations 1(c)-(d), 1(f). (*See* Sections IX.A.2.d-e & g.)

6. Claim 19

120. The combination of Kaplan and Mardiks disclose and/or suggest all the limitations of claim 19 for reasons similar to those discussed above for Claim 1. (*See* Section IX.A.2.)

a. Limitation 19(pre): A method for connecting a processing device to a communications network, the processing device having a memory, a display and an operating system, the method comprising

121. The combination of Kaplan and Mardiks discloses and/or suggests this limitation for reasons similar to those discussed above for limitation 1(pre). (*See* Section IX.A.2.a.)

b. Limitation 19(a): coupling an external peripheral device physically to a port of the processing device

122. The combination of Kaplan and Mardiks discloses and/or suggests this limitation for reasons similar to those discussed above for limitation 1(a). (*See* Section IX.A.2.b.)

c. Limitation 19(b): wherein the peripheral device comprises a wireless transceiver and a connector, said connector configured to couple to the port of the processing device

123. The combination of Kaplan and Mardiks discloses and/or suggests this limitation for reasons similar to those discussed above for limitation 1(a). (*See* Section IX.A.2.b.)

d. Limitation 19(c): presenting the external peripheral device to the processing device as a human interface device

124. The combination of Kaplan and Mardiks discloses and/or suggests this limitation for reasons similar to those discussed above for limitation 1(b). (*See* Section IX.A.2.c.)

e. Limitation 19(d): setting up one of an audio communication between the peripheral device and the processing device and a display data communication between the peripheral device and the processing device via the human interface device

125. The combination of Kaplan and Mardiks discloses and/or suggests this limitation for reasons similar to those discussed above for limitation 1(b)-(c). (*See* Section IX.A.2.c-d.) For example, Kaplan discloses setting up one of an audio communication between transmitter 120 (*e.g.*, the "peripheral device") and computer 220 (*e.g.*, the "processing device") and a display data communication between transmitter 120 and computer 220 via the "human interface device" (as suggested by

Mardiks). (*See*, *e.g.*, Ex-1027, ¶¶8, 17, 22, 58 ("The method 600 also includes establishing a connection between a transmitter and a computer (612)."), 47-52, FIG. 6.)

f. Limitation 19(e): the peripheral device being configured to connect the processing device to a communications network via the wireless transceiver

126. The combination of Kaplan and Mardiks discloses and/or suggests this limitation for reasons similar to those discussed above for limitation 1(e). (*See* Section IX.A.2.f.)

g. Limitation 19(f): routing audio data from the processing device to the wireless transceiver via the connector of the peripheral device and the audio communication and routing display data from the processing device to the wireless transceiver via the connector of the peripheral device and the display data communication

127. The combination of Kaplan and Mardiks discloses and/or suggests this limitation for reasons similar to those discussed above for limitations 1(c), 1(f). (*See* Sections IX.A.2.d & g.) As discussed, Kaplan discloses routing data "may include video and audio data for display on the display device." (*See*, *e.g.*, Ex-1027, ¶17, 22, 28, 45.)

h. Limitation 19(g): routing the display data and the audio data from the wireless transceiver of the peripheral device to a base node over the communications network via at least one channel created between the external peripheral device to the base node

128. Kaplan discloses and/or suggests this limitation for reasons similar to those discussed above for limitation 1(f). (*See* Section IX.A.2.g.) Kaplan further discloses that a "communications channel between the transmitter 120 and the receiver 110 is provided in accordance with commercially available wireless communications standards." (Ex-1027, ¶¶31; *see also id.*, 54 ("Typically, the pairing signal includes an encrypted code that enables a secure communications channel between the paired devices."), 61.)

B. Ground II – Claims 1, 3, 9, 18, and 19 are obvious in view of Maeda and Deforche

1. Motivation and Rationale to Combine

129. Maeda and Deforche relate to systems/methods for wireless transmission of data/multimedia through a wireless network. (Ex-1031, ¶17; Ex-1030, abstract.) For example, like the '002 patent, Maeda discusses a system and method that remotely displays video content with audio from a personal computing device (PC). (Ex-1031, ¶17.) The disclosed system uses a PC as an image generation device—generating images and audio—and transmits the image/audio data through an attached wireless LAN card to a projector using a wireless local area network

(LAN) (*i.e*. a wirelessly connected system). (Ex-1031, ¶¶15, 17.) Maeda, however, does not explicitly disclose presenting the wireless LAN card (peripheral device) to the personal computing device (processing device) as a "human interface device."

130. However, a POSITA would have found that Deforche discloses presenting a peripheral device to a processing device as a human interface device (HID). (Ex-1030, ¶¶10, 34, FIG. 1.) Deforche discusses in detail methods and device for the wireless transmission of data. (Ex-1030, abstract, ¶¶9-11.) Deforche recognized in the prior art that, "when a wireless modem is connected for the first time to a computer device, installation of an appropriate driver is required before applications running on the computer device can use the functionality of the wireless modem to connect to wireless networks." (Ex-1031, ¶2.) Deforche recognized this as inconvenient and undesirable, particularly where the user lacked administrator rights or was otherwise restricted from driver installation. (Ex-1031, ¶¶3-6, 28-30.) Similar to the '002 patent, Deforche, therefore, discusses a method that includes connecting a host computer to a wireless communication network and avoids installation of drivers or applications, such as by "setting up, by means of a pre-installed generic driver of an operating system on the computer device, a modem/host communication interface [] for communication between the wireless modem device and the computer device." (*Id*., abstract.) Thus, a POSITA would

have been motivated to combine the teachings of Deforche with the system of Maeda because the POSITA would have recognized the combined system provided, at least, a streamlined and more user-friendly application of Maeda's system—a user is not required to install a separate driver or configure any settings for the peripheral device's functionality. Further, the POSITA would have recognized the combination as a simple application of known techniques—applying Deforche's presentation as a human interface device to Maeda's transmission of audio/video data to avoid configuration by the user. A POSITA would have further recognized the modification would yield the predictable result of a system which could transmit audio/visual data to a wireless network through the peripheral device without user configuration of a separate driver or settings by presenting the peripheral device as a human interface device.

2. Claim 1

131. The teachings of Maeda and Deforche disclose and/or suggest all the limitations of claim 1 of the '237 patent as a whole.

a. Limitation 1(pre): A method for connecting a processing device to a communications network, the processing device having a memory, a display, an operating system and communication between processing device and a class of peripheral devices, the method comprising:

132. I have been asked to assume the preamble of claim 16 is limiting for the purposes of my analysis. If the preamble is not limiting, it would not affect my analysis for the limitations below.

133. To the extent limiting, the combined teachings of Maeda and Deforche disclose and/or suggest this limitation. Maeda discloses a method for connecting a personal computer (PC 100) (*e.g.*, a "processing device") to a communications network. (*See*, *e.g.*, Ex-1031, ¶¶15 ("[A] PC is used as an image generation device that generates images and audio, and the images and audio are transmitted to a projector, which is an image projection device, using a wireless LAN."), 17 ("This transmission system is a system in which a screen displayed on the display of PC 100 is transmitted from PC 100 to projector 200 and the screen received by projector 200 is projected onto a screen 30. A wireless LAN card 10 containing a wireless LAN chip is attached to PC 100, thereby transmitting image signals and audio signals to projector 200 via the wireless LAN."), 19, 76; *see also id.*, FIG. 1; Ex-1005, ¶¶36-41; Ex-1006, ¶¶72-80, 81; Ex-1009, Ex-1009, ¶¶39-42; Ex-1033, ¶¶63, 70; Ex-1034, ¶¶14-17.)

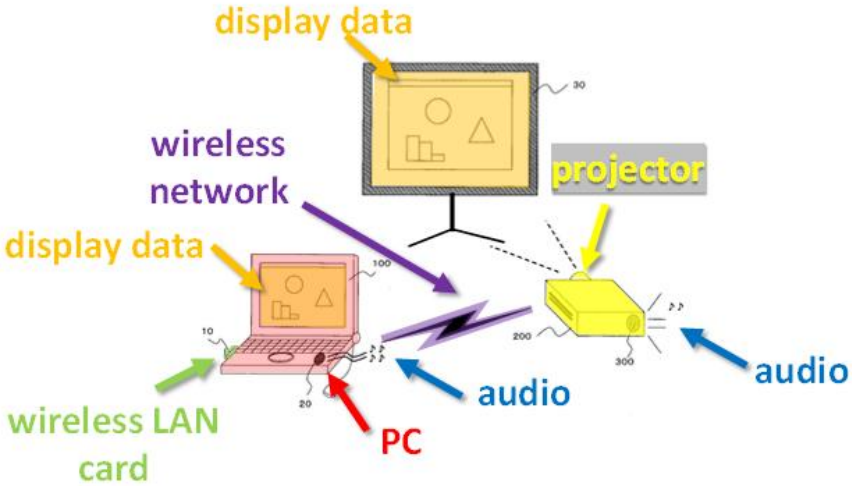

(Ex-1031, FIG. 1.)

134. Maeda also discloses that the PC 100 has a main memory 102 and storage device 103 and a display 110. (*See*, *e.g.*, Ex-1031, ¶19, FIG. 2 (reproduced below).)

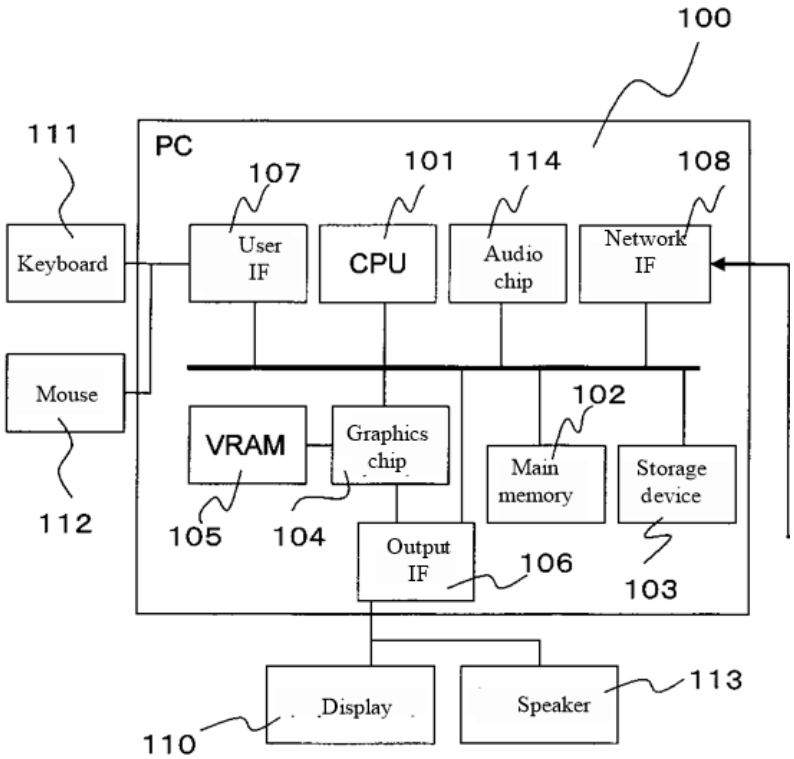

(Ex-1031, FIG. 2 (excerpted.)

135. A POSITA would have understood PC 100 to include an operating system—operating systems was fundamental software to manage components of the PC. (*See*, *e.g.*, Ex-1058, ¶125.) Meada describes several components of the PC (graphics chip 104, a VRAM 105, an audio chip 114, an output IF 106 that outputs to a display 110 and a speaker 113, a user IF 107 for acquiring instruction signals based on user operations from input devices such as a keyboard 111 and a mouse 112, and a network IF 108 which is an interface for communicating with projector 200, and so on). (*See*, *e.g.*, Ex-1031, ¶¶17-19.) A POSITA would have understood such components would have been managed by an operating system (Windows®, Macintosh OS, Linux, etc.), including communication with a class of devices, such as human interface devices, as was known in the art. (*See*, *e.g.*, Ex-1030, ¶¶9-12; Ex-1027, ¶47; Ex-1026, ¶¶1-3.)

136. Moreover, Deforche discloses that a computer has "at least one pre-installed generic driver providing a generic communication protocol (7) for communication between the host computer device and a standard class of computer peripheral devices." (Ex-1030, Abstract.)

b. Limitation 1(a): coupling an external peripheral device physically to a port of the processing device, the external peripheral device having a transceiver and a connector configured to couple to the port of the processing device

137. The combined teachings of Maeda and Deforche disclose and/or suggest this limitation. For example, Maeda discloses coupling a wireless LAN (Local Area Network) card 10 physically attached to PC 100. (*See*, *e.g.*, Ex-1031, ¶17 ("A wireless LAN card 10 containing a wireless LAN chip is attached to PC 100, thereby transmitting image signals and audio signals to projector 200 via the wireless LAN"), FIG. 1 (reproduced below); *see also* Ex-1005, ¶¶54, 55, 62; Ex-1006, ¶137; Ex-1009, ¶¶39, 47-48, 66, Ex-1033, ¶70, Ex-1034, ¶¶14-17.) For this network connection, PC 100 includes a network interface, network IF 18. (*See* Ex-1031, ¶19.)

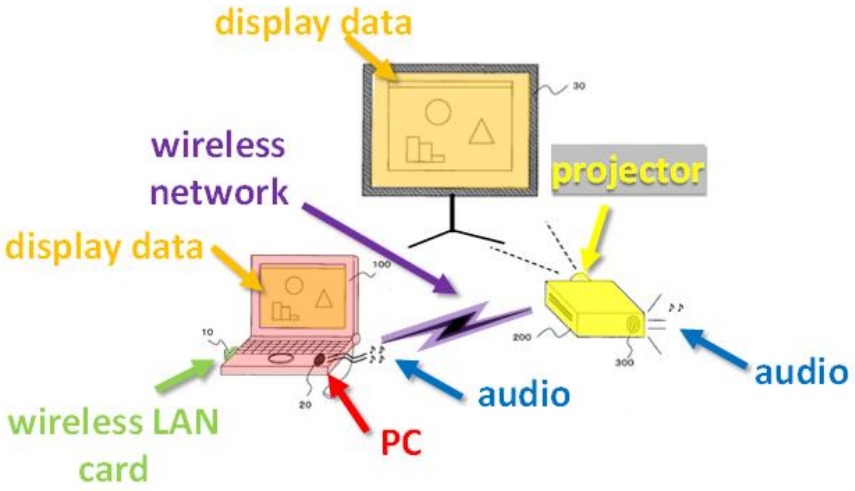

(Ex-1031, FIG. 1.)

138. A POSITA would, at the time of the alleged invention, have have been familiar with and understood that wireless LAN cards, such as wireless LAN card 10 of Maeda, contain a wireless LAN chip (*e.g.*, a wireless transceiver) for sending and receiving data to and from PC 100. (*See*, *e.g.*, Ex-1031, ¶¶17, 53-54; Ex-1059, ¶¶5-6 (explaining that wireless LAN cards (which were also referred to as wireless PC card and wireless network adapters) contain transceivers for wireless communication); Ex-1022, FIG. 2 (illustrating WLAN adapter 5 with a WLAN interface 55, indicative of a transceiver); Ex-1024, ¶16 ("transmission-reception device 3 connected to the input-output port 10 of a unit of electronic equipment 1 is comprised of a control circuit 30, an encryption-decryption module 31, a wireless transceiver module 32, and a communications plug 33"), FIG. 3; Ex-1007, ¶¶18-21, 30 ("The receiver 124 may include a receiver of the same type as the transmitter, and may be integrated as a transceiver."), FIG. 1 (illustrating USB flash drive 100 with transmitter 122 and receiver 124, indicative of a transceiver), 47; Ex-1060, 1:64-2:3 ("The wireless communication system includes a dongle and a transceiver. The dongle has an electrical connector and an antenna. The transceiver is electrically coupled to a central processor and the dongle."), 3:42-64, FIG. 1; Ex-1027, ¶¶17, 45.)

139. Deforche discloses a wireless modem device that is "a computer peripheral device which has an electronic interface for connection to a complementary electronic interface of a computer device (host) and which comprises electronic components for establishing communication between said computer device to which it is connected and a remote device over a wireless communication network." (Ex-1030, ¶6.) Deforche's wireless modem device is configured to communicate in a wireless LAN (WLAN). (Ex-1030, ¶8.) Accordingly, Deforche's wireless modem device is similar to the wireless LAN card 10 of Maeda. (*See*, *e.g.*, Ex-1030, Abstract, ¶¶6-8.) The electronic interface of the wireless modem device can be a USB interface that couples via a standard connector to a port of the host computer. (*See*, *e.g.*, Ex-1030, ¶7.) As illustrated in Figure 2, the USB modem component of the wireless modem device includes a radio interface (IF), which is indicative of a transceiver. (*See* Ex-1030, Abstract, ¶¶6-8, 34 (describing transmitting and receiving data from the network).) Further, Deforche discloses that "software code portions are stored on the wireless modem device...which are configured for performing one or more of the above mentioned steps, *i.e.*, the use of a pre-installed generic driver." (Ex-1030, ¶17; *see also*, Claim 9.)

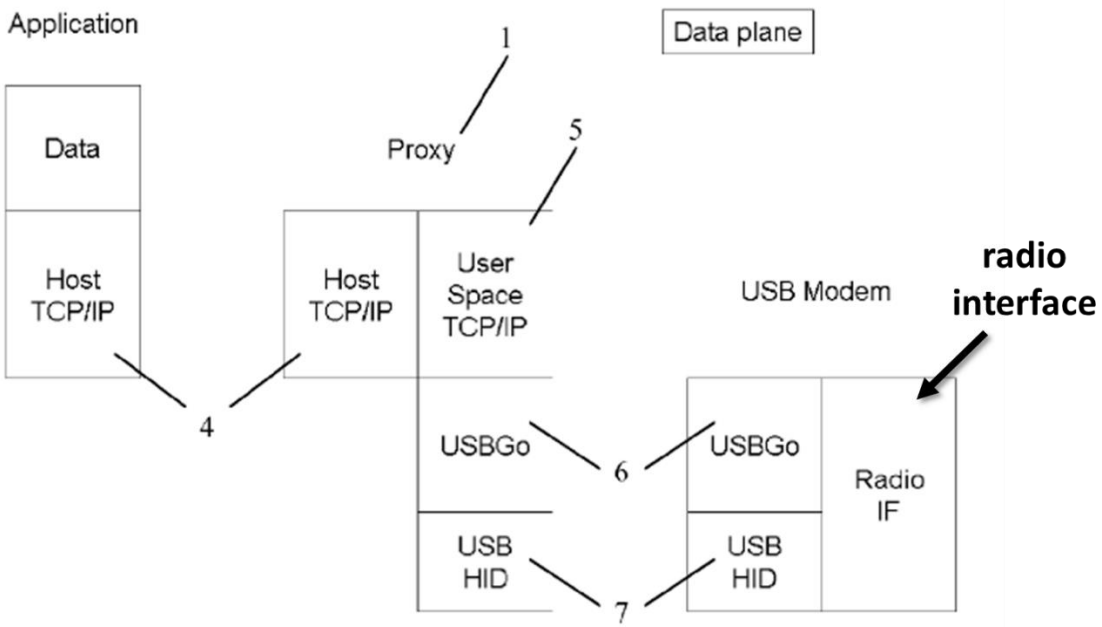

Figure 2

(Ex-1030, FIG. 2)

140. Further, a POSITA would have been motivated to include a transceiver and connector configured to connect to a corresponding port in a wireless LAN card or similar wireless modem device to wirelessly transmit and receive data as was conventional in the art. (*See*, *e.g.*, Ex-1059, ¶¶1-6; Ex-1022, FIG. 2; Ex-1024, ¶16, FIG. 3; Ex-1007, ¶¶18-21, 30, FIG. 1, 47; Ex-1060, 1:64-2:3, 3:42-64, FIG. 1; Ex-1027, ¶¶17, 45.) A POSITA would have had a reasonable expectation of success in implementing such well-known, routine, and predictable technology.

c. Limitation 1(b): presenting the external peripheral device to the processing device as a human interface device

141. The combined teachings of Maeda and Deforche disclose and/or suggest this limitation. As discussed above, a POSITA would have appreciated that Maeda's wireless LAN card 10 couples to PC 100 at network IF 18. (*See*, *e.g.*, Ex-1031, ¶¶15-19.) Morever, Deforche provides additional details on how a wireless modem device, like a wireless LAN adapter, can be configured to communicate with its host computer. Deforche "relates to a wireless modem device connectable to a computer device and a method for operating said wireless modem" and, thus, is from the same general field of technology as the '237 patent (Ex-1031, ¶1; Ex-1001, 1:15-20 (stating that it relates to, among other things, "devices for providing connection to a communications network").) Additionally, Deforche recognizes that, "when a wireless modem is connected for the first time to a computer device, installation of an appropriate driver is required before applications running on the computer device can use the functionality of the wireless modem to connect to wireless networks." (Ex-1031, ¶2.) Deforche recognized this as inconvenient and undesirable, particularly where the user lacked administrator rights or was otherwise restricted from driver installation. (Ex-1031, ¶¶3-6, 28-30.) Deforche also addresses a desire to provide modem functionality in any computer independent of the operating system without leaving a footprint (Zero-Footprint). (Ex-1031, ¶¶28-30.)

Thus, Deforche is also directed to solving problems similar to the ’237 patent. (*See*, *e.g.*, Ex-1001, 24:20-45.)

142. Thus, a POSITA would have had reason to look to the teachings of Deforche in implementing a wireless communications network as described in Maeda and would have been motivated to implement a solution like the one described in Deforche to address similar problems.

143. Deforche, in particular, discloses an approach where the wireless modem device presents itself to the host computer—not as a wireless modem—but as a human interface device or other generic device. (*See*, *e.g.*, Ex-1030, ¶¶10, 33-36, 43-45, 51-52, claim 2, FIG. 1 (illustrates a USB interface 7 exposed to a host computer as a human interface device (HID)).)

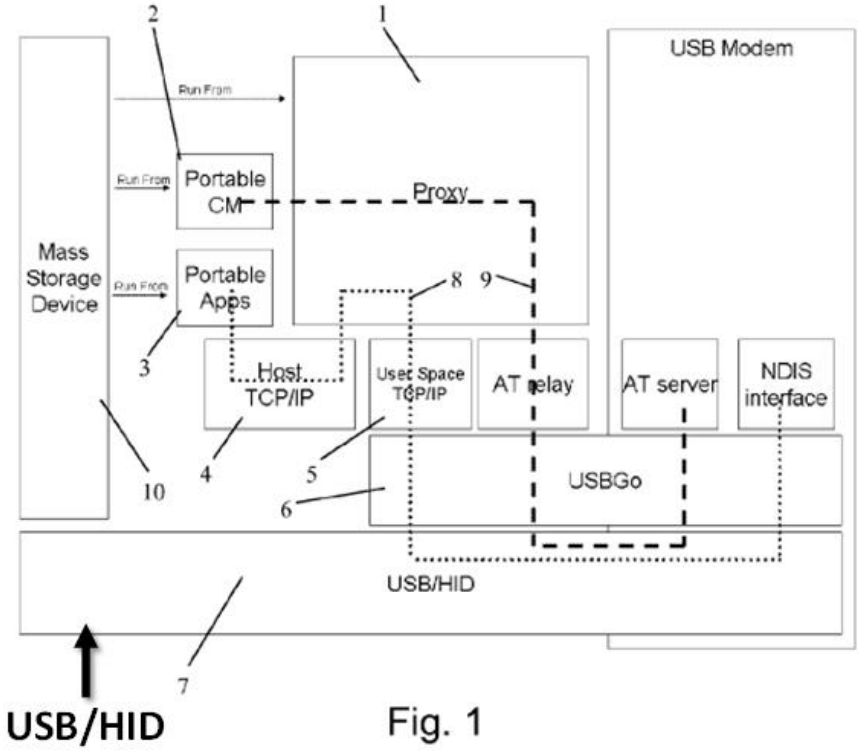

Fig. 1

(Ex-1030, FIG. 1.)

144. As mentioned above, Deforche uses the approach of presenting the wireless modem device as a human interface device (HID) to avoid the need to install a driver for the peripheral wireless modem device. (*See*, *e.g.*, Ex-1030, ¶¶10, 32-39, 43-46, 51-52.) Instead, the operating system of the computer utilizes drivers for HID to establish a channel of communication with the wireless device. (*Id*.)

145. Given the teachings of Deforche and the advantages described therein, a POSITA looking to implement a system like that of Maeda would have been motivated to take advantage of the approach described by Deforche in configuring a peripheral wireless modem device to present itself as a human interface device and

avoid the need to install a separate driver for the wireless device, as discussed above. A POSITA would have had a reasonable expectation of success in achieving the claimed combination given that such identification was well within the ordinary abilities of a POSITA, for example as illustrated by Deforche.

d. Limitation 1(c): communicating at least one of audio data and display data from the processing device to the external peripheral device via the human interface device

146. The combine teachings of Maeda and Deforche disclose and/or suggest this limitation. For example, Maeda discloses communicating at least one of audio data and display data from PC 100 (*e.g.*, the "processing device") to wireless LAN card 10 (*e.g.*, the "external peripheral device") via network IF [interface]108. (*See*, *e.g.*, Ex-1031, ¶¶15 ("[A] PC is used as an image generation device that generates images and audio, and the images and audio are transmitted to a projector, which is an image projection device, using a wireless LAN"), 17 ("A wireless LAN card 10 containing a wireless LAN chip is attached to PC 100, thereby transmitting image signals and audio signals to projector 200 via the wireless LAN"), 19 ("[A] network IF 108 which is an interface for communicating with projector 200 via a LAN or the like"), FIG. 1 (reproduced below); *see also* Ex-1034, ¶¶90, 93.) As described above (*see* limitation 1(b)), the wireless LAN card/wireless modem device may be presented as a human interface device (*e.g.*, as suggested by Deforche), such that the

audio and display data may be said to be communicated via the human interface device. (*See*, *e.g.*, Ex-1030, ¶¶32-39, 52.)

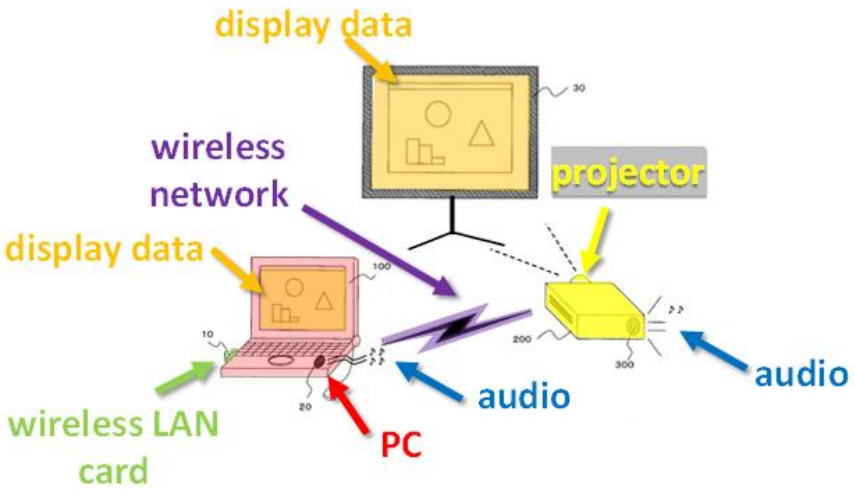

(Ex-1031, FIG. 1.)

e. Limitation 1(d): reading the audio data from the port

147. The combined teachings of Maeda and Deforche disclose and/or suggest this limitation. For example, a POSITA would have understood Maeda to discloses reading audio data from a port at the network IF 108 of the PC 100. (*See*, *e.g.*, Ex-1031, ¶¶15, 17, 19.) As discussed for limitation 1(a) above, data is required to be read from the PC's port in order for the wireless LAN card 10 to transmit audio data to the wireless LAN. Moreover, Meada (as modified by Deforche) suggests reading all data from a port/interface on the host PC to, for example, a wireless USB modem device. (*See*, *e.g.*, Ex-1030, ¶¶34-39.)

f. Limitation 1(e): connecting the processing device to a communications network via the transceiver

148. The combined teachings of Maeda and Deforche disclose and/or suggest this limitation. For example, Maeda discloses connecting the PC 100 to a communications network via the wireless LAN card 100. (*See, e.g.*, Ex-1031, ¶17 ("A wireless LAN card 10 containing a wireless LAN chip is attached to PC 100, thereby transmitting image signals and audio signals to projector 200 via the wireless LAN."); *see also* Ex-1005, ¶¶35, 39-42, 50-57, 61-62; Ex-1009, ¶¶40-41, 65, 68, 90, 165-167; Ex-1033 ¶70; Ex-1034 ¶¶14-15.) As described above (*see* limitation 1(a)), this connection may be achieved through the wireless LAN card's transceiver chip, or other well-known transceiver that enables two-way communication.

g. Limitation 1(f): display data and audio data being routed between the processing device and the communication network via the transceiver and further to a base node

149. The combined teachings of Maeda and Deforche disclose and/or suggest this limitation. For example, Maeda discloses that display data and audio data are routed between the PC and the communication network via the LAN card and further to a projector 200. (*See, e.g.*, Ex-1031, ¶17 ("This transmission system is a system in which a screen displayed on the display of PC 100 is transmitted from PC 100 to projector 200 and the screen received by projector 200 is projected onto a screen 30. A wireless LAN card 10 containing a wireless LAN chip is attached to

PC 100, thereby transmitting image signals and audio signals to projector 200 via the wireless LAN. The PC 100 also has a built-in speaker 20 that can play audio generated by the PC 100. The projector 200 is also equipped with a speaker 300, which can play audio when an audio signal is received from the PC 100.”).) As described above (*see* limitations 1(a), 1(c), and 1(e)), data routing is achieved through the wireless LAN card’s chip transceiver, or other well-known transceiver that enables two-way communication.

3. Claim 3: The method of claim 1, further comprising presenting the external peripheral device to the processing device as any of the following: a mass storage device; and a composite device

150. The teachings of Maeda and Deforche disclose and/or suggest the limitations of claim 3. For example, Deforche discloses as part of the approach discussed above, presenting a wireless modem peripheral device to a computer’s operating system as a USB mass storage device (UMS), such that the pre-installed mass storage device driver of the computer can setup communication with the peripheral device without the need to install special device drivers, or as a composite device, to first setup communication with the wireless modem device and then transfer data using its wireless capability. (*See, e.g.*, Ex-1030, ¶¶31 (“At this point, the USB modem presents itself as a USB Mass Storage Device (10)”), 33 (“The USB device can thus expose its USB interface in different ways: (1) A composite device

with USB HID and USM Mass Storage Unit (UMS) device with UMS and HID USB ID; (2) UMS device with 3G USB ID"), 37-46.)

151. Furthermore, Deforche also discloses presenting a wireless modem peripheral device to a computer's operating system as a composite device, such that the pre-installed device drivers for the different components of the composite device can communicate with these interfaces of the peripheral device independently and without the need to install special device drivers. (*See, e.g.*, Ex-1030, ¶33 ("A switching mechanism allows a ZeroFootprint device to present itself as a USB/HID+MSD device or USB modem device, depending on the availability of drivers in the system. The USB device can thus expose its USB interface in different ways: (1) A composite device with USB HID and USM Mass Storage Unit (UMS) device with UMS and HID USB ID; (2) UMS device with 3G USB ID").)

4. Claim 9

152. The combination of Maeda and Deforche disclose and/or suggest all the limitations of claim 9 for reasons similar to those discussed above for Claim 1. (*See* Section IX.B.2.)

a. Limitation 9(pre): A system for connecting a processing device to a communications network, the processing device having a memory, a display and an operating system and communication between processing device and a class of peripheral devices, the system comprising

153. The combination of Maeda and Deforche discloses and/or suggests this limitation for reasons similar to those discussed above for limitation 1(pre). (*See* Section IX.B.2.a.)

b. Limitation 9(a): means for coupling an external peripheral device physically to a port of the processing device, the external peripheral device having a transceiver and a connector configured to couple to the port of the processing device

154. The combination of Maeda and Deforche discloses and/or suggests this limitation for reasons similar to those discussed above for limitation 1(a). (*See* Section IX.B.2.b.)

c. Limitation 9(b): means for presenting the external peripheral device to the processing device as a human interface device

155. The combination of Maeda and Deforche discloses and/or suggests this limitation for reasons similar to those discussed above for limitation 1(b). (*See* Section IX.B.2.c.)

d. Limitation 9(c): means for at least one of display data communication and audio communication between the external peripheral device and the processing device via the human interface device

156. The combination of Maeda and Deforche discloses and/or suggests this limitation for reasons similar to those discussed above for limitation 1(b)-(c). (*See* Section IX.B.2.c-d.)

e. Limitation 9(d): wherein the external peripheral device is configured to connect the processing device to a communications network via the transceiver

157. The combination of Maeda and Deforche discloses and/or suggests this limitation for reasons similar to those discussed above for limitation 1(e). (*See* Section IX.B.2.f.)

f. Limitation 9(e): means for routing display data and audio data between the processing device and the communication network via the means for display data and audio data communication and the transceiver to a base node

158. The combination of Maeda and Deforche discloses and/or suggests this limitation for reasons similar to those discussed above for limitation 1(c), 1(f). (*See* Section IX.B.2.d & g.)

5. Claim 18

159. The combination of Maeda and Deforche disclose and/or suggest all the limitations of claim 18 for reasons similar to those discussed above for Claim 1. (*See* Section IX.B.2.)

a. Limitation 18(pre): A peripheral device for providing communication connectivity to a processing device which is provided with memory, a display and an operating system and for communication between the processing device and a class of peripheral device, the peripheral device comprising a connection configured to be physically coupled to a port of the processing device and the peripheral device being adapted to work with executable software code, said executable software code comprising:

160. The combination of Maeda and Deforche discloses and/or suggests this limitation for reasons similar to those discussed above for limitations 1(pre)-(a). (*See* Section IX.B.2.a-b.)

b. Limitation 18(a): a fourth software code for presenting the external peripheral device to the processing device as a human interface device

161. The combination of Maeda and Deforche discloses and/or suggests this limitation for reasons similar to those discussed above for limitation 1(b). (*See* Section IX.B.2.c.)

c. Limitation 18(b): a first software code portion for setting up, a means for at least one of display data communication and audio data communication between the peripheral device and the processing device via the human interface device

162. The combination of Maeda and Deforche discloses and/or suggests this limitation for reasons similar to those discussed above for limitation 1(c)-(d). (*See* Section IX.B.2.d-e.)

d. Limitation 18(c): a second software code portion for connecting the processing device to a communications network via a transceiver of the external peripheral device

163. The combination of Maeda and Deforche discloses and/or suggests this limitation for reasons similar to those discussed above for limitation 1(e). (*See* Section IX.B.2.f.)

e. Limitation 18(d): a third software code portion for routing the display data and the audio data between the processing device and the communication network via the transceiver to a base node.

164. The combination of Maeda and Deforche discloses and/or suggests this limitation for reasons similar to those discussed above for limitations 1(c)-(d), 1(f). (*See* Section IX.B.2.d-e & g.)

6. Claim 19

165. The combination of Maeda and Deforche disclose and/or suggest all the limitations of claim 19 for reasons similar to those discussed above for Claim 1. (*See* Section IX.B.2.)

a. Limitation 19(pre): A method for connecting a processing device to a communications network, the processing device having a memory, a display and an operating system, the method comprising

166. The combination of Maeda and Deforche discloses and/or suggests this limitation for reasons similar to those discussed above for limitation 1(pre). (*See* Section IX.B.2.a.)

b. Limitation 19(a): coupling an external peripheral device physically to a port of the processing device

167. The combination of Maeda and Deforche disclose and/or suggest this limitation for reasons similar to those discussed above for limitation 1(a). (*See* Section IX.B.2.b.)

c. Limitation 19(b): wherein the peripheral device comprises a wireless transceiver and a connector, said connector configured to couple to the port of the processing device

168. The combination of Maeda and Deforche discloses and/or suggests this limitation for reasons similar to those discussed above for limitation 1(a). (*See* Section IX.B.2.b.)

d. Limitation 19(c): presenting the external peripheral device to the processing device as a human interface device

169. The combination of Maeda and Deforche discloses and/or suggests this limitation for reasons similar to those discussed above for limitation 1(b). (*See* Section IX.B.2.c.)

e. Limitation 19(d): setting up one of an audio communication between the peripheral device and the processing device and a display data communication between the peripheral device and the processing device via the human interface device

170. The combination of Maeda and Deforche disclose and/or suggest this limitation for reasons similar to those discussed above for limitation 1(c)-(d). (*See* Section IX.B.2.d-e.) Further, a POSITA would have understood that when wireless LAN card 10 is attached to PC 100, several components of PC 100 set up communication with the wireless LAN card/wireless modem device. For example, an audio capture unit 128 and PC communication unit 127 provide communication of audio data from the PC 100 to the wireless LAN card 10 for transmission to the projector 200 via the wireless LAN. (*See*, *e.g.*, Ex-1031, ¶¶22, 29, 30.) In addition, an image capture unit 123 and the PC communication unit 127 provide communication of display data from the PC 100 to the wireless LAN card 10 for transmission to the projector 200 via the wireless LAN. (*See*, *e.g.*, Ex-1031, ¶¶22, 23, 26, 29, 30.)

f. Limitation 19(e): the peripheral device being configured to connect the processing device to a communications network via the wireless transceiver

171. The combination of Maeda and Deforche discloses and/or suggests this limitation for reasons similar to those discussed above for limitation 1(e). (*See* Section IX.B.2.f.)

g. Limitation 19(f): routing audio data from the processing device to the wireless transceiver via the connector of the peripheral device and the audio communication

172. The combination of Maeda and Deforche discloses and/or suggests this limitation for reasons similar to those discussed above for limitation 1(c)-(d), 1(f). (*See* Section IX.B.2d-e & g.) As discussed, Maeda's PC 100 transmits image signals and audio signals to the projector 200. The transmitted signals include signals from an image capture unit 123 that captures the image signal and a sound capture unit 128 that captures the audio signal. (Ex-1031, ¶¶26 ("The image capture unit 123 is a processing unit that receives a capture instruction from the control unit 121 and captures the screen generated by the screen generation unit 122, and is realized by the graphics chip 104, the main memory 102, and the like"), 28 ("The audio capture unit 128 is a processing unit that receives a capture instruction from the control unit 121 and captures the audio generated by the audio generation unit 124, and is realized by the audio chip 114, the main memory 102, and the like"), 29, 30.) The

captured audio signal, which includes audio data, is routed from the PC 100 through the wireless LAN card 10 to be transmitted for audio output at the projector 200. (*See*, *e.g.*, Ex-1031, ¶17 ("A wireless LAN card 10 containing a wireless LAN chip is attached to PC 100, thereby transmitting image signals and audio signals to projector 200 via the wireless LAN.").)

h. Limitation 19(g): routing display data from the processing device to the wireless transceiver via the connector of the peripheral device and the display data communication

173. The combination of Maeda and Deforche discloses and/or suggests this limitation for reasons similar to those discussed above for limitations 1(c)-(d), 1(f). (*See* Section IX.B.2.d-e & g.) As discussed, a POSITA would have understood Meada's wireless LAN card 10 to include a transceiver (as a means to transmit and receive data) and a connector (to electrically couple the card 10 to the PC 100). Moreover, a POSITA would have been motivated to implement such features as conventional structures to perform those functions. (*See* Section IX.B.1.) Also, as described above, Maeda's PC 100 transmits both image signals and audio signals via wireless LAN card 10. PC 100 includes an image capture unit 123 that captures the image signal and a sound capture unit 128 that captures the audio signal. (Ex-1031, ¶¶26 ("The image capture unit 123 is a processing unit that receives a capture instruction from the control unit 121 and captures the screen generated by the screen

generation unit 122, and is realized by the graphics chip 104, the main memory 102, and the like"), 28 ("The audio capture unit 128 is a processing unit that receives a capture instruction from the control unit 121 and captures the audio generated by the audio generation unit 124, and is realized by the audio chip 114, the main memory 102, and the like"), 29, 30.) The captured video signal, which includes display data, is routed from the PC 100 through the wireless LAN card 10 for display at the projector 200. (*See*, *e.g.*, Ex-1031, ¶17 ("A wireless LAN card 10 containing a wireless LAN chip is attached to PC 100, thereby transmitting image signals and audio signals to projector 200 via the wireless LAN.").)

i. Limitation 19(h): routing the display data and the audio data from the wireless transceiver of the peripheral device to a base node over the communications network via at least one channel created between the external peripheral device to the base node

174. The combination of Maeda and Deforche discloses and/or suggests this limitation for reasons similar to those discussed above for limitation 1(f). (*See* Section IX.B.2.g.) Further, the combination of Maeda and Deforche discloses and/or suggests routing the display data and the audio data from the wireless transceiver of the peripheral device to a base node over the communications network via at least one channel created between the external peripheral device to the base node. (*See*, *e.g.*, Ex-1031, ¶43-44 (describing an exclusive mode connection for audio and video

transmission).) Further, Meada discloses that "images can be transmitted using TCP (Transmission Control Protocol), while audio can be transmitted using UDP (User Datagram Protocol)." (Ex-1031, ¶57.) A POSITA would have understood these conventional protocols utilize transmission channels to transfer their respective data. Moreover, in combination with Deforche (an implementation of a wireless modem that uses its HID identification for wireless transmission) suggests the use of transmission channels to data transmission as was conventional in the art. (*See* Ex-1030, ¶38.)

X. CONCLUSION

175. My opinions are based upon the information that I have considered to date. I am unaware of any evidence of secondary considerations with respect to the '237 patent that would render any of the asserted claims non-obvious. I reserve the right, however, to supplement my opinions in the future to respond to any arguments raised by the owner of the '237 patent and to consider new information that becomes available to me.

176. I declare that all statements made herein of my knowledge are true, and that all statements made on information and belief are believed to be true, and that these statements were made with the knowledge that willful false statements and the

like so made are punishable by fine or imprisonment, or both, under Section 1001 of Title 18 of the United States Code.

By: Kevin C. Almeroth
Kevin C. Almeroth, Ph.D.

Date: September 12, 2024