UNITED STATES PATENT AND TRADEMARK OFFICE

BEFORE THE PATENT TRIAL AND APPEAL BOARD

YEALINK (USA) NETWORK TECHNOLOGY CO., LTD., and
YEALINK NETWORK TECHNOLOGY CO., LTD.
Petitioners,

v.

BARCO N.V.
Patent Owner

U.S. Patent No. 11,966,346
IPR2025-00597

**DECLARATION OF KEVIN C. ALMEROTH, PH.D.,
IN SUPPORT OF PETITION FOR *INTER PARTES* REVIEW
OF U.S. PATENT NO. 11,966,346**

YEALINK EX. 1002

BARCO EXHIBIT 2030
Yealink v. Barco
IPR2024-01438

TABLE OF CONTENTS

I. INTRODUCTION 4
II. QUALIFICATIONS / PROFESSIONAL BACKGROUND 5
III. MATERIALS REVIEWED 18
IV. LEVEL OF ORDINARY SKILL IN THE ART 21
V. BACKGROUND OF THE TECHNOLOGY 22
VI. OVERVIEW OF THE '346 PATENT 41
A. Prior Art Techniques Acknowledged by the '346 patent 41
B. The Purported Invention 42
C. Prosecution History 43
VII. CLAIM CONSTRUCTION 48
A. "*functional device*" (claims 1, 7, 11, 16, 19) 52
B. "*to present the at least one functional device to the operating system of the processing device as a virtual functional device*" (Claims 1, 7, 9-11, 16, 18-20) 52
C. "*screen scraping*" (Claims 4, 14) 54
D. "*means for encoding, optionally encrypting*" (Claims 8, 17) 54
E. "*providing simulations or translations, as required, to allow interaction between the first display device and the processing device*" (Claims 1, 11) 55
F. "*configured to provide data transformations based on a type of functional data from the at least one functional device to the processing device*" (Claims 1, 11) 56
G. "*third-party software for a Unified Communication call*" "*unified communication*" (Claims 1, 9, 11, 18) 56
H. "*at least one fixed or a configurable endpoint of the virtual functional device*" (Claims 10, 20) 57
VIII. OVERVIEW OF THE PRIOR ART 59
A. Beel (Ex-1005) 59
B. Dinka (Ex-1006) 60

C. Kaplan (Ex-1008) 61

D. Van de Laar (Ex-1007) 63

E. Christison (Ex-1011) 65

F. Applicant-Admitted Prior Art ("AAPA") 66

IX. THE PRIOR ART DISCLOSES AND/OR SUGGESTS THE RECITED FEATURES OF CLAIMS 1-22 OF THE '346 PATENT 67

A. Claims 1-22 of the '346 Patent Are Unpatentable as Obvious Over Beel in view Dinka, AAPA, and Optionally in View of Christison 67

B. Claims 1-22 of the '346 Patent Are Unpatentable as Obvious Over Van de Laar in view of Kaplan, AAPA, and Optionally Christison 99

X. CONCLUSION 132

I, Kevin C. Almeroth Ph.D., declare as follows:

I. INTRODUCTION

1. I have been retained by Yealink (USA) Network Technology Co., Ltd. and Yealink Network Technology Co., Ltd. (collectively, "Petitioners") as an independent expert consultant in this proceeding before the United States Patent and Trademark Office ("PTO") regarding U.S. Patent No. 11,966,346 ("the '346 patent") (Ex-1001).

2. My name is Kevin C. Almeroth and I am a Professor Emeritus of Computer Science at the University of California, Santa Barbara. I have prepared this declaration as an expert witness on behalf of Petitioners. In this declaration, I will give my opinion as to whether claims 1-22 of the '346 patent are unpatentable. I also provide herein the technical bases for these opinions, as appropriate.

3. For my efforts in connection with the preparation of this declaration, I have been compensated at my usual and customary rate for this type of consulting activity. My compensation is in no way contingent on the outcome of these or any other proceedings.

4. I have been asked to consider whether certain references disclose or suggest the features recited in claims 1-22 of the '346 patent. My opinions are set forth below.

II. QUALIFICATIONS / PROFESSIONAL BACKGROUND

5. I am currently a Professor Emeritus in the Department of Computer Science at the University of California, Santa Barbara (UCSB). All of my opinions stated in this declaration are based on my own personal knowledge and professional judgment. In forming my opinions, I have relied on my knowledge and experience in designing, developing, researching, and teaching regarding computer networks and protocols, wireless networking, multicast communication, large-scale multimedia systems, and mobile applications.

6. I am over 18 years of age and, if I am called upon to do so, I would be competent to testify as to the matters set forth herein. I understand that a copy of my current curriculum vitae, which details my education and professional and academic experience, is being submitted by Petitioner as Exhibit 1003. The following provides an overview of some of my experience that is relevant to the matters set forth in this declaration.

7. While at UCSB, I have held faculty appointments and was a founding member of the Computer Engineering (CE) Program, Media Arts and Technology (MAT) Program, and the Technology Management Program (TMP). I have also served as the Associate Director of the Center for Information Technology and

Society (CITS) from 1999 to 2012. I have been a faculty member at UCSB since July 1997.

8. I hold three degrees from the Georgia Institute of Technology: (1) a Bachelor of Science degree in Information and Computer Science (with minors in Economics, Technical Communication, and American Literature) earned in June 1992; (2) a Master of Science degree in Computer Science (with specialization in Networking and Systems) earned in June 1994; and (3) a Doctor of Philosophy (Ph.D.) degree in Computer Science (Dissertation Title: Networking and System Support for the Efficient, Scalable Delivery of Services in Interactive Multimedia System, minor in Telecommunications Public Policy) earned in June 1997. During my education, I took a wide variety of courses as demonstrated by my minors. My undergraduate degree also included a number of courses more typical of a degree in electrical engineering including digital logic, signal processing, and telecommunications theory.

9. One of the major concentrations of my research over the past 30+ years has been the delivery of multimedia content and data between computing devices, including through various network architectures. In my research, I have studied large-scale content delivery systems, and the use of servers located in a variety of geographic locations to provide scalable delivery to hundreds or thousands of users

simultaneously. I have also studied smaller-scale content delivery systems in which content is exchanged between individual computers and portable devices. My work has emphasized the exchange of content more efficiently across computer networks, including the scalable delivery of content to many users, mobile computing, satellite networking, delivering content to mobile devices, and network support for data delivery in wireless networks.

10. In 1992, the initial focus of my research was on the provision of interactive functions (e.g., VCR-style functions like pause, rewind, and fast-forward) for near video-on-demand systems in cable systems; in particular, how to aggregate requests for movies at a cable head-end and then how to satisfy a multitude of requests using one audio/video stream broadcast to multiple receivers simultaneously. This research has continually evolved and resulted in the development of techniques to scale the delivery of on-demand content, including audio, video, web documents, and other types of data, through the Internet and over other types of networks, including over cable systems, broadband telephone lines, and satellite links.

11. An important component of my research has been investigating the challenges of communicating multimedia content, including video, between computers and across networks including the Internet. Although the early Internet

was used mostly for text-based, non-real time applications, the interest in sharing multimedia content, such as video, quickly developed. Multimedia-based applications ranged from downloading content to a device to streaming multimedia content to be instantly used. One of the challenges was that multimedia content is typically larger than text-only content, but there are also opportunities to use different delivery techniques since multimedia content is more resilient to errors. I have worked on a variety of research problems and used a number of systems that were developed to deliver multimedia content to users. One content-delivery method I have researched is the one-to-many communication facility called "multicast," first deployed as the Multicast Backbone, a virtual overlay network supporting one-to-many communication. Multicasting is one technique that can be used on the Internet to provide streaming media support for complex applications like video-on-demand, distance learning, distributed collaboration, distributed games, and large-scale wireless communication. The delivery of media through multicasting often involves using Internet infrastructure, devices and protocols, including protocols for routing and TCP/IP.

12. Starting in 1997, I worked on a project to integrate the streaming media capabilities of the Internet together with the interactivity of the web. I developed a project called the Interactive Multimedia Jukebox (IMJ). Users would visit a web

page and select content to view. The content would then be scheduled on one of a number of channels, including delivery to students in Georgia Tech dorms delivered via the campus cable plant. The content of each channel was delivered using multicast communication.

13. In the IMJ, the number of channels varied depending on the capabilities of the server including the available bandwidth of its connection to the Internet. If one of the channels was idle, the requesting user would be able to watch their selection immediately. If all channels were streaming previously selected content, the user's selection would be queued on the channel with the shortest wait time. In the meantime, the user would see what content was currently playing on other channels, and because of the use of multicast, would be able to join one of the existing channels and watch the content at the point it was currently being transmitted.

14. The IMJ service combined the interactivity of the web with the streaming capabilities of the Internet to create a jukebox-like service. It supported true Video-on-Demand when capacity allowed, but scaled to any number of users based on queuing requested programs. As part of the project, we obtained permission from Turner Broadcasting to transmit cartoons and other short-subject content. We also connected the IMJ into the Georgia Tech campus cable television

network so that students in their dorms could use the web to request content and then view that content on one of the campus's public access channels.

15. More recently, I have also studied issues concerning how users choose content, especially when considering the price of that content. My research has examined how dynamic content pricing can be used to control system load. By raising prices when systems start to become overloaded (*i.e.*, when all available resources are fully utilized) and reducing prices when system capacity is readily available, users' capacity to pay as well as their willingness can be used as factors in stabilizing the response time of a system. This capability is particularly useful in systems where content is downloaded or streamed on-demand to users.

16. As a parallel research theme, starting in 1997, I began researching issues related to wireless devices and sensors. In particular, I was interested in showing how to provide greater communication capability to "lightweight devices," *i.e.*, small form-factor, resource-constrained (*e.g.*, CPU, memory, networking, and power) devices. Starting in 1998, I published several papers on my work to develop a flexible, lightweight, battery-aware network protocol stack. The lightweight protocols we envisioned were similar in nature to protocols like Bluetooth, Universal Plug and Play (UPnP) and Digital Living Network Alliance (DLNA).

17. From this initial work, I have made wireless networking—including ad hoc, mesh networks and wireless devices—one of the major themes of my research. My work in wireless networks spans the protocol stack from applications through to the encoding and exchange of data at the data link and physical layers.

18. At the application layer, even before the large-scale "app stores" were available, my research looked at building, installing, and using apps for a variety of purposes, from network monitoring to support for traditional computer-based applications (*e.g.,* content retrieval) to new applications enabled by ubiquitous, mobile devices. For example, my research has looked at developing applications for virtually exchanging and tracking "coupons" through "opportunistic contact" among mobile wireless devices (*i.e.,* communication among devices moving into communication range with each other). In many of the courses I have taught there is a project component. Through these projects I have supervised numerous efforts to develop new "apps" for download and use across a variety of mobile platforms.

19. Toward the middle of the protocol stack, my research has also looked to build wireless infrastructure support to enable communication among a set of mobile devices unaided by any other kind of network infrastructure. These kinds of networks are useful either in challenged network environments (e.g., when a natural disaster has destroyed existing infrastructure) or when suitable support for network

communication never existed. The deployment of such networks (or even the use of traditional network support) are critical to support services like disaster relief, catastrophic event coordination, and emergency services deployment.

20. Yet another theme of my research has been monitoring wireless networks, in particular different variants of IEEE 802.11 compliant networks, to (1) understand the operation of the various protocols used in real-world deployments, (2) use these measurements to characterize use of the networks and identify protocol limitations and weaknesses, and (3) propose and evaluate solutions to these problems. I have successfully used monitoring techniques to study wireless data link layer protocol operation and to improve performance by enhancing the operation of such protocols. For wireless protocols, this research includes functions like network acquisition and channel bonding.

21. One theme in my wireless network research has been cross-layer solutions and innovations. As mentioned above, with greater wireless device use and network support, we envisioned new application paradigms and services, for example, when mobile devices come into contact with each other. Instead of relying on existing infrastructure to relay communication, mobile devices are able to discover each other and communicate directly. Other examples include discovering and using location information to enhance users' experiences. Network support and

novel applications span the use of a variety of network architectures supporting users on foot, in vehicles, and across varying terrains and environments. Finally, we studied how communication efficiency can be supported through intelligent handoffs as well as location and movement prediction.

22. Protecting networks, including their operation and content, has been an underlying theme of my research almost since the beginning of my research career. Since 2000, I have been involved in several projects that specifically address security, network protection, and firewalls. After significant background work, a team on which I was a member successfully submitted a $4.3M grant proposal to the Army Research Office (ARO) at the Department of Defense to propose and develop a high-speed intrusion detection system. Key aspects of the system included associating streams of packets and analyzing them for viruses and other malware. Once the grant was awarded, we spent several years developing and meeting the milestones of the project. Several of my students worked on related projects and published papers on topics ranging from intrusion detection to developing advanced techniques to be incorporated into firewalls. I have also used firewalls, including their associated malware detection features, in developing techniques for the classroom to ensure that students are not distracted by online content.

23. My recent work ties some of the various threads of my past research together. I have investigated content delivery in online social networks and proposed reputation management systems in large-scale social networks and marketplaces. On the content delivery side, I have looked at issues of caching and cache placement, especially when content is shared and the cache has geographical relevance. We were able to show that effective caching strategies can greatly improve performance and reduce deployment costs.

24. As an important component of my research program, I have been involved in the development of academic research into available technology in the marketplace. One aspect of this work is my involvement in the Internet Engineering Task Force (IETF). The IETF is a large and open international community of network designers, operators, vendors, and researchers concerned with the evolution of Internet architecture and the smooth operation of the Internet. I have been involved in various IETF groups including content delivery-related working groups like the Audio Video Transport (AVT) group, the MBone Deployment (MBONED) group, Source Specific Multicast (SSM) group, the Inter-Domain Multicast Routing (IDMR) group, the Reliable Multicast Transport (RMT) group, the Protocol Independent Multicast (PIM) group, etc. I have also served as a member of the Multicast Directorate (MADDOGS), which oversaw the standardization of all things

related to multicast in the IETF. Finally, I was the Chair of the Internet2 Multicast Working Group for seven years.

25. My involvement in the research community extends to leadership positions for several academic journals and conferences. I am the co-chair of the Steering Committee for the ACM Network and System Support for Digital Audio and Video (NOSSDAV) workshop and on the Steering Committees for the International Conference on Network Protocols (ICNP), ACM Sigcomm Workshop on Challenged Networks (CHANTS), and IEEE Global Internet (GI) Symposium. I have served or am serving on the Editorial Boards of IEEE/ACM Transactions on Networking, IEEE Transactions on Mobile Computing, IEEE Network, ACM Computers in Entertainment, AACE Journal of Interactive Learning Research (JILR), and ACM Computer Communications Review. I have co-chaired a number of conferences and workshops including the IEEE International Conference on Network Protocols (ICNP), IEEE Conference on Sensor, Mesh and Ad Hoc Communications and Networks (SECON), International Conference on Communication Systems and Networks (COMSNETS), IFIP/IEEE International Conference on Management of Multimedia Networks and Services (MMNS), the International Workshop On Wireless Network Measurement (WiNMee), ACM Sigcomm Workshop on Challenged Networks (CHANTS), the Network Group

Communication (NGC) workshop, and the Global Internet Symposium, and I have served on the program committees for numerous conferences.

26. Furthermore, in the courses I taught at UCSB, a significant portion of my curriculum covered aspects of the Internet and network communication including the physical and data link layers of the Open System Interconnect (OSI) protocol stack, and standardized protocols for communicating across a variety of physical media such as cable systems, telephone lines, wireless, and high-speed Local Area Networks (LANs). The courses I have taught also cover most major topics in Internet communication, including data communication, multimedia encoding, and mobile application design. My research and courses have covered a range of physical infrastructures for delivering content over networks, including cable, Integrated Services Digital Network (ISDN), Ethernet, Asynchronous Transfer Mode (ATM), fiber, and Digital Subscriber Line (DSL). For a complete list of courses I have taught, see my curriculum vitae (CV) (Ex-1003).

27. In addition, I co-founded a technology company called Santa Barbara Labs that was working under a sub-contract from the U.S. Air Force to develop very accurate emulation systems for the military's next generation internetwork. Santa Barbara Labs' focus was in developing an emulation platform to test the performance characteristics of the network architecture in the variety of

environments in which it was expected to operate, and, in particular, for network services including IPv6, multicast, Quality of Service (QoS), satellite-based communication, and security. Applications for this emulation program included communication of a variety of multimedia-based services, including video conferencing and video-on-demand.

28. In addition to having co-founded a technology company myself, I have worked for, consulted with, and collaborated with companies for nearly 30 years. These companies range from well-established companies to start-ups and include IBM, Hitachi Telecom, Turner Broadcasting System (TBS), Bell South, Digital Fountain, RealNetworks, Intel Research, Cisco Systems, and Lockheed Martin.

29. Through my graduate education, leadership with CITS, involvement in TMP, role in the development of the Internet2 infrastructure, and consulting with ISPs, I have gained a strong understanding in the role of the Internet in our society and the challenges of deploying large-scale production networking infrastructure. CITS, since its inception, has looked at the role of the Internet in society, including how the evolution of technology has created communication opportunities and challenges, including, for example through disruptive technologies like P2P. TMP looks to focus on non-purely technical issues, including, for example, state-of-the-art business methods, strategies for successful technology commercialization, new

venture creation, and best practices for fostering innovation. Through my industry collaborations and Internet2 work, I have developed significant experience in the challenges of deploying, monitoring, managing, and scaling communication infrastructure to support evolving Internet services like streaming media, conferencing, content exchange, social networking, and e-commerce.

30. I am a Member of the Association of Computing Machinery (ACM) and a Fellow of the Institute of Electrical and Electronics Engineers (IEEE).

III. MATERIALS REVIEWED

31. The opinions contained in this Declaration are based on the documents I reviewed, my professional judgment, as well as my education, experience, and knowledge regarding, for example, electronic meeting tools, methods of displaying and transmitting audiovisual media content, audiovisual display systems, wireless network communication, user interfaces, plug-and-play architectures, and video conferencing applications.

32. In forming my opinions expressed in this Declaration, I reviewed the following materials and information:

EXHIBIT	DESCRIPTION
Ex-1001	U.S. Patent No. 11,966,346 ("'346 patent")
Ex-1002	Declaration of Kevin C. Almeroth, Ph.D.
Ex-1003	Curriculum Vitae of Kevin C. Almeroth, Ph.D.
Ex-1004	File History of U.S. Patent No. 11,966,346

Ex-1005	U.S. Publication No. 2015/0169477 ("Beel")
Ex-1006	U.S. Patent No. 8,369,498 ("Dinka")
Ex-1007	U.S. Publication No. 2016/0014172 ("Van de Laar")
Ex-1008	U.S. Publication No. 2010/0295994 ("Kaplan")
Ex-1009	Skype Webpage (Archived Sept. 14, 2012) (https://web.archive.org/web/20120914232239/http://www.skype.com/intl/en-us/home) (accessed Feb. 3, 2025)
Ex-1010	USB Endpoints and Their Pipes - Windows drivers _ Microsoft Learn.pdf (https://learn.microsoft.com/en-us/windows-hardware/drivers/usbcon/usb-endpoints-and-their-pipes) (accessed Feb. 3, 2025)
Ex-1011	U.S. Patent No. 7,761,627 ("Christison")
Ex-1012	EP3732827B1 ("Renard")
Ex-1013	Skype Webpage (Archived Nov. 28, 2015) (https://web.archive.org/web/20151128100316/http://www.skype.com/en/) (accessed Feb. 3, 2025)
Ex-1014	U.S. Patent Application Publication No. 2002/0196378 ("Slobodin")
Ex-1015	U.S. Patent Application Publication No. 2008/0074560 ("Ichieda")
Ex-1016	English Translation of JP Patent Application Publication No. 2007-208606 ("Maeda")
Ex-1017	JP Patent Application Publication No. 2007-208606
Ex-1018	Certification for English Translation of JP Patent Application Publication No. 2007-208606
Ex-1019	U.S. Patent Application Publication No. 2002/0174254 ("Kita")
Ex-1020	U.S. Patent Application Publication No. 2005/0210390 ("Ono")
Ex-1021	EP Patent Application Publication No. 2107463 ("Deforche")
Ex-1022	U.S. Patent Application Publication No. 2009/0172219 ("Mardiks")
Ex-1023	English Translation of Japanese Patent Application Publication No. 2008-165007 ("Uchida")
Ex-1024	JP Patent Application Publication No. 2008-165007
Ex-1025	Certification for English Translation of Japanese Patent Application Publication No. 2008-165007

Ex-1026	Imation Wireless Projection Link User Guide
Ex-1027	EZAir Press Release, "EZAir Wireless PC to TV Solutions Now Available Across Europe," March 16, 2011
Ex-1028	Warpia Product Brief, "Wireless USB PC to TV Audio/Video Display Adapter," 2009
Ex-1029	Q-Waves Product Overview, "Quicklink TV," November 2010
Ex-1030	IOGear Installation Guide, "Wireless USB to VGA Kit," 2008
Ex-1031	Dictionary definition of "Communication Protocol"
Ex-1032	WIPO Publication No. WO 2012/128972 ("Scragg")
Ex-1033	Wi-Fi Security Webpage (Archived Aug. 16, 2017) (https://web.archive.org/web/20170816134219/http://www.wi-fi.org/discover-wi-fi/security) (accessed Feb. 3, 2025)
Ex-1034	Dictionary definition of "transform"
Ex-1035	What is screen scraping? By Alexander Gillis (https://www.techtarget.com/searchdatacenter/definition/screen-scraping) (accessed Feb. 10, 2025)

33. I also reviewed any other materials I refer to in this Declaration in support of my opinions.

34. My opinions contained in this declaration are based on the documents I reviewed and my knowledge and professional judgment. My opinions have also been guided by my appreciation of how a person of ordinary skill in the art ("POSA") would have understood the state of the art, the teachings of the prior art, and the claim terms and the specification of the '346 patent at the time of the alleged invention. My opinions reflect how a POSA (which I have described below) would have understood the '346 patent, the prior art, the knowledge of a POSA and the state of the art at the time of the alleged invention. I have been asked to initially

consider that the time of the alleged invention of the ’346 patent is around December 29, 2017 (the earliest date to which the ’346 patent claims the benefit of priority). However, even if a modestly earlier or later date were selected it would not alter my opinions.

35. Based on my experience and expertise, it is my opinion that the prior art discloses and/or suggests all the features recited in challenged claims 1-22 of the ’346 patent, as I discuss in detail below.

IV. LEVEL OF ORDINARY SKILL IN THE ART

36. In determining the skills of a hypothetical POSA of the ’346 patent at the time of the claimed invention, I considered several things, including various prior art techniques for screen scraping, wireless transmission of media content, wireless networking, user input/control, peripheral device interfaces, and device drivers. I also considered the type of problems that such techniques gave rise to and the rapidity with which innovations were made. I also considered the sophistication of the technologies involved and the educational background and experience of those actively working in the field.

37. For the purposes of my analysis, I have been asked to assume that a POSA in the field of art of the ’346 patent would have had at least a Master’s Degree in Electrical Engineering with at least five years of work experience in computer

science and embedded systems, or a Master's Degree in Computer Science with at least five years of work experience in electrical and computer engineering and embedded systems. Additional educational experience could substitute for some of the work experience. My opinions below have taken that into account and reflect that level of skill in determining the content of the prior art and what it would have suggested to a POSA.

V. BACKGROUND OF THE TECHNOLOGY

38. At the time of the alleged invention, media sharing between electronic devices was well established and used in an increasing variety of applications to share media data between devices. In the decades before the alleged invention, a wide array of electronic tools were developed to facilitate meetings and share content among individuals, particularly in business and educational settings. As acknowledged by the '346 patent, there has been "an explosion" of such tools by the time of the alleged invention. Ex-1001, 1:12-23. By the 2000s, there was already "widespread acceptance of using computers to facilitate group communications." Ex-1014, ¶4.

39. The oldest solutions involved wired connections between electronic devices. As wireless networking techniques became more common, wireless applications to electronic tools became prevalent. Indeed, by the time of the alleged

invention in late 2017, acknowledged by the '346 patent and discussed in more detail below, wireless networks were commonplace and widespread from classrooms to boardrooms.

40. Wireless media sharing arose, in part, from the recognition that sharing media content from one device to one or more separate devices (in settings such as a meeting, presentation, *etc*.) using physical cable connections presented certain physical limitations. For example, one limitation with physical cable connections was the case in which multiple presenters wish to perform presentations while taking turns using respective personal computers (PCs). Ex-1015, ¶4; *see also* Ex-1016[1], ¶3 (recognizing the limitation of physical cable connections in meetings requires physically reconnecting each electronic device to share media on separate electronic devices). By designing systems utilizing wireless communication, between a media device (*i.e.*, computer) and a display device (*i.e.*, a second computer, projector, or similar device), "the cable can be prevented from becoming an obstacle." (*Id.*)

[1] This is the English Translation (Ex-1016) to JP Patent Application Publication No. 2007-208606 (Ex-1017). All citations are to the English Translation (Ex-1016). Ex-1018 is the corresponding certificate of certified translation.

41. Techniques developed for wirelessly sharing media content included sharing content displayed on a laptop computer or other portable electronic device with another, separate display, for example, in a conference room. Although early on bandwidth of the wireless systems was a potential issue, to address this problem, US Patent Application Publication No. 2002/0196378 ("Slobodin") proposed a method and apparatus for wireless transmission of "screen scraped" images to a projector to reduce the amount of transmission bandwidth. Ex-1014, Title, Abstract, ¶¶12-14. As shown in FIG. 1 of Slobodin (reproduced below), an image-generating device 110 (*e.g.*, a laptop computer) generates a digital image on a display device 111 that is transmitted over a wireless link 120 to a remote presentation projector 130 for projection 145 by a presenter 150. Ex-1014, ¶33. Screen scraping was used to capture display data that was then transmitted to the projector. Ex-1014, ¶¶12-14. The '346 patent borrows this same screen scraping technique from Slobodin. *See* Ex-1001, 8:22-26.

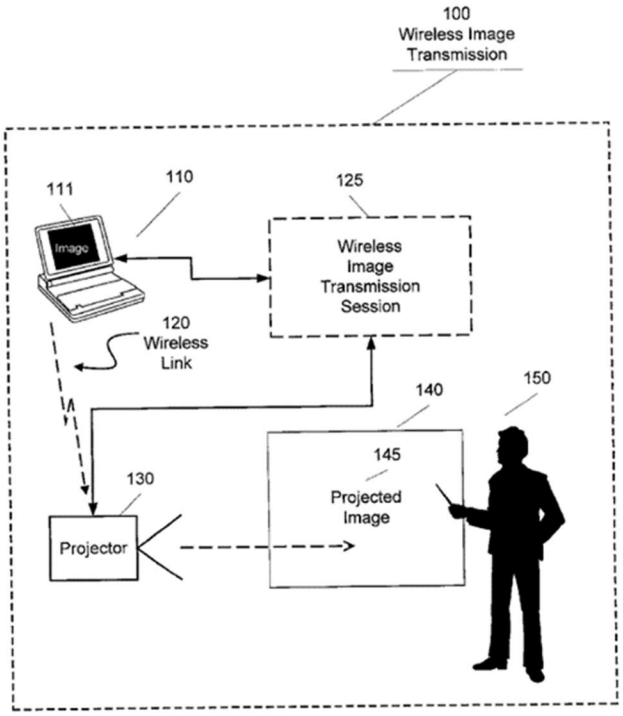

Ex-1014, FIG. 1.

42. As wireless networking technology progressed, focus shifted to making the tools more user-friendly and pluralistic. For example, efforts focused on making it easier for multiple users to establish network connections to implement wireless communication for image sharing. *See, e.g.*, Ex-1019, ¶¶1-8. U.S. Patent Application Publication No. 2002/0174254 ("Kita") (Ex-1019) describes a system in which network interface cards were preconfigured to connect to a wireless LAN, such that multiple computers 11 could be wirelessly connected to a projector 16 by merely inserting one of these interface cards 11 without participants needing to configure a network connection. See, e.g., Ex-1019, ¶¶14-17, FIGS. 3 and 18, reproduced below.

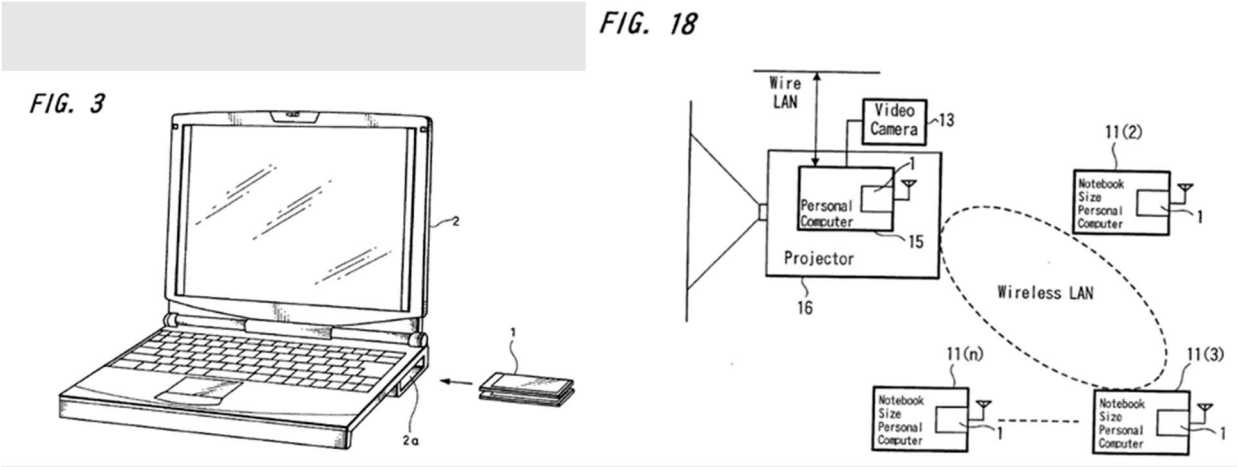

Ex-1019, FIGs. 3, 18.

43. During the 2000s, wireless technology shifted from wireless LAN cards, as described by Kita, to the increasingly more ubiquitous USB standard, which stands for Universal Bus Standard. A range of plug-and-play USB-type devices emerged for sharing both image and audio. For example, U.S. Patent Application Publication No. 2005/0210390 ("Ono") proposed the use of USB-type "communication modules" to wirelessly connect an image projector with multiple "information terminal apparatuses," depicted below as laptop personal computers. Ex-1020, ¶¶36-39. The communications modules plug into a USB port of the information terminal apparatuses and wirelessly transmit images via a wireless network from the laptop display to a corresponding wireless connection module coupled to the image projector. Ex-1020, ¶¶36-39, 54. Further, it was already taught in the prior art to use pre-installed drivers to operate a standard class of USB computer peripheral devices such as human interface devices (HID). *See* Ex-1021,

¶10; *see additionally*, Ex-1022, ¶3. In fact, "HID and MSD [mass storage device] drivers [were] known per se in the art." Ex-1021, ¶10.

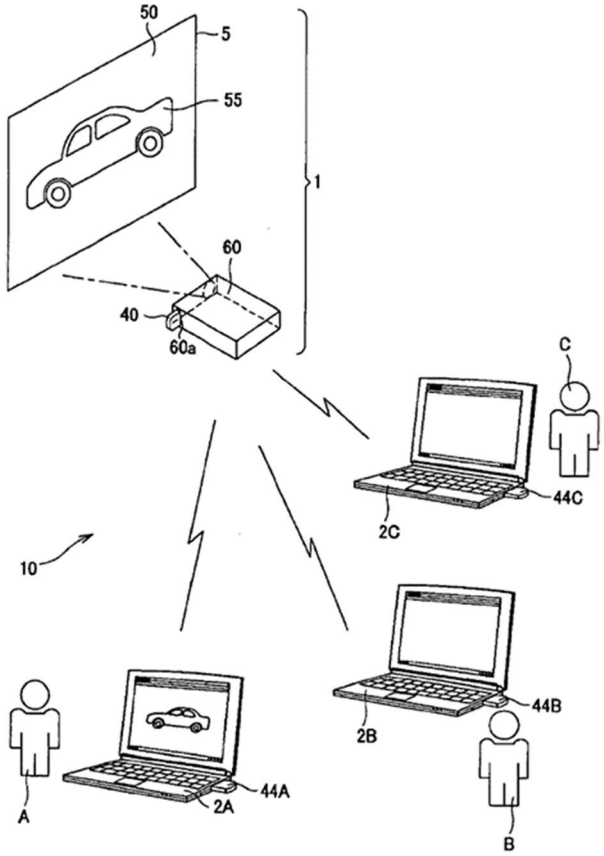

Ex-1020, FIG. 1.

44. By the priority date of the '346 patent, a POSA would have understood that the USB protocol had become widely accepted as a standard for connecting devices and/or sharing data between devices. A POSA would have further understood that USB devices must implement and adhere to the USB standard for compatibility across USB devices or devices compatible with USB devices.

45. Specifically, USB utilizes "endpoints." As discussed in the Universal Serial Bus Specification, Revision 2.0, an "endpoint is a uniquely identifiable portion of a USB device that is the terminus of a communication flow between the host and device. Each USB logical device is composed of a collection of independent endpoints." Universal Serial Bus Specification, Revision 2.0, pg. 33 (April 27, 2000) (last accessed Feb. 3, 2025) (http://www.poweredusb.org/pdf/usb20.pdf). Essentially, data flows through the endpoints of a USB device from one data source/sink (*i.e.*, the USB device) to another data source/sink (*i.e.*, the host). Hence, data can be sent to or from an endpoint, and each end of the communication channel between connected USB devices has its own endpoint for the data to be sent to or from.

46. A USB functional device can have multiple endpoints, *i.e.*, the client software and the firmware on the device can exchange multiple separate streams of data. Endpoint zero is reserved on each device for control communication with the USB system. USB devices can have additional endpoints as required to implement their functions. *Id.*, at 34.

47. USB device technology expanded to include wirelessly connected USB devices. For example, WIPO Publication No. WO 2012/128972 ("Scragg") described a system to wirelessly connect USB devices over a distance. Scragg's

system disclosed the ability to "virtualize" a USB device attached to a local/client user computer which could "remotely connect to a server." Ex-1032, ¶15. In this way, a USB device attached to a local/client user's computer system could be used by a second/target computer "anywhere in the world." *Id.* The second/target computer could then "interact[] with the local user's computer and USB device over a network." *Id.* Scragg further discloses that the connection between the USB devices at the local/client and target computer is capable of transmitting video and mouse/keyboard data. *Id.*, at ¶¶20, 24. Scragg's system further discloses the video data is capable of rendering, such as display on a client monitor 108. *Id.*, at ¶26. Scragg explains that the USB device is "virtualized" because the USB device attached to the target computer "emulates the signals received" from the USB device attached to the local/client computer. *Id.*, at ¶35. FIG. 3 demonstrating Scragg's system is reproduced below:

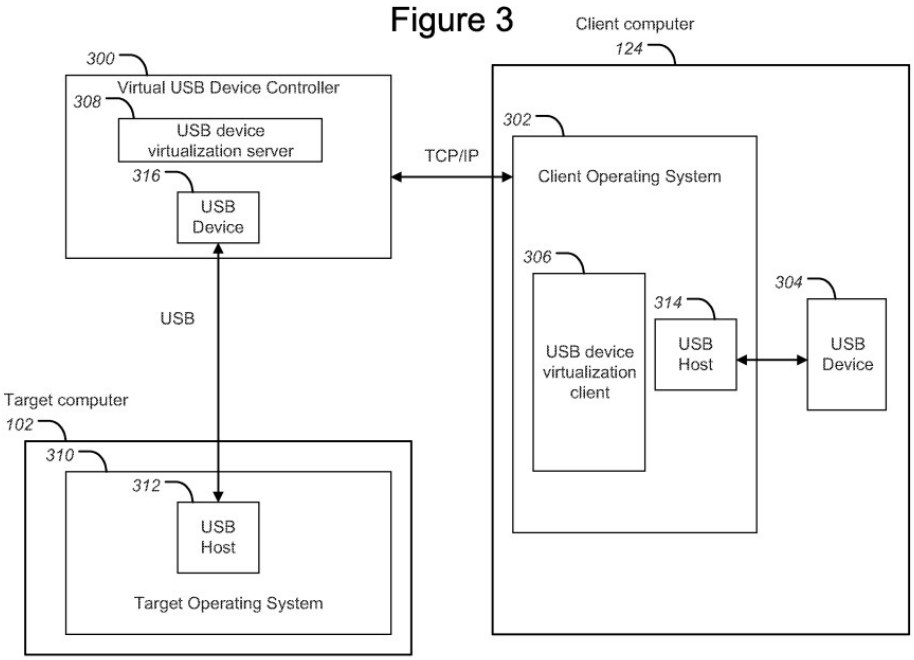

Ex-1032, FIG. 3.

48. Japanese Patent Application Publication No. 2008-165007 ("Uchida") (Ex-1023[2]) described a similar image projection system. Uchida describes a personal computer device 4 wirelessly connected to an image projection device 3 (*e.g.*, a projector) via a wireless device 1. *See*, *e.g.*, Ex-1023, ¶39 and FIG. 1, reproduced below. The wireless device 1 is described as a USB dongle. Ex-1023, ¶39. The

[2] This is the English Translation (Ex-1023) to JP Patent Application Publication No. 2008-165007 (Ex-1024). All citations are to the English Translation (Ex-1023). Ex-1025 is the corresponding certificate of certified translation.

wireless device 1 is connected to the computer 4 and transmitted image data from the computer 4 to the image projection device 3 for display. Wireless setting information is automatically provided without requiring a user to enter this information—thereby making it more convenient for the user to make use of the tool. Ex-1023, ¶¶41-44.

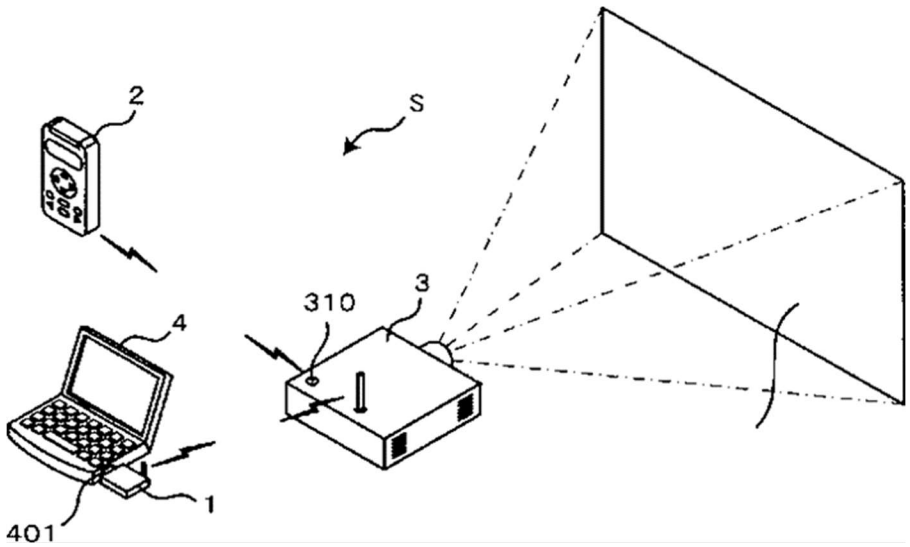

Ex-1023, FIG. 1.

49. Likewise, Japanese Patent Application Publication No. 2007-208606 ("Maeda") disclosed using a PC as an image generation device to generate images and audio, to be transmitted to a projector using a wireless local area network (LAN). Ex-1016, ¶15. In operation, the "screen displayed on the display of PC 100 is transmitted from PC 100 to projector 200 and the screen received by projector 200 is projected onto a screen 30. A wireless LAN card 10 containing a wireless LAN

chip is attached to PC 100, thereby transmitting image signals and audio signals to projector 200 via the wireless LAN." Ex-1016, ¶17.

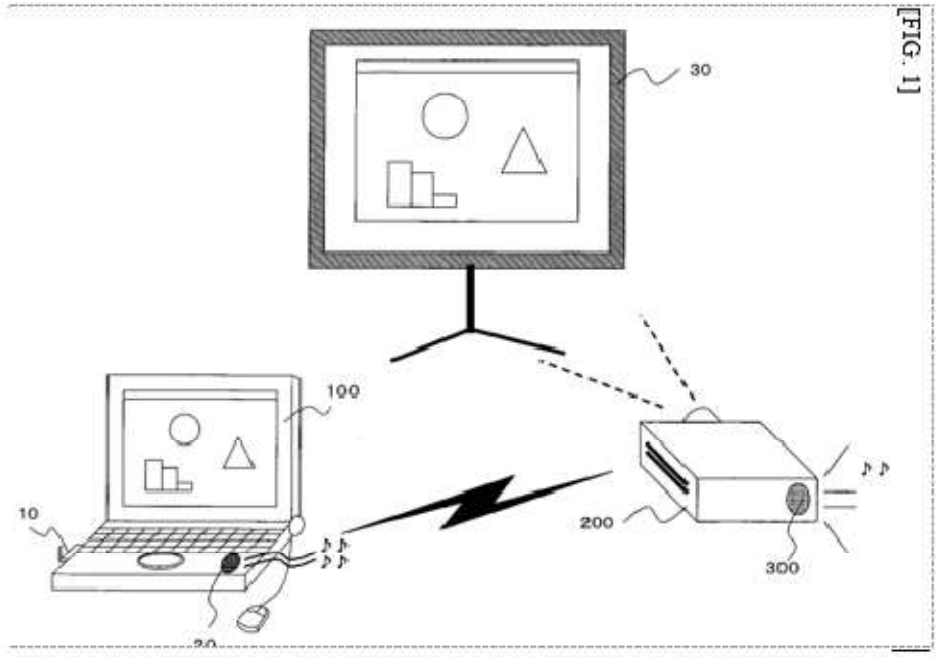

Ex-1016, FIG. 1

50. Near the end of the 2000s, the availability of greater wireless bandwidth led to greater amounts of media content being streamed wirelessly to different devices. For example, using wirelessly connected USB devices connected to separate devices similar to the system of Scragg described above, U.S. Patent Application Publication No. 2010/0295994 ("Kaplan") (Ex-1008) describes a communications system in which a computer 220 is wirelessly connected to a display device 210 via a USB transmitter 120. *See*, *e.g.*, Ex-1008, ¶¶16-18 and FIG. 2, reproduced below. The transmitter is pre-paired with a receiver 110 connected to

the display device 210, such that a user does not need to configure the wireless connection *See* Ex-1008, ¶18. I discuss Kaplan in greater detail below.

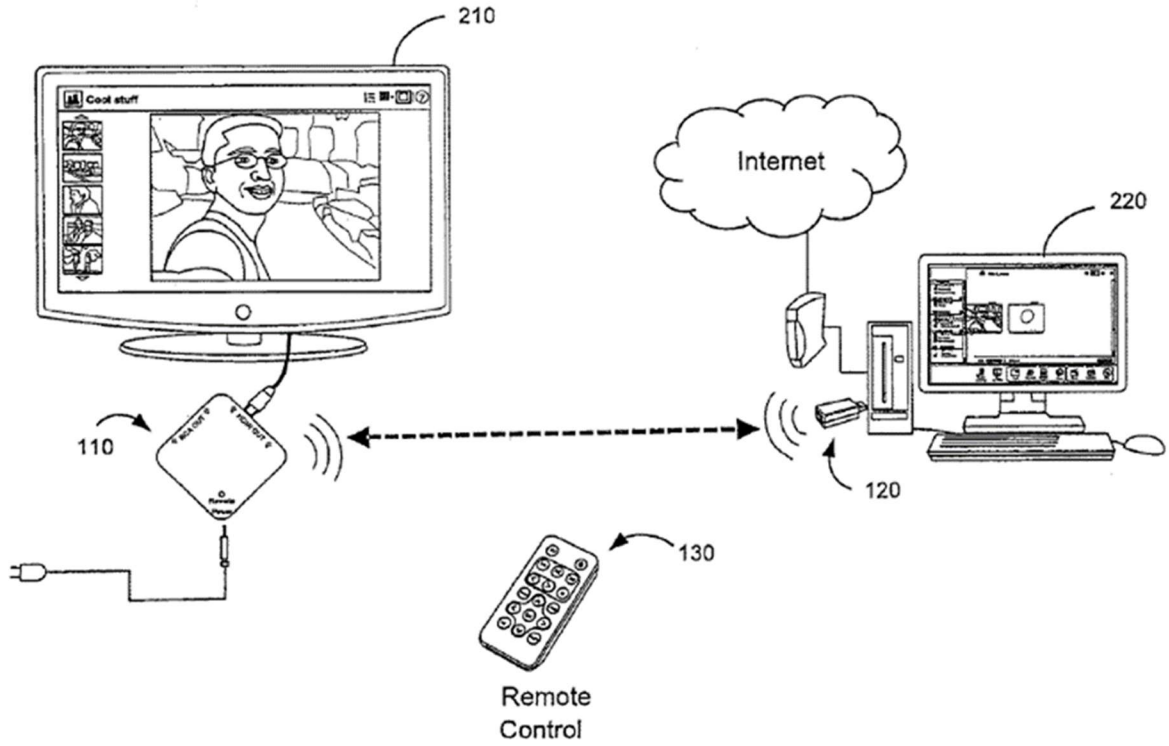

Ex-1008, FIG. 1.

51. Around the same time, several commercial products were available that employed similar USB dongles for wireless communication between a personal computer and a projector or other display. One example was sold by Imation from at least during 2008 Ex-1026 (Imation), p. 8. The Imation system included a USB transmitter dongle that plugged into a personal computer and allowed communication with a base unit that was connected to a projector or monitor. *See* image below reproduced from Ex-1026 (Imation), p. 2. Imation's system adaptable for use at a conference or meeting with multiple wireless adapters able to

communicate with the same projector/monitor Ex-1026(Imation), p. 6 "Associate a New Dongle to the WPL Base Unit."

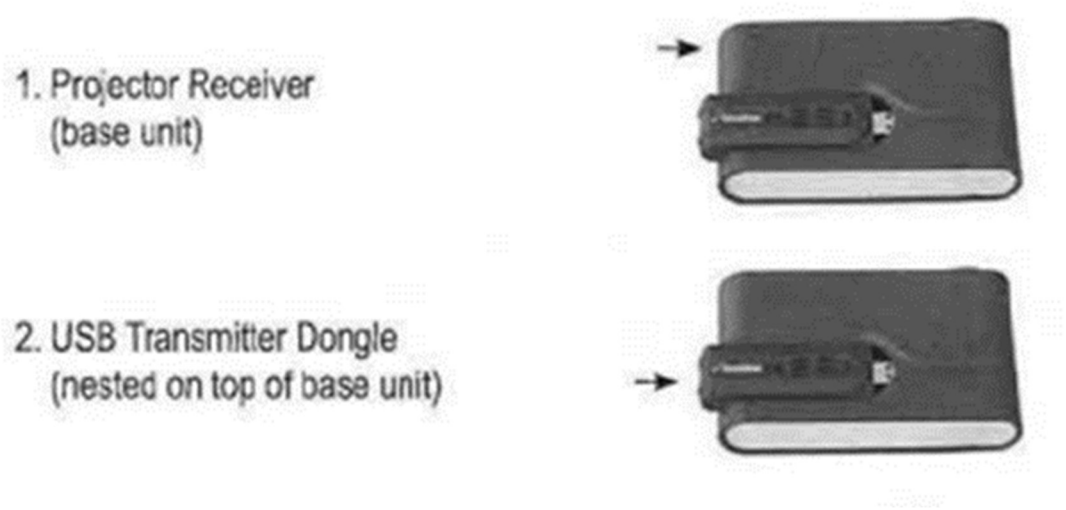

Ex-1026, p. 6 (excerpted).

52. The Imation system had a simple startup that only required attaching the base unit to the projector/display and to power and inserting the USB transmitter dongle into the personal computer. After only about 20 seconds, a start screen appeared that allowed transferring an image from the computer to be displayed on the projector/monitor. *See* image reproduced below from Ex-1026 (Imation), p. 2 "Simple Start UP (PC)". Although an optional special driver was available, this driver was not necessary for operation. Ex-1026 (Imation), "Installing DisplayLink™ Driver (PC)".

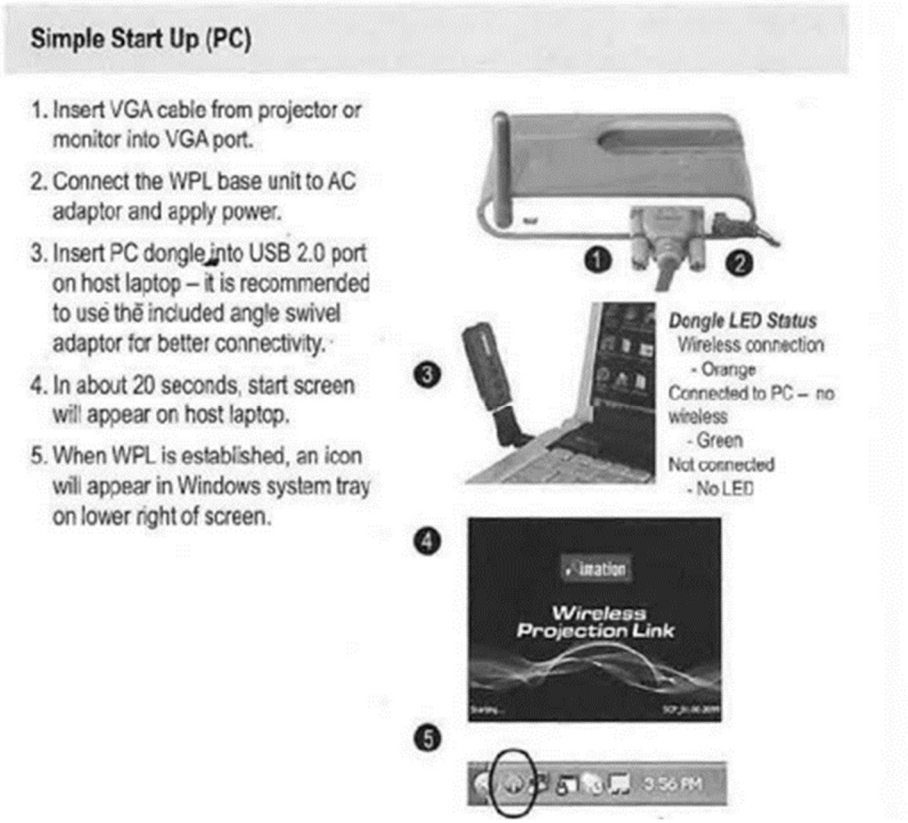

Ex-1026, p. 2 (excerpted).

53. As example of another system employing this technology at the time of invention, another wireless adapter system was sold under the EZAir brand from around 2010. Ex-1027 (EZAir), p. 1. According to promotional materials for the EZAir, "[t]he products operate via a Plug&Play USB dongle that plugs into a USB port available in any PC/Laptop and an adapter that connects to the target device (such as flat TV, speaker system or PC peripherals)." Ex-1027 (EZAir), p. 2. The adapter was also marketed for use in small business and education where multiple participants commonly need to interact with the same projector/display. Ex-1027 (EZAir), p 2. An image from the EZAir marketing material (Ex-1027 (EZAir))

illustrates the Plug&Play USB dongle transmitting image and audio data wirelessly to the adapter connected to a television. The image of an undersea scene from the laptop connected to the dongle is reproduced on the television.

Ex-1027, p. 1 (excerpted).

54. Wireless adapters with a similar form factor were also sold under the Warpia (Ex-1028 (Warpia) and Q-Waves (Ex-1029 (Q-Waves)) brands. According to marketing materials from 2009, the Warpia system allowed wireless connectivity from a notebook or PC to displays, such as projectors, TVs, and monitors Ex-1028 (Warpia), p. 1, "Key Features," "Overview." The Warpia system included pre-associated (*i.e.*, pre-paired) adapters that provided audio and video communication to the display Ex-1028 (Warpia), p. 1, "Key Features." The system was easy and quick to set up. Ex-1028 (Warpia), p. 1, "Key Features." An image from the Warpia marketing material (Ex-1028 (Warpia)) is shown below, illustrating image transfer

from a PC Adapter connected to a laptop computer to A/V Adapters connected to a projector and a television. The PC Adapter was able to connect to a USB port, which were common to all notebooks & PCs at the time, and the A/V Adapter connected to an HDMI port or VGA port of a display device. Ex-1028 (Warpia), p.1 "Overview."

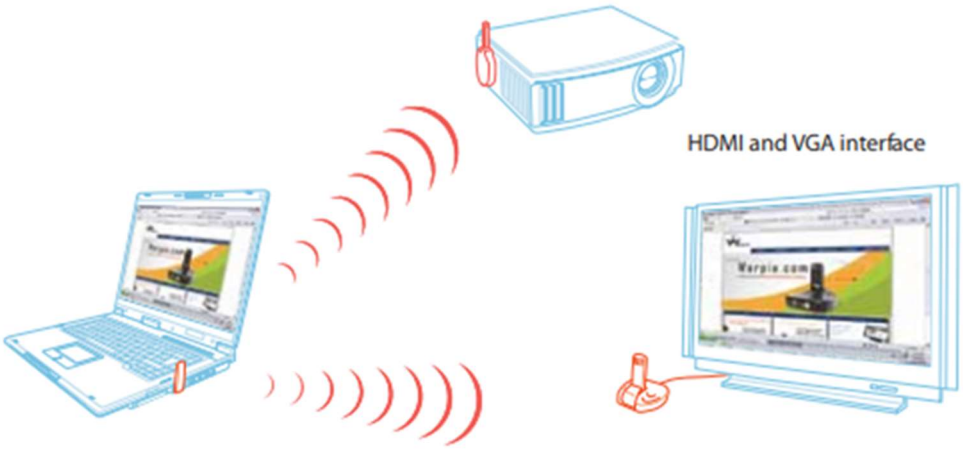

Ex-1028, p. 1 (excerpted).

55. As yet another system implementing a wireless adapter, IOGEAR sold another wireless media communication kit from at least 2008. Ex-1030 (IOGEAR), p.44 (copyright date). The kit included a wireless USB host adapter that plugged into a computer from which media was transmitted wirelessly to a wireless VGA adapter connected to a projector or other display. *See* images below reproduced from Ex-1030 (IOGEAR), pp.13,16.

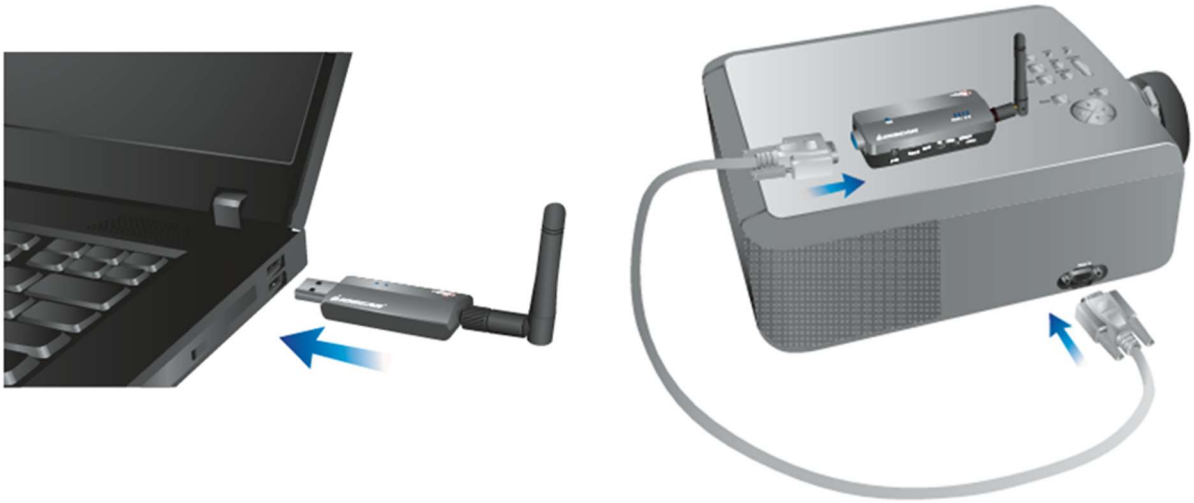

Ex-1030, pp.13 (left – wireless host adapter), 16 (right – wireless VGA adapter) (excerpted).

56. The IOGEAR product anticipated that the host computer operating system would have included pre-installed USB drivers that allowed the USB host adapter to be set up automatically. For instance, IOGEAR indicated that one can "[p]lug the Wireless USB Host Adapter to your computer via option 1 or 2. Windows will detect the device and complete the driver installation process automatically." Ex-1030 (IOGEAR), p. 13. The wireless USB host adapter and wireless VGA adapter were pre-associated (or pre-paired) to improve ease of use, such that no network configuration needs to be entered by a user. Ex-1030 (IOGEAR), p. 40. The IOGEAR kit was also adaptable for use by multiple participants in a meeting. For example, additional wireless USB host adapters could be paired with the same wireless VGA adapter. Ex-1030, p. 28. A "HOST" button on the wireless VGA

adapter could then be used to switch between which wireless USB host adapter was transferring data to the VGA adapter for display. *See* Ex-1030 (IOGEAR), p. 28, "Wireless USB Host Adapter Selection" reproduced below.

Wireless USB Host Adapter Selection

To use this button, you must purchase at least one additional Wireless USB Host Adapter (GUWA200). The additional Wireless USB Host Adapters not included in this kit will have to go through the association process before they can be used with the Wireless VGA Adapter. For more information about the association process, please refer to Appendix - Cable association with other devices .

The "HOST" button on the Wireless VGA Adapter is used to switch between Wireless USB Host Adapters. By pressing this button, the Wireless VGA Adapter will look for the next associated Wireless USB Host Adapter in its list and connect to it. The 1-2-3 lights will move to the next position. If multiple Wireless USB Host Adapters have been associated with the Wireless VGA Adapter, you may have to press the button multiple times before a connection is made with the desired Wireless USB Host Adapter. Up to 16 Wireless USB Host Adapters can be associated with your Wireless VGA Adapter.

Ex-1030, p. 28 (excerpted).

57. As the technology in this space evolved and bandwidth issues were resolved, applications for hosting group communications, or unified communication calls, were developed. For example, by at least 2012, the Skype™ platform widely became available for business or general purpose users. *See* Ex-1009. Ex-1009 demonstrates Skype was available at least as early as September 14, 2012—well before the alleged invention. This software application allowed the users to have "video calling" between members of the call, wherein audio/video captured by the user device's camera function was shared/streamed to a user on a separate user device, and vice versa.

58. At least as early as 2015, Skype expanded their technology, largely using technology the ’346 patent allegedly discloses as novel. *See* Ex-1013. By November 28, 2015, approximately two years before the earliest priority date of the ’346 patent, Skype included the ability for users to host a unified communication call, or “[g]roup video calls” with multiple users. Ex-1013. These calls, as before, allowed the user’s device to capture audio/visual images with the device’s camera function and share/stream the audio/visual images to other user devices that were connected to the call. Further, Skype expanded their technology to also allow “[s]creen sharing,” by which a user, similar to the camera function, could capture the data/image of the user device’s screen, and share/stream that data/image to other user devices connected to the call. Ex-1013.

59. It is apparent from the example prior art patent and product literature discussed above that content sharing techniques were well-established by the time of the invention. It is further apparent that applications and systems for hosting unified communication between user processing devices was well-established and widely used through the industry at the time of the alleged invention. I have discussed several examples of techniques to transfer image data from a computer to a display routed through a wireless USB dongle or similar set of devices, so that data from the computer display can be presented on another display. The USB technology

of these various products utilized standardized USB drivers and communication protocols available to allow a plug-and-play experience. *See*, *e.g.*, Ex-1026 (Imation), p. 2 "Simple Start Up (PC)." I have also discussed examples of unified communication applications and how these applications were used to host audio/visual communications between groups of users and how these applications utilized functional/peripheral devices for the unified communications.

VI. OVERVIEW OF THE '346 PATENT

A. Prior Art Techniques Acknowledged by the '346 patent

60. The '346 patent is directed to tools for making functional devices available to participants of meetings. Ex-1001, 1:5-8. In this vein, the '346 patent recognizes a recent "explosion of electronic communication tools" allowing ad hoc communication, such as "synchronous and asynchronous conferencing, online chat, Instant Messaging, audio conferencing, videoconferencing, data conferencing, application sharing, remote desktop sharing, electronic meeting systems, collaborative management (coordination) tools, project management systems, knowledge management systems, and social software systems." Ex-1001, 1:12-23.

61. The '346 patent acknowledges that web conferencing tools, such as those used for hosting a unified communication (*e.g.*, a Skype call), "can take over audio and/or visual data provided from a host processing device." Ex-1001, 7:66-8:3. Skype is referenced repeatedly in the '346 patent and has been known since at

least 2012. *See*, *e.g.*, Ex-1001, 3:1-4, 7:66-8:21, 13:17-25, 14:64-15:15, 16:36-39, 19:3-16, 20:66-21:5, 23:20-22, 23:38-41, 23:48-54, and Ex-1009; Ex-1013. The '346 patent also acknowledges that Beel (Ex-1005) shows an arrangement of components (FIG. 11 of Beel) that can be used in embodiments (FIG. 4) of the purported invention of the '346 patent. *See* Ex-1001, 5:35-40 incorporating WO 2013/037980 entitled 'Electronic tools and methods with audio for meetings' by reference. Referring to components of FIG. 4 that also appear in FIG. 11 of Beel, the '346 patent also acknowledges "These are fixed and are a combination of vendor specific endpoints and a number of standard endpoints and can be interpreted or understood as a custom Driver, a default OS driver and/or a host application as has been described with reference to FIG. 4 do screen sharing and audio." Ex-1001, 17:65-18:3.

B. The Purported Invention

62. The '346 patent purports to solve problems associated with "a need for high quality audio as well as visual signals to be made available to participants at a meeting." Ex-1001, 1:40-42. Yet, the claims of the '346 patent are simply directed to connecting devices in a communications network and using a device to host a unified communication, such as a Skype call—much like the acknowledged prior art discussed in the previous subsection and further below. *See*, *e.g.*, *id.*, 1:22-33, 5:35-40. Although presented as disclosing a new approach, the '346 patent fails to explain

any concrete distinction from these prior art methods. As I discuss above and in further detail below, all features recited in the challenged claims were already known.

C. Prosecution History

63. I have reviewed the prosecution history of the ’346 patent and noted that the claims were initially rejected based on a combination of two prior art references, “Brands” (U.S. Publication No. 2015/0121466) and “Christison” (U.S. Patent No. 7,761,627). Ex-1004, 505-16. In response, the Patent Owner canceled all previous claims and added new claim which recited in part:

> wherein the client software, when executed by a processor of the processing device, is configured to present the first display device to the processing device and to allow interaction therewith,

Ex-1004, 660.

64. The Patent Owner noted that the claims did not recite a “first peripheral device 130, e.g., none is available.” Ex-1004, 665. Responding to Examiner’s rejections, Patent Owner admitted that Brands discloses embodiments where the “portable application or a software only client [is] installed on the client processing device that do [sic] not include a peripheral device,” but further argued that Brands did not teach that the application could “create[d] a virtual functional device.” *Id*. I further note that Patent Owner provides no argument or explanation regarding how

the peripheral devices would not be a "virtual functional device" given that, for Brands' embodiment to work (*i.e.*, without a peripheral device), the peripheral device(s) would necessarily be exposed to endpoints on the one or more processing devices and therefore be a virtual device. *See* Section VII.H (construction of "endpoint").

65. I note that the Examiner issued a first Final Rejection of all claims based on the combination of Brands and "Beel" (U.S. Publication No. 2015/0169477). Ex-1004, 676-85. Patent Owner made further amendments to additionally limit the claims to require the client software "provide any simulations or translations, as required, to allow interaction between the first display device and the processing device." Ex-1004, 763 (underlining in original; deleted text not shown).

66. Arguing against the rejection, the Patent Owner stated "a specific connection between the first display device and the processing device is provided" and that "a first peripheral device, which is connected to the processing device is not recited in this claim," *i.e.*, that the "direct interaction is without a first peripheral device." Ex-1004, 767, 769. The Patent Owner contended that "the client software 70' [is on the processing device and] is adapted to provide any simulations, or translations that are required to allow" interaction directly between the display

device and the processing device, without the need for a peripheral device connected to the processing device. Ex-1004, 769.

67. Patent Owner argued that the amended claims were novel over the prior art because Brands "is directed to using a processing device that operates through a peripheral device .... [the] combination relies on using peripheral device." Ex-1004, 768. However, Patent Owner again admitted Brands discloses an embodiment that "does not include a peripheral device," but then argues that Brands "does not teach a client software [on the processing device], which ... is configured to provide simulations or translations ... to allow the first display to interact with the processing device." Ex-1004, 770; *see also* Ex-1004, at 665. I again note that no clarification was provided regarding how, if Brands' embodiments do not include a peripheral device, the software that provides simulations or translations disclosed in Brands is not by necessity on the processing device.

68. Furthermore, the Patent Owner also argued that Brands does "not relate explicitly to a [Unified Communication] call." Ex-1004, 769. However, the Patent Owner admits that Brands' system allows "multiple participants, who can be at different locations, to engage in a media conference." Ex-1004, 769. This scenario appears to conform to the definition of a "Unified Communications systems or tools" in the '346 patent as "audio or audio visual communications." *See* Section VII.G

above. Patent Owner did not provide any argument how its "media conference" was not an "audio or audio visual communications."

69. I note that the Examiner issued a second Non-Final Rejection maintaining the previous rejection based on Brands and Beel. Ex-1004, 831-43. The claims were amended to recite, in part, "the processing device having . . . a driver and a client software, when executed on the processing device, is configured to have the processing device interact directly with the base unit over a wireless connection." Ex-1004, 883.

70. Arguing against the rejection, Patent Owner stated the amended claims were different than the asserted prior art because:

> the presentation of the at least one functional device is at the operating system level, such that, for example, the endpoint for the functional device may be presented to the operating system for registration on the processing device, e.g., the endpoint being on the processing device … instead of on the peripheral device.

Ex-1004, 889.

71. Patent Owner argued "the operation of the virtual functional device is at the operating system level of the processing device to allow full control to transfer the virtual device for the Unified Communication call." Ex-1004, 890. The Patent Owner again argued that "there is no teaching in Brands of client software that is

specifically configured such to provide any simulations or translations, as required, to allow interaction between the first display device and the processing device." Ex-1004, 888.

72. I note the Examiner issued a second Final Rejection of all claims based again on the combination of Brands and Christison. Ex-1004, 976-86. In their response, the Patent Owner amended the claims to additionally recite "wherein the client software is further configured to provide data transformations based on a type of functional data from the at least one functional device to the processing device." Ex-1004, 1031 (underlining in original). The Patent Owner argued that the amended features provide:

> different flows / behaviors dependent on the actual data modalities and interprets/processes the data accordingly . . . . in Fig. 15 (middle of page) shows that there are different data flows being done between the 'driver installed on PC', 'base unit' and 'peripheral'. That is, the base unit, there is the 'data decode / processing / encryption' part that shows that the data isn't simply rearranged as in [prior art reference], but that the functional data (*e.g.* audio stream, video stream) is actually interpreted and transformed.

Ex-1004, 1037-38.

73. The Patent Owner also argued that, "the data transformations are related to the functional data of the functional device, e.g., the images for a camera, the

audio data for a microphone, etc., in which the transformations can include encoding/decoding, mixing, (de)multiplexing." Ex-1004, 1038. *But see* Ex-1005, ¶¶71-72, 119-120.

74. I further note that despite the amended claim language being disclosed in both references, a Notice of Allowance was subsequently issued because Brands, while teaching transformations of video data from the processing device, allegedly did not teach transformations of the "functional data from the at least one functional device received by the processing device." Ex-1004, 1049-50. The Examiner noted, however, how Brands taught that the peripheral device comprised software for "receiving, decrypting, and decoding incoming arbitrary media content"[3] and, as conceded by Patent Owner, Brands disclosed embodiments in which the software was necessarily integrated into the processing device (no externally connected peripheral device). Ex-1004, 1050, 665, 770.

VII. CLAIM CONSTRUCTION

75. I understand that claim terms are typically given their ordinary and customary meanings, as would have been understood by a POSA at the time of the alleged invention, which, as I explained above, I have been asked to assume is around December 29, 2017.

[3] Beel contains substantially verbatim disclosure. Ex-1005, ¶¶71-72.

76. In considering the meaning of the claims, however, I understand that one must consider the language of the claims, the specification, and the prosecution history of record. In general, I have been asked to consider the claim terms under their plain and ordinary meanings and thus considered the claims, specification, and prosecution history for the ’346 patent in doing so in support of my opinions concerning the ’346 patent and the prior art discussed herein.

77. I have been told that the ’346 patent is related to European Patent No. 3,732,827 B1 (the “’827 patent”). I have also been told that the ’827 patent is involved in Unified Patent Court proceeding UPC_CFI_582/2024. I understand that the laws and regulations concerning patentability, including novelty, obviousness, and claim construction, in Unified Patent Court proceedings are different than the laws and regulations of the United States. I further understand that the ’346 patent and the ’827 patent contain different specification disclosures, prosecution histories, and claim limitations. Therefore, while I have considered the ’346 patent in my analysis herein, my opinions may not necessarily reach the same conclusion as, and are not intended to apply to, any other proceedings.

78. However, I have also been asked to consider the following descriptions for the terms below. Where the terms appear in the claims, I have read the terms in light of their corresponding descriptions from the ’346 patent in so far it was

necessary to apply them to the prior art. I have accounted for these descriptions in forming my opinions whether or not I have specifically addressed those descriptions in further detail in the following sections.

79. However, in my view, my analyses below remain valid as long as any reasonable construction is applied to the terms below. Further, to the extent the Patent Owner or the Patent Trail and Appeal Board asserts and/or adopts any other proposed construction for the terms below, I reserve the right to address any such construction.

80. I understand some of the terms below presumably invoke 35 U.S.C. § 112(f) ("§ 112(f)"), *i.e.*, is a "means-plus-function" limitation, because each "means" limitation does not recite sufficient structure for performing the recited function.[4] *Williamson v. Citrix Online, LLC*, 792 F.3d 1339, 1349 (Fed. Cir. 2015).

---

[4] I understand Petitioner may intend to argue in the future that the limitation is indefinite because the '346 patent specification describes insufficient corresponding structure for the full scope of the function recited for the claimed "means" terms. Recognizing that the Board cannot address indefiniteness in an IPR proceeding, Petitioner satisfies its burden by advancing a means-plus-function construction in the IPR based on the limited corresponding structure described in the '346 patent.

Per 37 C.F.R. § 42.104(b)(3), I understand the Petitioner is obligated to identify the "specific portions of the specification that describe the structure, material, or acts corresponding to each claimed function" for any limitations that invoke § 112(f). *See* Consolidated Trial Practice Guide ("CTPG"), 45 ("Where claim language may be construed according to 35 U.S.C. § 112(f), a petitioner must provide a construction[.]"). I also understand that Patent Owner may contend this limitation does not invoke § 112(f).

81. As set forth below, whether construed as a means-plus function limitation or not, the limitations requiring "means for", or similar language invoking means plus, captures at least the expressly described structure associated with the claimed function and equivalents. But even if these limitations were found to not evoke § 112(f), the claimed "means" must be construed broadly enough to capture the specifically disclosed examples and equivalents. Thus, my understanding of the

---

See DraftKings Inc. v. AG 18, LLC, IPR2022-01447, Paper 12 at 25 (PTAB Mar. 14, 2023) (instituting review and accepting as procedurally proper a § 112(f) construction advanced in an IPR where the petitioner argued in the parallel litigation that the claim was indefinite for failing to disclose sufficient corresponding structure).

terms, as described in the specification, and the analysis herein also applies to any term regardless of the analysis under § 112(f).

A. "*functional device*" (claims 1, 7, 11, 16, 19)

82. The '346 patent defines a "*functional device*" as "a second peripheral device connected in some way to a base unit." Ex-1001, 9:3-4. Therefore, I consider this definition in my analysis.

83. Claim 7 provides additional specificity to the term "*functional device*" by identifying it as, "*one or more of a data capturing device, a microphone, a speakerphone, a speaker, another display, a touchscreen, a projector, a camera, a video camera, and a webcamera.*"

B. "*to present the at least one functional device to the operating system of the processing device as a virtual functional device*" (Claims 1, 7, 9-11, 16, 18-20)

84. In my view, the '346 patent does not provide a definition for "virtual functional device." However, it describes a virtual functional device as "other hardware or software exposes a virtual device that has the same functionality or more as the combined functionalities of the functional devices [attached to the base unit]." Ex-1001, 10:56-58. Regarding computer technology, the Cambridge Dictionary provides that "virtual" means "created by computer technology and appearing to exist but not existing in the physical world." I note that this aligns with my review of the '346 patent's disclosure.

85. The claims specify that the system does not include an external peripheral device connected to the processing device. Instead, the system is configured to present the functional device to the operating system as a virtual functional device. For example, FIG. 13 illustrates a configuration where "the processing device 160' has no first peripheral device 130" but instead, the "client software 70' can be adapted to interact directly with the base unit 100 over a wireless connection." Ex-1001, 23:1-7. The client software 70' presents the display device 126 to the processing device 160' and allows interaction with it. *Id.*

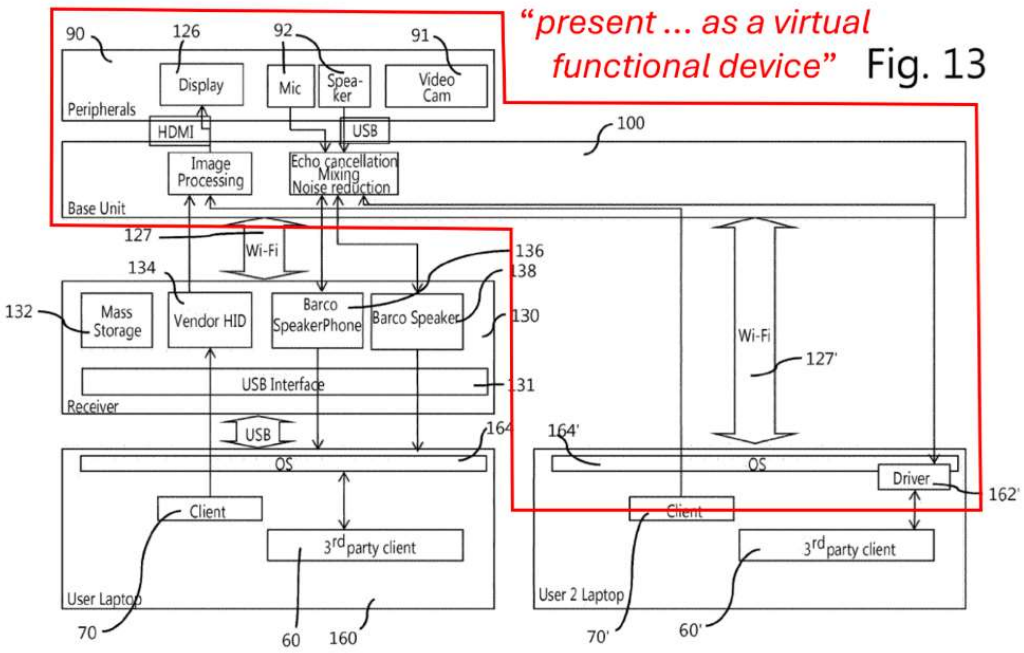

Ex. 1001, Fig. 13.

86. Additionally, the patent explains that third-party software for Unified Communication, located on the processing device, is presented with these virtual

devices, which it then utilizes for calls. Ex-1001, 23:20-22. Therefore, I understand this limitation to mean "to present the at least one functional device to the operating system of the processing device as a non-physical, software component designed to mirror the functionalities of the functional device attached to the base unit and present it to the processing device."

C. "*screen scraping*" (Claims 4, 14)

87. I note that the '346 patent defines "screen scraping" as "reading the video frame buffers and processing them, rather than just rendering them on a display." Ex-1001, 8:22-24. However, the patent later clarifies that reading video frame buffers is merely an example of screen scraping: "screen scrape, e.g., to read one or more video frame buffers from a graphics card in the processing device 160." Ex-1001, 16:56-58.

88. Thus, it is my view that screen scraping is not limited to reading video buffers. Instead, it broadly refers to "a data collection method used to gather information shown on a display to use for another purpose." Ex-1035. This broader interpretation aligns with the broader disclosure of the '346 patent.

D. "*means for encoding, optionally encrypting*" (Claims 8, 17)

89. The term "*means for encoding, optionally encrypting*" appears to invoke means-plus-function language and refers to the software for encoding, optionally encrypting data. I understand the function to be encoding, optionally

encrypting data. The "means for encoding, optionally encrypting" appears verbatim in the specification:

> The system can comprise means for encoding, optionally encrypting the data.

Ex-1001, 2:65-66.

E. "*providing simulations or translations, as required, to allow interaction between the first display device and the processing device*" (Claims 1, 11)

90. I note that the '346 patent does not provide a definition of "*simulations or translations*" but instead cites verbatim portions of the disclosure without further explanation. Ex-1004, 763-767 (citing Ex-1001, 22:54-60). However, portions of the specification refer to simulations as virtually simulating a remote functional device as if it is connected locally. Ex-1001, 23:17-22, 23:36-41. The term *"translation*" lacks a clear definition, but the claim describes that "*simulations or translations ... allow interaction between the first display device and the processing device*." FIG. 5 of the '346 patent further illustrates an example of translating the size of an image from a client PC 106-1 to the main display 126. The inclusion of the phrase "as required" indicates that the simulations or translations are optional features. Accordingly, the term "*simulations or translations*" is best understood to mean "capable of modifying data to present on a first display device."

F. "*configured to provide data transformations based on a type of functional data from the at least one functional device to the processing device*" (Claims 1, 11)

91. I note that the '346 patent does not provide a definition of "data transformation." "Data transformation" is a broad term meaning , "To change the appearance or format of data without altering its content." Ex-1034. The '346 patent further does not explain what it means "to provide data transformations based on a type of functional data." During prosecution, Patent Owner provided six citations to the original specification that allegedly support this limitation: 18:16-23, 19:1-6, 21:14-17, 25:19-23, 28:13-29:2 (corresponding to Ex-1001, 11:52-62, 12:9-18, 14:39-54, 16:36-43, 18:34-19:2, respectively). However, these disclosures merely refers to translations as including encoding, decoding, and encryption. Patent Owner also argued that FIG. 15 defines "transformations" in the context of "data decode / processing / encryption." Ex-1004, 1037-38. Accordingly, this term is best understood to mean "decoding, processing, or encrypting data."

G. "*third-party software for a Unified Communication call" "unified communication*" (Claims 1, 9, 11, 18)

92. I note that the '346 patent defines the "Unified Communications systems or tools" as "audio or audio visual communications such as provided by 'Skype™' or 'Skype™ for Business'." Ex-1001, 7:66-8:3. The '346 patent further explains that such software "can take over audio and/or visual data provided from a

host processing device." Ex-1001, 7:66-8:3. Additionally, the '346 patent states that "processing devices ... shar[e] the Unified Communication (UC) call such as the Skype call or a Skype for Business call." Ex-1001, 19:13-16. Thus, I understand "unified communication call" as "audio or audio visual communication between two or more processing devices."

H. "*at least one fixed or a configurable endpoint of the virtual functional device*" (Claims 10, 20)

93. I note that the '346 patent does not provide a definition for this phrase. The '346 patent states that:

> "Endpoints" can be described as data sources or sinks and are defined for USB Devices which <u>can be physical devices or virtual devices</u>. In the present invention <u>endpoints should be interpreted broadly as data sources or sinks</u>. Hence <u>data can be stored at an endpoint or emitted</u>. An <u>endpoint can act as a kind of buffer can be [sic] defined for physical devices or virtual devices</u>.

Ex-1001, 9:11-18 (emphasis added).

94. The quote above further explains that these endpoints can be associated with either physical devices or virtual devices and are described as acting as buffers to store or emit data during communication. *Id.* I understand a buffer as a temporary storage for digital data that is moving from one place to another, such as data received in a video buffer before being decoded for presentation on a display.

95. The claims specify that the "*fixed or configurable endpoint*" is of the "*virtual functional device*" and is configured to store or emit data associated with the "*virtual functional device*." I note that based on my review of the claims and the prosecution history, the '346 patent's claims does not include an external peripheral device connected to the processing device. Instead, the claims require that the system "present the at least one functional device to the operating system of the processing device as a virtual functional device." Ex-1001, claim 1. As a result, the "*fixed or configurable endpoint*" of the "*virtual functional device*" is necessarily located on the processing device itself.

96. Further, I note that the '346 patent does not expressly define the difference between "*fixed*" and "*configurable*" endpoints, and these are not commonly understood terms of art. According to the '346 patent:

> [F]ixed USB endpoints … are provided for the basic functionality, ... [and] configurable USB endpoints are configured either when pairing a first peripheral device 130 device with a base unit 100 or over the wireless connection 127 between the processing device 130 and the base unit 100.

Ex-1001, 17:63-18:7.

97. In my view, the context of the terms suggest that the "*endpoint*" is either "*configurable*" or it is not, *i.e.*, it is "*fixed*." To the extent the meaning of this term

is reasonably certain, I note that a device must fall into one of these two categories (*i.e.*, if it is not configurable, then it must be fixed), ensuring that this limitation encompasses both scenarios and does not impose additional restrictions on the claim. Alternatively, I note that a fixed endpoint could refer to a mass storage device, while a configurable endpoint might refer to an HID or audio device capable of pairing with a base unit.

98. This limitation also requires that the "endpoint" "is configured to store or emit data of the virtual functional device." This is also my understanding of the USB specification. This is a necessary feature of USB endpoints. Endpoints are buffers, and buffers, by definition, store and emit data. Further, the '346 patent also explains that endpoints are a standard part of the USB specification. *See* Ex-1001, 8:53-67, 17:65-18:20. The USB specification must include an "endpoint," which serves as a data source or sink to facilitate communication within the system.

99. Accordingly, it is my view that this limitation means "a data source or sink located on the processing device that is fixed or configurable and used to transfer data between the processing device and the functional device."

VIII. OVERVIEW OF THE PRIOR ART

A. Beel (Ex-1005)

100. Beel was published as U.S. Pre-Grant Publication No. 2015/0169477 on June 18, 2015, qualifies as prior art under § 102(a)(1). Ex-1005, abstract. Beel

"shows an arrangement of components that can be used in embodiments of the present invention." Ex-1001, 5:35-36; FIG. 4. Beel, which is assigned to Barco NV, features a different inventive entity and was published more than a year before the '346 patent's priority date.

101. Like the '346 patent, Beel discloses systems and methods for wirelessly transmitting media content between an electronic device, or multiple devices, and one or more display devices, specifically, by using peripheral devices connected to the electronic devices and a base node which is connected to the display device. Ex-1005, ¶¶23, 40, 48. Beel uses nearly identical language to describe its systems and methods to that of the '346 patent, indicating significant overlap in the disclosed subject matter.

B. Dinka (Ex-1006)

102. Dinka, issued as U.S. Patent No. 8,369,498 on February 2, 2013, constitutes prior art under § 102(a)(1). Ex-1006, abstract. This reference was not substantively considered during the prosecution of the '346 patent.

103. Dinka is assigned to Skype and discloses methods and systems for facilitating communication between multiple computer terminals and televisions. Ex-1006, abstract, 1:12-15. For example, Dinka describes a communication client application on a local user device, which allows the local user to participate in "communication sessions with other remote users via the network." Ex-1006, 2:44-

55. Dinka discloses the use of bidirectional transmission of audio and visual data, which is encoded, decoded, and (de)multiplexed in both directions. Ex-1006, abstract, 8:7-51, 9:32-50, 13:1-24, 15:24-32.

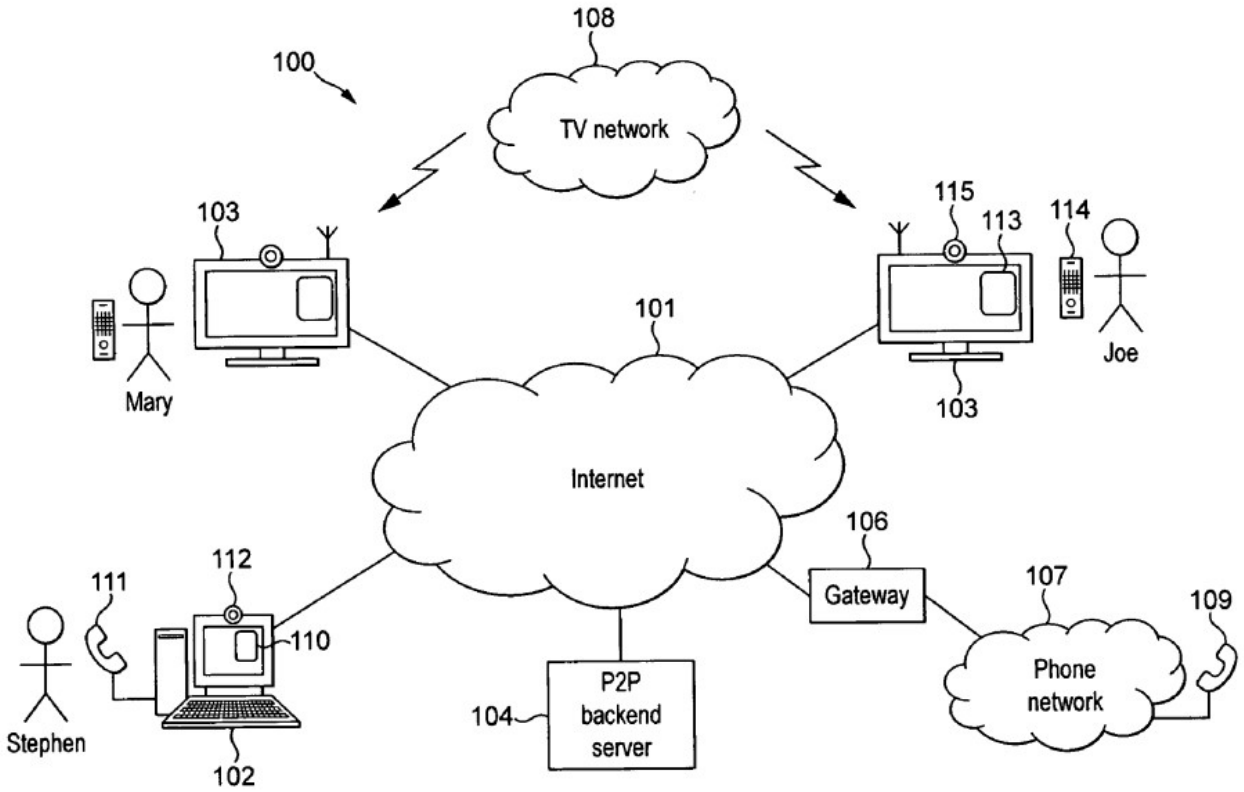

FIG. 1

Ex-1006, FIG. 1.

C. Kaplan (Ex-1008)

104. Kaplan was published November 25, 2010, as U.S. Patent Application Publication No. 2010/0295994. Kaplan is prior art under 35 U.S.C. § 102(a)(1). Kaplan was not considered during prosecution of the ’346 patent.

105. Like the ’346 patent, Kaplan discloses methods for transmitting video content between a computing device and a display device. Ex-1008, abstract. In particular, Kaplan addresses the challenge of simplifying the wireless connection setup process for users, recognizing that traditional network configurations were often “difficult and frustrating” for many. Ex-1008, ¶3. Kaplan further highlights that the complexity of such setups contributes to the high return rate of wireless networking equipment. *See id.*

106. To address these issues, Kaplan proposes a communications system 100 where a computer 220 is wirelessly connected to a display device 210 via a USB transmitter 120. Ex-1008, ¶¶16-18 and FIG. 2, reproduced below. The transmitter 120 and receiver 110 are pre-paired, with the receiver 110 which is connected to the display device 210. This pre-pairing eliminates the need for users to perform any wireless configuration. Ex-1008, ¶18. Kaplan’s system allows the user to select a video for playback, transmitting the selected video footage from the computer 220 through the transmitter 120 to the receiver 110, where it is displayed on the display device 210. Ex-1008, ¶28. Kaplan also specifies that data can be communicated in the alternate direction from the receiver 110 to the transmitter. Ex-1008, ¶39 (“It should be noted that communications both downstream (*i.e.*, transmitter to receiver)

and upstream (*i.e.*, receiver to transmitter) are provided by embodiments of the present invention").

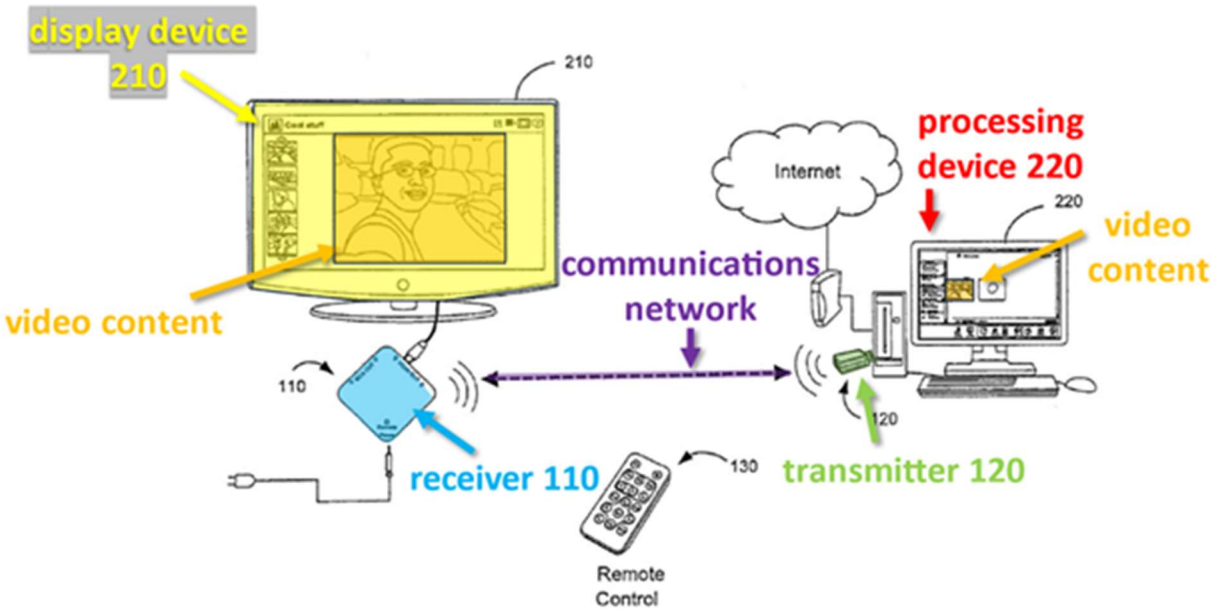

FIG. 2

Ex-1008, FIG. 2.

D. Van de Laar (Ex-1007)

107. Van de Laar, published as U.S. Pre-Grant Publication No. 2016/0014172 on June 18, 2015, qualifies as prior art under § 102(a)(1). Ex-1007, abstract. This reference was not substantively considered during the prosecution of the '346 patent.

108. Like the '346 patent, Van de Laar discloses a system for connecting mobile devices, referred to as "dockees," such as laptops, to one or more peripherals

to control those peripherals in performing their intended functions. Ex-1007, ¶¶55, 73-74, 80, 82.

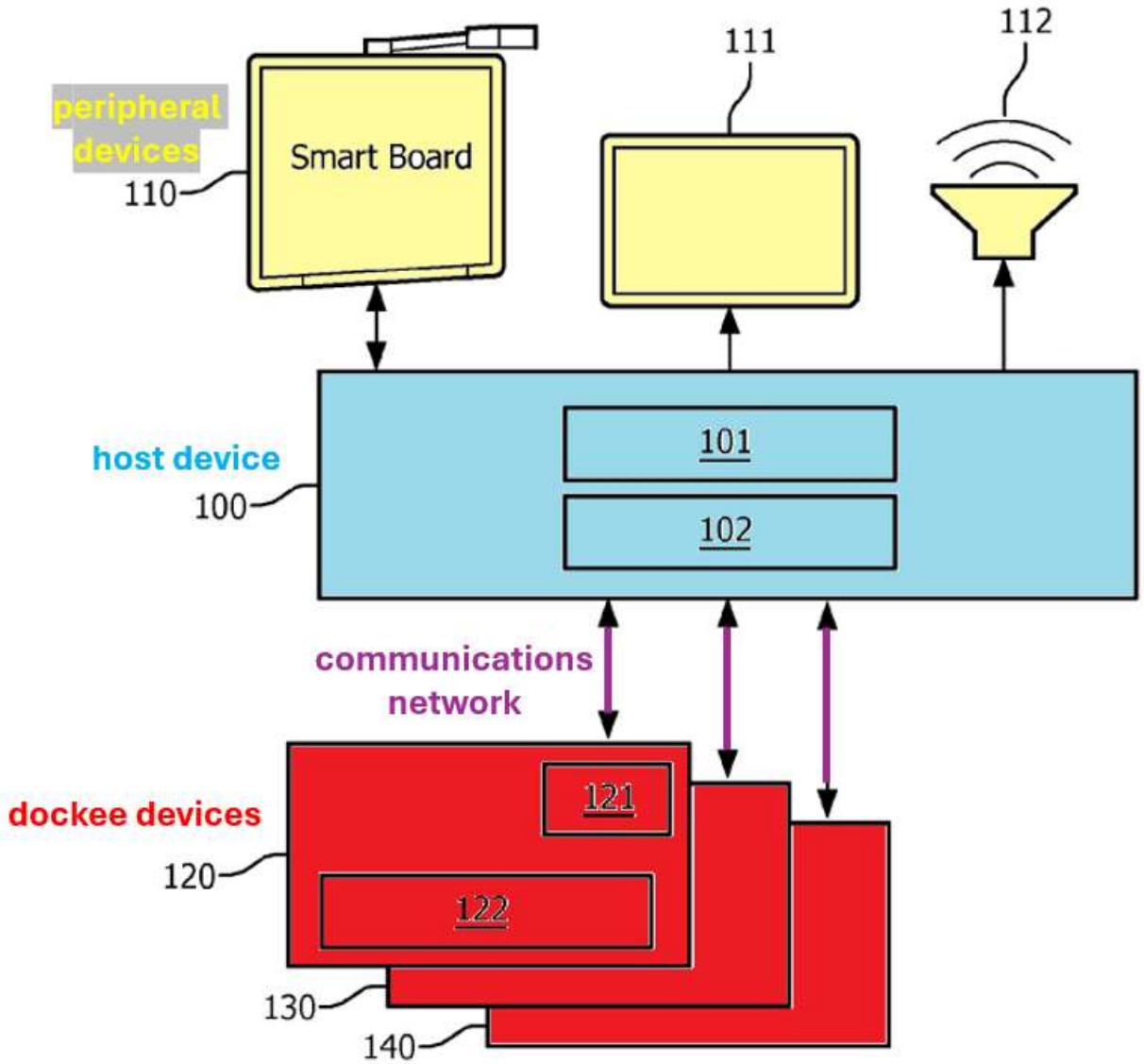

Ex-1007, FIG. 1.

109. The dockees communicate with a host device via a wireless communications network. Ex-1007, ¶¶74-76. Communication between the host device and the peripheral devices can occur through a wired connection, such as

HDMI or USB. Ex-1007, ¶¶54, 110. Additionally, the system supports communication between the dockee devices using a unified communication protocol, such as Skype. Ex-1007, ¶128.

E. Christison (Ex-1011)

110. Christison was published on July 20, 2010, as U.S. Patent No. 7,761,627 and is prior art under § 102(a)(1). It was considered on the record during prosecution. It was allegedly overcome with the amendment adding limitation: "data transformations based on a type of functional data."

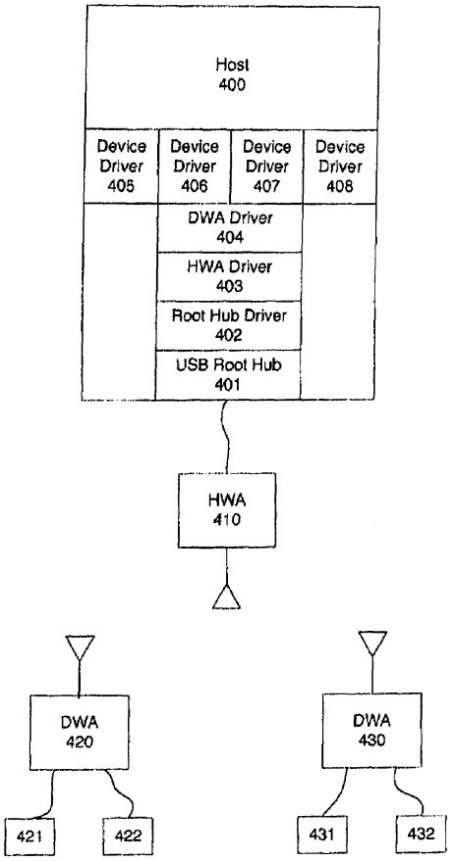

Ex-1011, FIG. 4.

111. Like the ’346 patent, Christison discloses a Host Wire Adapter (HWA) 410 and Device Wire Adapters (DWA) 420/430 for mimicking wired USB devices (421, 422, 431, 432), allowing the USB devices to appear to a PC as wireless USB (WUSB) devices. Ex-1011, 3:59-4:16. This functionality is achieved by configuring USB device descriptor fields to align with the values compliant for WUSB devices. Ex-1011, 6:66-7:5, 9:36-38. By presenting wireless USB devices as “native devices,” Christison introduces throughput efficiencies over prior art systems. Ex-1011, 6:13-19.

F. Applicant-Admitted Prior Art (“AAPA”)

112. I note that the ’346 patent acknowledges that web conferencing or unified communication tools (*e.g.*, Skype) “can take over audio and/or visual data provided from a host processing device.” Ex-1001, 7:66-8:21. Skype is a well-known and widely adopted communication application, since at least 2012. Ex-1009. Further, Skype expanded its functionality to include many of the limitations presented by the claims of the ’346 patent prior to the alleged invention of the ’346 patent. *See* Ex-1013.

113. Additionally, the ’346 patent admits that Beel demonstrates an arrangement of components that may be utilized in embodiments of the present invention. Specifically, the arrangement depicted in FIG. 11 of Beel is incorporated by reference. Ex-1001, 5:35-40.

114. Regarding Beel's FIG. 11 (which is copied as FIG. 4 in the '346 patent), the '346 patent further states, "These are fixed and are a combination of vendor-specific endpoints and a number of standard endpoints and can be interpreted or understood as a custom driver, a default OS driver, and/or a host application as has been described with reference to FIG. 4 to perform screen sharing and audio." Ex-1001, 17:65-18:3.

IX. THE PRIOR ART DISCLOSES AND/OR SUGGESTS THE RECITED FEATURES OF CLAIMS 1-22 OF THE '346 PATENT

A. Claims 1-22 of the '346 Patent Are Unpatentable as Obvious Over Beel in view Dinka, AAPA, and Optionally in View of Christison

1. Rationale to Combine

115. Beel and Dinka both disclose systems for conducting online audio/visual conferences using various communication applications. Ex-1005, abstract, ¶¶85-89, 118, 253, 259; Ex-1006, FIG. 1, abstract, 2:44-3:5. Dinka, as a Skype patent, demonstrates Skype's capability to facilitate unified communication calls, as described by the '346 patent. Ex-1001, FIG. 1C, 3:1-9. Further, nearly two years before the '346 patent's disclosure, the Skype technology allowed for unified communication between groups of users in which a device's camera function could be utilized to share/stream video data and, further, the ability to "screen share" contents from one user's screen to another user's screen. *See* Ex-1013.

116. Similarly, Beel discloses the use of comparable software for "electronic meeting systems," "groupware," and "web conferencing systems." Ex-1005, ¶¶85-89. Beel also includes embodiments where the software does not need to be "zero footprint" and can instead be installed directly on the processing device. Ex-1005, ¶¶215-248.

117. The '346 patent includes admissions regarding prior art (AAPA) that Skype is a known method for performing the web conferencing disclosed in Beel. Ex-1001, 7:66-8:21, 8:53-67. Skype's availability as early as 2012 further supports this understanding. Ex-1009; *see also* Ex-1013. Since Skype was a well-known and established technique for improving similar systems in the same manner, a POSA would have been motivated to combine the teachings of Beel and Dinka, resulting in the use of Skype or similar prior art unified communication call software with Beel's technique for connecting multiple users to a separate base node and functional device. The combination of these teachings would yield the predictable result of a web conferencing system employing software, such as Skype, for hosting unified communication calls while also utilizing one or more functional device's capabilities.

118. Christison discloses a method for wirelessly connecting functional devices to personal computers via a wireless peripheral device. Ex-1011, abstract. I

note that a POSA would be familiar with and understand that connecting and presenting a remote functional device as a virtual device to a user computer was well known in the art. *See* § V (discussing Scragg and other wirelessly connected USB devices). Christison discloses one example of this technique, which emphasizes how its system provided advantages to the art, including of efficiency, by its method of presenting wireless USB devices as "native devices." Ex-1011, 6:13-19. Similarly, Beel teaches connecting remote virtual devices to a client computer. Ex-1005, ¶¶43, 50, 313, 314. A POSA would have recognized that Christison's method of presenting wireless USB devices as "native" devices provides an effective way to implement Beel's virtual devices.

119. In my view, the combination of Beel, Dinka, and Christison would have been obvious to a POSA. By incorporating Christison's known technique of presenting remote devices as native, the combination would improve or suggest one method for Beel to implement its disclosed virtual devices. The resulting system would create the predictable result of a wireless communication system capable of using USB protocols to present remote functional devices as local or "native" functional devices to host a unified communication call, while utilizing one or more functional device's capabilities.

2. Claim 1

120. The teachings of Beel and Dinka, and optionally in view of Christison, disclose and/or suggest all the limitations of claim 1 as a whole.

a. A system for connecting a processing device to a functional device connected to or in a base unit of a wireless connection, the system comprising:

121. I have been asked to assume the preamble of claim 1 is limiting for the purposes of my analysis. If the preamble is not limiting, it would not affect my analysis for the limitations below.

122. In my view, the combination of Beel and Dinka disclose this limitation. For example, Beel discloses, "A system for connecting a processing device to a communications network." Ex-1005, claim 92. Beel also discloses, "Another node of the network 50 is the base or display node 36. This node 36 may optionally be a wireless access point." Ex-1005, ¶119; see also id. ¶¶40, 93, 117, 194-99, 225, 288, 319, 321, 323. Beel further discloses, "connecting a processing device" (*e.g.*, processing devices 31) "*to a functional device*" (*e.g.*, "cameras" and "loudspeakers") "connected to or in a base unit" (*e.g.*, "base node 36") "of a wireless connection":

> <u>Optional equipment can be cameras</u> 39, 40, 41 for recording the progress of the meeting. These cameras can be linked by a network 51, e.g. a cable network to the router 42 and/or the base node 36. <u>Another optional item is a microphone or microphones 38 that can be used to transfer audio, e.g. to the processing devices 31 and to loud</u>

> speakers (not shown) attached to the base node 36 or part of the display 44.

Ex-1005, ¶120 (emphasis added); see also, ¶¶41, 88, 310, FIG. 1a and 1b. Examples of "*functional device[s]*" include data capturing devices, microphones, speakers, displays, and cameras, as expressly defined by claim 7 of the '346 patent. Ex-1001, 2:14-17; 3:7-9; 17:46-51; 20:44-47.

b. the base unit having a transmitter,

123. In my view, the combination of Beel and Dinka disclose this limitation. For example, Beel discloses,

> The base node 36 for communicating with the connection unit 47 has a receiver 63 which can be included in the connection unit 49 or integrated into the base node 36. The receiver is preferably a transceiver. Optionally the transmitter/receiver can be a wireless transmitter/receiver.

Ex-1005, ¶129 (emphasis added); *see also id.*, ¶288 ("The base preferably includes electronics such as having…a wireless transmitter/receiver such as for WiFi or LiFi").

c. a first display device connected to or in the base unit,

124. In my view, the combination of Beel and Dinka disclose this limitation. For example, Beel discloses, "For use in displaying a presentation this base unit is coupled to a display device as described for other embodiments of the present

invention." Ex-1005, ¶319; *see also id*. ¶119 ("The display node 36 is coupled to and adapted to allow display of media on some kind of display 44. The display node is in embodiments of the present invention a base node of the communications network 50").

d. at least one functional device connected to or in the base unit, and

125. *See* § IX.A.2.a above (preamble recites "a functional device connected to or in a base unit").

e. the processing device having a memory, a second display device, an operating system, a third party software for a Unified Communication call, a driver and a client software, when executed on the processing device, is configured to have the processing device interact directly with the base unit over a wireless connection,

126. In my view, the combination of Beel and Dinka disclose this limitation. For example, Beel discloses "*the processing device having a memory, a second display device, an operating system [and] a driver*" nearly verbatim. *See, e.g.*, Ex-1005, ¶¶41 ("the processing device having a memory, a display and an operating system with pre-installed generic drivers"), 56, 310, and claims 82 and 92; *see also id*., abstract, ¶¶45, 64, 68, 71, 94, 125, 142, 196.

127. In my view, Beel also discloses, "*a third party software for a Unified Communication call,*" (*e.g.*, "web conferencing system") "*a driver and a client*

software, when executed on the processing device, is configured to have the processing device interact directly with the base unit over a wireless connection":

> To avoid the need for administrator rights, this embodiment uses other peripheral device pre-installed drivers such as USB class drivers supported without any extra installation. … This embodiment of the present invention routes at least Screen scraped data presented by client Software running on the processing device for transfer to a communications network via a network connection of the processing device.

Ex-1005, ¶221 (emphasis added); *see also id.*, ¶¶85-89, 205, 208, 213-14.

128. The network connection is, for example, the WiFi interface 2 illustrated in FIGS. 8-9. Each of the "operating system, third party software for a Unified Communication call, driver and client software" allow "the processing device interact directly with the base unit over a wireless connection."

129. Additionally, regarding the "Unified Communication call," the '346 patent expressly indicates:

> Unified Communications system or tools can make use of video conferencing cloud service including a video conferencing node to allow one or more users located at the first video conferencing endpoint to communicate with one or more users located at the second video conferencing endpoint in a video conference.

Ex-1001, 8:16-21. The '346 patent defines SkypeTM as a form of "unified communication." Ex-1001, 3:1-10.

130. Beel also discloses the same communication between users at different endpoints,

> [T]he present invention provides an electronic meeting tool for communicating arbitrary media content between different users 37 (with their own processing devices 31, e.g. PC, mobile phone, or tablet) and one display or projector or multiple displays or projectors 44 in the meeting room 30.

Ex-1005, ¶122; *see also, id*., abstract, ¶¶13, 44, 87-88, 113, 253-58.

131. Beel also discloses the use of the meeting tool in a video conferencing context, for example, when "one or multiple client operating devices are not in the direct vicinity of the base node but on a remote location." Ex-1005, ¶253; *see also id*. ¶252 ("video conferencing equipment").

132. In my view, Dinka disclose using the well-known Skype "*unified communication call*" application, which allows users at one endpoint to communicate with users at another endpoint: "The client application is configured to allow a local user of the media appliance to participate in bidirectional communication sessions with other remote users via the network interface and packet-based network." Ex-1006, abstract. Dinka's "unified communication"

application would also have been one obvious example of an application to run on Beel's system.

f. wherein the base unit, via the transmitter, is configured to transmit data over the wireless connection to the processing device,

133. In my view, the combination of Beel and Dinka disclose this limitation. For example, Beel discloses that "*the base unit, via the transmitter, is configured to transmit data over the wireless connection to the processing device*" Ex-1005, ¶129 ("The base node 36 for communicating with the connection unit 47 has a receiver 63 which can be included in the connection unit 49 or integrated into the base node 36. The receiver is preferably a transceiver. Optionally the transmitter/receiver can be a wireless transmitter/receiver"), 288 ("The base preferably includes electronics such as having…a wireless transmitter/receiver such as for WiFi or LiFi"), 71 ("In another aspect of the invention a peripheral device is provided for providing communication connectivity to a processing device which is provided with memory, a display … [T]he peripheral device comprising a memory in which executable software code is stored for execution on the processing device, said executable software code comprising: … a third software code portion for receiving media content from the network and for displaying the media content on the display"). The "display" receiving the media content from the network, *i.e.*, the base unit, in this embodiment of Beel is the display of the processing device" ¶¶ 221-248

g. wherein the client software, when executed by a processor of the processing device, is configured to provide any simulations or translations, as required, to allow interaction between the first display device and the processing device,

134. In my view, the combination of Beel and Dinka disclose this limitation. For example, Beel discloses that "*the client software, when executed by a processor of the processing device, is configured to…allow interaction between the first display device and the processing device*":

> This embodiment of the present invention routes at least screen scraped data presented by client software running on the processing device for transfer to a communications network via a network connection of the processing device.

Ex-1005, ¶221. *See also id.*, ¶¶247-250

135. Although the term "*simulations and translations*" is not expressly defined in the '346 patent, Beel FIG. 2 discloses illustrates or resizing data for presentation on a main display, similar to FIG. 5 of the '346 patent:

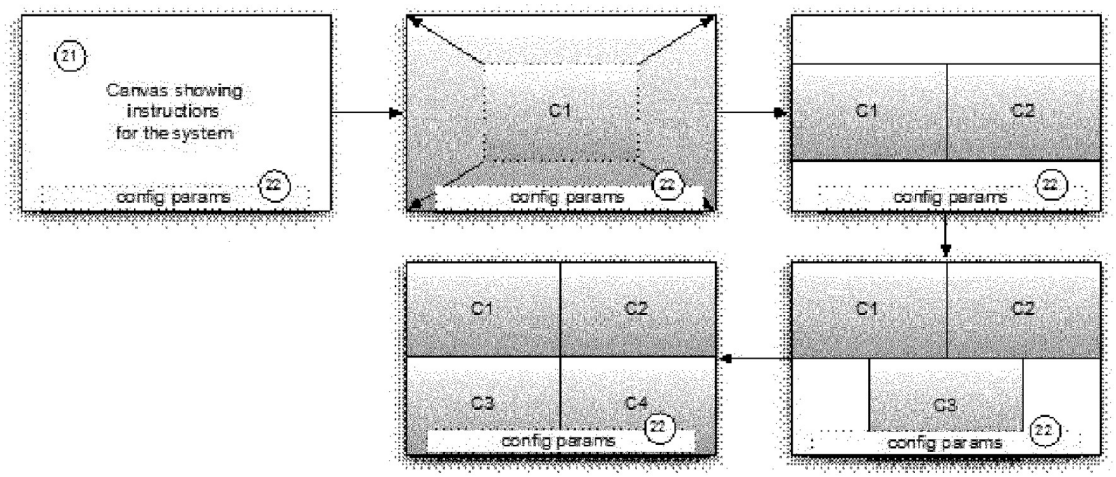

Ex-1005, FIG. 2

136. Beel also explains that "The base node 36 receives the plurality of arbitrary media content coming from one or more connection units 47, and auto composes this media content for rendering on the central display." Ex-1005, ¶143. Here, the auto composition allows Beel to modify the media content to, such as, translating from one screen size to another as required. *See* Beel FIG. 2 (showing images being translated to different sizes). *See also id.*, ¶¶71-72 (underlining added) ("executable software code [of the peripheral device] for execution on the processing device" includes "eleventh code for providing a means for <u>receiving, decrypting and decoding incoming arbitrary media content</u>" and "twelfth code for <u>scaling of incoming arbitrary media streams</u>").

137. Beel also discloses the use of encoders, decoders, packetizers, unpackers, and similar components for processing data. These components perform operations that can reasonably be interpreted as "*simulations or translations*,"

aligning with the functional aspects described in the '346 patent. Ex.-1005, ¶¶320 ("The video signal is then encoded in a video encoder 3, packetized in a video packetizer 4, prepared in an HID protocol packetizer 5 for transport over the plug and play interface using a generic driver 10, such as over a USB interface using generic pre-installed drivers, e.g. a generic pre-installed Human Interface Driver (HID)", 322-23. These components at least translate data (*e.g.*, between an encoded and decoded form) to "*allow interaction between the first display device and processing device*."

h. and wherein the client software and the driver, when executed on the processing device, are configured to present the at least one functional device to the operating system of the processing device as a virtual functional device,

138. In my view, the combination of Beel and Dinka disclose this limitation. For example, Beel discloses,

> The peripheral device preferably acts as a composite device comprising for instance a (virtual) audio speaker device. However instead of operating like a speaker the audio is channeled over the communications network. The peripheral device can preferably capture the audio stream with a device driver, for instance a built in ALSA UAC1, and stream the audio to the base unit … The peripheral device then encodes this time stamp into the audio stream (for instance RTP audio stream) that is streamed to the base unit. At the receiving end, the audio and video streams are then preferably

> recombined taking into account the time stamp to reach lip synchronization.

Ex-1005, ¶317; *see also*, *id*. ¶¶313-316. A POSA would also recognize and understand that Beel is configured for bi-directional communications with a functional device which is attached to the base node. *See* Ex-1005, ¶¶71-72, 120-21. The functional device can be presented directly to the processing device and its operating system. *See* Ex-1005, ¶¶247-250 (embodiments without an attached peripheral device). Therefore, in Beel, an audio "*functional device*" connected to the base unit is "*present[ed]…to the operating system of the processing device*" connected to the peripheral device as a virtual audio speaker device "*as a virtual functional device*."

139. In my view, to the extent Patent Owner argues that Beel and Dinka do not adequately disclose this limitation, Christison demonstrates the obviousness of a "virtual functional device." Christison discloses "Proxy WUSB [wireless USB] Hub 1000 takes advantage of this efficiency by presenting wired USB devices 1010, 1020 as if they are 'native' WUSB devices." Ex-1011, 6:17-19. The USB devices attached to the WUSB Hub appear to the host computer "as if they are native WUSB [wireless USB] devices," *i.e.*, the wireless USB device appears to the host computer as if it were attached. Ex-1011, 6:25-26. A POSA would recognize and understand that this disclosure fits the "virtual functional device" definition, and would have

found it obvious to utilize the advantages of wireless USB devices to communicate over a wireless network.

i. and the third party software for the Unified Communication call is presented with the virtual functional device for the Unified Communication call,

140. In my view, the combination of Beel and Dinka disclose this limitation. For example, Beel discloses that "*the third party software for the Unified Communication call*" (*e.g.,* web conferencing software or Skype) "*is presented with the virtual functional device*" (*e.g.*, "virtual audio device") "*for the Unified Communication call*":

> On the peripheral device in embodiment of the present invention one can implement a virtual audio device. This peripheral device can present itself as an audio out device to the processing device such as a laptop, PDA, laptop, smartphone, tablet, PC, etc it is connected to.

Ex-1005, ¶313; *see also id*. ¶¶252-3 ("video conferencing equipment"). Here, the "*third party software*" on the processing device is presented with the virtual audio device. Therefore, the web conference software disclosed by Beel, is also presented with the virtual audio device "*for the Unified Communication call*."

141. Optionally, it would have been obvious to combine Christison's disclosure of remotely connecting a USB device to a processing device as a native

USB device, i.e., a "virtual functional device," wherein the functional device being a display, camera, microphone or other device, as disclosed in Beel or Dinka, and present the device to the Unified Communication call similar to Beel and Dinka's disclosure of using a display, camera, or microphone for their bidirectional communications between multiple users. See § IX.A.2.h.

j. the processing device being configured to host the Unified Communication between two or more other processing devices, and

142. In my view, the combination of Beel and Dinka disclose this limitation. *See* limitation 1.e, above. Beel further discloses,

> the present invention provides an electronic meeting tool for communicating arbitrary media content between different users 37 (with their own processing devices 31, e.g. PC, mobile phone, or tablet) and one display or projector or multiple displays or projectors 44 in the meeting room 30.

Ex-1005, ¶122; see also, *id*., abstract, ¶¶13, 44, 87-88, 113, 253-58.) Beel defines the "*processing device*" as a "*host*": "Each of the processing devices 31 can be a host device." *Id*., ¶117; *see also*, ¶¶142, 196, 221.

k. wherein the client software is further configured to provide data transformations based on a type of functional data from the at least one functional device to the processing device.

143. In my view, the combination of Beel and Dinka disclose this limitation. For example, Beel discloses a peripheral device executing software code "*to provide data transformations*," such as code "for providing a means for receiving, decrypting and decoding incoming arbitrary media content." Ex-1005, ¶72. This data is "*from the at least one functional device to the processing device*." *Id*. Beel further discloses using data-type specific encoders/decoders, packetizers/unpackers, and the like for "*transformations based on a type of functional data*." Ex-1005, ¶¶314, 320-23. For example, "video encoder 3" encodes video, and "[t]he audio can be then optionally time-stamped synchronous with the video stream for lip synchronization, optionally encoded into for instance Orgg/Vorbis, optionally encrypted using for instance CryptoPP and sent over the TCP/IP link using the RTP/RTCP protocol." *Id*. Therefore, the transformation is "*based on a type of functional data*."

144. In my view, Beel discloses "*the base unit*" transmitting audio/visual data to "*the first peripheral device*":

> Optional equipment can be cameras 39, 40, 41 for recording the progress of the meeting. These cameras can be linked by a network 51, e.g. a cable network to the router 42 and/or the base node 36. Another optional item is a microphone or microphones 38 that can be

> used to transfer audio, e.g. to the processing devices 31 and to loud speakers (not shown) attached to the base node 36 or part of the display 44.

Ex-1005, ¶120.

145. Beel also discloses the peripheral device that is transmitting data, to the degree that this limitation is interpreted to indicate that the "data" is sent from the peripheral device to the functional device:

> [A] peripheral device is provided for providing communication connectivity to a processing device which is provided with memory, **a display**[.] [T]he peripheral device comprising a memory in which executable software code is stored for execution on the processing device, said executable software code comprising: … a third software code portion for receiving media content from the network and for **displaying the media content on the display** in accordance with a set of rules; wherein the first software code portion is adapted to use the generic communication protocol for transferring the media content between the peripheral device and the processing device.

Id., ¶71 (emphasis added); *see also*, *id*., ¶¶50, 56, 75, 93, 119, 122, 126, 298, 310-11. This discloses a well-known method of transferring video and audio bidirectionally during a conference call to one or more users' PCs (*i.e.*, "processing devices") connected to an online conference. For example, Dinka reinforces the

obviousness of implementing bidirectional data communication within Beel's electronic meeting system. Ex-1006, abstract; *see also* Ex-1005, ¶¶85-87.

146. Dinka also describes that electronic meeting tools, such as those disclosed by Beel, "*provide data transformations based on a type of functional data*" in both directions of audio/visual (A/V) transmission. For example, Dinka explains that "The voice engine is arranged to accept speech signals from the microphone 201, and to encode those speech signals for transmission over the internet 101 via the network interface 302. The voice engine is also arranged to decode speech signals received over the Internet." Ex-1006, 9:32-50. Transformations of A/V data, such as encoding and decoding, inherently depend on the "*type of functional data*" being processed. For instance, a "*voice codec*" is used for audio data, while a "*video codec*" is applied to visual data. *Id*. Notably, the Office never considered the disclosures of Beel or Dinka regarding "data transformations based on" whether the "functional data" pertains to audio or visual types during its examination of the '346 patent.

3. Claim 2

l. The system of claim 1, wherein the client software and the driver are configured to present a simulated speakerphone to the operating system to create a virtual microphone and a virtual speaker.

147. In my view, the combination of Beel and Dinka disclose this limitation. For example, Beel discloses that "client software on the processing device [including] pre-installed generic drivers" for communicating to "a (virtual) audio speaker device" and "microphones," which constitute a "*simulated speakerphone*." Ex-1005, ¶¶120, 137, 317.

4. Claim 3

a. The system of claim 1, wherein the client software and the driver are configured to present a simulated videocam to the operating system to create a virtual videocam device.

148. In my view, the combination of Beel and Dinka disclose this limitation. For example, Beel discloses that "client software on the processing device [including] pre-installed generic drivers" for communicating to cameras. *Id*., Ex-1005, ¶¶88, 119-121.

5. Claim 4

a. **The system of claim 1, wherein the client software is configured to provide video data, optionally obtained by screen scraping, directly to the base unit, wherein the base unit processes the video data.**

149. In my view, the combination of Beel and Dinka disclose this limitation. For example, Beel discloses that "the client software is configured to provide video data, optionally obtained by screen scraping, directly to the base unit":

> Optionally the portable application 60 when run on the processing device is adapted to "screen scrape" content of the client display of the client processing device 31 and to transmit it via a network interface of the processing device 31, for example if the connection unit 47 has no transmitter or this is not functioning.

Ex-1005, ¶127, *see also id*., ¶¶221 ("This embodiment of the present invention routes at least screen scraped data presented by client software running on the processing device for transfer to a communications network via a network connection of the processing device"), 320 ("For the processing of video data from the processing device 31, a software 2 is executed on the processing device 31 *e.g.* a client PC, i.e. a screen scraping software as described in the other embodiments").

150. Beel also discloses "the base unit processes the video data":

> Having been routed over a communications network to the base unit 33, the incoming stream is read from the communications interface such as a WiFi access point 22, unpacked in an unpacker 25, decoded in a decoder 26 and then inserted into a Suitable composition

> such as an OpenGL based composition in the compositor 29 for display on a central display device.

Ex-1005, ¶322, *see also id.,* ¶211 ("If the base unit is not in state 'full', the peripheral device will send the screen scraped arbitrary media content to the base unit (B), which will add the media content to the composition on the central display").

6. Claim 5

a. The system of claim 1, wherein the functional data includes video data received from the base unit via the transmitter over the wireless connection.

151. In my view, the combination of Beel and Dinka disclose this limitation. For example, Beel discloses cameras that collect video data and provide this video data to the base node. *See, e.g.*, Ex-1005, ¶120, Fig. 1a. As described above in § IX.A.2.a, the base node ("base unit 33") includes a transmitter capable of wireless transmission of the video data over the communications network ("*wireless connection*"). *See, e.g., id.*, ¶129, 288. The peripheral device includes a transceiver able to receive the video data *See, e.g., id.*, ¶¶71-72, 120, 128.

7. Claim 6

a. The system of claim 5, wherein the data transformations of the video data comprises decoding and compositing or decrypting the video data.

152. In my view, the combination of Beel and Dinka disclose this limitation. For example, Beel discloses a peripheral device with a "software code portion for

receiving media content from the network and for displaying the media content on the display." Ex-1005, ¶71. Additionally, Beel further provides instructions for transforming received video for display: "The executable Software code can comprise eleventh code for providing a means for receiving, decrypting and decoding incoming arbitrary media content." *Id.*, ¶72.

8. Claim 7

a. The system of claim 1, wherein the at least one functional device which is presented to the operating system as a virtual functional device, is one or more of a data capturing device, a microphone, a speakerphone, a speaker, another display, a touchscreen, a projector, a camera, a video camera, and a webcamera.

153. In my view, the combination of Beel and Dinka disclose this limitation. For example, Beel discloses a "*functional device*" that may be "*a microphone.*" Ex-1005, ¶120. "*a speakerphone*". *Id.*, ¶118 ("Audio equipment 46 may be provided, e.g. a telephone that allows other members of the meeting to call in from remote destinations"), "*a speaker.*" *Id.*, ¶¶120, 315 ("physical audio device in the base unit"). "*a display.*" *Id.*, ¶¶119, 120. "*a projector.*" *Id.*, ¶¶40, 119, 122, 123. And "*a camera, a video camera, or a webcamera.*" *Id.*, ¶¶119-21.

9. Claim 8

a. The system of claim 1, further comprising means for encoding, optionally encrypting the data in the base unit or the processing device.

154. In my view, the combination of Beel and Dinka disclose this limitation. For example, Beel discloses this limitation verbatim:

> The system of claim 100 further comprising means for encoding, optionally encrypting the audio data.

Ex-1005, claim 101; *see also* ¶¶67, 70, 162, 314, 315, 319, 320, 323 and claim 90.

10. Claim 9

a. The system of claim 1, wherein the virtual functional device is presented to the unified communication between the two or more other processing devices.

155. In my view, the combination of Beel and Dinka disclose this limitation. For example, Beel discloses that "*the virtual functional device is presented to the unified communication between the two or more other processing devices*":

> the present invention provides an electronic meeting tool for communicating arbitrary media content between different users 37 (with their own processing devices 31, e.g. PC, mobile phone, or tablet) and one display or projector or multiple displays or projectors 44 in the meeting room 30.

Ex-1005, ¶122; *see also id.*, abstract, ¶¶13, 44, 87-88, 113, 253-58.

11. Claim 10

a. The system of claim 1, further comprising at least one fixed or a configurable endpoint of the virtual functional device, wherein the at least one fixed or a configurable endpoint is a data source or a data sink which is configured to store or emit data of the virtual functional device.

156. In my view, the combination of Beel and Dinka disclose this limitation. For example, Beel discloses an "*endpoint of the virtual functional device*," *e.g.*, A/V components connected to the base unit. Ex-1001, 14:12-28, 5:9-16, 17:58-18:14, and claim 7; Ex-1005, ¶¶43, 50, 313-17. These endpoints are either "*fixed*" (*e.g.*, a mass storage device) or "*configurable*" (*e.g.*, virtual audio device). The "*endpoint*" is either "*fixed*" or "*configurable*" because it would either obviously be configured or fixed to be able to provide A/V functions, such as a speaker or a display. Ex-1001, 5:9-16, 17:58-18:14, 23:42-44 (explaining that FIG. 15 illustrates using Beel's FIG. 11 to communicate with a peripheral device); Ex-1005, ¶¶43, 50, 313-17.

157. The '346 patent also admits that Beel's FIG. 11 (which the '346 patent copied as FIG. 4 and incorporated by reference) discloses endpoints:

> These are fixed and are a combination of vendor specific endpoints and a number of standard endpoints and can be interpreted or understood as a custom Driver, a default OS driver and/or a host application as has been described with reference to FIG. 4 do screen sharing and audio.

Ex-1001, 17:65-18:3; *see also id.*, 5:35-40, 17:10-23. Further, I note that a POSA would understand and recognize that endpoints are a necessary or obvious feature of USB devices, including simulated devices. *See* § V (USB endpoints). For example, "each USB logical device is composed of a collection of independent endpoints." Universal Serial Bus Specification, Revision 2.0, pg. 33 (April 27, 2000) (last accessed Jan. 15, 2025) (http://www.poweredusb.org/pdf/usb20.pdf). Therefore, Beel expressly discloses the claimed "*endpoint.*"

158. Beel explains that the "*endpoint is a data source or a data sink which is configured to store or emit data of the virtual functional device*":

> In an embodiment audio data is captured through a virtual sound card interface added as a logical device over the physical interface provided in the peripheral device. On the processing device only a generic sound driver such as a USB sound driver is required which is generally standard on any modern processing devices such as a PC (UAC1 or UAC2).

Ex-1005, ¶43.

> The peripheral device preferably acts as a composite device comprising for instance a (virtual) audio speaker device. However instead of operating like a speaker the audio is channeled over the communications network. The peripheral device can preferably capture the audio stream with a device driver, for instance a built in ALSA UAC1, and stream the audio to the base unit. … The peripheral

> device then encodes this time stamp into the audio stream (for instance RTP audio stream) that is streamed to the base unit. At the receiving end, the audio and video streams are then preferably recombined taking into account the time stamp to reach lip synchronization.

Id., ¶317; *see also*, *id*. ¶¶313-316.

159. Beel's endpoints allow the "*virtual functional device*," such as an A/V components or virtual audio device connected to the base unit, to "*store or emit data of the functional device*" because, for example, Beel states, "[A]udio data is captured at this interface 8-11 internally in the peripheral device 32. This data is then optionally re-encoded and <u>streamed to the communications network to which the peripheral device 32 has access</u>." *Id*., ¶319. Accordingly, the peripheral device of Beel can have a composite device able to store and emit virtual audio/visual data to endpoints, such as a speaker or display.

160. Beel also discloses the same endpoints as the '346 patent:

> Optional equipment can be <u>cameras 39, 40, 41</u> for recording the progress of the meeting. These cameras can be linked by a network 51, e.g. a cable network to the router 42 and/or the base node 36. Another optional item is a <u>microphone or microphones</u> 38 that can be used to transfer audio, e.g. to the processing devices 31 and to <u>loud speakers</u> (not shown) attached to the base node 36 or part of the <u>display 44</u>.

Ex-1005, ¶120 (emphasis added); *see also*, *Id*. ¶¶73, 119-121 and 317 ("The peripheral device preferably acts as a composite device comprising for instance a (virtual) audio speaker device. However instead of operating like a speaker the audio is channeled over the communications network. The peripheral device can preferably capture the audio stream with a device driver, for instance a built in ALSA UAC1, and stream the audio to the base unit.…The peripheral device then encodes this time stamp into the audio stream (for instance RTP audio stream) that is streamed to the base unit. At the receiving end, the audio and video streams are then preferably recombined taking into account the time stamp to reach lip synchronization").

161. Additionally, Dinka also explains that display endpoints buffer digital data: "The television set 103 further comprises, within the same casing: a video frame buffer 320 and user interface (UI) frame buffer 322." Ex-1006, 7:44-64; *see also*, *id*. 8:21-32, 8:66-9:13, 9:45-50, 9:65-10:7, 15:24-30. The POSA would have understood that other endpoints, including microphones and speakers, would also have buffered data prior to or after doing analog-to-digital or digital-to-analog conversion, respectively. Therefore, Beel's endpoints are physical or virtual devices, "*exposed or made available on the first peripheral device*," that can act as a kind of buffer.

12. Claim 22

a. The system of claim 1, wherein the interaction directly with the base unit further includes presenting the first display device to the processing device.

162. In my view, the combination of Beel and Dinka disclose this limitation. For example, Beel discloses "*presenting the first display device to the processing device*":

> [T]he peripheral device comprising a memory in which executable software code is stored for execution on the processing device, said executable software code comprising: … a third software code portion for receiving media content from the network and for displaying the media content on the display.

Ex-1005, ¶71.

13. Claim 11

a. A method for connecting a processing device to a functional device connected to or in a base unit of a communications network,

163. *See* claim 1, § IX.A.2.a.

b. the base unit having a transmitter and a first display device,

164. *See* claim 1, § IX.A.2.b-c.

c. the processing device having a memory, a second display device and an operating system, a third party software for a Unified Communication call, and a driver and a client software wherein, the client software, when executed by a processor on the processing device:

165. *See* claim 1, § IX.A.2.e.

d. interacts directly with the base unit over a wireless connection and provides any simulations or translations, as required, to allow interaction between the first display device and the processing device,

166. *See* claim 1, § IX.A.2.e and § IX.A.2.g.

e. wherein the base unit transmits data over the wireless connection to the processing device,

167. *See* claim 1, § IX.A.2.f.

f. the client software and a driver, when executed on the processing device, present the functional device to the operating system of the processing device as a virtual functional device,

168. *See* claim 1, § IX.A.2.h.

g. third party software for a Unified Communication call is presented with the virtual functional device which it then uses for the call,

169. *See* claim 1, § IX.A.2.i.

h. wherein the processing device hosts the Unified Communication call between two or more processing devices,

170. *See* claim 1, § IX.A.2.j.

i. wherein the client software is further configured to provide data transformations based on a type of functional data from the at least one functional device to the processing device.

171. *See* claim 1, § IX.A.2.k.

14. Claim 12

a. The method of claim 11, wherein the client software and the driver present a simulated speakerphone to the operating system thus creating a virtual microphone and a virtual speaker.

172. *See* claim 2, § IX.A.3.a.

15. Claim 13

a. The method of claim 11, wherein the client software and a driver present a simulated videocam to the operating system thus creating a virtual videocam device.

173. *See* claim 3, § IX.A.4.a.

16. Claim 14

a. The method of claim 11, wherein the functional data includes video data, optionally obtained by screen scraping, directly to the base unit where it is processed.

174. *See* claim 4, § IX.A.5.a.

17. Claim 15

a. The method of claim 14, wherein the data transformations comprises decoding and compositing or decrypting the video data and providing the video data to the first display device.

175. *See* claim 6, § IX.A.7.a.

18. Claim 16

a. The method of claim 11, wherein the functional device which is presented to the operating system as the virtual functional device is any one or more of a data capturing device, a microphone, a speakerphone, a speaker, another display, a touchscreen, a projector, a camera, a video camera, a webcamera.

176. *See* claim 7, § IX.A.8.a.

19. Claim 17

a. The method of claim 11, further comprising encoding, optionally encrypting the data.

177. *See* claim 8, § IX.A.9.a.

20. Claim 18

a. The method of claim 11, wherein the virtual functional device is presented to the unified communication between the two or more other processing devices.

178. *See* claim 9, § IX.A.10.a.

21. Claim 19

a. The method of claim 11, further exposing a same type of functional device to the processing device as is connected to the base unit which is presented to the operating system as a virtual functional device.

179. In my view, the combination of Beel and Dinka disclose this limitation. For example, Beel discloses,

> With reference to the audio data on the processing device 31 such as a client PC, the audio is sent over a port using generic drivers such as

> over a USB port 8 using the standard built-in generic audio driver such as UAC driver 7 … This information is then…transferred to the communications network … On the base unit 33 the audio information stream is recovered at a suitable communications interface such as the WiFi access point 22.

Ex-1005, ¶323 (emphasis added); *see also id*. ¶¶43, 312, 319 and Fig. 11. This shows that, for example, when an audio functional device is "*connected to the Base Unit*" to play the audio stream received from the peripheral device, the "*same type of functional device*" (*i.e*., an audio device in this example) is exposed to the processing device. The UAC driver 7 corresponds to a "*driver for the functional device installed on the processing device*."

22. Claim 20

a. **The method of claim 11, further comprising at least one fixed or a configurable endpoint of the virtual functional device, wherein the at least one fixed or a configurable endpoint is a data source or a data sink which stores or emits data of the virtual functional device.**

180. *See* claim 10, § IX.A.11.a.

23. Claim 21

a. **The method of claim 12, wherein the interaction directly with the base unit further includes presenting the first display device to the processing device.**

181. *See* claim 22, § IX.A.12.a.

B. Claims 1-22 of the '346 Patent Are Unpatentable as Obvious Over Van de Laar in view of Kaplan, AAPA, and Optionally Christison

1. Rationale to Combine

182. In my opinion, Kaplan and Van de Laar disclose systems for wirelessly presenting audio/visual content. Kaplan focuses on presenting content from a computer screen to a remote display device. Ex-1008, abstract, ¶26, FIG. 2. Van de Laar extends this concept by explaining that the content can include information from a unified communications call, such as Skype. Ex-1007, ¶128. A POSA would have been motivated to modify Kaplan's receiver 110 to incorporate features of Van de Laar's WDH to enhance usability and to use the functionality of the receiver's connected peripheral devices. This modification would enable the use of multiple functional devices, beyond the display in Kaplan, to access functional devices in a unified communications call. Ex-1007, ¶9 ("It is an object of the invention to provide a system for wireless docking that enables multiple dockees to wirelessly dock to a host device in an easy to use manner, enabling shared usage of A/V peripherals without causing interference.").

183. Van de Laar also discloses one known method of connecting functional devices to client processing devices by using data sources and data sinks. Ex-1007, ¶123-126, FIG. 3. It is my opinion that a POSA would have understood that there were several known techniques for connecting functional devices, such as speakers,

microphones and cameras, to client devices to, for example, implement a Skype unified conferencing call. The combination of Van de Laar and Kaplan would predictably result in a system of two or more client processing devices and functional devices used in a Skype unified conferencing call.

184. The ’346 patent acknowledges (AAPA) that Skype was a known method for performing the web conferencing disclosed by Kaplan. Ex-1001, 7:66-8:21, 13:17-25. Supporting this, Ex-1009 demonstrates that Skype was available online as early as 2012. Consequently, combining Kaplan and Van de Laar would naturally lead to the use of Skype or similar prior art unified communication call software, because Skype was a well-known technique to improve similar systems. The combination of Kaplan, Van de Laar, and the AAPA would predictably result in a system that uses unified communication call software, such as Skype, to connect two or more processing devices and can utilize the functionality of the virtual functional devices. This combination applies well-known techniques to achieve predictable improvements in system usability and functionality.

185. Christison discloses a method for wirelessly connecting functional devices to personal computers via a wireless peripheral device. Ex-1011, abstract. I note that a POSA would be familiar with and understand that connecting and presenting a remote functional device as a virtual device to a user computer was well

known in the art. *See* § V (discussing Scragg and other wirelessly connected USB devices). Christison discloses one example of this technique, which emphasizes how its system provided advantages to the art, including of efficiency, by its method the efficiency of presenting wireless USB devices as "native devices," which improves usability and system integration. Ex-1011, abstract, 6:13-19. This efficiency can be, for example, being able to use standard drivers for communicating with native devices, reducing time to develop the system and reducing its complexity. Kaplan teaches connecting remote devices to a client computer. Ex-1008, Abstract, ¶¶2-6, 16-17, 44, FIG. 2. Christison's technique of presenting a remote device as "native" provides a straightforward way to implement Kaplan's virtual devices. Ex-1011, abstract.

186. A POSA would have been motivated to combine the teachings of Kaplan, Van de Laar, and Christison. Christison's approach to presenting devices as "native" complements Kaplan and Van de Laar's systems, resulting in a unified communication system that uses USB protocols to present remote functional devices as local or "native" functional devices. This combination applies well-known techniques to achieve predictable improvements in system usability and functionality.

2. Claim 1

187. The teachings of Kaplan and Van de Laar disclose and/or suggest all the limitations of claim 1 as a whole.

a. A system for connecting a processing device to a functional device connected to or in a base unit of a wireless connection, the system comprising:

188. I have been asked to assume the preamble of claim 1 is limiting for the purposes of my analysis. If the preamble is not limiting, it would not affect my analysis for the limitations below.

189. In my view, the combination of Van de Laar and Kaplan disclose this limitation. For example, Van De Laar discloses a *system for connecting a processing device* (*e.g.*, a "dockee") *to a functional device* (*e.g.*, "peripherals") *connected to or in a base unit* (*e.g.*, "host" or "WDH 200") *of a communications network*. Van De Laar's disclosed system "enables multiple dockee devices (such as smartphones, laptops, tablets) to be simultaneously docked to a wireless docking host (WDH) which is connected to a set of peripherals (such as display, mouse, shared local storage, lights/blinds controls, internet connection)" Ex-1007, ¶82. A central element in the wireless docking system is:

> the wireless docking host (WDH) device that enables handling simultaneous wireless docking of multiple docking devices (Dockees). The multiple dockees are connected simultaneously to the WDH, the WDH managing a set of wired and/or wireless peripherals and provides dockees access to these peripherals through a set of wireless

> messaging and streaming protocols, whereby the WDH distinguishes the multiple dockees between primary dockees and secondary dockees, for example a presenter and attendees.

Id., ¶92; *see also* ¶¶73 ("functional device" can include "wireless mice, keyboards, display devices, audio devices, webcams, printers, storage devices, USB hubs"), 94 ("The benefit of doing this is that it allows primary dockees to be able to present content using the peripherals connected to a WDH, such as a large screen and a USB presentation remote control"), 97 ("[T]he WDH device is further configured to receive audio streams from primary and/or secondary dockees to be rendered and/or mixed via the audio output of an audio peripheral so that all people in the room can hear it"), 106, 119 ("a host device is connected to a set of wired and wireless peripherals and makes their function available to client devices over a wireless network (such as Wi-Fi) through a set of network messaging and streaming protocols (so called peripheral function protocols)"), 128.

190. Therefore, Van de Laar's "*functional device[s]*" can contain, such as, "*display devices, audio devices, webcams*." Ex-1007, ¶73; *see also*, *id*., ¶62 ("Optionally, the at least one peripheral comprises at least one of a set of output peripherals like a beamer, a smart-bord, a display screen, a loudspeaker system; or at least one of a set of input peripherals like a mouse, room control unit; or a <u>bidirectional</u> peripheral like a data storage unit") (emphasis added). Therefore, this

system provides wireless communication between dockee devices and functional devices, which are referred to as "peripherals," through a base unit.

191. Kaplan additionally discloses this limitation. For example, FIG. 2 demonstrates a *system for connecting a processing device* (*e.g.*, a "computer 220") *to a functional device* (*e.g.*, "display") *connected to or in a base unit* (*e.g.*, "receiver 110") *of a communications network*. *See* Ex-1008, abstract, ¶¶2-6, 16-18, 23, 28, 44, FIG. 2.

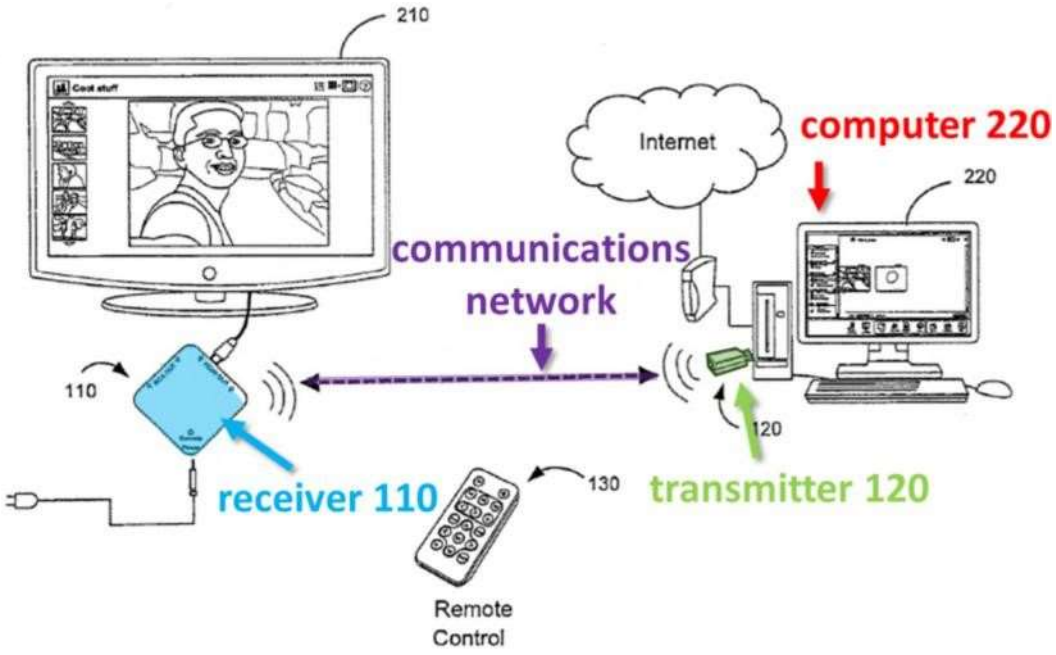

FIG. 2

Ex-1008, FIG. 2

b. the base unit having a transmitter,

192. In my view, the combination of Van de Laar and Kaplan disclose this limitation. For example, Van De Laar discloses *the base* (*e.g.*, "host device 100" or

"WDH 200") *unit having a transmitter* (*e.g.*, "host communication unit"). *See*, *e.g.*, Ex-1007, ¶¶1 ("the host device comprising a host communication unit for accommodating said wireless communication,"), 60 ("the docking processor may be arranged for using local network broadcast or content scaling for transferring shared content to multiple dockee devices"), 75 ("The host device 100 has a host communication unit 102 for accommodating said wireless communication, for example a WiFi unit, well known as such"), claims 1, 11, 12, and 14, FIG. 1.

193. Kaplan additionally discloses the base unit having a transmitter by, for example, "a receiver 110 operable to communicate with a display device. The receiver 110, which may be a transceiver, includes the ability to both transmit and to receive data from a matched transceiver….receiver 110 includes the functionality of transmitting data as well." Ex-1008, ¶16; *see also id.*, ¶¶6, 43, FIG. 3.

c. a first display device connected to or in the base unit

194. In my view, the combination of Van de Laar and Kaplan disclose this limitation. For example, Van de Laar discloses "a display screen 111" as just one example of the "number of peripherals 110, 111, 112" which Van de Laar's "host device 110" (or "WDH") can connect to. Ex-1007, ¶74; *see also id.*, ¶¶62, 123, FIG. 1.

d. at least one functional device connected to or in the base unit, and

195. In my view, the combination of Van de Laar and Kaplan disclose this limitation. *See* § IX.B.2.a above (claim 1a recites "a functional device connected to or in a base unit").

e. the processing device having a memory, a second display device, an operating system, a third party software for a Unified Communication call, a driver and a client software, when executed on the processing device, is configured to have the processing device interact directly with the base unit over a wireless connection,

196. In my view, the combination of Van de Laar and Kaplan disclose this limitation. For example, Van de Laar discloses a "dockee," such as a laptop, having "an application running locally," which includes *"a third-party software for a Unified Communication call*" (*e.g.,* "Skype"). Ex-1007, ¶¶53-54, 58-60, 73-74, 81, 93, 121-128, 164. As admitted by the AAPA, Skype is a unified communication. Ex-1001, 7:66-8:3. Further, a POSA would understand that Van de Laar's system and processing device includes "*a memory, a second display device, [and] and operating system*," as these are obvious elements of processing devices such as mobile phones and computers. For example, Van de Laar describes secondary dockees being able to "monitor the merged display output and/or audio output and follow the presentation on their own screen." Ex-1007, ¶56. Additionally, video can be rendered on the display of the dockee device. Ex-1007, ¶77. Claim 14 of Van de

Laar also mentions "a non-transitory computer-readable medium having one or more executable instructions stored thereon," which implies the presence of a memory. Ex-1007, ¶¶56, 74. Therefore, a POSA would find it obvious that Van de Laar's disclosed mobile phones, laptops, or tablet computers, include both a memory and a display, as such components are standard features of these devices.

197. Van de Laar further discloses a processing device *having a client software* (*e.g.*, "one or more applications") *when executed on the processing device, is configured to have the processing device interact directly with the base unit* (*e.g.*, "host device 100" or "WDH 200") *over a wireless connection*. *See*, *e.g.*, Ex-1007, abstract ("A host device (200) for wireless communication with multiple dockee devices (220,221,230)"), ¶¶1 ("The invention relates to a host device for wireless communication with multiple dockee devices"), 2 ("The invention further relates to a dockee device for wireless communication to a host device,"), 74 ("The system includes a host device 100 for wireless communication with multiple dockee devices 120,130,140, for example mobile phones, laptops or tablet computers"), 124 ("In the structure, a wireless docking host 300 is shown to have wireless communication with a primary dockee 320 for receiving AV data via a unicast link 311, and with a secondary dockee 330 for transferring AV data via a broadcast link 312"), 166-167, FIG. 1 (reproduced below), FIG. 2. The dockee and base unit "*interact directly*" as

there is no peripheral device between them. *Id.*, FIG. 2; *see also*, Ex-1001, 22:54-23:8.

198. The "application running locally" in Van de Laar's system can "take care of presenting data to the user(s), handling interactivity." Ex-1007, ¶53. The "primary dockee run[s] a docking application using Wi-Fi Miracast (WFM) over IP and connected to a WDH" (*i.e.*, *base unit*) where the WDH acts as a "sink and source" to "allow the secondary dockee(s) to function as a WFM sink." Ex-1007, ¶126. Therefore, a POSA would recognize that the application allows the dockees to "*interact directly with the base unit over a wireless network*."

199. Further, a POSA would understand that the operating systems of Van de Laar either necessarily or obviously include pre-installed drivers to operate physical or simulated peripherals. *Id*. ¶¶54, 93, 124. For instance, similar prior art such as Kaplan expressly teach that computers run operating systems, such as Windows, which include such drivers. Ex-1008, ¶¶47-49. Additionally, the '346 patent acknowledges that "[a] driver is standard for the operating system and can drive a standard class of peripheral devices." Ex-1001, 8:53-67. Therefore, Van de Laar necessarily or at least obviously includes drivers to enable these functionalities.

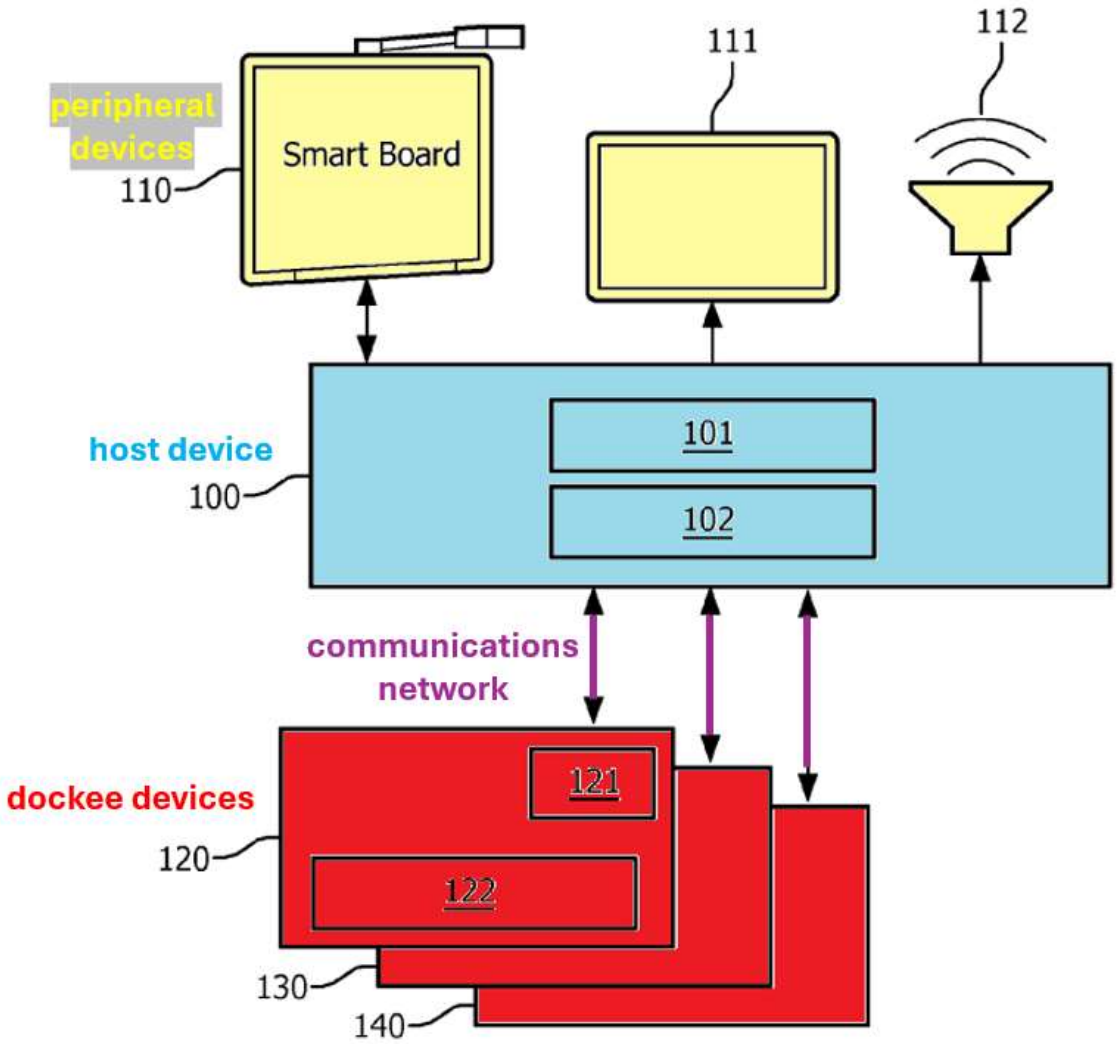

Ex-1007, FIG. 1.

f. wherein the base unit, via the transmitter, is configured to transmit data over the wireless connection to the processing device,

200. In my view, the combination of Van de Laar and Kaplan disclose this limitation. For example, Van De Laar discloses that *the base unit* (*e.g.*, the "host device 100" or "WDH 200") *is configured to transmit data over the wireless*

connection to the processing device (*e.g.*, a "dockee device"). *See*, *e.g.*, Ex-1007, ¶¶96 ("the WDH device is further configured to create and provide a video and/or audio stream representing the video and/or audio output that is sent by primary dockees to the one or more display and/or audio peripherals. This allows all dockees (primary and secondary) to monitor the merged display output and/or audio output and follow the presentation on their own screen and/or headphones") (emphasis added); *see also* ¶¶1, 2, 74, 124, 166-167, FIG. 1, FIG. 2. Van de Laar also discloses that "the dockee [is] able to access the audio and video streams provided by the WDH to monitor the meeting" (Ex-1007, ¶152) and that "secondary dockees devices … is shown to receive the same data from the host, for example by a broadcast signal" (Ex-1007, ¶110). Therefore, a POSA would recognize that Van de Laar's disclosure of data transmission includes bidirectional transmission.

g. **wherein the client software, when executed by a processor of the processing device, is configured to provide any simulations or translations, as required, to allow interaction between the first display device and the processing device,**

201. In my view, the combination of Van de Laar and Kaplan disclose this limitation. For example, Van De Laar discloses that "*the client software, when executed by a processor of the processing device … allow[s] interaction between the first display device and the processing device*." For example, Van de Laar states that a "host device is connected to a set of wired and wireless peripherals and makes their

function available to client devices over a wireless network (such as Wi-Fi) through a set of network messaging and streaming protocols (so called peripheral function protocols)." Ex-1007, ¶119 (emphasis added); *see also id.*, ¶92 ("The multiple dockees are connected simultaneously to the WDH, the WDH managing a set of wired and/or wireless peripherals and provides dockees access to these peripherals through a set of wireless messaging and streaming protocols" (emphasis added). The "interaction" can be with a display device, as Van de Laar discloses "it allows primary dockees to be able to present content using the peripherals connected to a WDH, such as a large screen." *Id.*, ¶94 (emphasis added); *see also id.*, ¶106 ("[V]arious dockees receive different sets of peripheral functions that can be accessed. In particular, the host, e.g. a PC, may make available to dockee shared peripherals as well as exclusive peripherals") (emphasis added).

202. This limitation states that the "*simulations and translations*" are done "as required," which in my view means they are not required. Further, I note that the term is not clearly defined in the '346 patent. However, Van de Laar discloses "*provid[ing] any simulations or translations*," for example, to provide "simulated peripherals," such as a "simulated webcam," in which media data can be scaled, mixed, or re-encoded as needed. *See*, *e.g.*, Ex-1007 ¶¶54, 59-60, 86, 93, 123-25, 162. Van de Laar further states that simulations or translations may be done as the "WDH

may scale the audio/video data to constrain bandwidth," which a POSA would recognize as a form of simulation or translation.

203. Further, Kaplan discloses "compression/decompression algorithms (codecs) are available on the computer 220," and further demonstrates that codecs were known in the art. Ex-1008, ¶48. A POSA would recognize and understand that a codec is known as "an encoder and a decoder," and that encoding and decoding is a form of simulation or translation of data. *See* https://web.archive.org/web/20100906114538/https://www.microsoft.com/windows/windowsmedia/player/faq/codec.mspx (WebArchive from Sept. 6, 2010) (Answer to Question "What is a codec?") (last accessed Jan. 29, 2025). *See also*, "Codec," Cambridge Dictionary, Cambridge University Press & Assessment, https://dictionary.cambridge.org/us/dictionary/english/codec (last accessed Jan. 29, 2025).

h. and wherein the client software and the driver, when executed on the processing device, are configured to present the at least one functional device to the operating system of the processing device as a virtual functional device,

204. In my view, the combination of Van de Laar and Kaplan disclose this limitation. *See* § VII.B.2 (definition of "virtual functional device"). Van De Laar discloses "*present[ing] the at least one functional device*" (*e.g.*, peripheral device)

"*to the operating system of the processing device*" (*e.g.*, dockee device) "*as a virtual functional device*" (*e.g.*, "simulated peripheral"). For example:

> The host may be further arranged to make the AV output for the secondary dockee available as a peripheral for docking (*e.g.* simulated webcam), that will appear to the dockee as a real peripheral (*e.g.* USB webcam) through the docking protocol as would normally would happen when a dockee docks with a WDH. So, in effect, the host may offer one set of peripherals to the primary dockee and another set of peripherals, which may include such simulated peripherals for secondary dockees.

Ex-1007, ¶54; *see also* ¶¶93 ("Moreover, the A/V output may be offered to a secondary dockee through a simulated peripheral (*e.g.* simulated webcam) that would appear to the dockee as if it were a normal peripheral"), 124 ("[T]he WFM source of the WDH may be replaced by a WSB video peripheral (*e.g.* a simulated webcam)")

205. Thus, a simulated device, such as the "simulated webcam" of Van De Laar is a *virtual device* because it is a camera that is not physically attached to the processing device but, however, is software-enabled to mirror the functionality of a physical webcam and "that would appear to the dockee as if it were a normal peripheral." Ex-1007, ¶93. A POSA would recognize this disclosure as a "virtual functional device." Further, I note that this disclosure aligns with the '346 patent's

disclosure. *See* Ex-1001, 10:56-58 ("[A] virtual device that has the same functionality or more as the combined functionalities of the functional devices").

i. and the third party software for the Unified Communication call is presented with the virtual functional device for the Unified Communication call,

206. In my view, the combination of Van de Laar and Kaplan disclose this limitation. Van De Laar discloses that the "*the Unified Communication call is presented with the virtual functional device for the Unified Communication call*" (*e.g.*, "Skype" call). For example:

> [T]he WDH may enable primary dockees to provide output to the WDH and/or its audio peripherals through an audio stream between the dockee and the WDH. This may be based on WSB Audio, Wi-Fi Direct Play Service, VoIP, XMPP, Skype, DLNA or other audio streaming mechanism.

Ex-1007, ¶128 (emphasis added); *see also*, *id*. ¶¶60, 74-76, 120, 124, 166-167.

207. Van De Laar also discloses, the "A/V output may be offered to a secondary dockee through a simulated peripheral (e.g. simulated webcam) that would appear to the dockee as if it were a normal peripheral." Ex-1007, ¶93 (emphasis added). Van de Laar's "simulated peripherals for secondary dockees [wherein the] secondary dockee that receives and renders the at least part of the AV data that is rendered via a corresponding primary peripheral" demonstrates, and a

POSA would recognize, that the "Skype" application can be utilized (*i.e.*, presented) with the virtual functional device. *Id.*, ¶54; *see id.*, ¶124.

208. Optionally, it would have been obvious to combine Christison's disclosure of remotely connecting a USB device to a processing device as a native USB device, i.e., a "virtual functional device," wherein the functional device being a display, camera, microphone or other device, as disclosed in Kaplan or Van de Laar, and present the device to the Unified Communication call similar to Kaplan and Van de Laar's disclosure of using a display, camera, or microphone for their bidirectional communications between multiple users.

j. the processing device being configured to host the Unified Communication between two or more other processing devices, and

209. In my view, the combination of Van de Laar and Kaplan disclose this limitation. *See* claim 1, §§ IX.B.2.e and 2.i above. For example, Van De Laar discloses data transfer using *third party software for the Unified Communication call*, such as Skype. *See*, *e.g.*, Ex-1007, ¶¶74-76, 96, 120, 124, 128, 166-167. Skype is a well-known application for hosting group communication calls and includes video sharing/streaming and "screen sharing," at least as early as 2015. *See* Ex-1009, Ex-1013. I note the AAPA admits Skype is a known group communication application. *See* Ex-1001, 7:66-8:3.

210. Van de Laar's disclosure aligns with the '346 patent:

> Unified Communications system or tools can make use of video conferencing cloud service including a video conferencing node to allow one or more users located at the first video conferencing endpoint to communicate with one or more users located at the second video conferencing endpoint in a video conference.

Ex-1001, 8:16-21.

211. Therefore, Van de Laar's system "allows the dockee users to collaborate, interact, share content with each other during the meeting/lecture." Ex-1007, ¶95.

k. wherein the client software is further configured to provide data transformations based on a type of functional data from the at least one functional device to the processing device.

212. In my view, the combination of Van de Laar and Kaplan disclose this limitation. *See* § VII.F (definition of "data transformation"). For example, Van De Laar discloses executing software code "*to provide data transformations*," such as data scaling, transcoding, and mixing. *See*, *e.g.*, Ex-1007, ¶56, 59-60, 123, 126. I note that a POSA would recognize and find it obvious in the art that data is conventionally scaled, transcoded, or mixed *based on a type of functional data* it represents, such on whether the data is audio data, visual data, or another type of data. A POSA would understand that different data types require different methods

of scaling, transcoding, or mixing, and therefore, must be based on the type of data it is.

213. In my view, Kaplan also discloses that "*provid[ing] data transformations based on a type of functional data from the at least one functional device to the processing device*. *See*, *e.g.*, Ex-1008, ¶¶32 (scaling video data); 48 (compressing data using a codec "*based on a type of functional data*"). A POSA would recognize and understand that codecs, which were well-known in the art, are specific to data type, such as whether the data being compressed, decompressed, encoded or decoded is audio data, visual data, *etc*. Therefore, the codec would provide translations "*based on a type of functional data*" it is.

3. Claim 2

a. The system of claim 1, wherein the client software and the driver are configured to present a simulated speakerphone to the operating system to create a virtual microphone and a virtual speaker.

214. In my view, the combination of Van de Laar and Kaplan disclose this limitation. *See* claim 1, § IX.B.2.h. For example, Van De Laar discloses,

> [T]he WDH may enable primary dockees to provide output to the WDH and/or its audio peripherals through an audio stream between the dockee and the WDH. This may be based on WSB Audio.

Ex-1007, ¶128.

215. Van De Laar indicates that a "WSB" peripheral can be a simulated peripheral. *See*, *e.g.*, Ex-1007, ¶¶93, 124 ("a WSB video peripheral (e.g. a simulated webcam)"). Further, Van de Laar additionally discloses that the "host may be further arranged to make the AV [audio/visual] output for the secondary dockee available as a peripheral for docking." Ex-1007, ¶54. A POSA would have understood that the WSB audio can be achieved using simulated audio peripherals, such as a simulated microphone and a simulated speaker (*i.e.*, *simulated speakerphone*).

4. Claim 3

a. The system of claim 1, wherein the client software and the driver are configured to present a simulated videocam to the operating system to create a virtual videocam device.

216. In my view, the combination of Van de Laar and Kaplan disclose this limitation. *See* claims 1-2, §§ IX.B.2.h, B.3.a above. Van De Laar discloses *present*[ing] *a simulated videocam* (*e.g.*, simulated webcam) *to the operating system to create a virtual videocam device*. *See*, *e.g.*, Ex-1007 ¶¶54, 93, 124.

5. Claim 4

a. The system of claim 1, wherein the client software is configured to provide video data, optionally obtained by screen scraping, directly to the base unit, wherein the base unit processes the video data.

217. In my view, the combination of Van de Laar and Kaplan disclose this limitation. Van De Laar discloses "*the client software is configured to provide video*

data … directly to the base unit." For example, Van de Laar discloses that a "dockee device may connect to the video and/or audio stream provided by the WDH that represents the video and/or audio output that is sent by primary dockees to the one or more display and/or audio peripherals." Ex-1007, ¶103 (emphasis added). In Van de Laar's system, the communication is from the dockee device directly to the host 100 or WDH, before the data is sent to the peripherals. *See* Ex-1007, FIGs. 1-2. *See also id.*, ¶¶115 ("A primary dockee/presenter P can use the WDH peripherals for giving a presentation to multiple attendees … The WDH provides an A/V stream representing the output being sent by presenter P to the WDH peripherals" (emphasis added)), 123 ("In a further embodiment, the set of peripherals contains one or more display peripherals. The WDH may be configured to provide a video stream representing the output that is sent by the primary dockees to the one or more display peripheral" (emphasis added)). The dockee and base unit "*interact directly*" because there is no peripheral device in between the dockee and the host device. *Id*. FIG. 2; *see also*, Ex-1001, 22:54-23:8.

218. Van De Laar also discloses "*the base unit processes the video data*":

> [T]he display output may be merged by the WDH using split screen, PIP overlay or any other means of audio and video mixing, scaling and/or re-encoding.

Ex-1007, ¶123; *see also*, *id*. ¶¶56 ("Optionally, in the host device, the docking processor is arranged for providing, to the primary dockee device, write access to the at least one peripheral for said determining the AV data to be rendered, and for providing, to the secondary dockee device, read access to the at least one peripheral for transferring at least part of the AV data to be rendered. For example, the read access may be to the original, full resolution AV data, or to a modified, e.g. scaled and/or transcoded, representation of the primary AV data"), 59-60.

219. The combination of Van de Laar and Kaplan also disclose "screen scraping" I note that "screen scrap[ed]" data is an "optional[]" limitation of this claim and, thus, is not necessary to satisfy this claim limitation. However, Van de Laar discloses "shared content" or "shar[ing] … presentations, whiteboard, or smartboard contents." Ex-1007, ¶¶60, 80, 95, FIGs. 1-2. Further, Kaplan discloses that "Video content is then shared." Ex-1008, ¶¶24, 23, 26. A POSA would recognize that sharing content from a device necessarily or obviously includes "screen scraping" content from the user's device which is sharing the content. *See also* § VII.C.

6. Claim 5

a. The system of claim 1, wherein the functional data includes video data received from the base unit via the transmitter over the wireless connection.

220. In my view, the combination of Van de Laar and Kaplan disclose this limitation. Van De Laar discloses *the functional data includes video data* (*e.g.*, "AV data") *received from the base unit* (*e.g.*, "host device") *via the transmitter* ("host communication unit") *over the wireless connection*. For example:

> To the secondary dockee device, the AV data to be rendered via the at least one peripheral is additionally transferred so as to enable monitoring the AV output data locally at the secondary dockee, e.g. rendering video on the display of the dockee device.

Ex-1007, ¶77 (emphasis added); *see also*, *id*. abstract, ¶¶13, 36, 60, 78, 93, 124, 166, claims 1, 12, and 14. I also note that a POSA would recognize that FIG. 1 of Van de Laar shows that data from the Smart Board 110 can flow into the host device 100, which can then flow to the dockee devices 120, 130, 140, which aligns with Van de Laar's disclosure. Ex-1007, FIG. 1.

7. Claim 6

a. The system of claim 5, wherein the data transformations of the video data comprises decoding and compositing or decrypting the video data.

221. In my view, the combination of Van de Laar and Kaplan disclose this limitation. *See* claim 4, § IX.B.5.a above. For example, Kaplan discloses a "resident

software application [which] may determine whether certain compression/decompression algorithms (codecs) are available on the computer" or whether to install certain codecs otherwise. Ex-1008, ¶48. I note that a POSA would recognize that codecs were well-known in the art by the time of the alleged invention of the '346 patent. This is further supported by Kaplan's disclosure that they may already be installed on computing devices or others may be further downloaded.

222. Moreover, a POSA would recognize and understand that a codec is "an encoder and a decoder," *i.e.*, it can perform both functions. *See* https://web.archive.org/web/20100906114538/https://www.microsoft.com/windows/windowsmedia/player/faq/codec.mspx (WebArchive from Sept. 6, 2010) (Answer to Question "What is a codec?") (last accessed Jan. 29, 2025); *see also*, "Codec," Cambridge Dictionary, Cambridge University Press & Assessment, https://dictionary.cambridge.org/us/dictionary/english/codec (last accessed Jan. 29, 2025). A POSA would further understand and find it obvious that a codec is able to "decode" or "decrypt" an incoming data stream, as this is the function of the codec. Therefore, a POSA would find that Kaplan discloses decrypting the video data.

223. Moreover, Van De Laar also discloses, "the read access may be to the original, full resolution AV data, or to a modified, e.g. scaled and/or transcoded, representation of the primary AV data." Ex-1007, ¶56. Van de Laar discloses using

standard encrypted secure WiFi connections. *See id.*, ¶¶75, 118. This WiFi connection is used to connect the host device with the dockee devices. *Id.*, ¶6. Secure wi-fi connections were ubiquitous and, as of at least 2017, used standards including WEP, WPA, WPA2, and AES, as by the Wi-Fi Alliance in 2017. *See* Ex-1033. Therefore, a POSA would have understood the secure communication protocols referred to in both Kaplan and Van de Laar would include "decoding" or "decrypting" on the processing device for an incoming data stream obtained from the WiFi network.

8. Claim 7

a. The system of claim 1, wherein the at least one functional device which is presented to the operating system as a virtual functional device, is one or more of a data capturing device, a microphone, a speakerphone, a speaker, another display, a touchscreen, a projector, a camera, a video camera, and a webcamera.

224. In my view, the combination of Van de Laar and Kaplan disclose this limitation. *See* claim 1, § IX.B.2.h above. Van De Laar discloses *functional device[s]*, which are referred to as "peripherals." These peripherals include as examples "wireless mice, keyboards, <u>display devices, audio devices, webcams</u>, printers, storage devices, USB hubs." Ex-1007, ¶73 (emphasis added); *see also*, *id.*, ¶62. Van De Laar also discloses that these peripherals can be presented to the dockees as "a simulated peripheral (e.g. simulated webcam)." Ex-1007, ¶93.

9. Claim 8

a. The system of claim 1, further comprising means for encoding, optionally encrypting the data in the base unit or the processing device.

225. In my view, the combination of Van de Laar and Kaplan disclose this limitation. For example, Van De Laar discloses that the "display output may be merged by the WDH using split screen, PIP overlay or any other means of audio and video mixing, scaling and/or re-encoding." Ex-1007, ¶123. Since the WDH in Van de Laar is the "base unit," the re-encoding is done "in the base unit." Van de Laar also discloses "the read access may be to the original, full resolution AV data, or to a modified, e.g. scaled and/or transcoded, representation of the primary AV data." Ex-1007, ¶56 (emphasis added).

10. Claim 9

a. The system of claim 1, wherein the virtual functional device is presented to the unified communication between the two or more other processing devices.

226. In my view, the combination of Van de Laar and Kaplan disclose this limitation. *See* Claim 1, § IX.B.2.i above. *See also* Ex-1007, ¶¶115, 117-18, 122, 127.

11. Claim 10

a. The system of claim 1, further comprising at least one fixed or a configurable endpoint of the virtual functional device, wherein the at least one fixed or a configurable endpoint is a data source or a data sink which is configured to store or emit data of the virtual functional device.

227. In my view, the combination of Van de Laar and Kaplan disclose this limitation. *See* § VII.8 (definition of "endpoint"). For example, Van De Laar discloses:

> The primary dockee will function as a WFM source and the WDH as both a WFM sink and source. In order to allow the secondary dockee(s) to function as a WFM sink the WDH should forward the WFM packets in broadcast mode.

Ex-1007, ¶126 (emphasis added); *see also*, *id*. ¶¶82 ("Primary dockee devices will have direct access to the peripheral functions offered by the WDH"), 92 ("The multiple dockees are connected simultaneously to the WDH, the WDH managing a set of wired and/or wireless peripherals and provides dockees access to these peripherals" (emphasis added)), 93 ("Moreover, the A/V output may be offered to a secondary dockee through a simulated peripheral (e.g. simulated webcam) that would appear to the dockee as if it were a normal peripheral" (emphasis added)), 123-125, FIG. 3 (reproduced below).

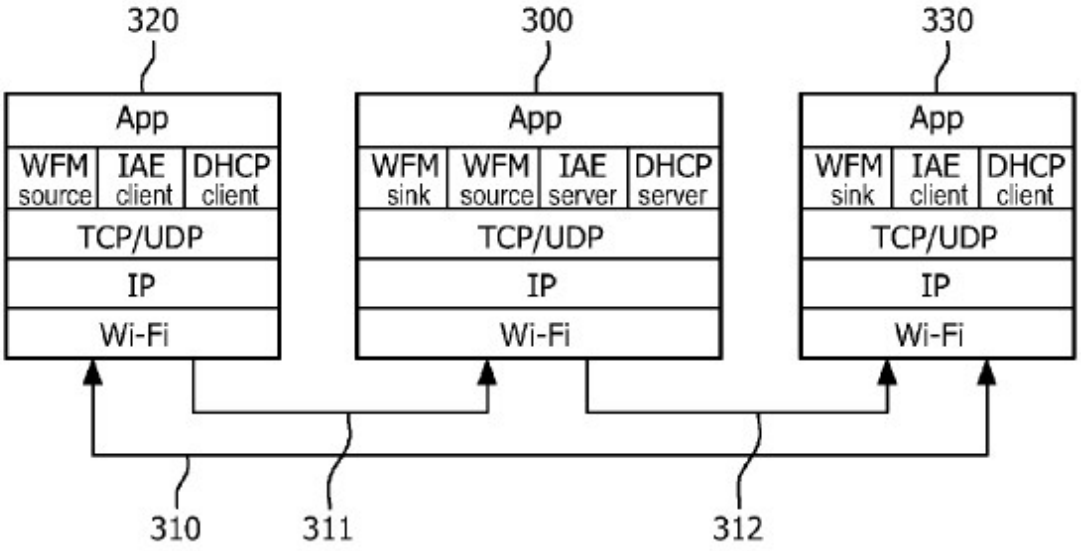

FIG. 3

228. I note that the '346 patent gives examples of endpoints or virtual devices as capable to buffer data, *e.g.*, "… a microphone, a speakerphone, a speaker, a display, … a projector, a camera, a video camera, or a webcamera." Ex-1001, 5:9-15. These devices include a buffer, or temporary storage, as admitted by the '346 patent. Ex-1001, 9:11-17. Further, I note that a POSA would understand and recognize that endpoints are a necessary or obvious feature of USB devices, including simulated devices. *See* § V (USB endpoints). For example, "each USB logical device is composed of a collection of independent endpoints." Universal Serial Bus Specification, Revision 2.0, pg. 33 (April 27, 2000) (last accessed Jan. 15, 2025) (http://www.poweredusb.org/pdf/usb20.pdf). I further note that the endpoint is either "fixed or [] configurable," which I understand as not further

limiting because endpoints must be either fixed or configurable, *i.e.*, there is no other option.

12. Claim 22

a. The system of claim 1, wherein the interaction directly with the base unit further includes presenting the first display device to the processing device.

229. In my view, the combination of Van de Laar and Kaplan disclose this limitation. Van De Laar discloses *presenting the first display device* (*e.g.*, "display screen 111") *to the processing device* (*e.g.*, a "dockee device"). For example:

> [A] dockee device may connect to the video and/or audio stream provided by the WDH that represents the video and/or audio output that is sent by primary dockees to the one or more display and/or audio peripherals, the dockee device rendering the respective stream being received on its screen and/or audio output devices.

Ex-1007, ¶103.

230. I also note that a POSA would recognize that FIG. 1 of Van de Laar shows that data from the Smart Board 110 can flow into the host device 100, which can then flow to the dockee devices 120, 130, 140, which aligns with Van de Laar's disclosure. Ex-1007, FIG. 1; *see also*, *id*., ¶¶96 ("[T]he WDH device is further configured to create and provide a video and/or audio stream representing the video and/or audio output that is sent by primary dockees to the one or more display and/or

audio peripherals. This allows all dockees (primary and secondary) to monitor the merged display output and/or audio output and follow the presentation on their own screen and/or headphones") (emphasis added), 115 ("The WDH provides an A/V stream representing the output being sent by presenter P to the WDH peripherals. This allows the users of the secondary dockee devices to follow the presentation (audio and/or video showing slides, Smartboard contents, chats, etc.) on his or her own portable docking device, in addition to following the presentation by looking at and/or listening to the WDH peripherals").

13. Claim 11

a. A method for connecting a processing device to a functional device connected to or in a base unit of a communications network,

231. *See* claim 1, § IX.B.2.a above.

b. the base unit having a transmitter and a first display device,

232. *See* claim 1, §§ IX.B.2.b and § IX.B.2.c above.

c. the processing device having a memory, a second display device and an operating system, a third party software for a Unified Communication call, and a driver and a client software wherein, the client software, when executed by a processor on the processing device:

233. *See* claim 1, § IX.B.2.e above.

d. interacts directly with the base unit over a wireless connection and provides any simulations or translations, as required, to allow interaction between the first display device and the processing device,

234. *See* claim 1, §§ IX.B.2.e and § IX.B.2.g above.

e. wherein the base unit transmits data over the wireless connection to the processing device,

235. *See* claim 1, § IX.B.2.f above.

f. the client software and a driver, when executed on the processing device, present the functional device to the operating system of the processing device as a virtual functional device,

236. *See* claim 1, § IX.B.2.h above.

g. third party software for a Unified Communication call is presented with the virtual functional device which it then uses for the call,

237. *See* claim 1, § IX.B.2.i above.

h. wherein the processing device hosts the Unified Communication call between two or more processing devices,

238. *See* claim 1, § IX.B.2.j above.

i. wherein the client software is further configured to provide data transformations based on a type of functional data from the at least one functional device to the processing device.

239. *See* claim 1, § IX.B.2.k above.

14. Claim 12

a. The method of claim 11, wherein the client software and the driver present a simulated speakerphone to the operating system thus creating a virtual microphone and a virtual speaker.

240. *See* claim 2, § IX.B.3.a above.

15. Claim 13

a. The method of claim 11, wherein the client software and a driver present a simulated videocam to the operating system thus creating a virtual videocam device.

241. *See* claim 3, § IX.B.4.a above.

16. Claim 14

a. The method of claim 11, wherein the functional data includes video data, optionally obtained by screen scraping, directly to the base unit where it is processed.

242. *See* claims 4-5, §§ IX.B.5.a and IX.B.6.a above.

17. Claim 15

a. The method of claim 14, wherein the data transformations comprises decoding and compositing or decrypting the video data and providing the video data to the first display device.

243. *See* claims 4 and 6, § IX.B.7.a and § IX.B.5.a above.

18. Claim 16

a. The method of claim 11, wherein the functional device which is presented to the operating system as the virtual functional device is any one or more of a data capturing device, a microphone, a speakerphone, a speaker, another display, a touchscreen, a projector, a camera, a video camera, a webcamera.

244. *See* claim 7, § IX.B.8.a above.

19. Claim 17

a. The method of claim 11, further comprising encoding, optionally encrypting the data.

245. *See* claim 8, § IX.B.9.a above.

20. Claim 18

a. The method of claim 11, wherein the virtual functional device is presented to the unified communication between the two or more other processing devices.

246. *See* claim 9, § IX.B.10.a above.

21. Claim 19

a. The method of claim 11, further exposing a same type of functional device to the processing device as is connected to the base unit which is presented to the operating system as a virtual functional device.

247. *See* claim 1, §§ IX.B.2.h and IX.B.2.i above.

22. Claim 20

a. The method of claim 11, further comprising at least one fixed or a configurable endpoint of the virtual functional device, wherein the at least one fixed or a configurable endpoint is a data source or a data sink which stores or emits data of the virtual functional device.

248. *See* claim 10, § IX.B.11.a above.

23. Claim 21

a. The method of claim 12, wherein the interaction directly with the base unit further includes presenting the first display device to the processing device.

249. *See* claim 22, § IX.B.12.a above.

X. CONCLUSION

250. My opinions are based upon the information that I have considered to date. I am unaware of any evidence of secondary considerations with respect to the '346 patent that would render any of the asserted claims non-obvious. I reserve the right, however, to supplement my opinions in the future to respond to any arguments raised by the owner of the '346 patent and to consider new information that becomes available to me.

251. I declare that all statements made herein of my knowledge are true, and that all statements made on information and belief are believed to be true, and that these statements were made with the knowledge that willful false statements and the like so made are punishable by fine or imprisonment, or both, under Section 1001 of Title 18 of the United States Code.

By: Kevin C Almeroth
Kevin C. Almeroth, Ph.D.

Date: February 10, 2025