UNITED STATES PATENT AND TRADEMARK OFFICE

BEFORE THE PATENT TRIAL AND APPEAL BOARD

YEALINK (USA) NETWORK TECHNOLOGY CO., LTD., and
YEALINK NETWORK TECHNOLOGY CO., LTD.
Petitioners,

v.

BARCO N.V.
Patent Owner

U.S. Patent No. 11,258,676
IPR2024-01438

PETITIONER'S REPLY

Table of Contents

Page

I. INTRODUCTION 5

II. BARCO'S CONCERNS WITH DR. ALMEROTH'S TESTIMONY SHOULD NOT BE AFFORDED WEIGHT. 6

III. GROUND I – IT WOULD HAVE BEEN OBVIOUS TO COMBINE ONO AND DEFORCHE. 7

- **A. The POSA Would Have Had a Reasonable Expectation of Modifying Ono to Use a Zero-Footprint Application Like Deforche's.** 8
- **B. There Is No Dispute that Deforche teaches, "*setting up, by means of a pre-installed generic driver of the operating system, a means for communication between the peripheral device and the processing device*"** 9
- **C. Ono Renders Obvious "*screen scraped data*" at Least because Barco Admits It Was Known** 10
- **D. There Is No Credible Dispute that the Combination of Ono and Deforche Renders Obvious, "*running a client application stored on the peripheral device to obtain screen scraped data*"** 12
- **E. The Combination of Ono and Deforche Renders Obvious a Program that "*Does Not Require Installation*," as Recited by Claims 18 and 20.** 13

IV. GROUND II – ONO RENDERS OBVIOUS CLAIM 14 14

- **A. Three Times, The Director Determined that the Yealink Appropriately Used Applicant-Admitted Prior Art ("AAPA").** 14
- **B. Ono Renders Obvious "screen scraped data."** 15

V. GROUND III – IT WOULD HAVE BEEN OBVIOUS TO COMBINE ONO, DEFORCHE, AND GRIMSHAW. 15

- **A. It Would Have Been Obvious to Combine Ono, Deforche, and Grimshaw.** 16
- **B. The Combination of Ono, Deforche, and Grimshaw Renders Obvious "*an input device… that triggers transfer of said user selected arbitrary media content from said***

***processing device to a transmitter and to the wireless communications network*"** 18

1. Ono Discloses the "*an input device… that triggers transfer…*" 19

2. Grimshaw Confirms that It Would Have Been Obvious to Modify Ono to Move Its "*input device*" to Its "*peripheral device.*" 20

VI. GROUND IV – IT WOULD HAVE BEEN OBVIOUS TO COMBINE UCHIDA, DEFORCHE, AND GRIMSHAW. 21

A. The POSA Would Have Had a Reasonable Expectations of Modifying Uchida to Use a Zero-Footprint Application Like Deforche's. 21

B. Uchida's Disclosed Example Implementations Are Not a "Teaching Away" 22

C. The Combination of Uchida and Deforche Renders Obvious "*setting up, by means of the pre-installed generic driver of the operating system, a means for communication between the peripheral device and the processing device.*" 22

D. It Would Have Been Obvious to Apply Grimshaw's Known Technique of Placing an "*input device*" on a "*peripheral device*" to Uchida's Image Projection System Ready for Improvement to Yield the Predictable Result of a "*peripheral device*" comprising "*an input device… that triggers transfer of said user selected arbitrary media….*" 23

E. The Combination of Uchida and Deforche Renders Obvious a Program that "*Does Not Require Installation*," as Recited by Claims 18 and 20. 26

VII. GROUND V – IT WOULD HAVE BEEN OBVIOUS TO COMBINE UCHIDA AND GRIMSHAW 26

VIII. SECONDARY CONSIDERATIONS DO NOT OVERCOME THE STRONG SHOWING OF OBVIOUSNESS 26

A. Barco's ClickShare Product Lacks Nexus because It Is Not Essentially the Claimed Invention. 26

B. Barco Failed to Demonstrate "Commercial Success" Due to the Claimed Features. 28

1. Barco Failed to Show the '676 Patent Covers Crestron's Products. 28

IX. Conclusion 29

LIST OF EXHIBITS

EXHIBIT	DESCRIPTION
EX-1001	U.S. Patent No. 11,258,676
EX-1002	Declaration of Kevin C. Almeroth, Ph.D.
EX-1003	Curriculum Vitae of Kevin C. Almeroth, Ph.D.
EX-1004	File History of U.S. Patent No. 11,258,676
EX-1005	U.S. Patent Application Publication No. 2005/0210390 ("Ono")
EX-1006	U.S. Patent Application Publication No. 2008/0074560 ("Ichieda")
EX-1007	U.S. Patent Application Publication No. 2006/0069840 ("Corbett")
EX-1008	U.S. Patent Application Publication No. 2011/0096138 ("Grimshaw")
EX-1009	English Translation of Japanese Patent Application Publication No. 2008-165007 ("Uchida")
EX-1010	Japanese Patent Application Publication No. 2008-165007
EX-1011	Certification for English Translation of Japanese Patent Application Publication No. 2008-165007
EX-1012	U.S. Provisional Application No. 61/255,326 ("Grimshaw Provisional")
EX-1013	WIPO International Patent Application Publication No. 2010/025557 ("Hill 557")
EX-1014-EX-1019	**RESERVED**
EX-1020	U.S. Patent Application Publication No. 2010/0087139 ("Glass")
EX-1021	U.S. Patent Application Publication No. 2009/0198839 ("Banerjee")
EX-1022	U.S. Patent Application Publication No. 2011/0115689 ("Sugiyama")
EX-1023-Ex-1025	**RESERVED**

EXHIBIT	DESCRIPTION
EX-1026	U.S. Patent Application Publication No. 2009/0172219 ("Mardiks")
EX-1027	U.S. Patent Application Publication No. 2010/0295994 ("Kaplan")
EX-1028-Ex-1029	**RESERVED**
EX-1030	EP Patent Application Publication No. 2107463 ("Deforche")
EX-1031	English Translation of Japanese Patent Application Publication No. 2007-208606 ("Maeda")
EX-1032	**RESERVED**
EX-1033	U.S. Patent Application Publication No. 2002/0196378 ("Slobodin")
EX-1034	U.S. Patent Application Publication No. 2002/0174254 ("Kita")
EX-1035-EX-1049	**RESERVED**
EX-1050	Imation Wireless Projection Link User Guide
EX-1051	EZAir Press Release, "EZAir Wireless PC to TV Solutions Now Available Across Europe," March 16, 2011
EX-1052	Warpia Product Brief, "Wireless USB PC to TV Audio/Video Display Adapter," 2009
EX-1053	Q-Waves Product Overview, "Quicklink TV," November 2010
EX-1054	IOGear Installation Guide, "Wireless USB to VGA Kit," 2008
EX-1055	JP Patent Application Publication No. 2007-208606
EX-1056	Certification for English Translation of JP Patent Application Publication No. 2007-208606
EX-1057	U.S. Patent Application Publication No. 2005/0036509 ("Acharya")
EX-1058	U.S. Patent Application Publication No. 2011/0038005 ("Ochai")
EX-1059-EX-1065	**RESERVED**

EXHIBIT	DESCRIPTION
EX-1066	Portion of ctrl. no. 90/014,087 file history
EX-1067	CSE-800 User Guide
EX-1068	'237 Brogioli report
EX-1069	Clickshare CSE-200 base unit firmware
EX-1070	'002 Brogioli Deposition Transcript
EX-1071	'237 Brogioli Deposition Transcript
EX-1072	'676 Brogioli Deposition transcript
EX-1073	'951 Brogioli Deposition transcript
EX-1074	What is a driver? (https://learn.microsoft.com/en-us/windows-hardware/drivers/gettingstarted/what-is-a-driver-)
EX-1075	ClickShare Button connection issues
EX-1076	ClickShare C-5 Base Unit Datasheet
EX-1077	https://www.barco.com/en/inspiration/news-insights/2019-05-03-different-ways-to-share-your-content-with-clickshare (retrieved September 24, 2025).
Ex-1078	Erwin Six depo. transcript
Ex-1079	Barco Driver Version Installed 18-7-2025 (https://www.barco.com/en/support/knowledge-base/12770-clickshare-windows-driver-version-installed)
Ex-1080	"Why is ClickShare Windows Driver required and how can I install/update it on my PC?" (https://www.barco.com/en/support/knowledge-base/5676-clickshare-windows-driver-requirements-and-installation)
Ex-1081	Minidrivers, Miniport drivers, and driver pairs (https://learn.microsoft.com/en-us/windows-hardware/drivers/gettingstarted/minidrivers-and-driver-pairs)
Ex-1082	Yealink Press Release (https://www.yealink.com/en/product-detail/wireless-presentation-wpp30-eol)

EXHIBIT	DESCRIPTION
Ex-1083	Second Declaration of Declaration of Kevin C. Almeroth, Ph.D.
Ex-1084	Dr. Brogioli Dist. Ct. Transcript
Ex-1085	USB Audio Class System Driver (Usbaudio.sys) (https://learn.microsoft.com/en-us/windows-hardware/drivers/audio/usb-audio-class-system-driver--usbaudio-sys-)
Ex-1086	U.S. Patent No. 10,762,002
Ex-1087	U.S. Patent No. 11,403,237
Ex-1088	**RESERVED**
Ex-1089	U.S. Patent No. 11,422,951
Ex-1090	Deposition transcript of [redacted]
Ex-1091	Deposition transcript of William Scally, Barco's damages expert

I. INTRODUCTION

The Patent Owner's Response ("POR," Paper 15) suffers from three fundamental errors. First, the POR disregards the Petition's reliance on secondary references, such as Grimshaw, when arguing that Ono does not disclose "*an input device... that triggers transfer of data*." This omission is critical: the challenged limitations of the '676 patent were all known in the prior art, and the only substantive issue is whether the proposed combinations would have been obvious.

Second, the POR employs an unduly rigid test for motivation to combine, ignoring the Supreme Court's guidance in *KSR Int'l Co. v. Teleflex Inc.*, 550 U.S. 398, 127 S. Ct. 1727, 1741 (2007), which emphasizes common sense and the simple substitution of known elements. The prior art in screen sharing technology is well-developed, and Barco's patents combine known elements in predictable ways, as detailed in the Petition. Given the agreed-upon high level of skill in the art, a Person of Ordinary Skill in the Art ("POSA") would readily recognize predictable results from combining known elements. Pet., 8. As demonstrated in the Petition, "the prior art as a whole suggested the desirability of the combination …, thus providing a motivation to combine, which need not be supported by a finding that the prior art suggested that the combination claimed by the applicant was the preferred, or most desirable combination over the other alternatives." MPEP § 2143.01.I. Moreover,

the prior art provided clear suggestions and motivations for altering related references to achieve predictable results.

Finally, there should be no presumption of nexus to Barco's product because there are critical unclaimed features, such as the ability of Barco's products to function without a dongle. *See* Ex-1076, Ex-1077. Barco also fails to otherwise demonstrate that any revenue for its product or from its licensee resulted from the claimed features. Therefore, Barco failed to meet its burden to demonstrate secondary considerations.

II. BARCO'S CONCERNS WITH DR. ALMEROTH'S TESTIMONY SHOULD NOT BE AFFORDED WEIGHT.

Barco points to Dr. Almeroth's "data is data" statement (POR, 10-11, citing Ex-2006, IPR2024-01436) from his multiple declarations and depositions to imply inconsistency. However, his comment simply states the well-known fact that all computer data is binary (1's and 0's) and transmitted via interfaces like USB, regardless of type. This does not indicate any deficiency in his expertise.

In another proceeding, Dr. Almeroth testified about prior art addressing transcoding data "based on a type of functional data," demonstrating the routine use of different codecs for audio and video data (Ex. 2030, ¶¶212-213). This is unrelated to his "data is data" comment in the '1436 IPR, which simply reaffirms that all digital data is transmitted as 1's and 0's over interfaces like USB. Barco's claim that Dr.

Almeroth is unclear about the definition of "driver" is unfounded, as he provided a specific definition for this context, and the term varies by context.

Barco spends four pages challenging Dr. Almeroth's view that implementation details are design choices, alleging unreliability and inconsistency (POR, 12-16). This argument improperly limits prior art to explicit disclosures and ignores the flexibility recognized by a person of ordinary skill. As stated in *KSR*, 127 S. Ct. at 1741, courts may consider inferences and creative steps made by such a person. Therefore, Barco's position lacks support under current legal standards. Ex-1083, ¶¶2-5.

III. GROUND I – IT WOULD HAVE BEEN OBVIOUS TO COMBINE ONO AND DEFORCHE.

The Petition explained how and why the POSA would have combined Ono and Deforche. For example, the POSA would have known that they could use ubiquitous pre-installed generic drivers to use a USB interface, as described by Deforche. Pet., 15 (citing EX-1005, ¶¶2, 53-55; EX-1030, ¶¶9, 30; EX-1002, ¶¶116-17). Deforche supports this: "HID and MSD drivers are known per se in the art an[d] therefore need not be described in detail herein." Ex-1030, ¶10; *see also id.*, ¶37. The '676 patent admits to "us[ing] the well-known USB interface of the computer for extracting the display content of the computer" Ex-1001, 4:55-60; *see also* 12:18-21. Using the pre-installed generic driver of an operating system would not only

have been obvious, but likely the first option considered by the POSA because they were so ubiquitous. Ex-.

A. The POSA Would Have Had a Reasonable Expectation of Modifying Ono to Use a Zero-Footprint Application Like Deforche's.

Deforche also teaches a preference to use a zero-footprint application that involves the "use of existing USB class drivers." Ex-1030, ¶¶29-43, 50-51, and FIG. 4a. It also teaches that the zero-footprint application can be any type of application. *Id.*, ¶¶14; *see also* Ex-1072, 6:11-24 (Dr. Brogioli testifying that he did not analyze what "Ono may or may not look like for a zero-footprint software solution"). There is nothing prohibiting implementing Ono's application as a zero-footprint application. The only evidence Barco identifies is Ono's use of the word "install," which according to Barco, means that installation is "required." POR, 25-26. Moreover, Dr. Brogioli testified that installing some software would still meet the claim limitations. Ex-1070, 20:11-24:23 (testifying that Barco's software is zero-footprint despite driver installation); *see also* Ex-1083, ¶¶3-4. Barco's "rigid formula," apparently requiring all limitations to be in a single reference, contravenes common sense application of Deforche's zero-footprint advantages that would have been obvious to apply to Ono's system ready for improvement. *Leapfrog Enterprises, Inc. v. Fisher-Price, Inc.*, 485 F. 3d 1157, 1161 (citing *KSR*, 27 S. Ct. at 1739).

Deforche teaches using zero-footprint applications with existing USB class drivers (Ex-1030, ¶¶29-43, 50-51, FIG. 4a), noting these can be any type of application (*id.*, ¶¶14; *see also* Ex-1070, 35:7-36:19). Nothing prevents implementing Ono's application as zero-footprint. Barco only cites Ono's use of the word "install" to argue installation is required (POR, 25-26), but Dr. Brogioli stated installing software can still meet claim limitations. Ex-1070, 20:11-24:23; *see also* Ex-1083, ¶¶5-10. Barco's approach—requiring all limitations in one reference—ignores the practical application of Deforche's zero-footprint that would have been obvious to apply to Ono's system ready for improvement. *Leapfrog Enterprises, Inc. v. Fisher-P*rice*, Inc.*, 485 F.3d 1157, 116*1,* citing *KSR*, 27 S.Ct. at 1739.

B. There Is No Dispute that Deforche teaches, "*setting up, by means of a pre-installed generic driver of the operating system, a means for communication between the peripheral device and the processing device*"

Dr. Brogioli admits that Deforche teaches this limitation. Ex-1072, 72:13-73:13; *see also* Ex-1030, abstract ("setting up, by means of a pre-installed generic driver of the operating system on the computer device, a modem/host communication interface"). Therefore, the only dispute is whether it would have been obvious to use Deforche's standard pre-installed USB drivers—found in every major operating system—that allow "*communication between the peripheral device and the processing device*" in Ono's system. Such a combination would have been

obvious and likely the first choice of the POSA because the software is so common and ubiquitous.

Barco's argument is simply that Ono does not teach "*a pre-installed generic driver*." POR, 26-27. The entire argument ignores the Petition's argument that, to the extent that Ono's driver is not a pre-installed generic driver, it would have been a simple substitution to use such a driver as taught by Deforche. *Id*.; *see also*, Pet., 23. Indeed, the POR does not reference Deforche at all when making this argument. *Id*. Barco wholly ignored the clear obviousness analysis in the Petition. Swapping Ono's driver for Deforche's would have been a simple substitution using known methods to achieve the predictable result of communicating between a processing device and a peripheral device. Ex-1083, ¶¶11-17 ; *see also In re O'Farrell*, 853 F.2d 894, 903, 7 USPQ2d 1673, 1681 (Fed. Cir. 1988) (citations omitted) (The claimed method would have been obvious because one reference contained a detailed enabling methodology, a suggestion to modify the prior art to produce the claimed invention, and evidence suggesting the modification would be successful.).

C. Ono Renders Obvious "*screen scraped data*" at Least because Barco Admits It Was Known

The Petition explained that Ono teaches a peripheral device storing a client application "*to obtain screen scraped data*." Pet., 24-25. Ono discloses obtaining a car image from information terminal 2a and displaying it on image display apparatus 1. *Id*., 25 (citing Ex-1005, ¶¶ 41, 54-55, 58, 73, 76, 88, FIGS. 1 and 4).

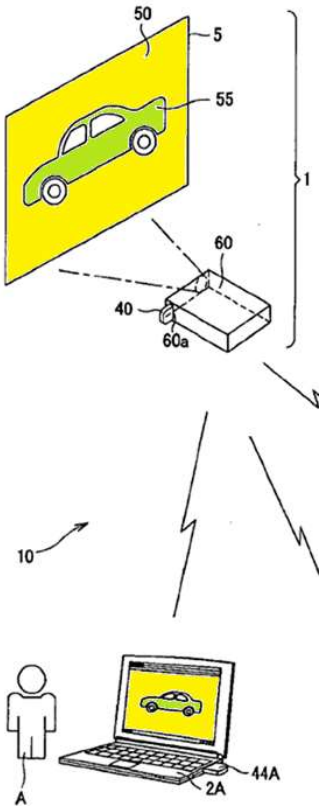

Ex-1005, FIG. 1

Ono further discuses "the information terminal apparatus whose image is to be shown on the screen 5," due to Ono's screen scraping algorithm. *Id*. ¶161. Moreover, Dr. Brogioli performed no analysis of whether Ono disclosed this limitation. Ex-1072, 5:23-6:4.

To the extent that "*screen scraped data*" is limited to a specific way of obtaining media data from a screen, the '676 patent admits that screen scraping was known in the art. Ex-1001, 13:59-62 (citing Ex-1033 (Slobodin)). In addition to disclosing screen scraping, Slobodin discloses that its screen scraping logic can be implemented on a system like Ono's. Ex-1033, ¶73. The POSA would have found it

obvious to apply the applicant-admitted prior art ("AAPA") screen scraping logic of Slobodin to Ono's system ready for improvement to yield the predictable result of scraping, for example, a car image from a computer display for use on a larger display. Therefore, because Ono teaches displaying a car and reproducing the same image on a projector, it would have been obvious that Ono discloses screen scraping, such as that disclosed by Slobodin. Pet., 24-25 (citing Ex-1033); Ex-1083, ¶¶18-20.

D. There Is No Credible Dispute that the Combination of Ono and Deforche Renders Obvious, "*running a client application stored on the peripheral device to obtain screen scraped data*"

Deforche expressly discloses "*running a client application stored on the peripheral device*" that also has the transmitter:

> At this point, the USB modem presents itself as a USB Mass Storage Device (10) presenting a CD Rom (exposing flash memory)[,] the CD Rom has an autorun that launches <u>a launcher in which the user has the possibility to launch amongst other applications</u> a web browser (e.g. Firefox) and a Connection Manager (CM). This launcher is based on portable application principles, as it is also done with other applications.

Ex-1030, ¶34 (emphasis added); *see also* ¶¶15-19, 25-34, 41, 45, and 47-52; and Pet., 24-27. The combination of Ono and Deforche renders obvious launching an application stored on a peripheral device containing an application. According to Deforche, the application could be any application, including Ono's screen scraping application. Ex-1030, ¶34. The combination would require simply placing Ono's

screen scraping application on the peripheral device, as taught by Deforche. *Id.*; Ex-1083, ¶¶21-23.

E. The Combination of Ono and Deforche Renders Obvious a Program that "*Does Not Require Installation*," as Recited by Claims 18 and 20.

Ono's use of the word "install" does not mean it requires installation. Barco's sole argument for why the POSA would not modify Ono to use Deforche's teaching of a portable application is that Ono uses the word "install." Deforche provides substantial teachings, suggestions, and motivations for modifying Ono's similar device using Deforche's known portable application to obtain the predictable result of changing Ono's application to be zero-footprint:

> Problem Definition: to provide a way to achieve USB (or other interface) modem functionality in any computer (Operating system independent) without leaving a footprint (Zero-Footprint). This means that the need can be avoided to install drivers and/or applications on PC's to give USB modem connectivity. This also means that the need can be avoided for the end user to have administrator rights on the computer. An advantage is the ease of use of e.g. USB modem products which can even be allowed usage in restricted conditions. The invention can give the end user connectivity on any personal computer (PC) without interfering on the PC itself.
>
> A preferred solution according to the invention is to combine existing standard methods found in current Operating Systems (OS) to achieve the Zero Footprint objective.

Ex-1030, ¶¶28-29; *see also* ¶¶16 ("As used herein, this effect is termed a 'zero footprint', i.e. the wireless modem device leaves no trace or a 'zero footprint' on the computer device."), 29, 31-36, 40 ("The Zero Footprint concept doesn't impose any special requirements on the storage used."), ¶50 ("It is preferred to use portable applications which run from the modem device without the need to install anything on the host (ideally, also no registry change is allowed). For applications to be able to run on the ZeroFootprint mode, support for communication with the proxy is provided."). Dr. Brogioli identifies no compelling teaching away argument or substantial technical hurdles other than Ono's use of the word "install." Moreover, Dr. Brogioli testified that installing some software would still meet the claim limitations. Ex-1070, 20:11-24:23. Dr. Almeroth, too, identifies no technical challenges. Ex-1083, ¶¶24-28. Therefore, Deforche's work on portable applications provides incentives to modify Ono to install software on USB memory instead of local storage.

IV. GROUND II – ONO RENDERS OBVIOUS CLAIM 14

Claim 14 is like independent claims 1 and 16 but lacks the pre-installed generic driver.

A. Three Times, The Director Determined that the Yealink Appropriately Used Applicant-Admitted Prior Art ("AAPA").

Barco repeats arguments previously rejected by the Director three times, offering no new basis for reconsideration. *See* IPR2025-00491, Paper 18 (PTAB

June 24, 2025); IPR2025-00597, Paper 10 (PTAB July 17, 2025); IPR2025-00598, Paper 11 (PTAB July 17, 2025). Barco also ignores the controlling precedent from *Shockwave Medical, Inc. v. Cardiovascular Systems, Inc.*, 142 F. 4th 1371, 1380 (Fed. Cir. 2025), where AAPA was properly cited as background knowledge. Neither Yealink nor the Board identified AAPA as the "basis" in the institution decision (Paper 7, 5).

Ground	Claim(s) Challenged	35 U.S.C. §	Basis
1	1, 5, 8, 18, 20	103(a)[1]	Ono,[2] Deforche[3]
2	14	103(a)	Ono
3	4, 16, 19	103(a)	Ono, Deforche, Grimshaw[4]
4	1, 4, 5, 8, 16, 18–20	103(a)	Uchida,[5] Deforche, Grimshaw
5	14	103(a)	Uchida, Grimshaw

There is no reason to reverse the Director's three other decisions and Federal Circuit precedent.

B. Ono Renders Obvious "screen scraped data."

See § III.B, supra.

V. GROUND III – IT WOULD HAVE BEEN OBVIOUS TO COMBINE ONO, DEFORCHE, AND GRIMSHAW.

Barco first refers to the same arguments from Ground 1, which Yealink addressed in § III.A, supra.

A. It Would Have Been Obvious to Combine Ono, Deforche, and Grimshaw.

Ono and Grimshaw disclose similar ways of achieving the same objective, *i.e.*, transmitting screen scraped data to a larger display. Ono discloses a remote control or buttons on a projector to select the source of the screen scraped data. Ex-1005, ¶¶83, 161. Grimshaw discloses buttons on peripheral devices for doing the same. Ex-1008, ¶19. It would have been obvious to transfer screen scraped data using either method because there were a finite number of identified, predictable solutions for triggering the transfer, each with the predictable result of transmitting screen scraped data for display.

Ono acknowledges that it would be possible "for each presenter to carry out output on/off operations at each information terminal apparatus." Ex-1005, ¶161. The full quote is as follows:

> since the information terminal apparatus whose image is to be shown on the screen 5 can be switched merely by operations from the remote controller 69 of the image display apparatus 1, even in cases, for example, where there are a plurality of presenters who are to present in a given order, <u>it is unnecessary for each presenter to carry out output on/off operations at each information terminal apparatus</u> in accordance with the order, and therefore, the gap in time until the next presentation is eliminated, and presentations can be conducted speedily.

Id. (emphasis added); *see also* ¶144. This is not a teaching away because the fact "that 'better alternatives exist in the prior art does not mean that an inferior combination is inapt for obviousness purposes.' " *Bayer Pharma AG v. Watson Lab'ys, Inc.*, 874 F.3d 1316, 1327 (Fed. Cir. 2017) (quoting *In re Mouttet*, 686 F.3d 1322, 1334 (Fed. Cir. 2012)); *see also Meiresonne v. Google, Inc.*, 849 F.3d 1379, 1382 (Fed. Cir. 2017) ("A reference that 'merely expresses a general preference for an alternative invention but does not criticize, discredit, or otherwise discourage investigation into' the claimed invention does not teach away." (quoting *Galderma Labs., L.P. v. Tolmar, Inc.*, 737 F.3d 731, 738 (Fed. Cir. 2013))).

In *Meiresonne*, the prior art reference explained that graphical webpage previews were preferred over text because the user could "quickly filter through the vast information available from the simplest of searches," … and the addition of graphical previews makes web browsing "easier and more useful, even for the novice." *Meiresonne*, 849 F.3d at 1383. The reference also identified "drawbacks" with descriptive text summaries. *Id*., 1381. These "drawbacks" did not constitute a teaching away:

> The fact that Finseth describes descriptive text as "[o]ften[ ] ... cursory, if not cryptic" does not automatically convert the reference to one that teaches away from combining text descriptions with a rollover window. This description implies only that text descriptions may be incomplete or insufficient to fully understand the content.

> Finseth does not say or imply that text descriptions are "unreliable," "misleading," "wrong," or "inaccurate," which might lead one of ordinary skill in the art to discard text descriptions completely. The word "cursory" implies that the information is accurate but could use supplementation—it does not demand replacement.

Id. Here, too, Ono discusses a "gap in time" when switching the display by using "on/off operations at each information terminal apparatus." Ex-1005, ¶¶144, 165. This gap in time is not a teaching away because allowing the presenter to switch control using the peripheral device would not render Ono "inoperative for its intended purpose" of allowing a plurality of computers to share their screens. *Id*., 1384 (Fed. Cir. 2017); Ex-1005, ¶2; Ex-1083, ¶¶32-35.

B. The Combination of Ono, Deforche, and Grimshaw Renders Obvious "*an input device… that triggers transfer of said user selected arbitrary media content from said processing device to a transmitter and to the wireless communications network*"

Barco's proposed two arguments focusing on Ono and Grimshaw alone as failing to teach the limitation, ignoring the combination proposed by the Petition:

> 1. Ono's remote does not trigger content transfer
>
> * * * *
>
> 2. Grimshaw Does Not Include Peripheral Devices that Trigger Transfer of Content

POR, 39-40. Neither argument is right, but more importantly, the arguments fail to address the combination proposed in the Petition. Ex-1083, ¶36.

1. Ono Discloses the "*an input device… that triggers transfer…*"

FIG. 9 of Ono indisputably illustrates a process that begins with a user pressing a button followed by an "image transfer" from a PC to a projector. The fact that a connection might fail in some circumstances is irrelevant. Indeed, the '676 patent explains that its connection will fail in some instances:

> When the button was previously in state "connected" (see FIG. 6), it will check the state of the base unit (P). If the base unit is not in state "full", the peripheral device will send the screen scraped arbitrary media content to the base unit (B), which will add the media content to the composition on the central display.

The connection will fail when the base unit is in the "full" state. Ex-1072, 31:19-34:22 (discussing Ex-1067, 43-44 (sometimes "you are blocked" from connecting)); Ex-1073, 4:25-7:2 (Dr. Brogioli testifying on other ways Barco's product could fail to connect), 9:10-10:25 (discussing the same regarding the how the embodiments of the '237 patent may also fail). Indeed, Barco's system could fail in several ways. Ex-1075. Therefore, the claims of the '676 patent do not require 100% reliability when actuating the input device to trigger a transfer.

As just explained, Ono itself discloses the possibility of using a button "for each presenter to carry out output on/off operations at each information terminal apparatus." Ex-1005, ¶161. Grimshaw supports the idea that Ono can have a button "at each information terminal apparatus." *Id.*, Ex-1083, ¶¶37-38.

2. Grimshaw Confirms that It Would Have Been Obvious to Modify Ono to Move Its "*input device*" to Its "*peripheral device*."

Grimshaw similarly discloses *peripheral devices* (*e.g.*, user modules 14-20) comprising "*input devices*" (*e.g.*, buttons 344-374). Ex-1008, ¶19. Barco argues that the POSA would not combine Ono and Grimshaw because one embodiment of Grimshaw discloses,

> When separate devices are vying for control of the display module, "by respectively engaging buttons 344, 354, 364, 374" users cause "the switch controller 318 to pass the data signals from the selected user module on the display module." Ex. 1008, ¶19; Ex. 2004, ¶127. In other words, the buttons do not trigger data transfer from the transmitter, they merely instruct the switch controller which data signal should be routed to the display. Ex. 2004, ¶129.

POR, 40. This argument fails for several reasons. First, the Petition relied on Ono's disclosure of triggering the "*transfer*." Pet., 39-40.

Second, There is no technical reason why Grimshaw would not have been implemented such that pressing buttons 344-374 "*triggers transfer of said user selected arbitrary media content from said processing device to a transmitter and to the wireless communications network*" at least because Ono describes that option. Ex-1083, ¶¶39-42. Further, Grimshaw states its disclosure is non-limiting. Ex-1008, ¶¶19 (additional embodiments of switch controller 318), 20 (additional

embodiments of controller 324), 26 (disclosing examples of how data could be transferred from a laptop to a display), 43, and claim 9.

Third, Grimshaw's FIG. 4 illustrates a process by which a "User Pushes Button on User Module" (step 402), and after a series of steps "a communication session using communication system 10 can proceed, step 422." Therefore, pressing the button in that example directly results in the triggering limitation.

To conclude, the Petition relied on Ono's teaching of "*an input device… that triggers transfer*" and Grimshaw for its teaching that it would be obvious that the "peripheral device" may comprise the "*input device.*" Pet., 39-41. Barco misrepresents Yealink's arguments by focusing on the references individually; Barco failed to consider fully the disclosures of Ono and Grimshaw together as presented in the Petition.

VI. GROUND IV – IT WOULD HAVE BEEN OBVIOUS TO COMBINE UCHIDA, DEFORCHE, AND GRIMSHAW.

Barco makes similar arguments for the Ono- and Uchida-based grounds and wrongly focuses on teachings of individual limitations and not the combination.

A. The POSA Would Have Had a Reasonable Expectations of Modifying Uchida to Use a Zero-Footprint Application Like Deforche's.

Like the Ono-based ground discussed in §§ III.A-B, above, Barco focuses on Uchida's discussion of installing software to argue that Uchida does not disclose it would function in combination with Deforche. POR, 42. There is nothing prohibiting

implementing Uchida as a zero-footprint application. The only evidence Barco identifies is Uchida's use of the word "install," which according to Barco, means that installation is "required." *Id*. Barco's "rigid formula," apparently requiring all limitations to be in a single reference, contravenes common sense application of Deforche's zero-footprint advantages that would have been obvious to apply to Uchida's system ready for improvement. *Leapfrog Enterprises, Inc. v. Fisher-Price, Inc.*, 485 F. 3d at 1161 (citing *KSR*, 27 S. Ct. at 1739); Ex-1083, ¶¶44-45.

B. Uchida's Disclosed Example Implementations Are Not a "Teaching Away"

Barco cites no case law stating that example implementations constitute a teaching away. POR, 42-45. The case law instead holds a teaching away must clearly "discourage" the proposed combination. *In re Gurley*, 27 F. 3d 551, 553 (Fed. Cir. 1994) Even if the Uchida's embodiment did discourage a zero-footprint, which it does not, the claims do not recite any "discovery beyond what was known to the art." *Id*. Ex-1083, ¶¶46.

C. The Combination of Uchida and Deforche Renders Obvious "*setting up, by means of the pre-installed generic driver of the operating system, a means for communication between the peripheral device and the processing device*."

Barco's argument concerning this limitation is like that of the combination of Ono and Grimshaw. See § III.B. There, Yealink demonstrated that Dr. Brogioli admits that Deforche teaches this limitation. Ex-1072, 72:13-73:13. Just as with the

Ono-Deforche combination, Barco ignores the Petition's argument that it would have been obvious to use Deforche's teachings of "*setting up, by means of a pre-installed generic driver of the operating system on the computer device, a modem/host communication interface*." Uchida specifically discloses using a driver to set up a means for communication, and there is no reason why that driver cannot be Deforche's "*pre-installed generic driver*." Ex-1009, ¶¶9, 48, 79-83, 153, 165-65, FIGS. 7 and 18; Ex-1083, ¶47.

D. It Would Have Been Obvious to Apply Grimshaw's Known Technique of Placing an "*input device*" on a "*peripheral device*" to Uchida's Image Projection System Ready for Improvement to Yield the Predictable Result of a "*peripheral device*" comprising "*an input device… that triggers transfer of said user selected arbitrary media….*"

Barco uses the same baseless argument that Uchida implements its system in one way, and there is no reason to alter it. This is not the law. Rather, the obviousness analysis is "expansive and flexible," where the Board "can consider the inferences and creative steps a person of ordinary skill in the art would employ." *KSR*, 27 S. Ct. at 1731. Limiting prior art disclosures to their specific embodiments "makes little sense." *Id*., 1742. "The test for obviousness is not whether the features of a secondary reference may be bodily incorporated into the structure of the primary reference." *Facebook, Inc. v. Windy City Innovations, LLC*, 973 F.3d 1321, 1343 (Fed. Cir. 2020) (quoting *In re Keller*, 642 F.2d 413, 425 (C.C.P.A. 1981)).

It is important that market "incentives" prompted many different tools for sharing content in online conferences. *Id*., 1371, 1373, 1740, 1744. The '676 patent spends about four columns discussing the background of the large market for online meeting technology in 2011. Ex-1001, 1:28-5:25, 1:60-64 ("Electronic meeting support systems, such as interactive network-connected white boards and videoconferencing appliances, are available for the benefit of those who share the same room as well as those who are in remote locations.")

In systems like those of the '676 patent, Uchida, and Grimshaw, there are a finite number of locations to place an "*input device*." Uchida discloses it being on the remote control, while Grimshaw teaches it on a "peripheral device." In both cases, pressing the "*input device … triggers transfer … from said processing device to a transmitter and to the wireless communications network*." Grimshaw discloses one example of pressing a "button" ("*input device*") that causes a switch controller 318 to complete transfer of "*arbitrary media content*" from a "user module" ("*peripheral device*") to the "display module" ("*base unit*"). There is no reason to limit Grimshaw to this single embodiment, and the Petition relied on Uchida's transfer of content. It would require only ordinary skill, which is set at a high level in this case, for the POSA to modify Uchida to include an *input device being an actuator coupled to the peripheral device*" like Grimshaw's. Ex-1083, ¶¶48-49; Ex-1083, ¶¶48-49.

a. Uchida's transfer stop switch *does* trigger content transfer

Barco makes the additional incorrect argument "Uchida's transfer stop switch does not trigger content transfer." POR, 47. Firstly, Dr. Brogioli admitted that "when the toggle is turned back to 'off,' the image data coming from the wireless device is projected again." Ex-1072, 3:3-12.

Secondly, Uchida teaches that after activating "image transfer stop switch 140" the client computer "executes an image transfer application and transmits a request to the image projection device 3 … to project a specific image … on the image projection 50 device 3." Pet., 57–58 (citing, Ex-1009, ¶71). Petitioner further combined Uchida with Grimshaw to render obvious that multiple users can push a button on user modules to trigger transmission of image data. Pet., 47–49; Ex-1083, ¶¶50-51.

> a user may engage or push a button 344, 354, 364, 374 on their user module in order to take control of display module 22 (e.g., display module 22 could show whatever is currently being displayed on the screen of the laptop computer connected to the selected user module).

Ex-1008, ¶¶19-20. Therefore, the combination of Uchida and Grimshaw renders obvious the "input device" limitation.

E. The Combination of Uchida and Deforche Renders Obvious a Program that "*Does Not Require Installation*," as Recited by Claims 18 and 20.

Barco's argument here fails for the same reasons discussed above regarding Ono and Deforche. See § III.E, above. Similarly, Uchida's use of the word "install" does not mean it requires installation. Also, Deforche's work on portable applications provides incentives to modify Uchida's image transfer application to be predictably installed on USB memory instead of local storage. Ex-1083, ¶52.

VII. GROUND V

Barco waived arguments for Ground V.

VIII. SECONDARY CONSIDERATIONS DO NOT OVERCOME THE STRONG SHOWING OF OBVIOUSNESS

Barco's patentability arguments are weak and rely on features already in the prior art. Their rationale for combining elements is unsupported by law, and they have not shown a nexus for any claimed commercial success.

A. Barco's ClickShare Product Lacks Nexus because It Is Not Essentially the Claimed Invention.

Barco cannot claim a presumption of nexus when the patented invention is only a component of a commercially successful product, unless unclaimed features are insignificant. *See Demaco Corp. v. F. Von Langsdorff Licensing Ltd.*, 851 F.2d 1387, 1392 (Fed. Cir. 1988); *Fox Factory, Inc. v. SRAM, LLC*, 944 F.3d 1366, 1374 (Fed. Cir. 2019).

Barco's ClickShare product is not coextensive with the claimed invention because it includes significant unclaimed features. For example, the ClickShare product can work with or without a peripheral device (dongle) by using either the ClickShare app or other platforms, such as Teams or Zoom. Ex-1076 (Barco base unit sold without dongles and works with Teams and Zoom); Ex-1077 (Barco instructions for using a base unit without a dongle). Indeed, [redacted] Ex-1090, 100:25-101:20. Dr. Brogioli could not even recall ever using a dongle to share content prior to this case. Ex-1084, 91:14-23. Using the ClickShare Product without the dongle is not an insignificant feature; nexus, therefore, cannot be presumed.

Barco holds several patents for distinct inventions, including U.S. Patent Nos. 10,762,002 (the '002 patent, Ex-1086), 11,403,237 (the '237 patent, Ex-1087), 11,422,951 (the '951 patent, Ex-1089), and the '676 patent (Ex-1001). Only the '951 patent has a terminal disclaimer, and it is over a different application. Barco's testimony indicates [redacted] Ex-1078, 141:20-143:18. Each patent covers different features—media sharing methods ('002), network connectivity via a peripheral device ('237), meeting systems for sharing content ('676), and wireless

media display tools ('951)—meaning none is coextensive with the ClickShare product, which relies on multiple critical features covered by several patents.

B. Barco Failed to Demonstrate "Commercial Success" Due to the Claimed Features.

Barco's evidence of revenue alone does not establish secondary considerations without showing it is the "direct result" of the claimed features. *See In re Huang*, 100 F.3d 135, 140 (Fed. Cir. 1996). Barco relied solely on a presumption of nexus and did not show revenue was due to the claimed features rather than significant unclaimed ones. It is not possible to separate revenue from claimed and commonly used features, such as compatibility with Teams and Zoom. Yealink ceased selling dongles in the U.S. but continues selling base units, indicating base units retain value without dongles. Ex-1082. Barco's products also function without a dongle or peripheral device. Ex-1076, Ex-1077. Barco does not show how much revenue is tied to the claimed features versus unclaimed ones.

1. Barco Failed to Show the '676 Patent Covers Crestron's Products.

As for Barco's reliance on Crestron's products, Barco must show more than the mere existence of a license. *See Sibia Neurosciences, Inc. v. Cadus Pharm. Corp.*, 225 F.3d 1349, 1358 (Fed. Cir. 2000) ("[T]he mere existence of these licenses is insufficient to overcome the conclusion of obviousness ...."); *see also Merck & Cie v. Gnosis S.P.A.*, 808 F.3d 829, 838 (Fed. Cir. 2015) ("It is therefore difficult to

determine the extent to which the licensing agreement was a result of the novel features in the [challenged] patent, as opposed to the other patents involved."). Yet Barco offers little beyond just that. In fact, the Crestron license included [redacted] *See* Ex-2011, 15. Moreover, Barco's damages expert, when addressing the same license, [redacted] *See, e.g.*, Ex. 1091, 73:7-74:3, 105:8-106:1. [redacted] Ex-1090, 58:7-12.

There is no evidence that Crestron entered the license because it believed that Barco's patents were valid or enforceable. *Teva Pharms. Int'l GmbH v. Eli Lilly & Co.*, 8 F.4th 1349, 1364 (Fed. Cir. 2021). The Federal Circuit affirmed a Board decision holding the Patent Owner did not show "that any of the challenged patents cover the [licensee's] Product by a comparison of the [ ] product to the challenged claims." *Id*. Here, too, Barco fails to explain how Crestron's products embody the claim limitations. Therefore, there is insufficient evidence of a nexus.

IX. CONCLUSION

Barco does not overcome the showing of obviousness, and secondary considerations are lacking. The Board should find the challenged claims unpatentable.

Dated: October 15, 2025 Respectfully submitted,

By: /Stephen Yang/
Stephen Yang
Reg. No. 70,589
Dentons US LLP

Lead counsel for Petitioner

CERTIFICATE OF COMPLIANCE

Pursuant to 37 C.F.R. § 42.24(d), the undersigned hereby certifies that the word count for the foregoing Petitioner's Reply totals 5,498 as counted by Word Count feature of Microsoft Word, which is less than 5,600 allowed under 37 C.F.R. § 42.24(a)(1)(i), excluding the parts of the paper exempted by 37 C.F.R. §42.24(a).

Dated: October 15, 2025

By: /Stephen Yang/
Stephen Yang
Reg. No. 70,589

CERTIFICATE OF SERVICE

I hereby certify that on October 15, 2025, I caused a true and correct copy of the foregoing Petitioner's Reply and supporting exhibits to be served on the Patent Owner at the following correspondence addresses of record:

akavathekar@hsml.com
christopher.centurelli@klgates.com
erik.halverson@klgates.com
joshua.andrews@klgates.com
tlee@hsml.com

Dated: October 15, 2025

Respectfully submitted,

/Stephen Yang/
Stephen Yang
Reg. No. 70,589
Attorney for Petitioner