US 20100302454A1

(19) United States

(12) Patent Application Publication

Epstein et al.

(10) Pub. No.: US 2010/0302454 A1

(43) Pub. Date: Dec. 2, 2010

(54) PERSONAL CONTROL APPARATUS AND METHOD FOR SHARING INFORMATION IN A COLLABORATIVE WORKSPACE

(76) Inventors: **Lewis Epstein**, San Mateo, CA (US); **Brett Kincaid**, Lowell, MI (US); **Hyun Yoo**, Grand Rapids, MI (US); **Suzanne Stage**, San Francisco, CA (US); **Lukas Scherrer**, San Francisco, CA (US); **Larry Cheng**, Palo Alto, CA (US)

Correspondence Address:
QUARLES & BRADY LLP
411 E. WISCONSIN AVENUE, SUITE 2040
MILWAUKEE, WI 53202-4497 (US)

(21) Appl. No.: **12/474,670**

(22) Filed: **May 29, 2009**

Publication Classification

(51) **Int. Cl.**
H04N 5/268 (2006.01)

(52) **U.S. Cl.** **348/705**; 348/E05.057

(57) **ABSTRACT**

A method and apparatus for selecting information from a video source to be displayed on at least a first common display screen in a collaborative workspace having a switching device, the method comprising the steps of providing a selectable control interface that includes at least one indicator that can indicate at least first and second different states, associating a video source with the switching device so that video information from the video source is presented to the switching device, when the video source is associated with the switching device, causing the at least one indicator to indicate a first state and when the selectable control interface is selected, causing the at least one indicator to indicate the second state and providing the video information from the video source to the common display screen via the switching device.

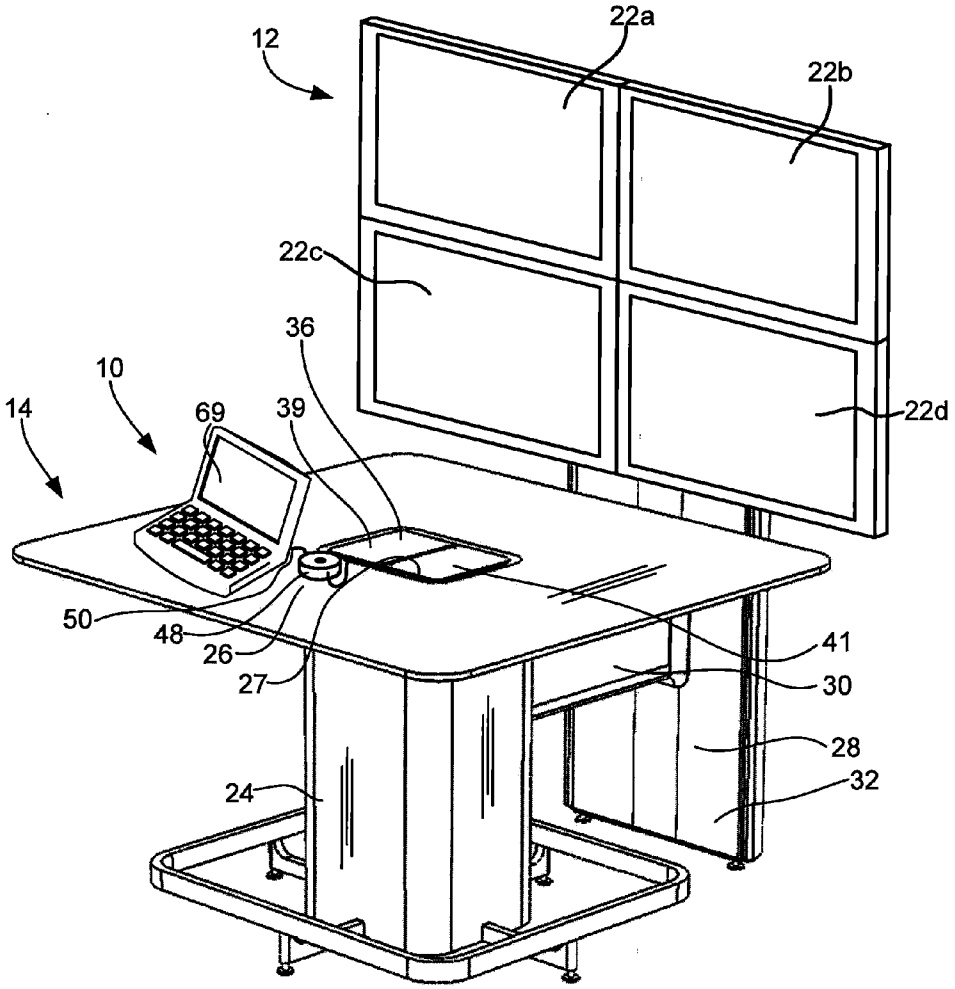

Barco Exhibit 2003

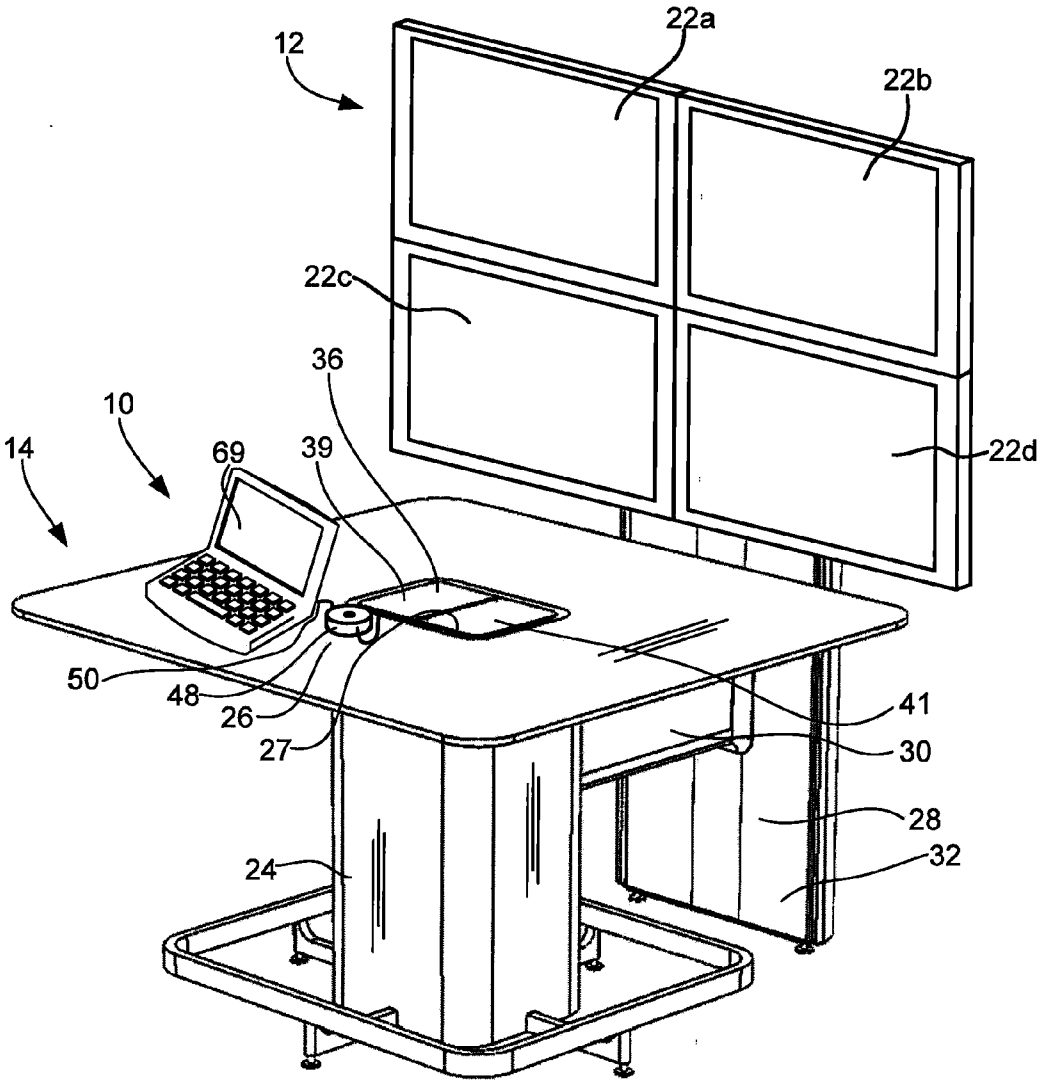

Fig. 1

Barco Exhibit 2003

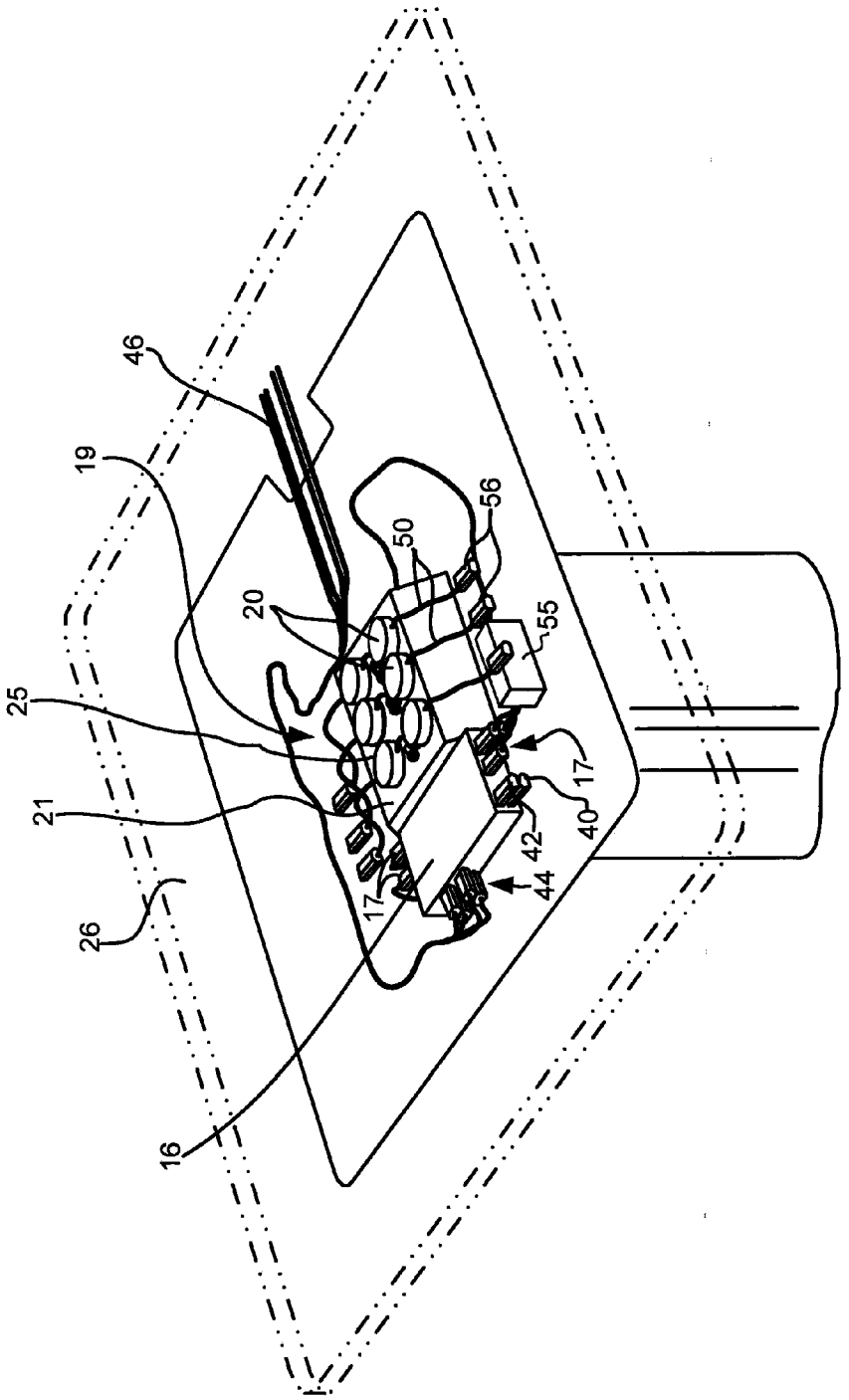

Fig. 2

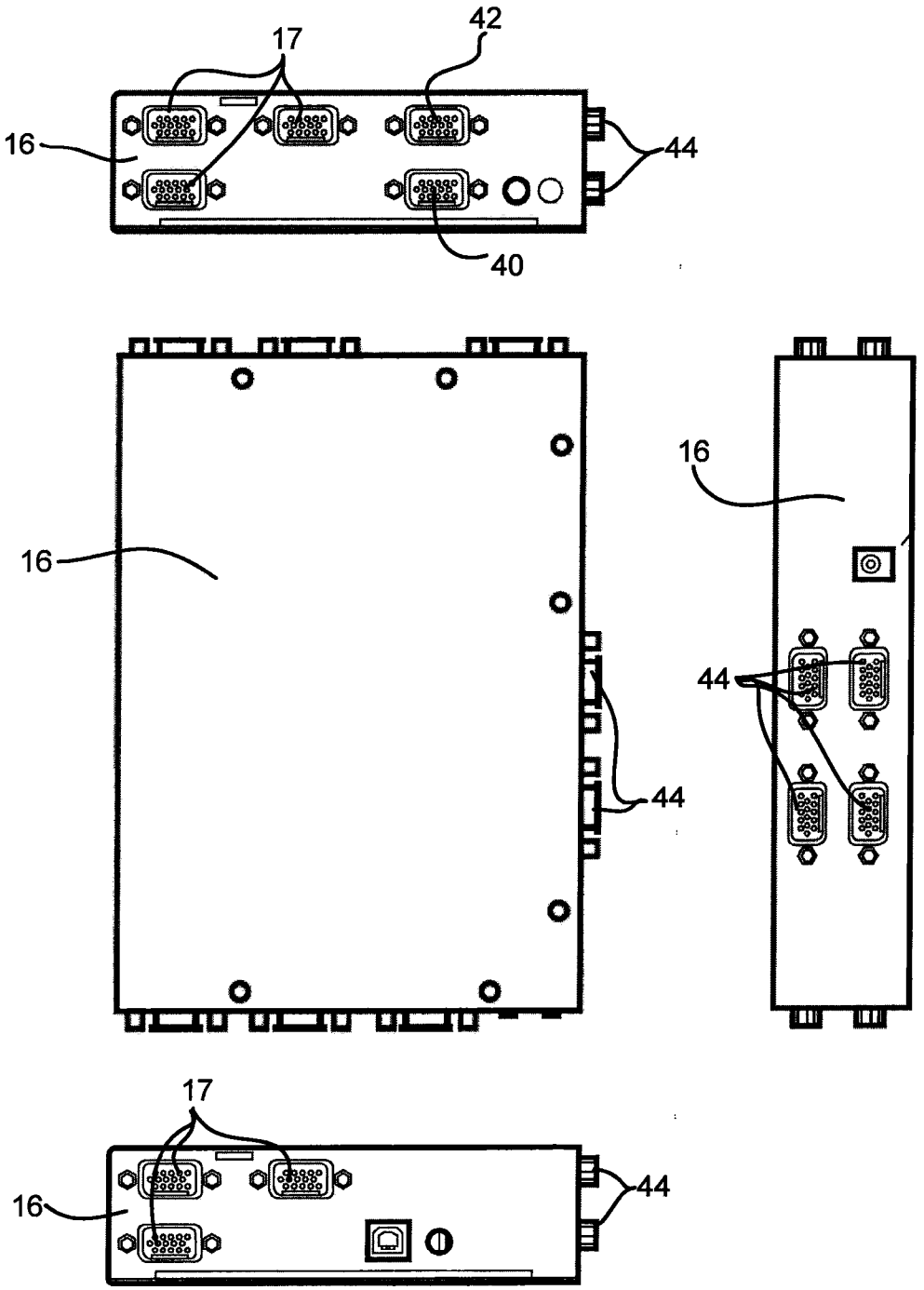

Fig. 3

Barco Exhibit 2003

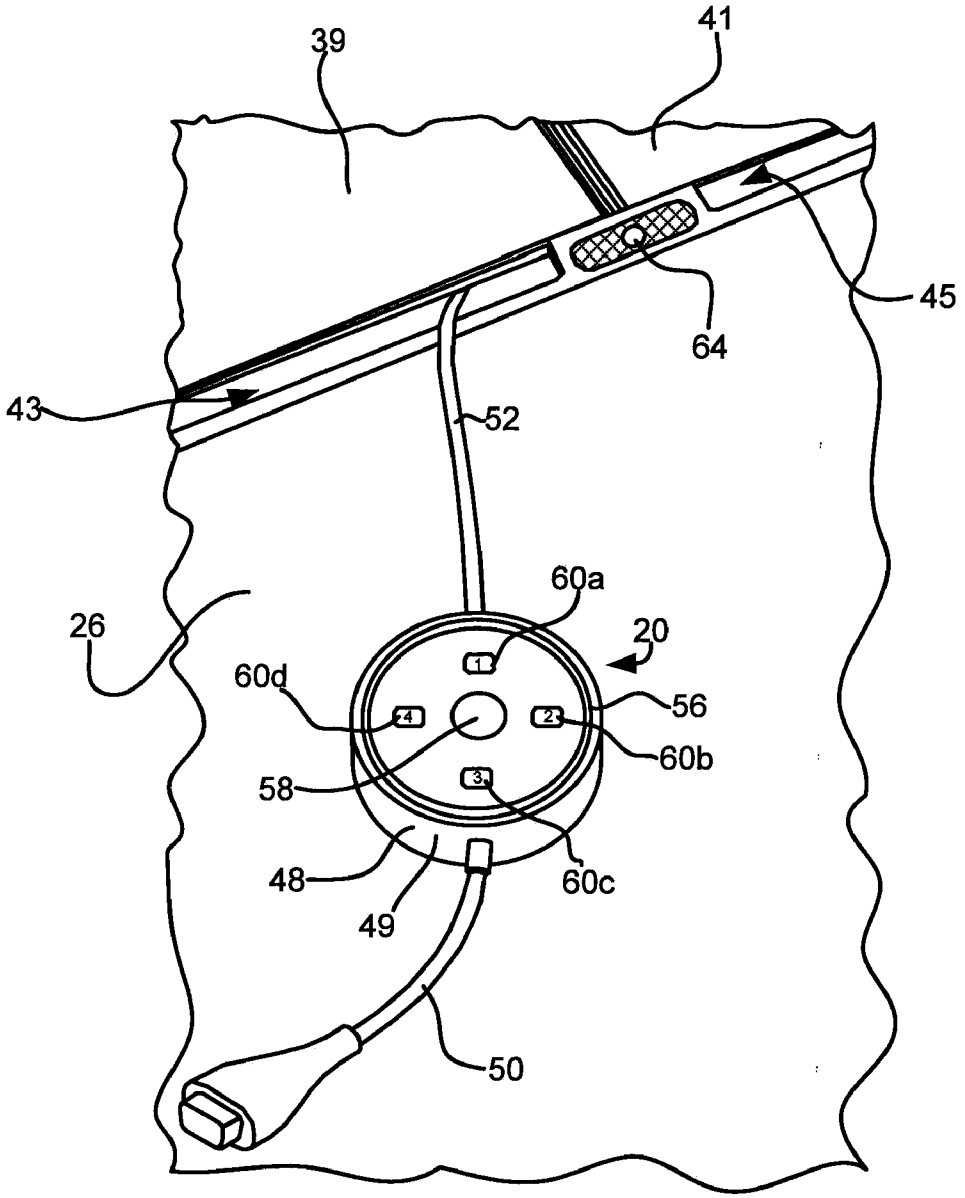

Fig. 4

Barco Exhibit 2003

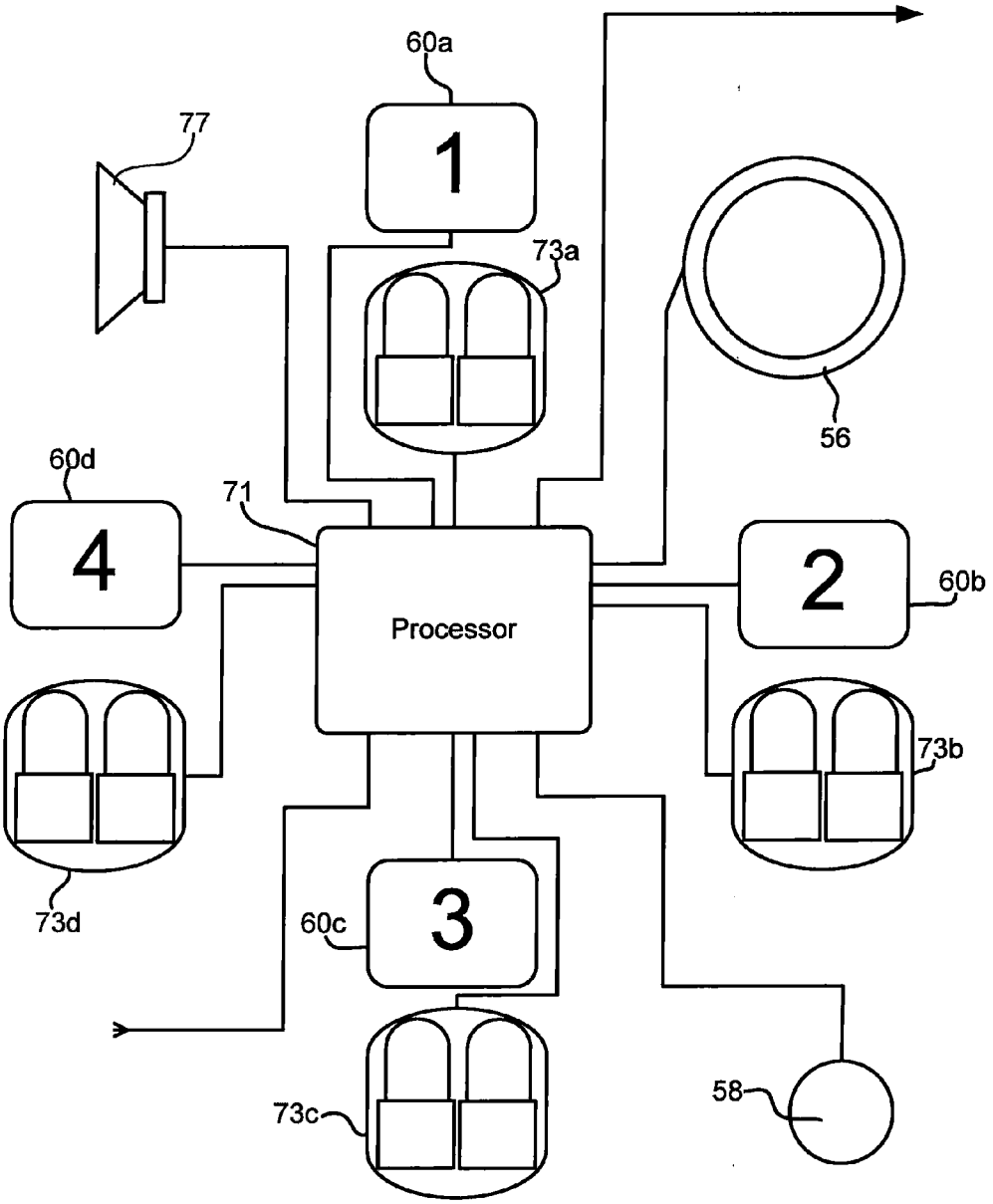

Fig. 5

Barco Exhibit 2003

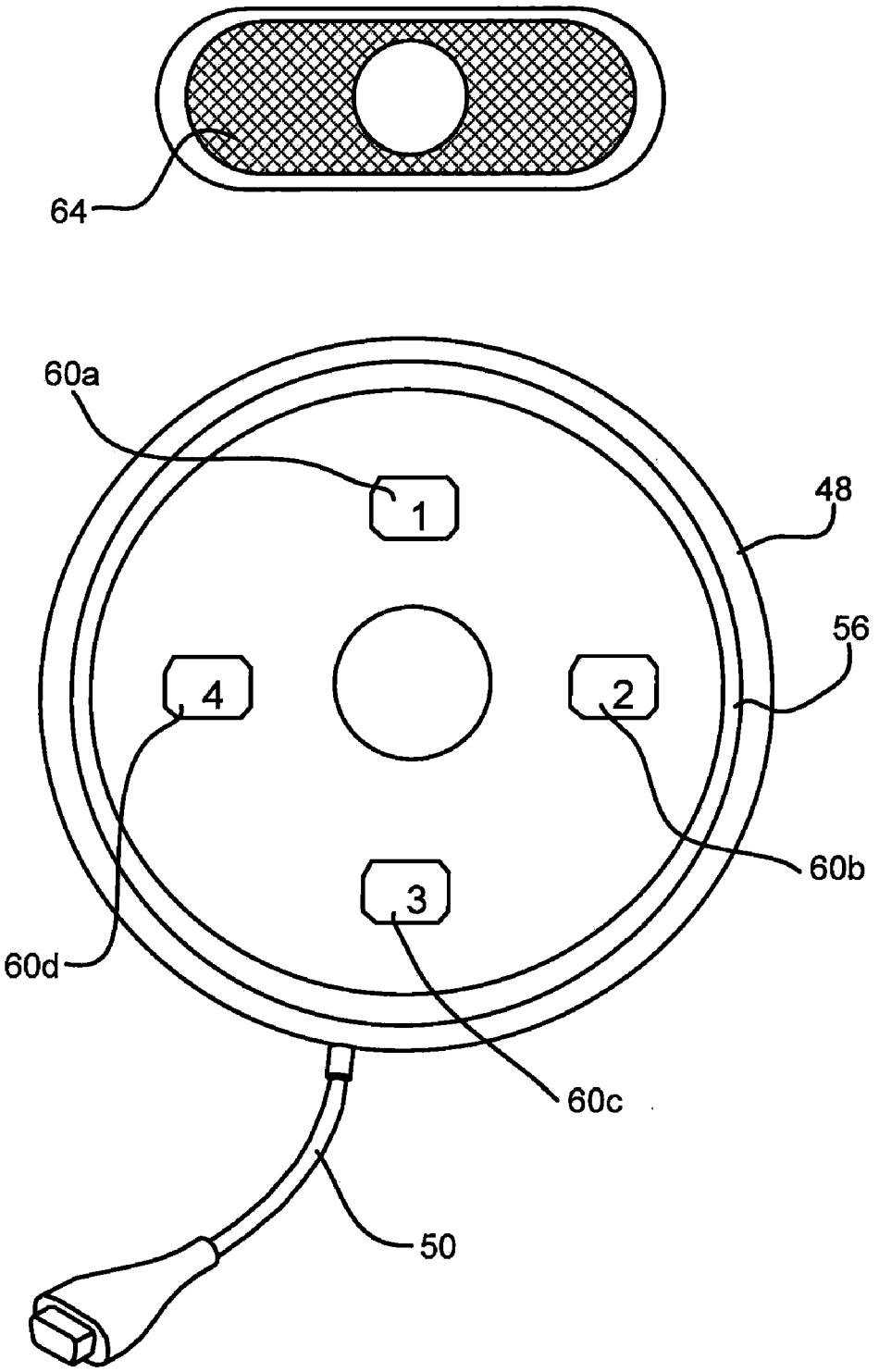

Fig. 6

Barco Exhibit 2003

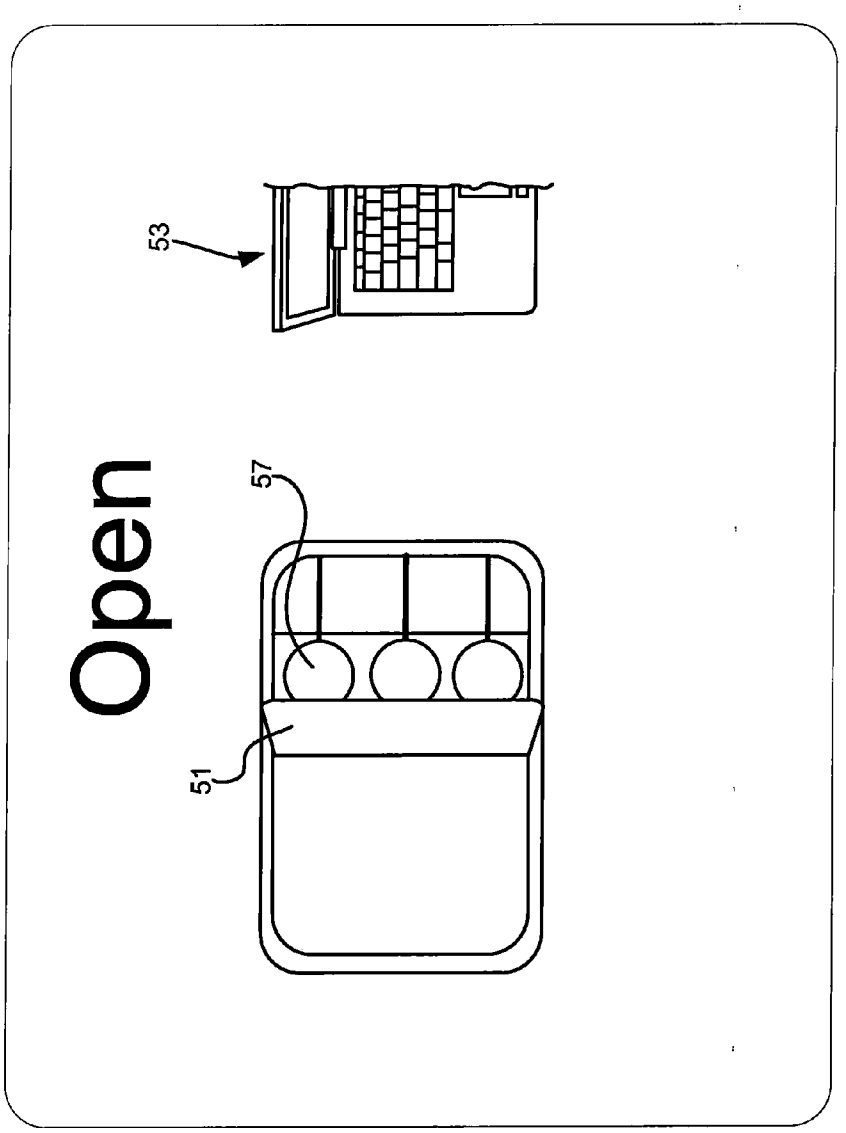

Fig. 7

Barco Exhibit 2003

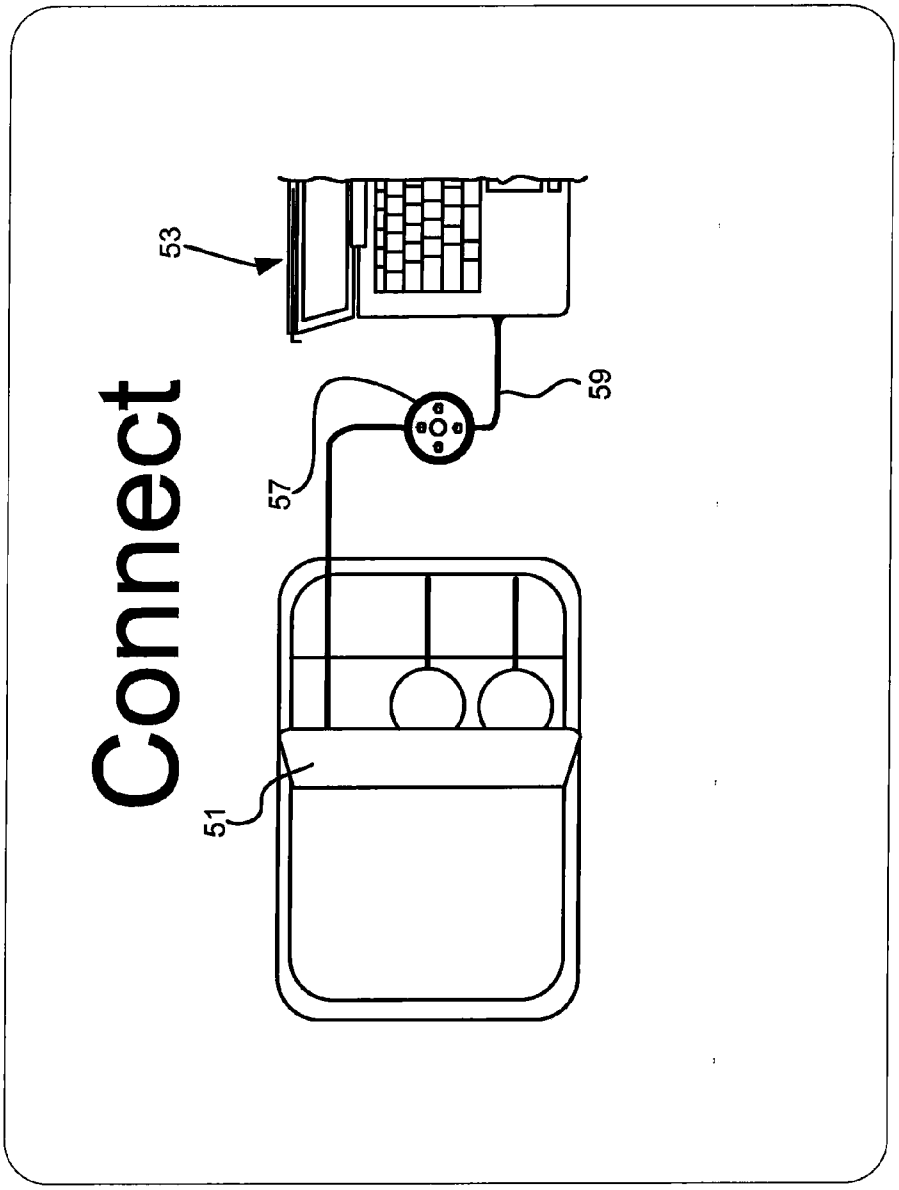

Fig. 8

Barco Exhibit 2003

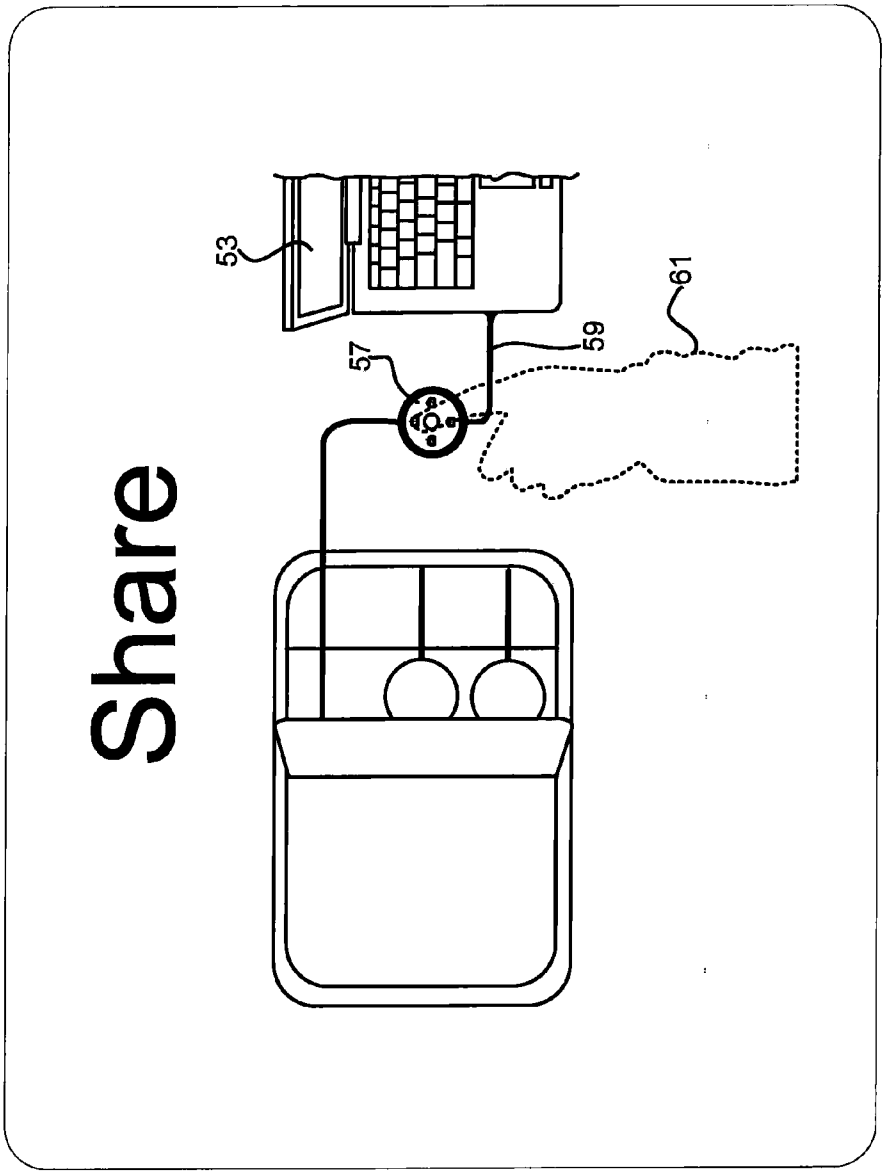

Fig. 9

Barco Exhibit 2003

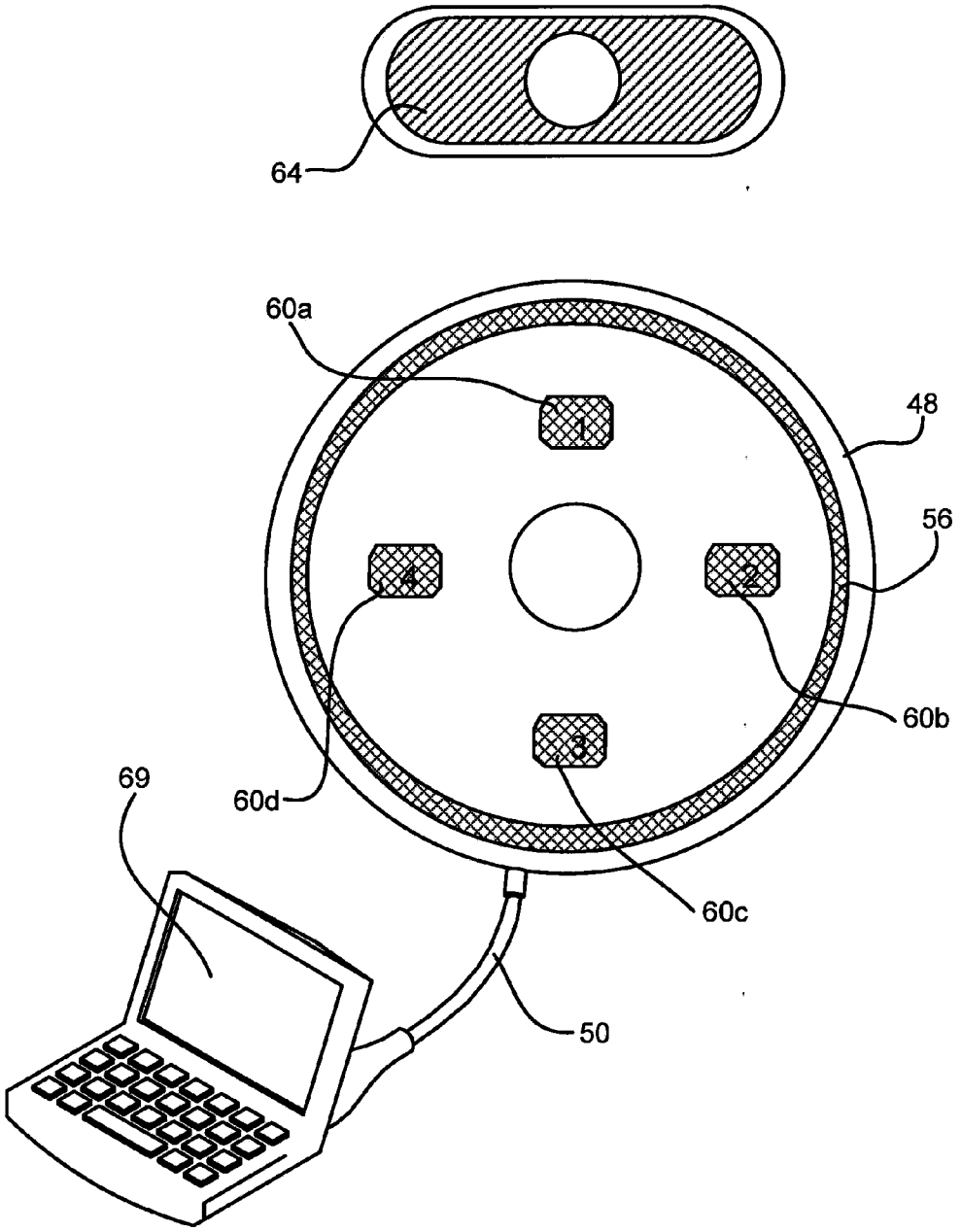

Fig. 10

Barco Exhibit 2003

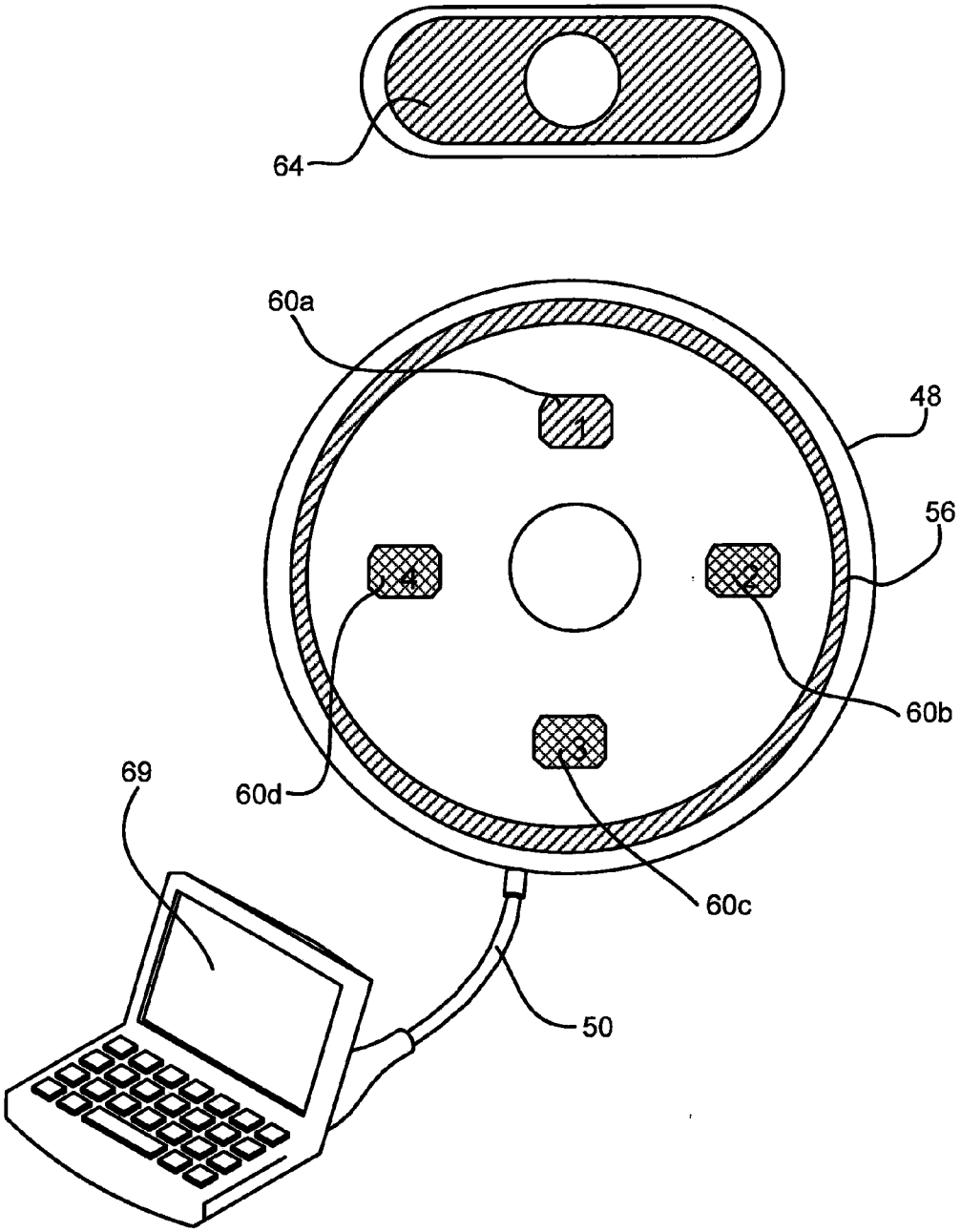

Fig. 11

Barco Exhibit 2003

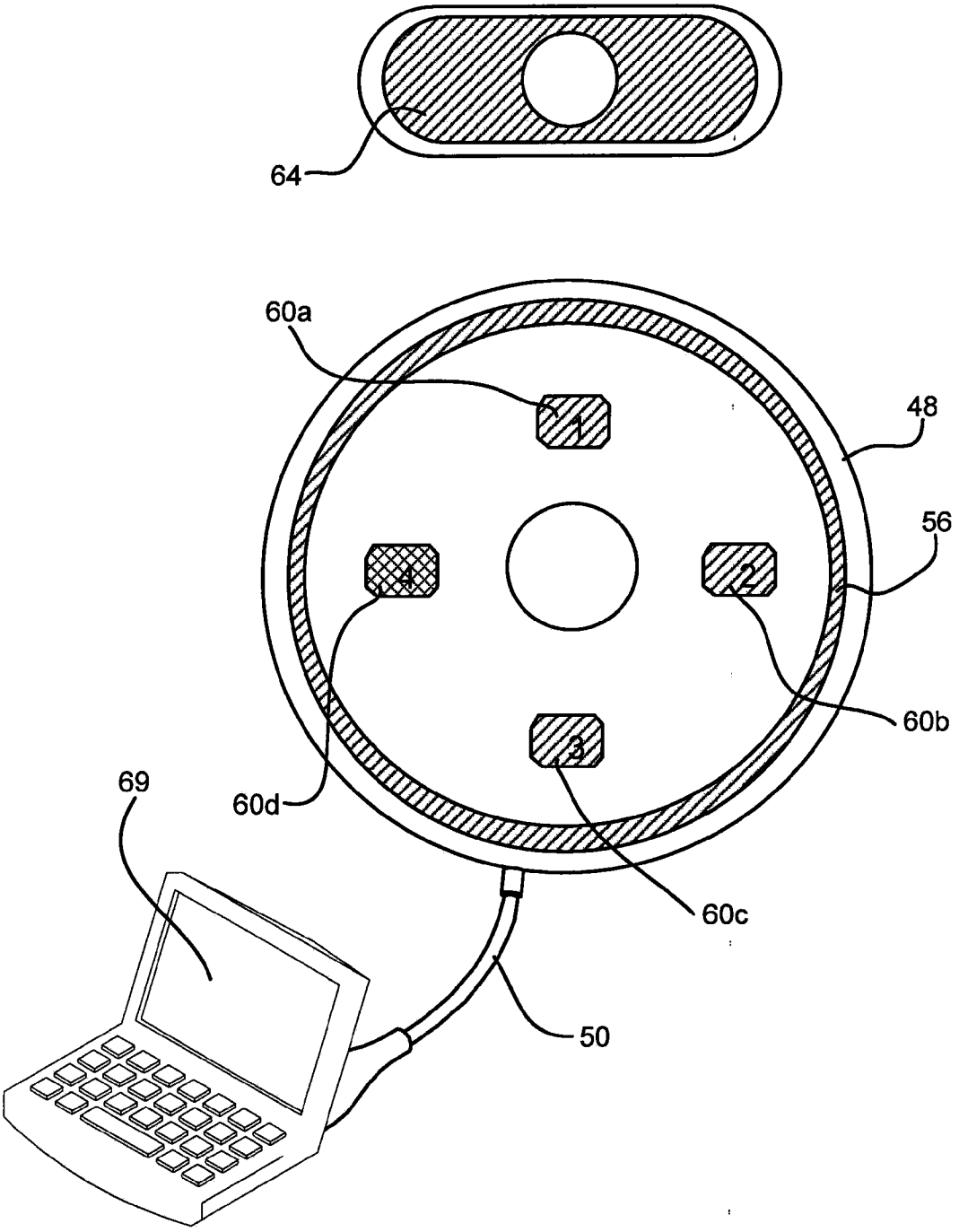

Fig. 12

Barco Exhibit 2003

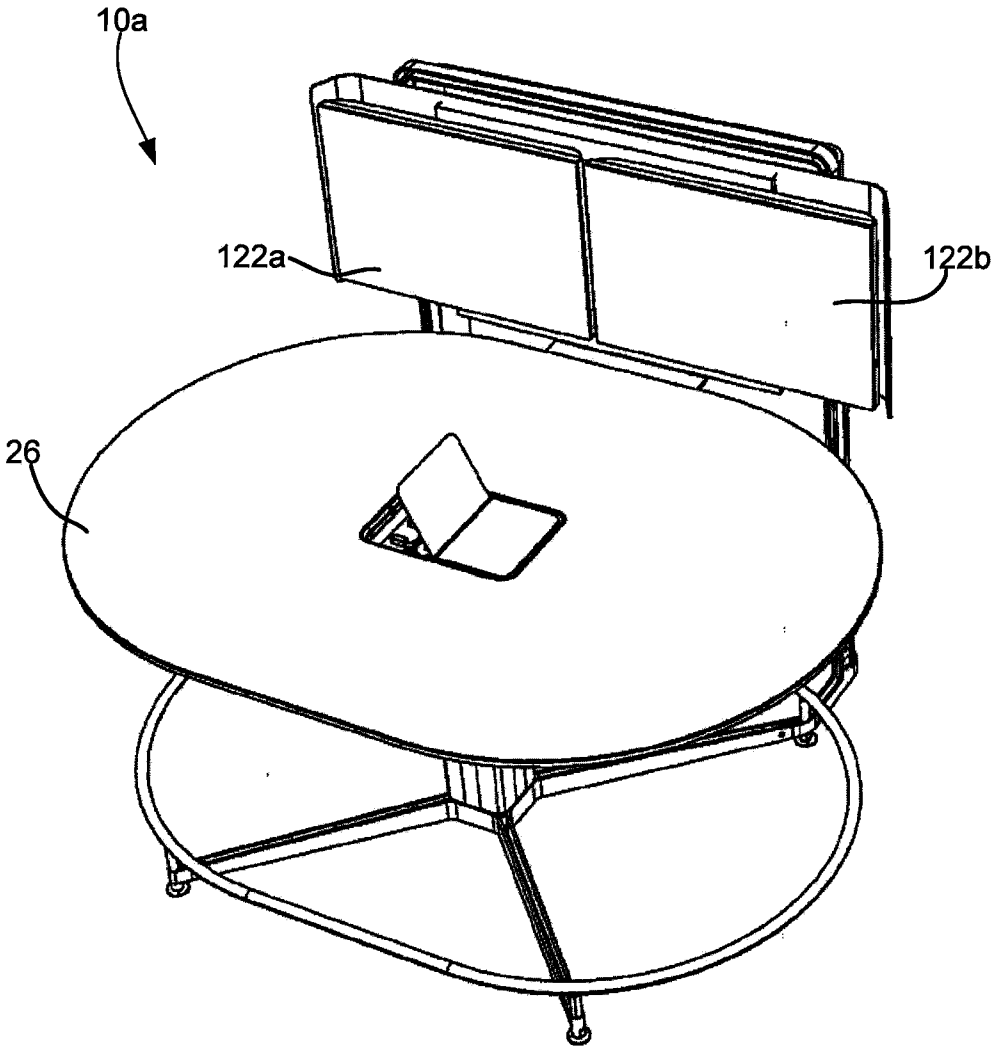

Fig. 13

Barco Exhibit 2003

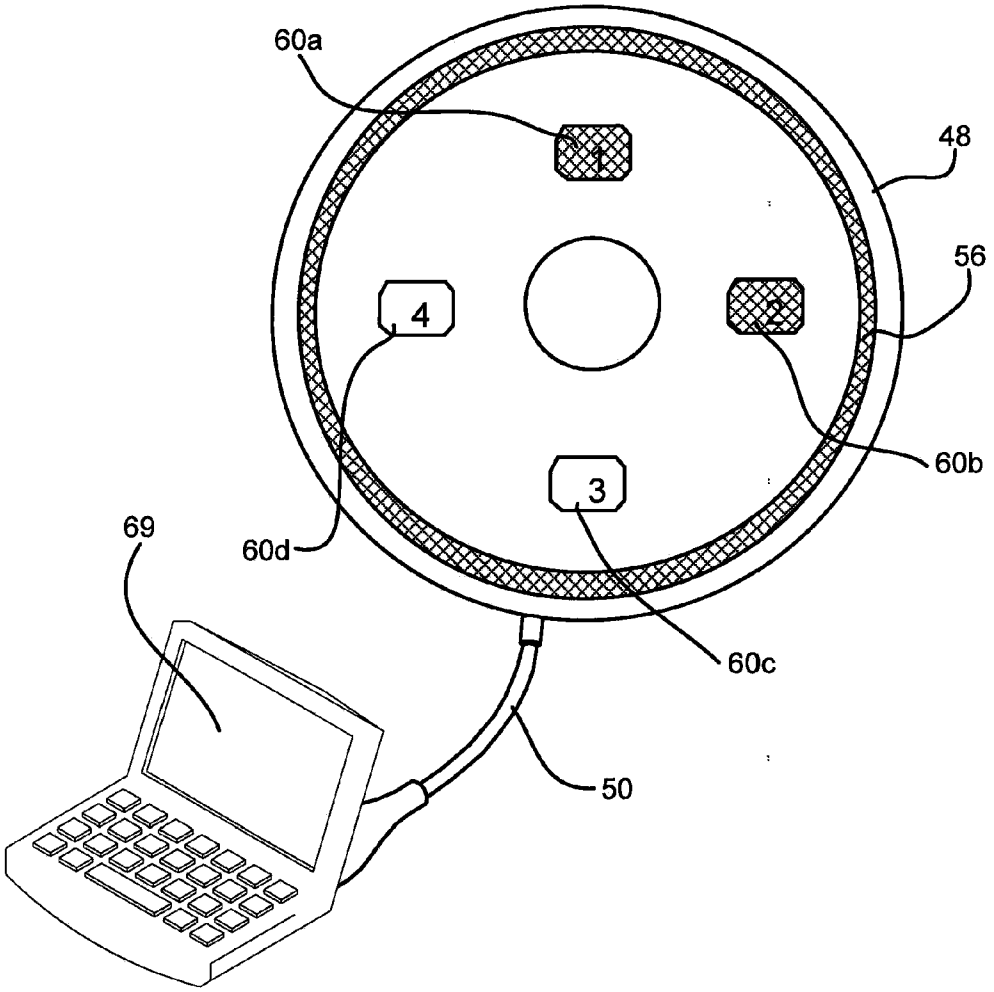

Fig. 14

Barco Exhibit 2003

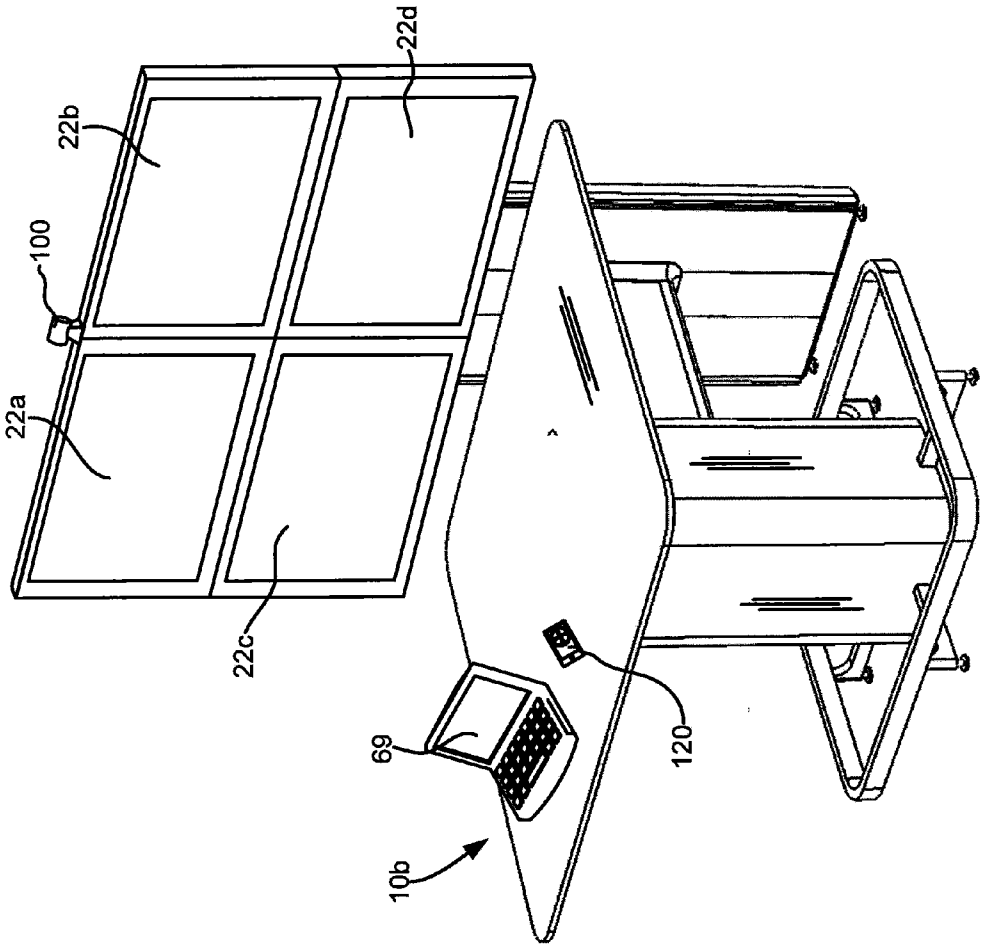

Fig. 15

Barco Exhibit 2003

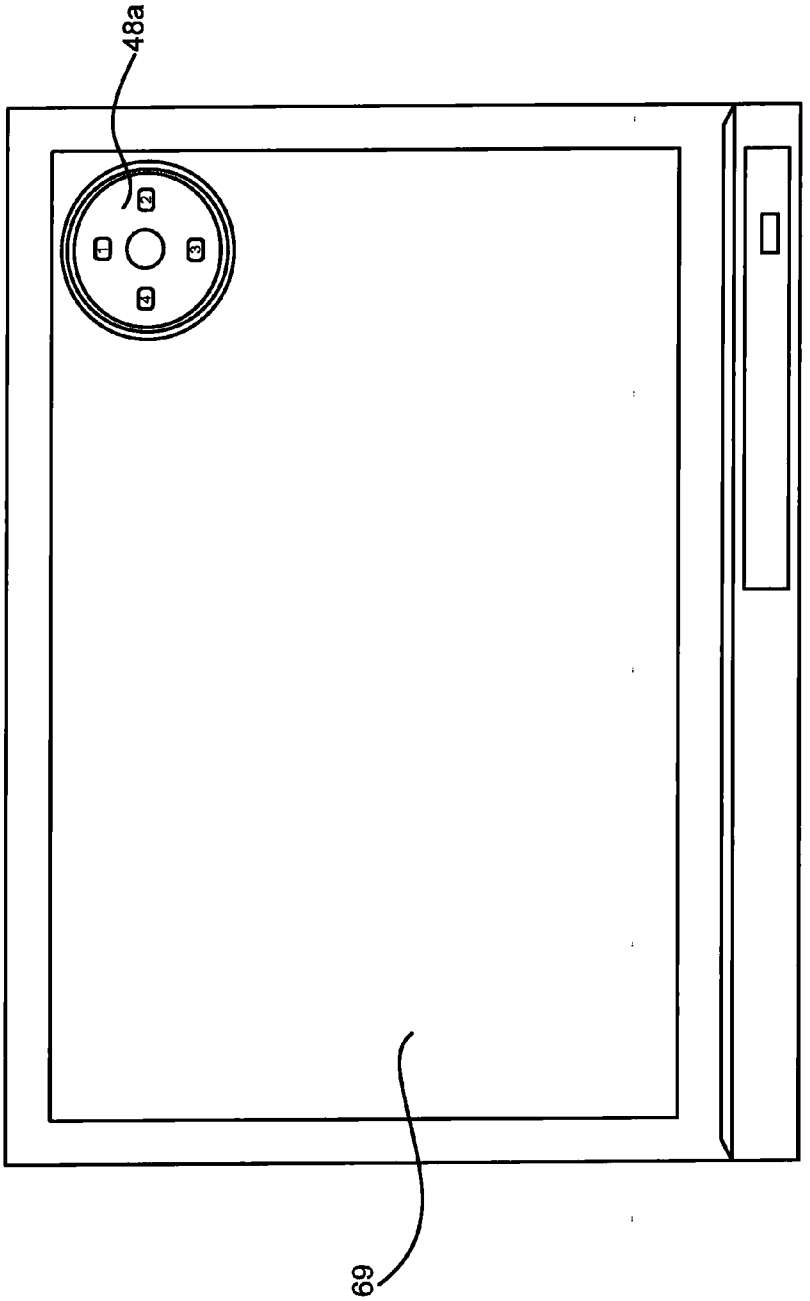

Fig. 16

Barco Exhibit 2003

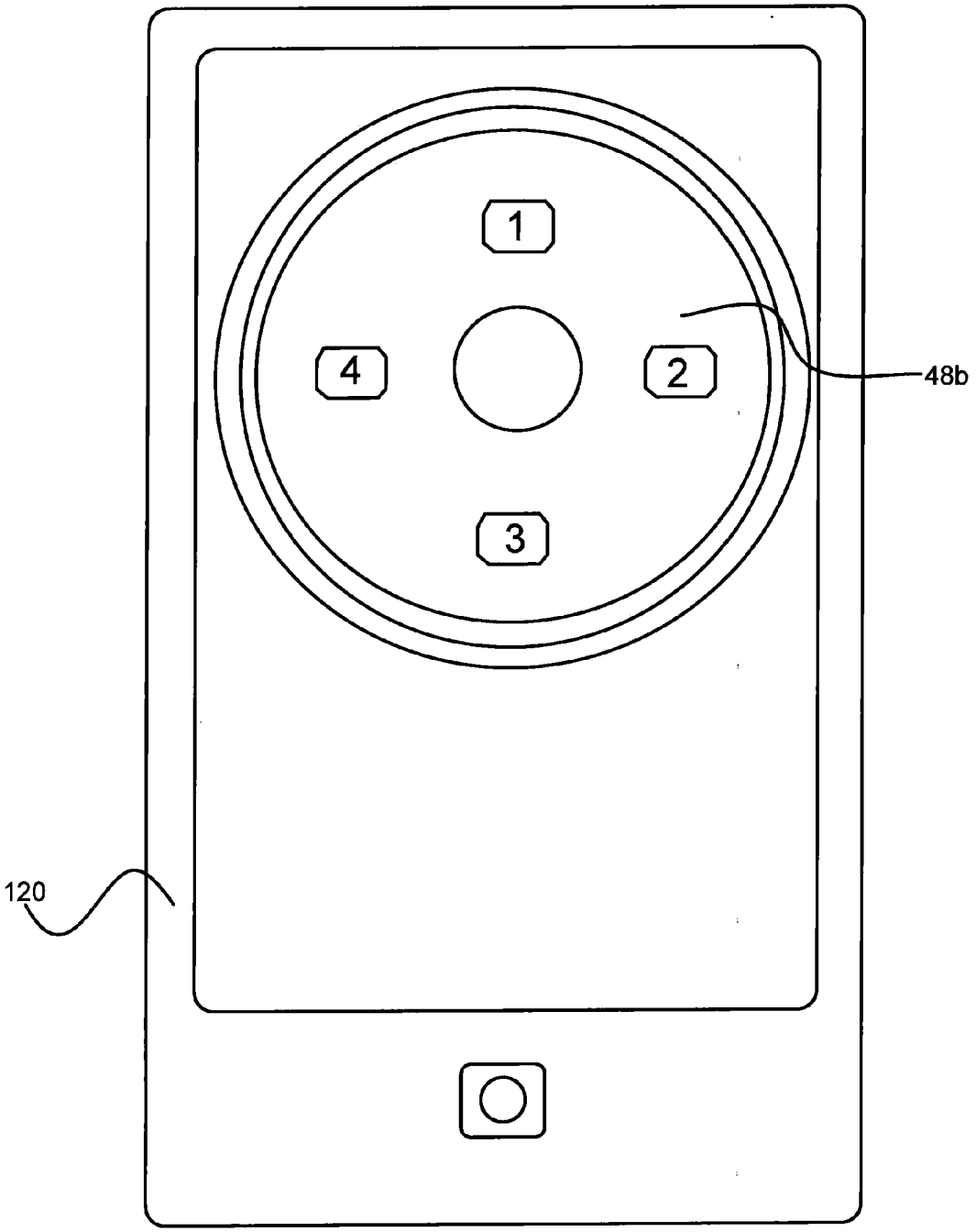

Fig. 17

Barco Exhibit 2003

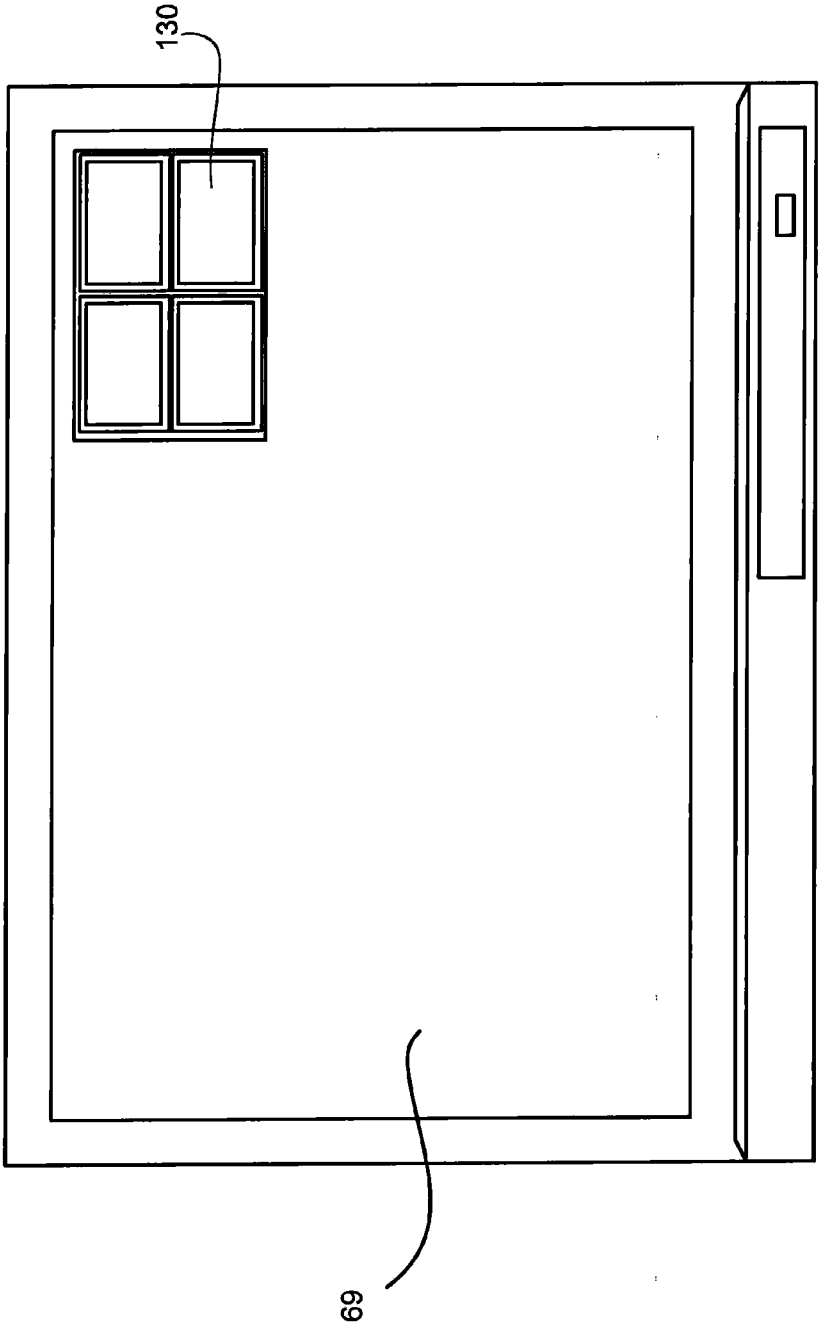

Fig. 18

Barco Exhibit 2003

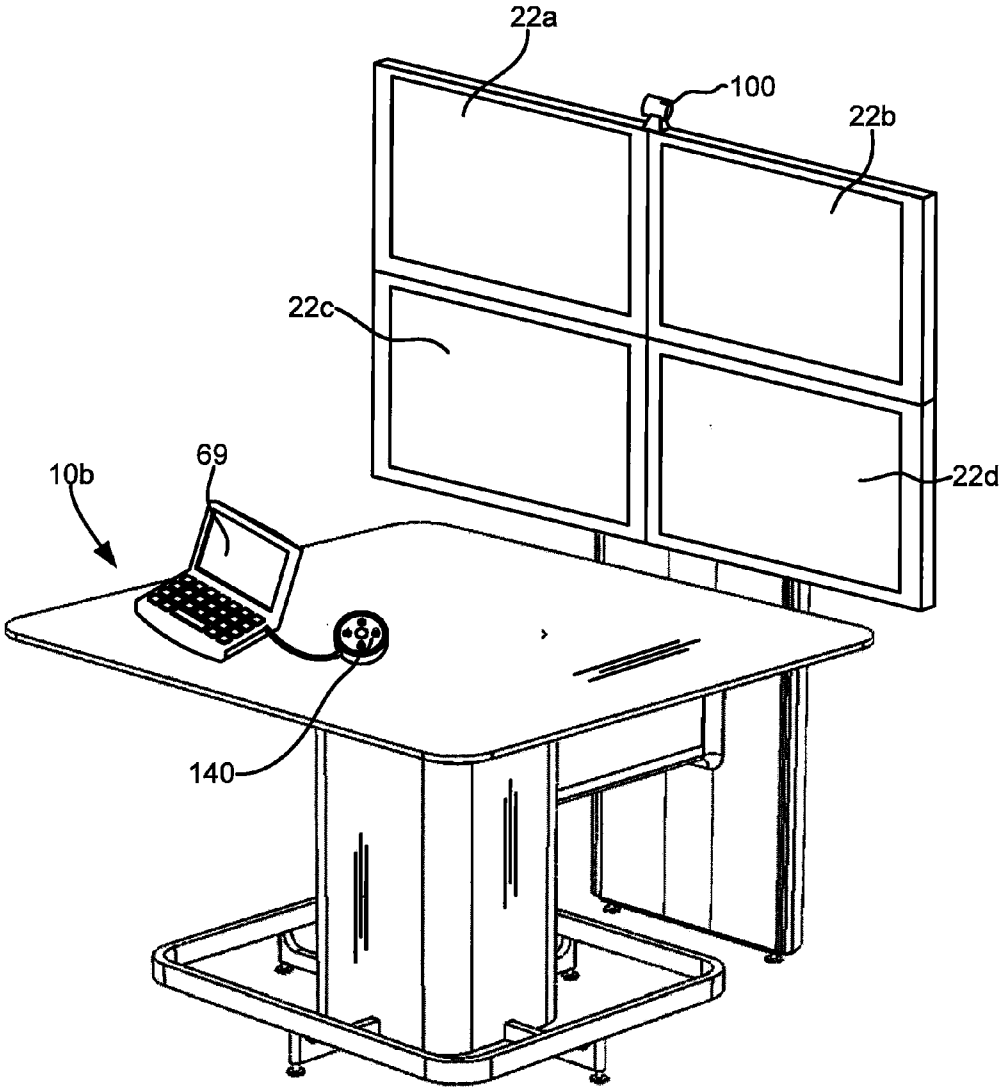

Fig. 19

Barco Exhibit 2003

PERSONAL CONTROL APPARATUS AND METHOD FOR SHARING INFORMATION IN A COLLABORATIVE WORKSPACE

CROSS-REFERENCE TO RELATED APPLICATIONS

[0001] Not applicable

STATEMENT REGARDING FEDERALLY SPONSORED RESEARCH OR DEVELOPMENT

[0002] Not applicable.

BACKGROUND OF THE INVENTION

[0003] The present invention relates to the presentation of audiovisual information via one or more large format common displays in a collaborative workspace and more specifically to a fast and intuitive controller allowing a meeting participant with a laptop computer to quickly and easily control the presentation of laptop information on common displays.

[0004] Small group conference tables usable as collaborative workspaces have been designed with one or more large video displays such as a LCD flat-panel monitor or a wall suitable for having images projected thereon, connected to or adjacent the conference table. The basic intent behind such workspace designs is to provide information at or near a table edge for attendees to refer to during discussions and presentations. In many cases, the video display is connected to and driven by a dedicated computer.

[0005] Oftentimes, more than one attendee needs to be able to control the information presented on the video display at different times during a conference. One way to allow several attendees to present information on a video display screen is to have each presenter sequentially connect their laptop computer directly to the display or projector with a dedicated audio/video cable. Though straightforward and simple, having to repeatedly disconnect and connect the cable from one laptop computer to another takes time and is disruptive.

[0006] Another way of enabling several attendees to share audiovisual information from their own laptop computers via a common large video display screen is to provide separate audio/video cables for each presenter and connect each of the laptops to an audiovisual switching device that enables the attendees to take control of the common display screen via selection of a button associated with each of the audio/video cables.

[0007] While such an arrangement provide a relatively quick transition between presenters, such arrangements typically require a separate controller or control program and a number of less-than-intuitive steps that must be followed to transition from one presenter to another. Further, known such arrangements do not provide a quick and intuitive indication as to which presenter is sharing their information via the video display screen. As a result, meeting presenters and participants may experience confusion and delay between transitions. Such user experiences may result in a loss of productivity and in general, can be significant impediments to the successful collaboration between conference participants and willingness of participants to use the system.

[0008] Thus, while solutions for managing and controlling the flow of information from interconnected computing devices have been developed, known solutions do not provide simple and intuitive steps for selecting which information is shared via the video display and for indicating which of several video/audio resources currently control presented information.

BRIEF SUMMARY OF THE INVENTION

[0009] It has been recognized that a simple control interface may be provided where the interface provides feedback to configuration users indicating which of several different conference attendees is presenting information via one or more common display screens or presentation spaces. To this end, a separate control interface is provided for each of a plurality of attendees where each interface includes control buttons or the like and indicators that can indicate visually distinguished states. For instance, when a laptop or other video/audio source is linked to one of the control interfaces, the interface may visually indicate that the laptop is in a state wherein the laptop may be used to present information via one or more common displays but that the laptop is not currently presenting. When a user selects one of the buttons on the interface to present information on the common display, the indicator may change appearance to visually indicate to attendees that the laptop linked to the interface is presenting.

[0010] It has also been recognized that where a configuration includes more than one common display, it would be useful to provide an indication to each configuration user as to common display options which can be selected and which common displays are currently being driven via a user's laptop or other source. To this end, in at least some cases each control interface is configured to include a separate selectable buttons for each common display where, when a button is selected so that a source associated with the interface is to drive an associated display, the appearance of the button or an indicator associated therewith is modified to indicate to the user which of the common displays is currently being driven. In particularly advantageous embodiments the indicators include illumination devices wherein different illumination colors indicate different states or conditions.

[0011] Consistent with the above, at least some inventive embodiments include a method of selecting information from a video source to be displayed on at least a first common display screen in a collaborative workspace having a switching device, the method comprising the steps of providing a selectable control interface that includes at least one indicator that can indicate at least first and second different states, associating a video source with the switching device so that video information from the video source is presented to the switching device, when the video source is associated with the switching device, causing the at least one indicator to indicate a first state and, when the selectable control interface is selected, causing the at least one indicator to indicate the second state and providing the video information from the video source to the common display screen via the switching device.

[0012] In at least some cases the step of providing a selectable control interface includes providing a mechanical interface that includes at least one selectable button. In at least some cases the mechanical interface includes a first cable linkable to the video source and a second cable which links to the switching device and wherein the step of associating a video source with the switching device includes linking the first cable to the video source. In at least some cases the indicator includes at least a first illumination device wherein the steps of causing the at least one indicator to indicate the

first and second states includes causing the illumination device to light up first and second different colors, respectively.

[0013] In at least some cases the control interface forms a substantially flat upper surface and wherein the at least a first illumination device transmits light around a periphery of the flat upper surface. In at least some embodiments the method further includes the step of, while the video information from the video source is provided to the shared display screen via the switching device, when the selectable control interface is selected a second time, causing the at least one indicator to indicate the first state and blocking the video information from the video source to the shared display screen via the switching device.

[0014] In at least some cases the method is for use with a system that includes a plurality of common display screens wherein the selectable control interface includes a separate selectable control for each of the plurality of display screens and wherein the at least one indicator includes a separate illumination device for each of the separate selectable controls, the step of causing the at least one indicator to indicate the first state including causing each illumination device associated with a common display screen to generate light of a first color indicating the first state and wherein, when any one of the control interfaces is selected, the method further includes the steps of causing the illumination device associated with the selected control to indicate the second state and providing the video information from the video source to the common display screen associated with the selected control.

[0015] In at least some embodiments the method further includes the steps of providing a second selectable control interface that includes at least one indicator that can indicate at least first and second different states, associating a second video source with the switching device so that video information from the second video source is presented to the switching device, when the second video source is associated with the switching device, causing the at least one indicator on the second control interface to indicate the first state and when the second selectable control interface is selected, causing the at least one indicator on the second control interface to indicate the second state and providing the video information from the second video source to the common display screen via the switching device irrespective of which source was providing video information to the common display screen prior to selection of the second selectable control interface device.

[0016] In some embodiments the video source is a computer including a display screen and wherein the control interface appears on the computer display screen for selection. In some embodiments communication between the computer and the switching device is wireless.

[0017] Other embodiments include a method of selecting information from a video source to be displayed on a subset of M common display screens in a collaborative workspace having a switching device, the method comprising the steps of providing a control interface that includes N selectable controls wherein N is at least as great as M and wherein each control is associated with a separate indicator and each indicator may assume at least first and second visually distinguishable states, associating a video source with the switching device so that video information from the video source is presented to the switching device and when the video source is associated with the switching device, causing a separate indicator for each of the M common display screens to assume the second visual state while the other N-M indicators remain in the first visual state.

[0018] In some embodiments each control includes a separate illumination device which may be illuminated to indicate at least one of the first and second states. In some embodiments each control indicates the second state by exciting an associated illumination device and indicates the first state by cutting off power to the illumination device. In some embodiments each of the indicators may assume a third visually distinguishable state, the method further including the steps of, when any of the selectable controls is selected, causing the indicator associated with the selected control to indicate the third state and providing the video information from the video source to the common display screen via the switching device.

[0019] In some embodiments the control interface is provided via a representation on a computer display screen. In some embodiments the step of providing a control interface includes providing a mechanical interface that includes a cable and wherein the step of associating a video source with the switching device includes linking the video source to the mechanical interface via a cable.

[0020] Still other embodiments include an apparatus for selecting information from a video source to be displayed on at least a first common display screen in a collaborative workspace having a switching device, the apparatus comprising a control interface that includes at least a first indicator that can visually indicate at least first, second and third visually distinguished states wherein the control interface indicates the first state when a video source is disassociated with the switching device, the second state when the video source is associated with the switching device and video information from the video source is not presented via the common display and the third state when the video source is associated with the switching device and video information from the video source is presented via the common display.

[0021] In some embodiments the at least a first indicator includes an illumination device and wherein the first state is indicated by cutting power to the illumination device, the second state is indicated via illumination of a first color and the second state is indicated via illumination of a second color. In some embodiments the control interface includes at least a first selectable control which, when selected, causes the video information from the video source to be presented via the common display and causes the indicator to change from the first state to the second state.

[0022] Other embodiments include an apparatus for selecting information from a video source to be displayed on a subset of M common display screens in a collaborative workspace having a switching device, the apparatus comprising a control interface that includes N selectable controls wherein N is at least as great as M and wherein each control is associated with a separate indicator and each indicator may assume at least first and second visually distinguishable states, wherein, when a video source is not associated with the switching device, each indicator indicates the first state and, when a video source is associated with the switching device, a separate indicator for each of the M common display screens assumes the second state while the other N-M indicators remain in the first state.

[0023] To the accomplishment of the foregoing and related ends, the invention, then, comprises the features hereinafter fully described. The following description and the annexed drawings set forth in detail certain illustrative aspects of the

invention. However, these aspects are indicative of but a few of the various ways in which the principles of the invention can be employed. Other aspects, advantages and novel features of the invention will become apparent from the following detailed description of the invention when considered in conjunction with the drawings.

BRIEF DESCRIPTION OF THE SEVERAL VIEWS OF THE DRAWINGS

[0024] FIG. **1** is a perspective view of a collaborative conference table configuration having four display screens in accordance with at least some aspects of the present invention;

[0025] FIG. **2** is a view of a portion of the configuration shown in FIG. **1**, albeit where a switcher and other components and cables that are typically hidden under the top surface of FIG. **1** are shown in perspective views;

[0026] FIG. **3** includes a top plan view, end views and a side view of the switcher shown in FIG. **2**;

[0027] FIG. **4** is an enlarged perspective view showing one of the puck control assemblies that comprises a portion of the configurations shown in FIG. **1**;

[0028] FIG. **5** is a schematic illustrating components of an exemplary control interface/puck;

[0029] FIG. **6** is a schematic illustrating the puck control assembly of FIG. **4** and a power on button in the first state after the power on button has been selected to cause the system to begin operation;

[0030] FIG. **7** is a schematic illustrating an exemplary screen shot corresponding to a portion of an instructional video that may be presented via one or more of the displays shown in FIG. **1** after the power on button is selected;

[0031] FIG. **8** is similar to FIG. **7**, albeit illustrating a different portion of the instructional video;

[0032] FIG. **9** is similar to FIG. **7**, albeit illustrating yet a different portion of the instructional video;

[0033] FIG. **10** is similar to FIG. **6**, albeit illustrating the state of the puck when a laptop is initially connected thereto;

[0034] FIG. **11** is similar to FIG. **10**, albeit illustrating the state of the puck after a selection button corresponding to one of the display screens of FIG. **1** has been selected;

[0035] FIG. **12** is similar to FIG. **11**, albeit illustrating the puck condition after three buttons corresponding to three of the display screens shown in FIG. **1** have been selected;

[0036] FIG. **13** is similar to FIG. **1**, albeit illustrating another configuration embodiment as consistent with at least some aspects of the present invention;

[0037] FIG. **14** is similar to FIG. **10**, albeit illustrating the puck condition for the system of FIG. **12** where the system only includes two displays;

[0038] FIG. **15** is similar to FIG. **1**, albeit illustrating a system that includes a wireless access device so that laptops and other video/audio sources can link provide data to the displays wirelessly;

[0039] FIG. **16** shows a puck "widget" that may be presented via a laptop display screen;

[0040] FIG. **17** shows a puck "widget" provided on a touch sensitive palm type computing device;

[0041] FIG. **18** is similar to FIG. **16**, albeit showing a different appearing virtual control interface; and

[0042] FIG. **19** is similar to FIG. **15**, albeit where a mechanical interface is included for use with a source.

DETAILED DESCRIPTION OF THE INVENTION

[0043] Referring now to the figures wherein like reference numerals correspond to similar elements throughout the several views and more specifically, referring to FIGS. **1** through **4**, one embodiment of a collaborative workspace configuration **10** that is consistent with at least some aspects of the present invention is illustrated. Workspace configuration **10** includes a display system **12** and a conference table assembly **14**. Various mechanical aspects of configuration **10** are described in co-pending U.S. patent application Ser. No. 12/250,192 that was filed on Oct. 13, 2008 and is titled "Conference Display Configuration" and which is incorporated herein by reference. Hereafter, general mechanical features of the configuration **10** are described that are useful in understanding operation of the current invention. The prior application referenced above should be referred to for more detail regarding the mechanical aspects of configuration **10**.

[0044] Display system **12** includes a totem or stand support structure **28** and four relatively large flat panel displays **22***a*, **22***b*, **22***c* and **22***d*. Totem **28** is vertically oriented and includes a front facing surface **32** to which displays **22***a* through **22***d* are mounted. Displays **22***a* through **22***d* are arranged so that viewing or presentation surfaces face in the same direction and generally away from totem **28**. Displays **22***a* through **22***d* are arranged in a two row and two column arrangement. Although not illustrated, totem **28** includes a housing that forms a cavity in which power and data cables can be received to provide power/data to display **22***a* through **22***d*.

[0045] Conference table assembly **14** includes a support structure **24**, a table top member **26** and a bridge assembly **30**. Support structure **24** generally forms a vertical leg to support top member **26** in a horizontal orientation. Structure **24** also forms an internal cavity for receiving various power, data and communication components as well as other mechanical components such as cable take up subassemblies described in the co-pending patent application referenced above.

[0046] Bridge assembly **30** secures totem **28** to support structure **24** to stabilize totem in a vertical orientation. In addition, although not illustrated, bridge assembly **30** forms an internal channel or cavity for passing power and/or data cables between structure **24** and totem **28**.

[0047] Top member **26** is generally a rigid square flat member that forms a top work surface and a central rectilinear opening. A dual door assembly **36** is mounted within the central opening that includes two door members **39**, **41** that have top surfaces that are flush with the top surface of member **26** when the doors are closed. Each door in hinged to open to allow access to table components there below. Together the doors are dimensioned so that when closed as best seen in FIG. **4**, each door **39** and **41** forms a gap (see **43** and **45**) with the opening around a peripheral edge for passing cables.

[0048] Referring still to FIG. **4**, adjacent the doors **39** and **41** at the edge of the central opening an illuminated button **64** is provided. Although not illustrated, button **64** is linked to a power source. Button **64** is a dual state push button and, in at lease some embodiments, is illuminated all the time. In some embodiments, button **64** may include a universal power indicator symbol indicating to users that the table is powered. By illuminating button **64** even when the table configuration **10** is not being used, the button invites users to start up a conferencing session and is an indicator that the configuration **10** is

operable and ready to use. When not in use button **64** will have a first illuminated color (e.g., white) and when button **64** is selected, the button will be illuminated in a second color (e.g., green) confirming for the user that the button has been selected.

[0049] Referring specifically to FIG. **2**, components mounted within structure **24** below top member **26** include a switching device **16**, a user interface assembly **19** and a power source **55**. Referring also to FIG. **3**, where switching device **16** is shown in four different views, switching device **16**, as the label implies, can be used to switch different input video/audio sources at different input ports to change which input is feeding video/audio output ports. To this end, exemplary switching device **16** includes six input ports collectively identified by numeral **17** (three on either end of device **16**), a video conference input port **42**, and a PC input port **40**. Device **16** includes four video/audio output ports collectively labeled **44**. In operation, switching device **16** can be controlled to output video/audio from any one of the input ports **17**, **40** or **42** to any one or more of output ports **44**. In addition, switching device **16** is controllable so that input from two, three or four of the different inputs **17**, **40** or **42** can be output simultaneously to different ones of the output ports **44**.

[0050] Referring again to FIG. **2**, interface assembly **19** includes a deck member **21** and six selectable control interfaces referred to as "puck" assemblies, two of which are labeled **20**. Deck member **21** forms a top surface **25** for receiving and supporting the puck assemblies **20** when the puck assemblies are in stored positions below covers **39** and **41** (see again FIG. **1**). Each puck assembly **20** is similarly constructed and operated in a similar fashion and therefore, in the interest of simplifying this explanation, only one puck assembly **20** will be described here in detail.

[0051] Referring also to FIG. **4**, exemplary puck assembly **20** includes a puck **48** and first and second video/audio cables **50** and **52**, respectively. Cable **50** is used to link puck **48** to a computer/laptop audio/video output port or other video source while cable **52** links puck **48** through a circuitous path to one of the six input ports **17** shown in FIGS. **2** and **3**. In at least some embodiments, each cable **52** can be taken up by a take up assembly (not shown) below deck member **21** as an associated puck **48** is moved from a use position on top of top member **26** (see FIG. **4**) to a storage position as shown in FIG. **2**. For more detail regarding one possible take up assembly, see US patent application Ser. No. 12/250,192 referenced above. As seen in FIG. **4**, when a puck **48** is pulled into a use position on top of member **26**, cable **52** can pass through gap **43** when door **39** is closed.

[0052] Referring still to FIG. **4** and also to FIG. **5**, exemplary puck **48** includes a disc or puck shaped housing **49** that supports a plurality of components including a processor **71**, an on/off button **58**, first through fourth selectable controls or control buttons **60***a*-**60***d*, four illumination devices **73***a* through **73***d* and an illumination ring **56**. Processor **71** may be a programmable microprocessor or may be configured via digital components. Processor **71** is linked to each of cables **50** and **52** and can sense when cabled **50** is linked to a video/audio source. Processor **50** is also linked to each of buttons **56** and **60***a*-**60***d* to sense when any of those buttons are selected. Processor **50** is further linked to each of illumination devices **73***a* through **73***d* and ring **56** for providing power to and cutting power from each of those devices.

[0053] In at least some embodiments each of illumination devices **73***a*-**73***d* and ring **56** can be controlled to generate light in two different colors such as white and green or can be dark so that at least two or three different states can be indicated in visually distinguished ways.

[0054] As seen in FIG. **4**, each button **60***a*-**60***d* has a different number 1, 2, 3 or 4 indicated thereon. Here, each number 1, 2, 3 or 4 corresponds to a different one of the display screens **22***a* through **22***d* in FIG. **1**. For instance, button **60***a* labeled "**1**" may correspond to screen **22***a*, button **60***b* labeled "**2**" may correspond to screen **22***b*, and so on.

[0055] Referring again to FIGS. **4** and **5**, processor **71** is programmed or configured to determine when a video source is linked to cable **50** as well as when any of buttons **58** or **60***a*-**60***d* is selected and to indicate a current state of the puck and associated video source via the illumination devices **73***a*-**73***d* and ring **56** for the benefit of both the puck user and others gathered around configuration **10**. In addition, processor **71** provides an indication of the display configuration **12** to the puck user. In this regard, in a system including four displays (e.g., the number of common displays is M) as in FIG. **1**, all four screen selection buttons **60***a*-**60***d* (where N is the number of selection buttons) may be illuminated prior to selection to indicate four options that can be selected by the puck user. Where another configuration includes less than four displays, only a subset of buttons **60***a*-**60***d* would be illuminated prior to selection. For instance, in FIG. **2**, where the configuration only includes two displays and hence there are only two display options, only buttons **60***a* and **60***b* would be illuminated prior to selection to indicate only two options to select from. Here, switching device **16** may be configured to sense the number of output ports **44** to which display screens **22***a*-**22***d* or other output devices (e.g., projectors) are linked and provide a feedback signal via cable **52** to processor **71** to indicate the number of buttons **60***a*-**60***d* to illuminate.

[0056] In at least some embodiments the top surface of puck **48** may be formed of a black plastic where, when a button **60***a*-**60***d* is not illuminated, the number 1, 2, 3 or 4 appears dark and blends in with the top puck surface so that the number 1, 2, 3 or 4 is essentially unnoticeable.

[0057] By providing a puck **48** that includes four screen selection buttons **60***a*-**60***d*, a single puck type may be manufactured that can be used with any conferencing configuration including one, two, three or four common displays which reduces design and manufacturing costs appreciably.

[0058] Referring again to FIG. **4**, ring **56** is a ring shaped member disposed generally along a circumferential edge of the top surface of the puck **48**. because puck **48** has a generally low profile, light from ring **56** is relatively easily viewable from all directions above top member **26**. Thus, from any vantage point above top member **26** conference participants can see the visual state of ring **56**.

[0059] While controls **60***a*-**60***d* are described here as buttons, it should be appreciated that controls **60***a*-**60***d* may take any of several different forms. For instance, controls **60***a*-**60***d* may be provided via a touch sensitive interface surface including a separately selectable location or area associated with each button **60***a* through **60***d*.

[0060] In at least some embodiments ring **56** is not illuminated until a video/audio source (e.g., a laptop) is linked to cable **50**. Once a source is linked to cable **50**, if the linked source is supplying video/audio to one or more of displays **22***a*-**22***d* (see FIG. **1**), ring **56** is illuminated in one color (e.g., white) and if the linked source is not currently driving any of displays **22***a*-**22***d*, ring **56** is illuminated in a second color (e.g., green). Thus, ring **56** is useful as an indicator to confer-

ence participants around table top **26** that identifies the person or persons that are currently displaying information on one or more of the common displays **22***a*-**22***d*.

[0061] Referring again to FIGS. **1** and **4**, after a laptop or other video/audio source is linked to cable **50** to provide video via cable **50** to display **22***a*, button **60***a* is selected, to provide video to display **22***b*, button **60***b* is selected, and so on. Prior to each of buttons **60***a*-**60***d* being selected, in at least some embodiments, the buttons **60***a*-**60***d* are not illuminated. In other embodiments, prior to selection, each button **60***a*-**60***d* may be illuminated, like ring **56**, in one color and after selections, each selected button may change to a second illuminated color to distinguish selected from unselected buttons **60***a*-**60***d*.

[0062] Referring again to FIGS. **4** and **5**, central button **58** is provided as an on/off button which may be selected by a puck user to effectively cut off the user's linked laptop or other source from driving displays **22***a*-**22***d*. Thus, where a laptop is linked to cable **50** but a user does not want to inadvertently present laptop information via the common displays, the user can simply press button **58** to render puck **48** ineffective at passing on video/audio to the displays. Here, when button **58** is selected to "turn off" the puck **48**, ring **56** and buttons **60***a*-**60***d*, in at lease some cases, are no longer illuminated.

[0063] Referring now to FIGS. **1** and **4**, prior to any laptop or other source being linked to configuration **10** to drive displays **22***a*-**22***d*, indicator button **64** may be illuminated with a white color to indicate to persons in the vicinity that configuration **10** is powered and ready for use. Hereinafter, a white light will be indicated in the figures via a double hatch (see **64** in FIG. **4**) and a green light will be indicated via a single hatch (see **64** in FIG. **6**). When a person wants to use configuration **10**, the person presses button **64** which causes button **64** to change from white to green as shown in FIG. **6** to signal to the person that the system is powering up.

[0064] In addition, when button **64** is pressed, in at least some embodiments, a short video clip is presented via one or more of displays **22***a*-**22***d* providing simple instructions to the person who pressed button **64** regarding how to use configuration **10**. Referring to FIGS. **7**-**9**, exemplary screen shots showing images consistent with a simple instruction video are illustrated. In FIG. **7**, a graphic of the utility bay door **39** opening **51** adjacent a laptop image **53** (i.e., a source image) is shown to indicate that one of the doors **37** or **41** (see FIG. **1**) should be opened. In FIG. **8** a puck **57** is shown moving out of the cavity under the door **51** and onto the work surface where the cable **59** associated with the puck is linked to the laptop **53**. In FIG. **9** a phantom user's hand image **61** is shown moving toward and over the puck image **57** to select one of the buttons provided thereby. Here, the instructional video clip is intentionally extremely simplified and includes only three steps "open", "connect" and "share." In at least some embodiments the instructions are only provided once and the duration is extremely short (e.g., approximately **15** seconds) which gives a user a sense that configuration **10** is particularly easy to use.

[0065] Following the instructions, as shown in FIG. **10**, a user pulls one of the pucks **48** from the cavity below a door **39** or **41** and links a laptop **69** to the puck **48** via cable **50** (see also FIG. **1**). Once a laptop **69** is linked to cable **50**, ring **59** as well as selectable buttons **60***a*-**60***d* are illuminated white (see double crosshatch in FIG. **9**) to indicate to the laptop user that the user is linked and can opt to present information from the user's laptop screen via any one or combination of displays **22***a*-**22***d* corresponding to illuminated buttons **60***a*-**60***d*, respectively. Here, the white light ring **56** also indicates that currently the user of puck **48** is not presenting via any of displays **22***a*-**22***d*.

[0066] Referring to FIG. **11**, when a puck user wants to present information from her laptop **69** display via display screen **22***a*, the user presses button **60***a* to indicate intention to drive display **22***a*. Once button **60***a* is selected, four things happen. First, information currently displayed via display **22***a* is replaced by the information from the user's laptop **69** display. Second, if a different laptop was previously presenting information via display **22***a* when button **60***a* is selected, the other user's puck illumination may change. For instance, if the other user was only displaying via display **22***a* when displaced, the other user's puck's ring **56** will change from green back to white illumination indicating the user is no longer driving any of displays **22***a*-**22***d*. As another instance, where another user was driving each of displays **22***a* and **22***c* when button **60***a* is selected, the other user's puck ring will remain green after displacement from screen **22***a* to indicate that the other user is still driving display **22***c* despite being displaced from display **22***a*. In addition, in this case, the other user's puck button **60***a* will be illuminated white after displacement from screen **22***a* while button **60***c* will remain green indicating that the other user is still driving display **22***c*.

[0067] Third, to indicate that the user of puck **48** in FIG. **10** is now driving at least one of displays **22***a*-**22***d*, ring **56** on puck **48** changes from white to green (see single cross hatch ring in FIG. **10**). Fourth, to let the puck user know which displays **22***a*-**22***d* she is currently driving, button **60***a* illumination changes from white to green. Here, other buttons **60***b*-**60***d* that were not selected remain white (i.e., they are shown as double cross hatched).

[0068] If the user next wants to display her laptop information via displays **22***a*-**22***c*, referring to FIG. **12**, the user selects button **60***b* and **60***c* which cause information from the user's laptop screen to replace any existing information on displays **22***b* and **22***c*, causes other puck illumination to change accordingly and causes buttons **60***b* and **60***c* to change from white to green illumination. At this point, as shown in FIG. **12**, each of buttons **60***a*-**60***c* and ring **56** are illuminated green while button **60***d* remains white.

[0069] To relinquish control of a display **22***a*-**22***d* currently controlled, in at least some embodiments, the button **22***a*-**22***d* corresponding to a display **22***a*-**22***d* can be selected a second time. In the iterative, to relinquish control of displays **22***a*-**22***d*, on/off button **58** may be selected. Once display control is relinquished, puck **48** illumination is updated accordingly.

[0070] After a configuration session is over and all sources have been disconnected from cables **50**, the system will eventually time out (e.g., approximately 15 minutes) and will power down so that button **64** returns to its white illuminated state (see again FIG. **4**).

[0071] Referring now to FIG. **13**, a second configuration **10***a* that is consistent with at least some aspects of the present invention is illustrated. Configuration **10***a* is different than configuration **10** in two general ways. First, configuration **10** has an oval table shape top member **260** as opposed to rectangular. Second, configuration **10** includes only two displays **122***a* and **122***d* instead of four. Here, referring also to FIG. **14**, in at least some embodiments, it is contemplated that when a laptop **69** is linked to a puck **48** initially so ring **56** is illuminated white, only buttons **60***a* and **60***b* would illuminate white

thereby indicating to a user that there are only two display choices **122***a* and **122***b* instead of four. Other operation of configuration **10***a* is similar to that described above.

[0072] Referring now to FIG. **15**, in at least some embodiments it is contemplated that laptops **69** and other visual/audio sources may be able to wirelessly link up to a configuration **10***b* processor via a wireless access device **100** or the like. In this case the configuration **10***b* may not need a utility bay and will not require cable hookups or physical pucks. Here, where a source **69** is associated with the configuration for control purposes, referring also to FIG. **16**, a software "widget" puck representation or control interface representation (hereafter a "widget") **48***a* may be provided on screen. In this case it is contemplated that the widget **48***a* will have an appearance similar to the appearance of interface **60** and button **58** where different widget areas corresponding to buttons **60***a*-**60***d* and **58** will be selectable via a mouse controlled cursor or touch (in the case of a touch sensitive display) for selection. In this case it is contemplated that when a virtual button on the widget is selected, the functionality and illumination described above with respect to puck **48** would occur. When the widget ring **56** is illuminated, the laptop could beep or buzz (i.e., create an audible signal of some type) to indicate which laptop has taken control.

[0073] In yet another embodiment where a laptop source user has a touch screen phone or other palm type computing device in addition to the laptop/source, a widget may be provided via the palm type device where the widget size can be enlarged to include much of the display. To this end see FIG. **17** that shows a palm type device **120** that includes a large touch screen where a virtual puck palm device **120** and laptop **69** would have to be associated in some way so that palm device control would cause the correct/associated laptop information to drive appropriate displays **22***a*-**22***d*.

[0074] In a wireless system where a widget or virtual control interface is presented via a display screen, the control interface may take any of several different forms. For instance, where a configuration includes four common displays (see FIG. **1**), the control interface **130** may have an appearance as in FIG. **18** that shows screen selections in a pattern that mimics the pattern of the four display screens **22***a*-**22***d*. Where a system includes only two displays (see FIG. **13**), the virtual control interface may only include an image of two selectable displays, and so on.

[0075] Referring to FIG. **19**, in wireless embodiments, a mechanical control interface **140** akin to puck **48** described above may be provided where the interface **140** links to a USB port or the like on a laptop **69**. Here, interface **140** operates in the same fashion as puck **48** described above except that control signals from interface **140** are provided to a switching device wirelessly through the laptop. In this case interface **140** still provides a visual queue to conference participants using configuration **10***b* indicating which laptop(s)/source(s) is being used to drive the displays.

[0076] In some embodiments one or more projectors (not illustrated) may replace the displays **22***a*-**22***d*. Where a system includes a single projector, the projected image may be divided into two, four, etc., separate presentation spaces where each switching device output **44** drives a different one of the presentation spaces so that multiple sources can be used to display in different spaces simultaneously.

[0077] Several specific embodiments of the present invention have been described above. It should be appreciated that in the development of any such actual implementation, as in any engineering or design project, numerous implementation-specific decisions must be made to achieve the developers' specific goals, such as compliance with system-related and business related constraints, which may vary from one implementation to another. Moreover, it should be appreciated that such a development effort might be complex and time consuming, but would nevertheless be a routine undertaking of design, fabrication, and manufacture for those of ordinary skill having the benefit of this disclosure.

[0078] For example, while the pucks **48** described above include illumination devices controllable to indicate different states, it should be appreciated that other indicators that can visually distinguish states are contemplated. For instance, each button **60***a*-**60***d* in FIG. **4** may include a liquid crystal display type device where different cross hatching indicates different statuses. As another example, in at least some embodiments it is contemplated that each time a presentation state changes, a puck or other system component may generate an audible signal to indicate a state change (see audio generator **77** in FIG. **5**). In addition, while the embodiments illustrated include two or four displays supported by a totem, it should be appreciated that the illustrated embodiments are only exemplary and that other numbers of displays may be supported by a totem or that displays may in some cases be mounted to a wall or other supporting structure proximate a conferencing table.

[0079] Thus, the invention is to cover all modifications, equivalents, and alternatives falling within the spirit and scope of the invention as defined by the following appended claims.

What is claimed is:

1. A method of selecting information from a video source to be displayed on at least a first common display screen in a collaborative workspace having a switching device, the method comprising the steps of:

providing a selectable control interface that includes at least one indicator that can indicate at least first and second different states;

associating a video source with the switching device so that video information from the video source is presented to the switching device;

when the video source is associated with the switching device, causing the at least one indicator to indicate a first state; and

when the selectable control interface is selected, causing the at least one indicator to indicate the second state and providing the video information from the video source to the common display screen via the switching device.

2. The method of claim **1** wherein the step of providing a selectable control interface includes providing a mechanical interface that includes at least one selectable button.

3. The method of claim **2** wherein the mechanical interface includes a first cable linkable to the video source and a second cable which links to the switching device and wherein the step of associating a video source with the switching device includes linking the first cable to the video source.

4. The method of claim **3** wherein the indicator includes at least a first illumination device wherein the steps of causing the at least one indicator to indicate the first and second states includes causing the illumination device to light up first and second different colors, respectively.

5. The method of claim **4** wherein the control interface forms a substantially flat upper surface and wherein the at

least a first illumination device transmits light around a periphery of the flat upper surface.

6. The method of claim **1** further including the step of, while the video information from the video source is provided to the shared display screen via the switching device, when the selectable control interface is selected a second time, causing the at least one indicator to indicate the first state and blocking the video information from the video source to the shared display screen via the switching device.

7. The method of claim **1** for use with a system that includes a plurality of common display screens wherein the selectable control interface includes a separate selectable control for each of the plurality of display screens and wherein the at least one indicator includes a separate illumination device for each of the separate selectable controls, the step of causing the at least one indicator to indicate the first state including causing each illumination device associated with a common display screen to generate light of a first color indicating the first state and wherein, when any one of the control interfaces is selected, the method further includes the steps of:

causing the illumination device associated with the selected control to indicate the second state; and

providing the video information from the video source to the common display screen associated with the selected control.

8. The method of claim **1** further including the steps of providing a second selectable control interface that includes at least one indicator that can indicate at least first and second different states;

associating a second video source with the switching device so that video information from the second video source is presented to the switching device;

when the second video source is associated with the switching device, causing the at least one indicator on the second control interface to indicate the first state; and

when the second selectable control interface is selected, causing the at least one indicator on the second control interface to indicate the second state and providing the video information from the second video source to the common display screen via the switching device irrespective of which source was providing video information to the common display screen prior to selection of the second selectable control interface device.

9. The method of claim **1** wherein the video source is a computer including a display screen and wherein the control interface appears on the computer display screen for selection.

10. The method of claim **9** wherein communication between the computer and the switching device is wireless.

11. A method of selecting information from a video source to be displayed on a subset of M common display screens in a collaborative workspace having a switching device, the method comprising the steps of:

providing a control interface that includes N selectable controls wherein N is at least as great as M and wherein each control is associated with a separate indicator and each indicator may assume at least first and second visually distinguishable states;

associating a video source with the switching device so that video information from the video source is presented to the switching device; and

when the video source is associated with the switching device, causing a separate indicator for each of the M common display screens to assume the second visual state while the other N-M indicators remain in the first visual state.

12. The method of claim **11** wherein each control includes a separate illumination device which may be illuminated to indicate at least one of the first and second states.

13. The method of claim **12** wherein each control indicates the second state by exciting an associated illumination device and indicates the first state by cutting off power to the illumination device.

14. The method of claim **11** wherein each of the indicators may assume a third visually distinguishable state, the method further including the steps of, when any of the selectable controls is selected, causing the indicator associated with the selected control to indicate the third state and providing the video information from the video source to the common display screen via the switching device.

15. The method of claim **11** wherein the control interface is provided via a representation on a computer display screen.

16. The method of claim **11** wherein the step of providing a control interface includes providing a mechanical interface that includes a cable and wherein the step of associating a video source with the switching device includes linking the video source to the mechanical interface via a cable.

17. An apparatus for selecting information from a video source to be displayed on at least a first common display screen in a collaborative workspace having a switching device, the apparatus comprising:

a control interface that includes at least a first indicator that can visually indicate at least first, second and third visually distinguished states wherein the control interface indicates the first state when a video source is disassociated with the switching device, the second state when the video source is associated with the switching device and video information from the video source is not presented via the common display and the third state when the video source is associated with the switching device and video information from the video source is presented via the common display.

18. The apparatus of claim **17** wherein the at least a first indicator includes an illumination device and wherein the first state is indicated by cutting power to the illumination device, the second state is indicated via illumination of a first color and the second state is indicated via illumination of a second color.

19. The apparatus of claim **17** wherein the control interface includes at least a first selectable control which, when selected, causes the video information from the video source to be presented via the common display and causes the indicator to change from the first state to the second state.

20. An apparatus for selecting information from a video source to be displayed on a subset of M common display screens in a collaborative workspace having a switching device, the apparatus comprising:

a control interface that includes N selectable controls wherein N is at least as great as M and wherein each control is associated with a separate indicator and each indicator may assume at least first and second visually distinguishable states, wherein, when a video source is not associated with the switching device, each indicator indicates the first state and, when a video source is associated with the switching device, a separate indicator for each of the M common display screens assumes the second state while the other N-M indicators remain in the first state.

* * * * *