US005435117A

United States Patent [19]

Eggena

[11] Patent Number: 5,435,117

[45] Date of Patent: Jul. 25, 1995

[54] ROTARY MOWER WITH AUTOMATIC ENGINE CUT OFF

[76] Inventor: Dean A. Eggena, P.O. Box 400, Fawn Lake Rd., Crosslake, Minn. 56442

[21] Appl. No.: 310,855

[22] Filed: Sep. 22, 1994

[51] Int. Cl.[6] A01D 34/64; A01D 34/80; A01D 34/82

[52] U.S. Cl. ..... 56/10.2 D; 56/15.9; 56/11.9

[58] Field of Search ..... 56/10.2 R, 10.5, 11.9, 56/11.3, 11.7, 10.2 D, 10.2 E, 15.9

[56] References Cited

U.S. PATENT DOCUMENTS

3,633,699 1/1972 Bishop ..... 56/11.8 X
3,773,156 11/1973 Nuquist ..... 56/10.2 R
3,874,149 4/1975 Seifert et al. ..... 56/320.2 X
4,126,989 11/1978 Oosterling et al. ..... 56/11.9 X
4,183,195 1/1980 James 56/11.9
4,206,580 6/1980 Traux ..... 56/11.9 X
4,570,425 2/1986 Carr ..... 56/11.9 X

Primary Examiner—Stephen J. Novosad
Attorney, Agent, or Firm—Kinney & Lange

[57] ABSTRACT

A rotary mower includes a housing which contacts a ground surface to be mowed, a blade mounted for rotation in the housing a motor mounted to the housing for driving the blade, and an actuator mechanism for disabling rotation of the blade when the housing is displaced a predetermined distance from the ground surface.

19 Claims, 4 Drawing Sheets

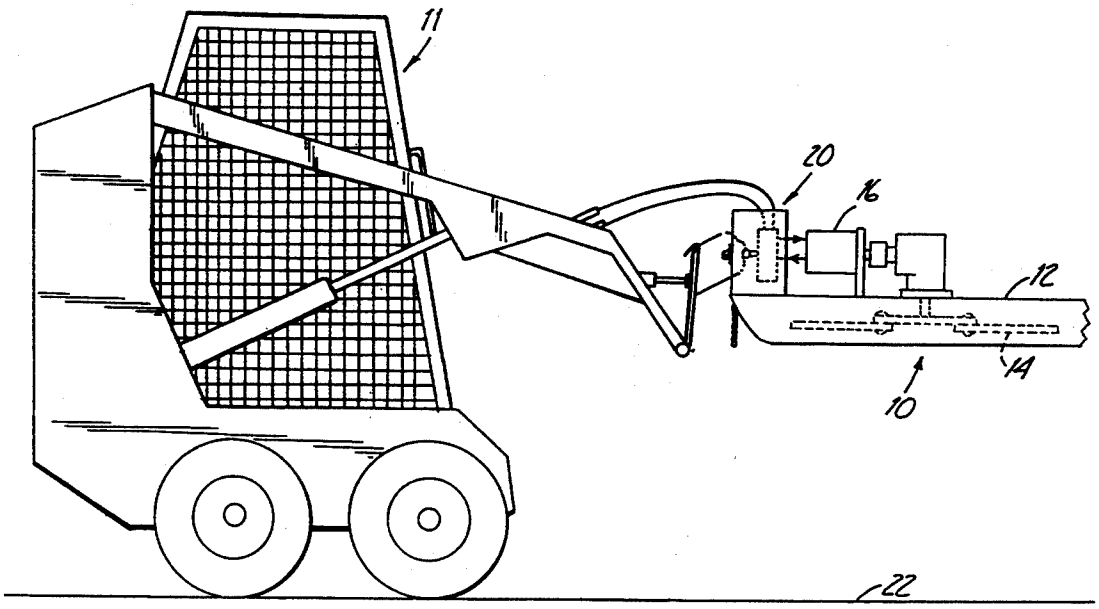

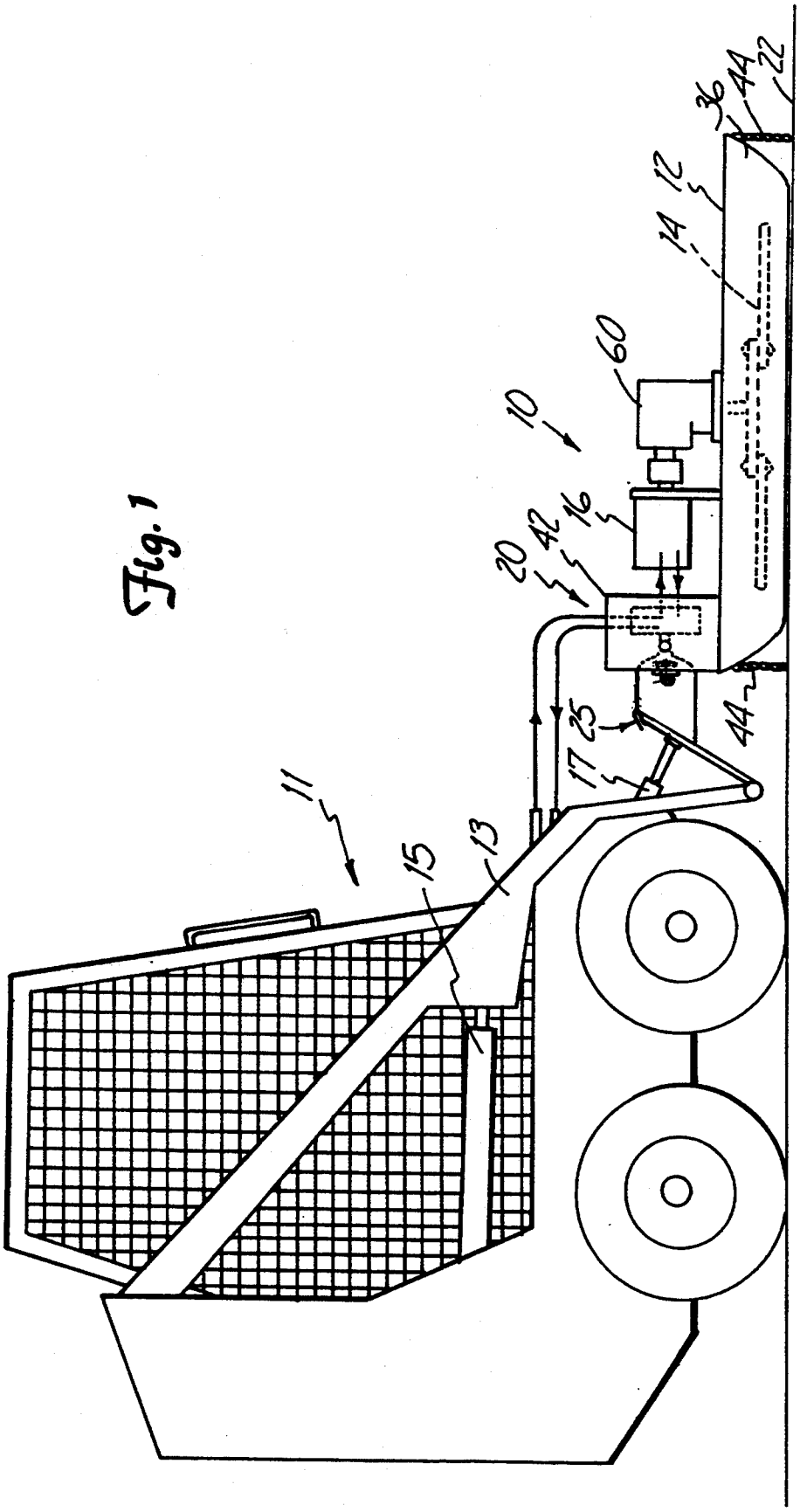
Fig. 1
10
11
12
13
14
15
16
17
20
22
25
36
42
44
44
60

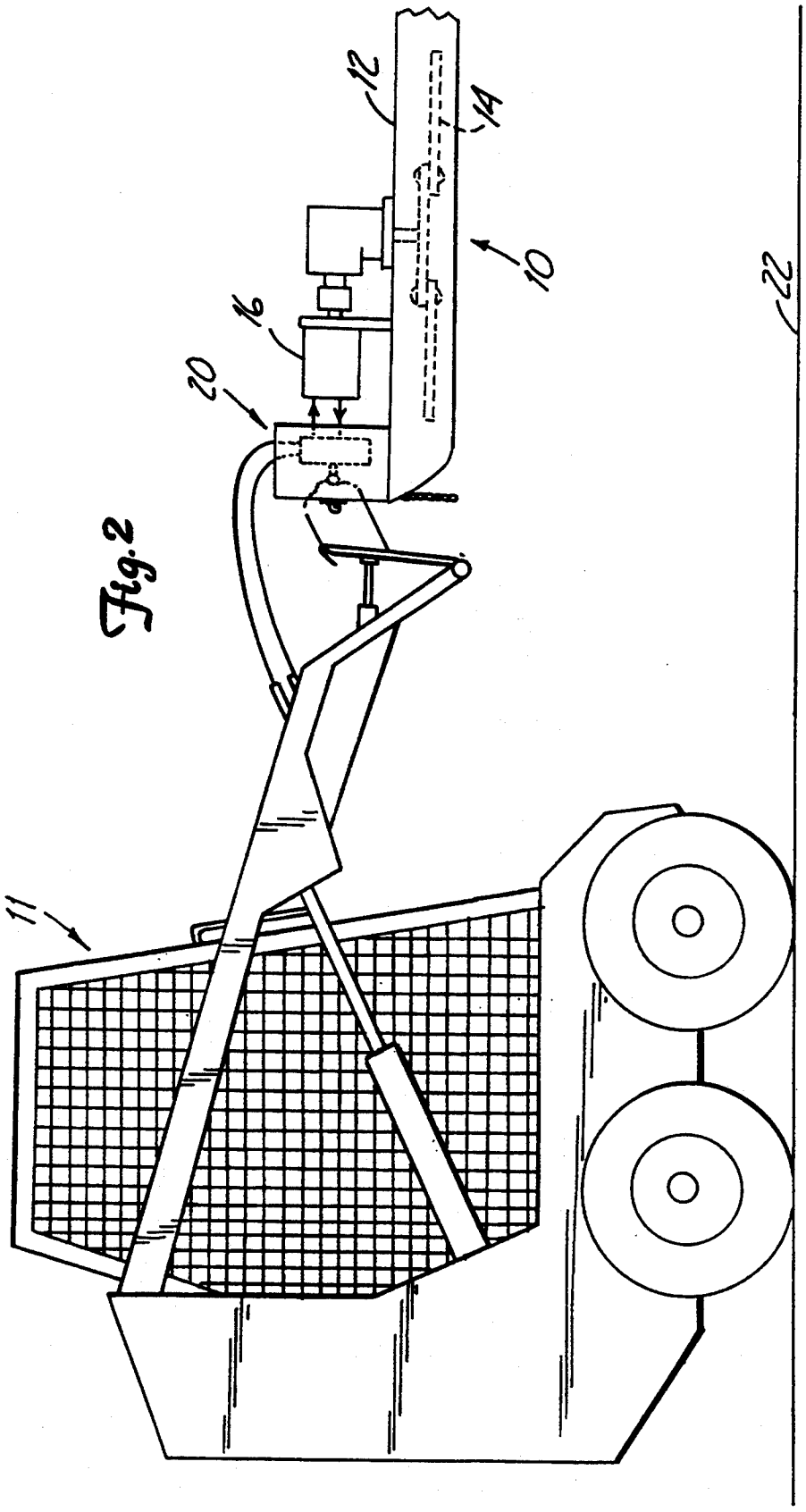

Fig. 2

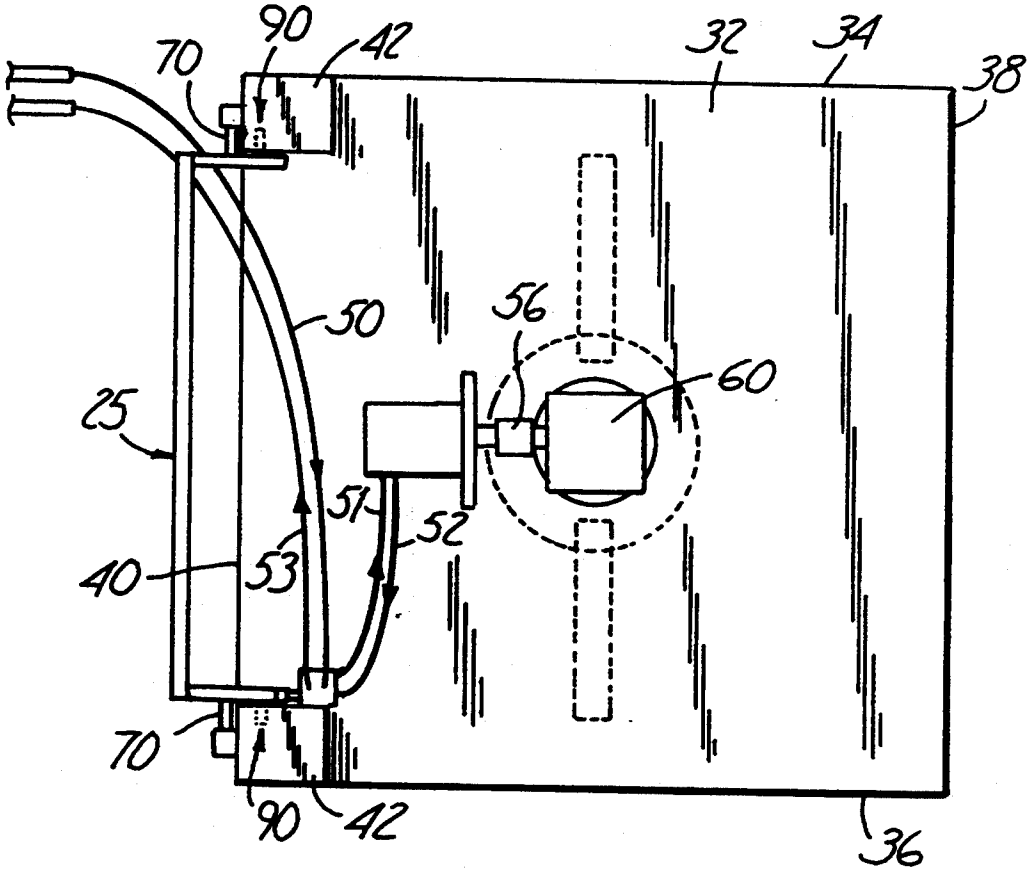

Fig. 3

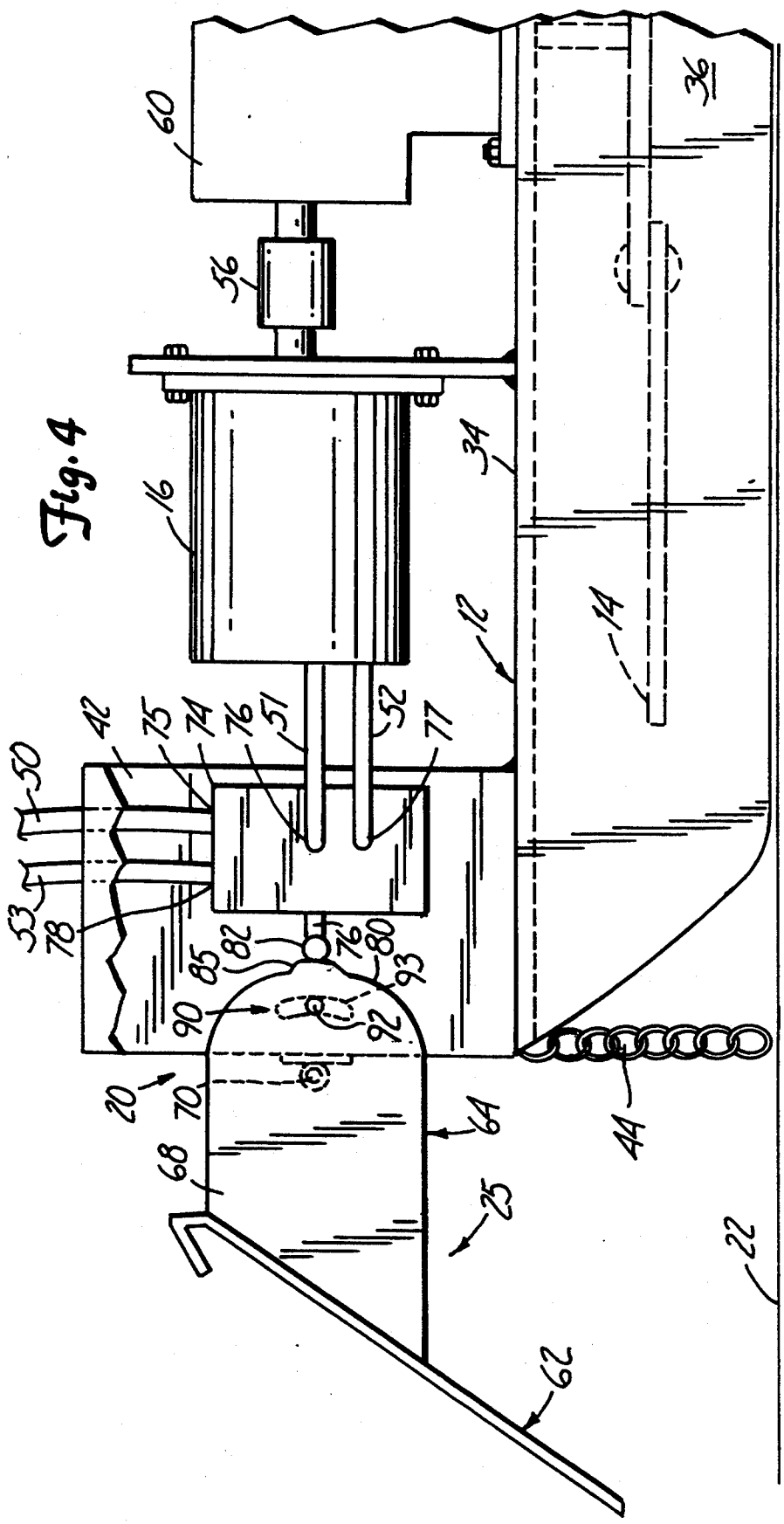
60
56
16
34
36
12
14
42
75
74
76
51
52
77
50
53
78
82
85
76
80
93
90
92
20
70
68
64
25
44
22
62

Fig. 4

ROTARY MOWER WITH AUTOMATIC ENGINE CUT OFF

BACKGROUND OF THE INVENTION

The present invention relates to rotary mowers and brush cutters (hereinafter collectively referred to as rotary mowers), which run over a ground surface and which have a cutting blade for cutting grass, weeds, brush and the like, and more particularly, to a motorized rotary mower having an automatic engine cut off or blade control.

There are two basic types of rotary mowers: free standing rotary mowers and rotary mower attachment units. Free standing rotary mowers are independent units which include a mower deck, a cutting blade contained within the mower deck, either an electric or a gas engine for driving the cutting blade, and a frame structure including a wheel base allowing the mower deck to be over a ground surface. Rotary mower attachment units are for use with skid steer loaders or other self-powered vehicles. These rotary mower attachment units include a mower deck, a cutting blade contained within the mower deck, a motor for driving the cutting blade, and a mounting plate for mounting the rotary mower attachment to the loader or other vehicle. The motor of the rotary mower attachment units is powered by the energy produced by the serf-powered vehicle to which the unit is attached. For example, rotary mower attachment units for skid steer loaders often include hydraulic motors which are connected to the hydraulic system of the loader.

One of the problems common to all mowers and in particular to rotary mower attachment units is that the cutting blade continues to rotate regardless of the positioning of the mower deck. Some mowers include hand-operated blade cut-off switches which deactivate the entire mower when the operator releases the switch. However, a dangerous and unsafe situation persists with all rotary mowers in that when the mower deck is pivoted or raised off the ground surface for transport or for avoiding objects on the ground surface, the blade is exposed and continues to rotate.

SUMMARY OF THE INVENTION

The present invention relates a rotary mower having a housing in contact with a ground surface to be mowed, a blade mounted for rotation within the housing, a motor mounted to the housing for driving the blade, and an actuator or control mechanism for disabling rotation of the blade when the housing is displaced a predetermined distance from the ground surface. The actuator mechanism thus reduces or eliminates the unsafe situation where the rotating blade is exposed when the mower deck is raised.

If the present invention is embodied on a rotary mower attachment unit, a mounting plate is provided for mounting the housing to an externally driven vehicle such as a skid steer loader. The ends of the mounting plate are hingedly attached to the housing such that the housing pivots with respect to the mounting plate thereby triggering the actuator mechanism. If a hydraulic motor is employed, the actuator mechanism includes a diverter valve, an actuator button and a cam surface. The diverter valve diverts hydraulic fluid from the hydraulic motor when the end of the housing is a predetermined distance from the ground surface. The actuator button operates with the diverter valve and the cam surface such that as the end of the housing moves out of contact with the ground surface the actuator button moves along the cam surface until the actuator button reaches a predetermined position wherein the diverter valve is activated.

It is to be understood that the present invention may be embodied in any type of mower, regardless of the type of motor employed for driving the cutting blade.

BRIEF DESCRIPTION OF THE DRAWINGS

FIG. **1** is a side elevation of a skid steer loader with a rotary mower attachment unit according to the present invention, the rotary mower attachment unit being shown in a first position;

FIG. **2** is a side elevation of a skid steer loader and rotary mower attachment unit with the rotary mower attachment unit shown in a second position;

FIG. **3** is a top plan view of the rotary mower attachment unit; and

FIG. **4** is an enlarged side elevation of a portion of the rotary mower attachment unit.

DETAILED DESCRIPTION OF THE PREFERRED EMBODIMENTS

It is to be understood that the present invention has application to any type of rotary mower regardless of whether the mower is an attachment unit or a free standing unit. In addition, the present invention has application to any rotary mower regardless of the type of motor used to rotate the blade and may be used with, for example, gas powered, electric or hydraulic motors. Thus, while the present invention is described with reference to a hydraulically operated rotary mower attachment unit **10** for a skid steer loader **11**, additional applications will be apparent.

As shown in FIGS. **1** and **2**, the rotary mower attachment unit **10** includes a mower deck or housing **12**, a cutting blade **14** rotatable within the mower deck **12**, a motor **16** for driving the blade **14**, and a blade cut off mechanism **20** for disabling rotation of the blade **14** when an end of the mower deck **12** is raised a predetermined distance from a ground surface **22**. As soon as the end of the mower deck **12** returns below the predetermined distance from the ground surface **22** the blade **14** is again enabled for cutting. A mounting plate **25** attaches the rotary mower attachment unit **10** to a boom arm **13** of the skid steer loader **11**. The rotary mower attachment unit **10** may be displaced with respect to the ground surface by operation of a boom arm hydraulic piston and cylinder **15** or a bucket-tip hydraulic piston and cylinder **17**.

The mower deck **12**, the cutting blade **14**, and the motor **16** are conventional components well known in the art of rotary mowers and so are only explained briefly herein.

As shown in FIG. **3** the mower deck **12** is of a generally square, metallic construction and includes a top surface **32**, a first side surface **34**, a second side surface **36** a front end **38**, a rear end **40**, and a pair of towers **42** in each of the corners at the rear end **40** of the mower deck **12**. Each tower **42** is rectangular and has dimensions of approximately 6" in width, 10" in length, and 12" in height. Each tower **42** is constructed of steel and is welded to the corners of the rear end **40** of the mower deck **12**. Each tower **42** provides a mounting location for the mounting plate, and one of the towers is a housing for the blade cut off mechanism **20** as further de-

scribed below. The first side surface **34** and second side surface **36** extend between a front end **38** and a rear end **40** of the mower deck **12** and run generally in contact with the ground surface **22** to be mowed. The front end **38** and the rear end **40** of the mower deck **12** are open to allow the surface to be mowed to enter the mower deck **12** and be exposed to the cutting blade **14**. A safety chain **44** (see FIGS. **1** and **2**) attached across the front and rear ends **38** and **40** of the mower deck **12** prevents flying debris from exiting the mower deck **12** at high velocities.

The cutting blade **14** includes a center mounting plate and a pair of mower blades attached to the mounting plate 180° apart from each other. The cutting surfaces of the cutting blade **14** are positioned so as to cut in only one direction.

As shown in detail in FIGS. **3** and **4**, the motor **16** is mounted to the top surface **32** of the mower deck **12**. The motor **16** is a hydraulic motor connected to and powered by the hydraulic system (not shown) of the skid steer loader **11** through supply hoses **50** and **51** and return hoses **52** and **53**. The supply hoses **50** and **51** supply hydraulic fluid from the hydraulic system of the skid steer loader **11** to the motor **16**. The return hoses **52** and **53** return hydraulic fluid from the motor **16** to the skid steer loader **11**. A coupling **56** transfers the output of the hydraulic motor **16** to an angle drive **60** which redirects the output of the hydraulic motor **16** to the cutting blade **14**.

The mounting plate **25** includes a mating section **62** fixedly attached to the boom arm **13** of the skid steer load **11** for securing the rotary mower attachment unit **10** to the loader **11**, and a hinge section **64** pivotally attaching the mower deck **12** to the mating section **62**. There are a variety of well known constructions available for the mating section **62** of the mounting plate **25** depending on the particular type and manufacturer of the loader to which the rotary mower attachment unit **10** is mounted. On the other hand, the hinge section **64** of the mounting plate includes a hinge plates **68** at each end of the mating section **62** for engaging the towers **42** in the mower deck **12**, a pair hinge pins **70** for hingedly engaging the hinge plate **68** to towers **42**, and a pair of stop mechanisms **90** for limiting the pivotal range of the mower deck **12**. One of the hinge returns **64** supports a portion of the blade cut off mechanism **20** as further explained below. Each hinge pin **70** is mounted in a free swivel arrangement allowing the mower deck **12** to pivot upward and downward in relation to the fixed mounting plate **25**.

The blade cut off mechanism **20** includes a diverter switch **74** for diverting the hydraulic fluid from passing through the hydraulic motor **16**, and a plunger actuator **76** operable with diverter switch **74** for triggering the diverter switch **74**, and a cam surface **80** and cam follower **82** which control the plunger actuator **76**. The blade cut off mechanism **20** is mounted in one of the towers on the top surface **37** of the mower deck **12**. The diverter switch **74** is a diverter/cushion valve having an supply input **75** for receiving hydraulic fluid from the loader **11** from supply line **50**, a supply output **76** for outputting hydraulic fluid to the hydraulic motor **16** along line **51**, a return input **77** for receiving hydraulic fluid from the hydraulic motor **16** along line **52**, and a return output **78** for returning hydraulic fluid to the loader **11** along line **53**. The diverter/cushion valve is a combination of a diverter valve which diverts the hydraulic fluid away from the hydraulic motor **16** and a cushion valve which provides a controlled cut off of the hydraulic fluid to avoid breakage or jamming of the hydraulic motor **16** coupling or angle drive **60**. A bias spring (not shown) operates the plunger actuator **76** for triggering the diverter/cushion valve. In a normal position (see FIG. **1**) the plunger actuator **76** is compressed and the diverter/cushion valve is in a position permitting hydraulic fluid to flow to the hydraulic motor **16**, while in the cut-off position (see FIG. **2**) the plunger actuator **76** is extended and the diverter/cushion valve is in a position redirecting the hydraulic fluid away from the hydraulic motor **16** and back to the loader **11**. The combination diverter/cushion valve and plunger actuator **76** is available as Part No. RC6030R from J.N. Fauver Company, 10286 W. 70th Street, Eden Prairie, Minn.

The stop mechanism **90** limits the pivotal range of the mower deck **12** and includes a pin **92** mounted to the tower **42** and operable with a slot **93** on the hinge plate. The stop pin **92** moves within the slot **93** thereby allowing the mower deck **12** to pivot in a range determined by the length of the slot **93**. The longer the slot **93** the more angle is achieved between the mower deck **12** and the mounting plate **25** and this varies depending on the application. When the boom arm piston **15** or bucket-tip piston **17** is activated the rear end of the mower deck **12** is raised upward. At a predetermined distance above from the ground surface the stop pin **92** engages a lower edge of the slot **93** thereby allowing the entire mower deck **12** to be raised off the ground surface **22** to transport the rotary mower attachment unit **10** or to move the mower deck **12** if it becomes stuck in mud or the like or in the event of an unmowable obstacle on the ground surface.

The cam surface **80** is located on the end of the hinge plate **68**. The cam surface **20** includes a center ridge **85** and recessed portions on either side of the ridge **85**. In the run position the cam follower **82** is positioned on the ridge **85** such that hydraulic fluid flows through the diverter/cushion valve into the hydraulic motor **16**. In the run position both ends of the mower deck **12** are in contact with and parallel to the ground surface. If the boom **13** is raised or lowered so that an end of the mower deck **12** is displaced with respect to the ground surface, the cam follower **82** rolls off the ridge **85** and the plunger actuator **76** thereby activates the diverter/-cushion valve to redirect the hydraulic fluid flowing out supply output **76** back through the return outlet **78** such that no hydraulic fluid passes along lines **51** and **52** to or from the hydraulic motor **16**.

The length of the ridge **85** determines the distance above the ground surface **22** which an end of the mower deck **12** must be raised in order to deactivate the cutting blade **14**. The longer the ridge **85** the greater the pivot angle between the mower deck **12** and the mounting plate **25** needed in order for the plunger actuator **76** to activate the diverter/cushion valve and cut off hydraulic fluid to the hydraulic motor **16**. In other words, the shorter the ridge **85** the lower the displacement of an end of the mower deck **12** with respect to the ground surface **22** needed and the larger the ridge **85** the greater the displacement of an end of the mower deck **12** needed in order to stop cutting blade **14**.

It is to be understood that the plunger actuator **76**, cam follower **82** and cam surface **80** may be arranged such that the cam surface includes actuator **76** a central recess surrounded by ridges when the mower deck **12** is in full contact with the ground surface **22** and that upon

movement of the mounting plate **25** with respect to the mower deck **12** the plunger actuator **76** is depressed thereby activating the diverter/cushion valve. The former arrangement is preferred in that it provides a fall-/safe "off" position in the event of a malfunction in the blade cut off mechanism **20** wherein the cutting blade **14** in not engaged.

In operation, the rotary mower attachment unit **10** is mounted on the boom arm **13** of the skid steer loader by engagement of the mounting plate **25** to a corresponding section or the bucket tip. The bucket tip hydraulic cylinder **17** is adjusted to maintain the mower deck **12** in full contact with Found surface and such that the actuator plunger **76** is centered on the ridge **85** of the cam surface **80**. In this position hydraulic fluid from the hydraulic system of the loader **11** flows through the hydraulic hoses **50–53** and diverter/cushion valve into the hydraulic motor **16** for rotating the cutting blade **14**. As the mower deck **12** skids along the ground surface **22** the mower deck **12** pivots about of the hinge pin **70** with respect to the mounting plate **25**. The length of the ridge **85** of the cam surface **80** is selected such that the general movement of the mower deck **12** along the ground surface **22** does not actuate the diverter/cushion valve. However, when either the hydraulic cylinder **12** for the bucket tip or the hydraulic cylinder **15** for the boom arm **11** is moved such that the mower deck **12** is displaced from the ground surface **22** for avoiding unmowable objects on the ground surface or for transport or the like. The angle between the mower deck **12** and the hinge plate **25** changes. The angle changes to the point where the cam follower **82** rolls off the ridge **85** into the recess such that the plunger actuator **76** thereby triggers the diverter/cushion valve to cut off the flow of hydraulic fluid to the hydraulic motor **16**. More particularly, hydraulic fluid entering the supply inlet **75** of the diverter/cushion valve along the supply line **50** is redirected to the return outlet **78** of the diverter/cushion valve back to the loader **11** along return line **53**. Thus, with no hydraulic fluid flowing through the hydraulic motor **16** the cutting blade **14** does not rotate. As the mower deck **12** continues to be raised off the ground surface the pin **92** engages the slot **93** of the tower **42** to fix the angle of the mower deck **12** with respect to the mounting plate **25** for transport of the rotary mower attachment unit **10**. The length of the slot is selected with respect to the length of the ridge **85** of the cam surface **85** such that the hydraulic motor **16** is always cut off before the pin **92** engages an end of the slot **93**. Upon placement of the mower deck **12** back in contact with the ground surface **22** the cam follower **82** again is moved onto the ridge **85** thereby resetting the diverter/cushion valve to its original position where the hydraulic fluid flows through the supply outlet **76** along supply line **51** into the hydraulic motor **16** and back through the return line **52** into return inlet **77** such that the cutting blade **14** is again rotated.

Although the present invention has been described with reference to preferred embodiments, workers skilled in the art will recognize that changes may be made in form and detail without departing from the spirit and scope of the invention.

What is claimed:

1. A rotary mower comprising:

a housing;

a blade mounted for rotation within the housing;

a motor mounted to the housing for driving the blade; and

an actuator mechanism for disabling rotating of the blade in response to raising of the housing a predetermined distance from the ground surfaces.

2. The rotary mower of claim **1**, further comprising:

mounting means for mounting the housing to an external powered vehicle.

3. The rotary mower of claim **2**, wherein the mounting means includes a mounting plate having a first portion which mounts to the external powered vehicle and a second portion hingedly attached to the housing such that the housing pivots with respect to the mounting plate.

4. The rotary mower of claim **3**, wherein the actuator mechanism includes means for sensing the pivoting of the housing with respect to the mounting plate.

5. The rotary mower of claim **3**, further comprising:

stop means mounted to the mounting plate and operable with the housing for limiting the pivotal movement of the housing with respect to the mounting plate.

6. The rotary mower of claim **1**, wherein the motor is a hydraulic motor and wherein hydraulic hoses feed hydraulic fluid from the externally powered vehicle to the hydraulic motor.

7. The rotary mower of claim **6**, wherein the actuator mechanism includes a diverter valve mounted to the hydraulic hoses and operable with the hydraulic motor such that the hydraulic fluid is diverted from the hydraulic motor when the housing is displaced the predetermined distance from the ground surface.

8. The rotary mower of claim **7**, wherein the actuator mechanism includes an actuator button operable with the diverter valve and a cam surface operable with the actuator button such that as the housing moves out of contact with the ground surface the actuator button moves along the cam surface until the actuator button reaches the predetermined position wherein the diverter valve is activated.

9. The rotary mower of claim **8**, wherein the actuator means further includes a cushion valve.

10. The rotary mower of claim **1**, wherein the actuator mechanism includes a means for sensing pivotal movement of the housing with respect to the ground surface.

11. The rotary mower of claim **10**, further comprising:

stop means for limited the pivotal movement of the housing.

12. In a rotary mower having a mower deck, a blade within the mower deck, and a motor for driving the blade, improvement comprising a control switch for disabling rotation of the blade in response to displacing the mower deck a predetermined distance from the ground surface and for enabling rotation of the blade in response to positioning of the mower deck a distance from the ground surface which is less than the predetermined distance from the ground surface.

13. The rotary mower of claim **12**, wherein the control switch diverts power to the motor when the mower deck is not parallel with the ground surface such that the rotation of the blade is stopped.

14. The rotary mower of claim **12**, further comprising:

mounting means for mounting the mower deck to a skid steer loader.

15. The rotary mower of claim **14**, wherein the mounting means includes a mounting plate having ends

hingedly attached to the mower deck such that the mower deck pivots with respect to the mounting plate.

16. The rotary mower of claim **15**, wherein the control switch includes means for sensing the pivoting of the mower deck with respect to the mounting plate.

17. The rotary mower of claim **15**, further comprising:

a stopping member on the mounting plate, the stopping member being operable with the mower deck for limiting the pivotal movement of the mower deck with respect to the mounting plate.

18. The rotary mower of claim **14**, further comprising:

a cam follower operable with the control switch; and

a cam surface on the mounting plate, the cam surface being operable with the cam follower such that as the mower deck is pivoted away from the ground surface the cam follower moves along the cam surface the predetermined distance until the control switch is activated.

19. The rotary mower of claim **12**, further comprising:

a cam follower operable with the control switch; and

a cam surface operable with the cam follower such that as the mower deck is pivoted away from the ground surface the cam follower moves along the cam surface the predetermined distance until the control switch is activated.

* * * * *

UNITED STATES PATENT AND TRADEMARK OFFICE

CERTIFICATE OF CORRECTION

PATENT NO. : 5,435,117

DATED : July 25, 1995

INVENTOR(S) : DEAN EGGENA

It is certified that error appears in the above-indentified patent and that said Letters Patent is hereby corrected as shown below:

Col. 1, line 28, delete "serf-powered", insert --self-powered--

Col. 5, line 4, delete "fall-", insert --fail- --

Col. 5, line 13, delete "found", insert --ground--

Signed and Sealed this

Tenth Day of October, 1995

Attest:

Attesting Officer

BRUCE LEHMAN

Commissioner of Patents and Trademarks

DAVID'S DOZER EXHIBIT 2004-010