US 20090052457A1

(19) United States

(12) Patent Application Publication

Salama et al.

(10) Pub. No.: US 2009/0052457 A1

(43) Pub. Date: Feb. 26, 2009

(54) METHOD AND APPARATUS FOR AUTOMATIC INTER-DOMAIN ROUTING OF CALLS

(75) Inventors: **Hussein Farouk Salama**, Sunnyvale, CA (US); **David R. Oran**, Acton, MA (US); **Dhaval N. Shah**, Santa Clara, CA (US)

Correspondence Address:
Stolowitz Ford Cowger LLP
621 SW Morrison St, Suite 600
Portland, OR 97205 (US)

(73) Assignee: **Cisco Technology, Inc.**, San Jose, CA (US)

(21) Appl. No.: **12/258,590**

(22) Filed: **Oct. 27, 2008**

Related U.S. Application Data

(63) Continuation of application No. 10/426,459, filed on Apr. 29, 2003, now Pat. No. 7,457,290, which is a continuation of application No. 09/225,921, filed on Jan. 5, 1999, now Pat. No. 6,584,093.

(60) Provisional application No. 60/097,866, filed on Aug. 25, 1998.

Publication Classification

(51) **Int. Cl.**
H04L 12/56 (2006.01)

(52) **U.S. Cl.** **370/392**

(57) **ABSTRACT**

A method and apparatus for inter-domain routing of calls in a network, where the network represents a first wide area network. A routing node of the network advertises its access to a range of addresses in a second wide area network and a cost for access to the range of addresses to all adjacent nodes in the network. Each of the adjacent nodes inserts an entry in its own routing table associating access to the range of addresses in the second wide area network with the network address of the routing node and the cost for access. Each adjacent node then modifies the cost for access by adding its own cost and advertises its access to the range of addresses in the second wide area network and the modified cost for access to all of its adjacent nodes. When a call addressed to a destination address in the range of address in the second wide area network is received at each node of the network, then the node searches for the entry in its routing table corresponding to the range of addresses in the second wide area network having the lowest cost for access and connects the call to the adjacent node associated with the entry having the lowest cost. The routing node can also advertise one or more protocol types which it can support, where the protocol types are associated with the routing node in the routing table in each adjacent node and a call having a given protocol type is also routed at each node of the network based upon its protocol type.

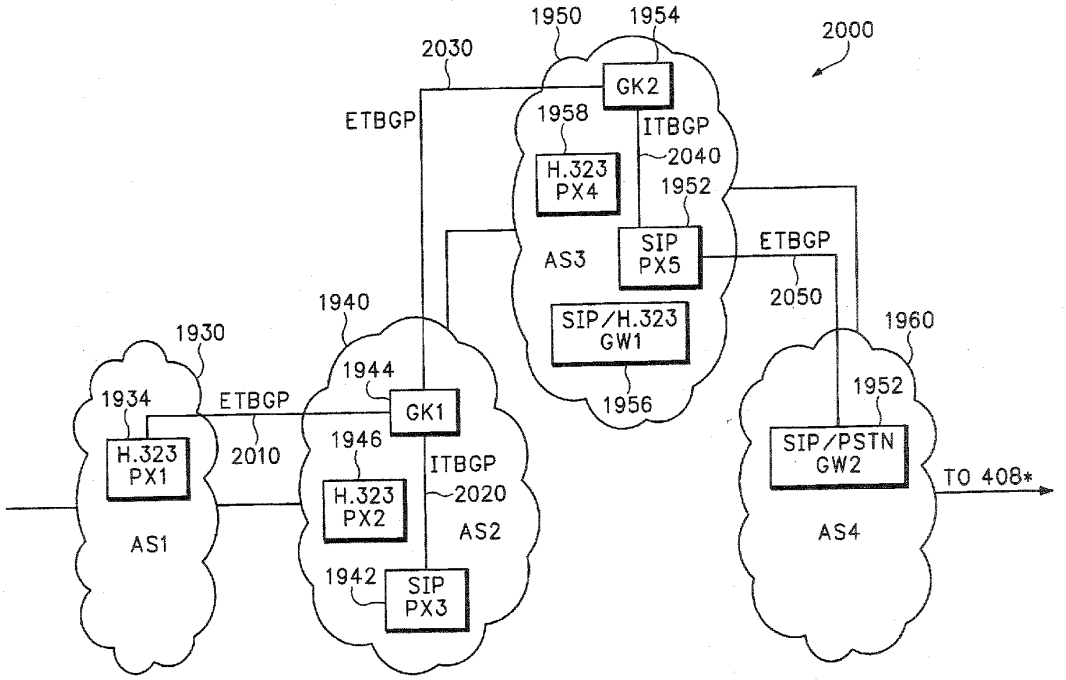

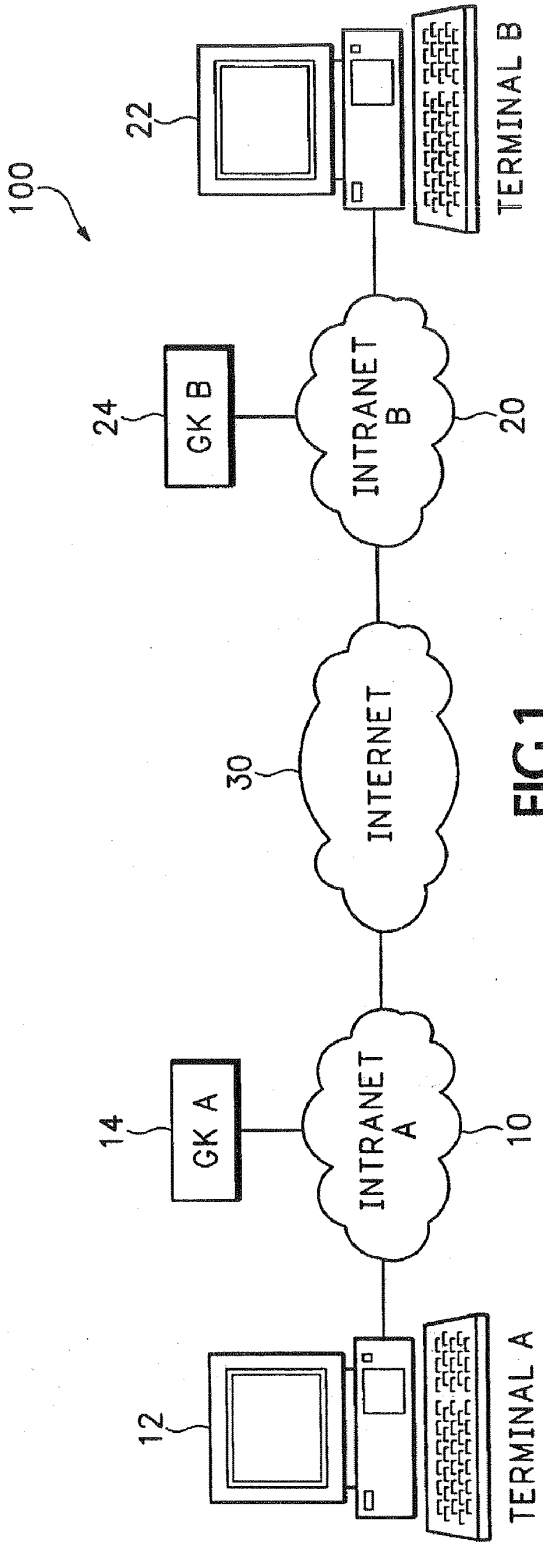

FIG.1
(PRIOR ART)

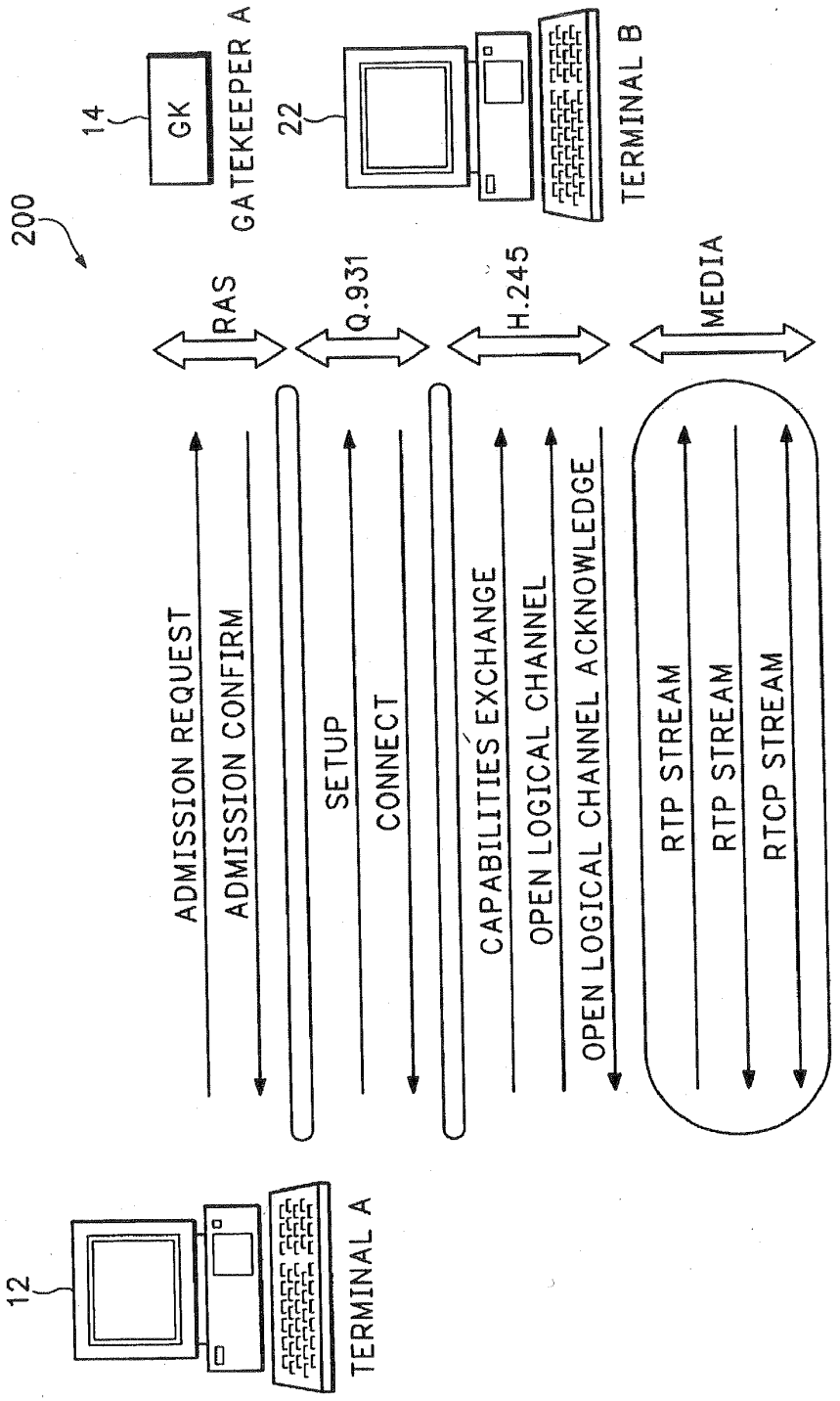

FIG.2
(PRIOR ART)

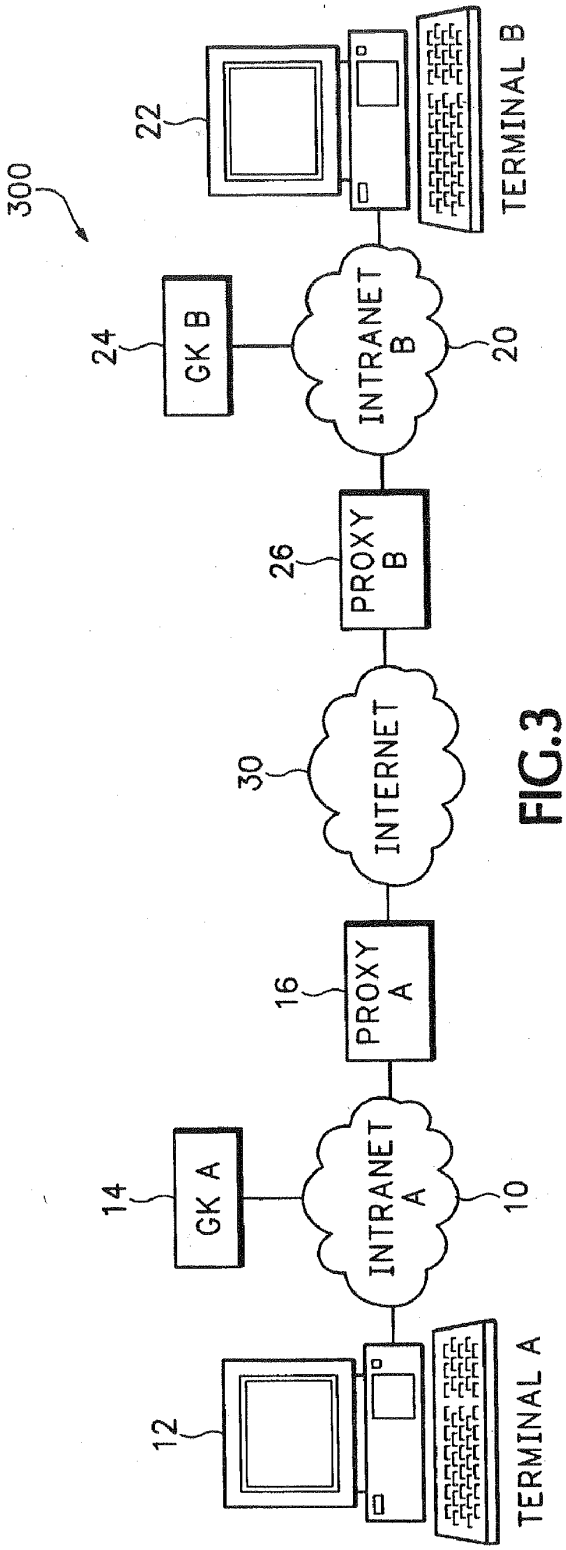

FIG.3
(PRIOR ART)

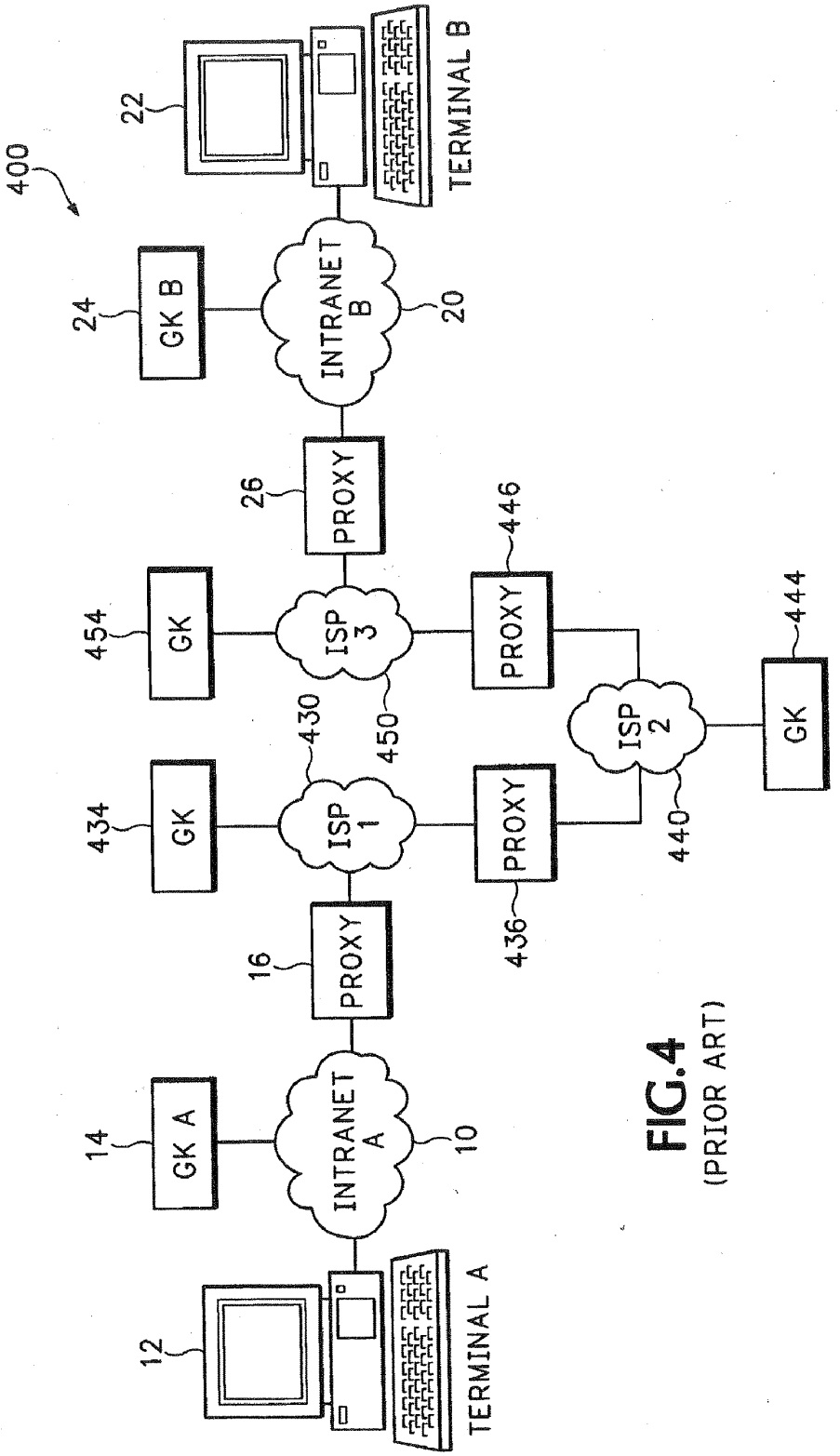

FIG.4
(PRIOR ART)

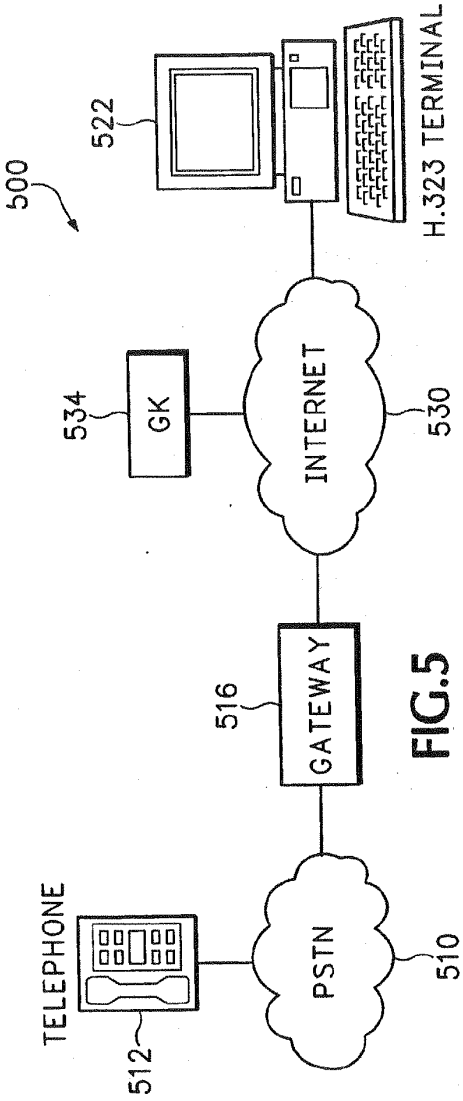

FIG.5
(PRIOR ART)

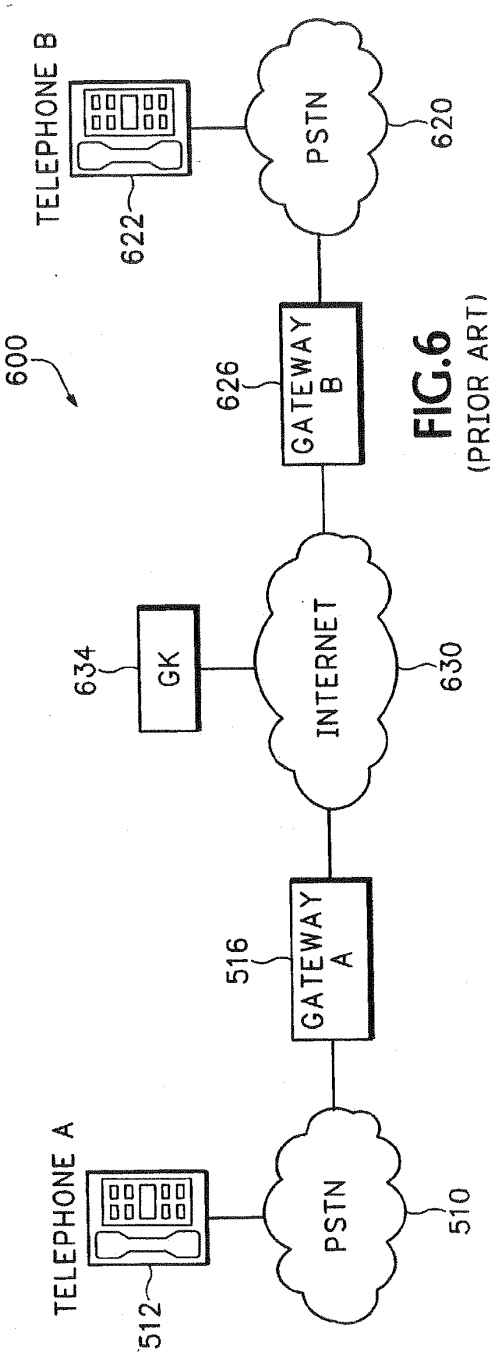

FIG.6
(PRIOR ART)

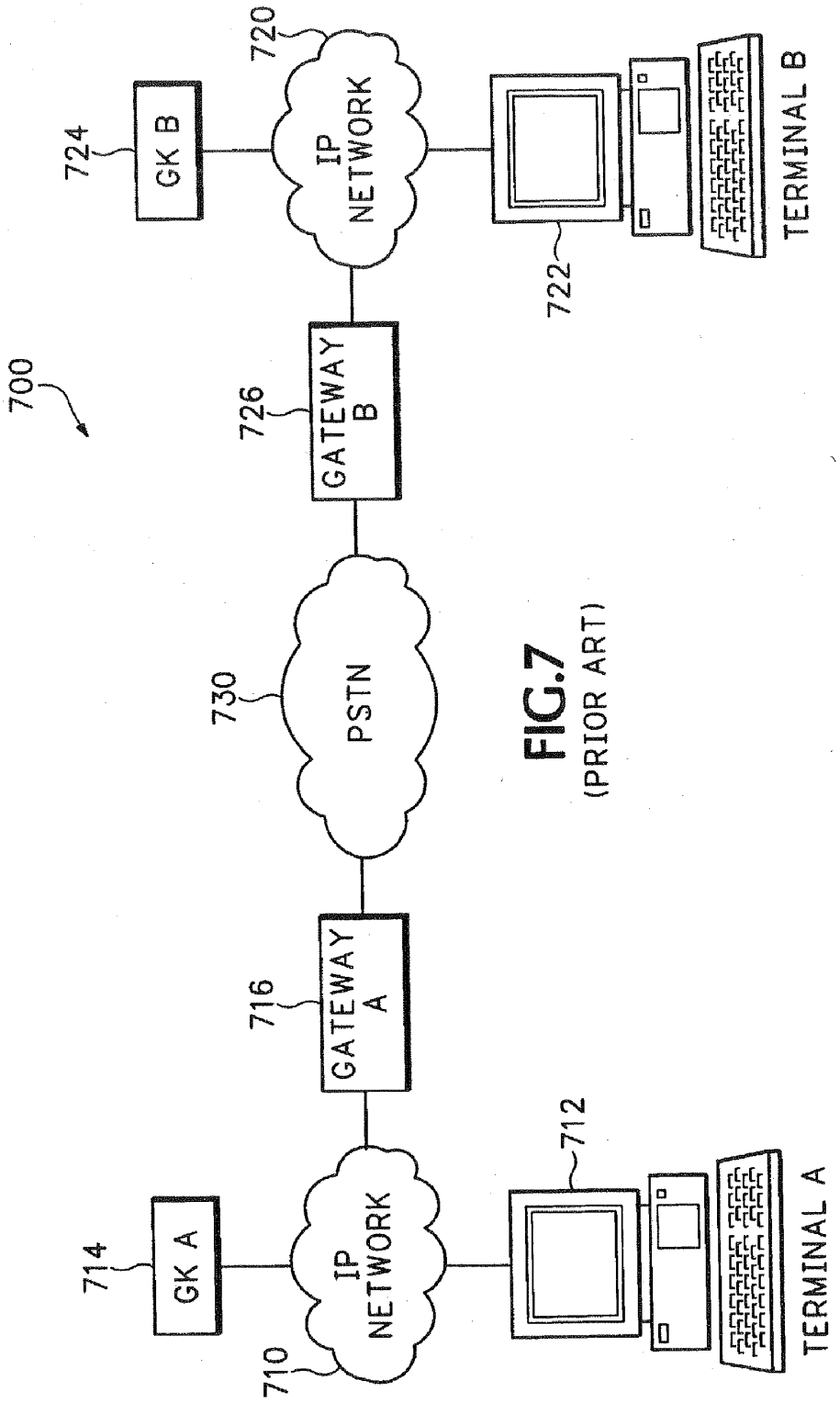

FIG.7
(PRIOR ART)

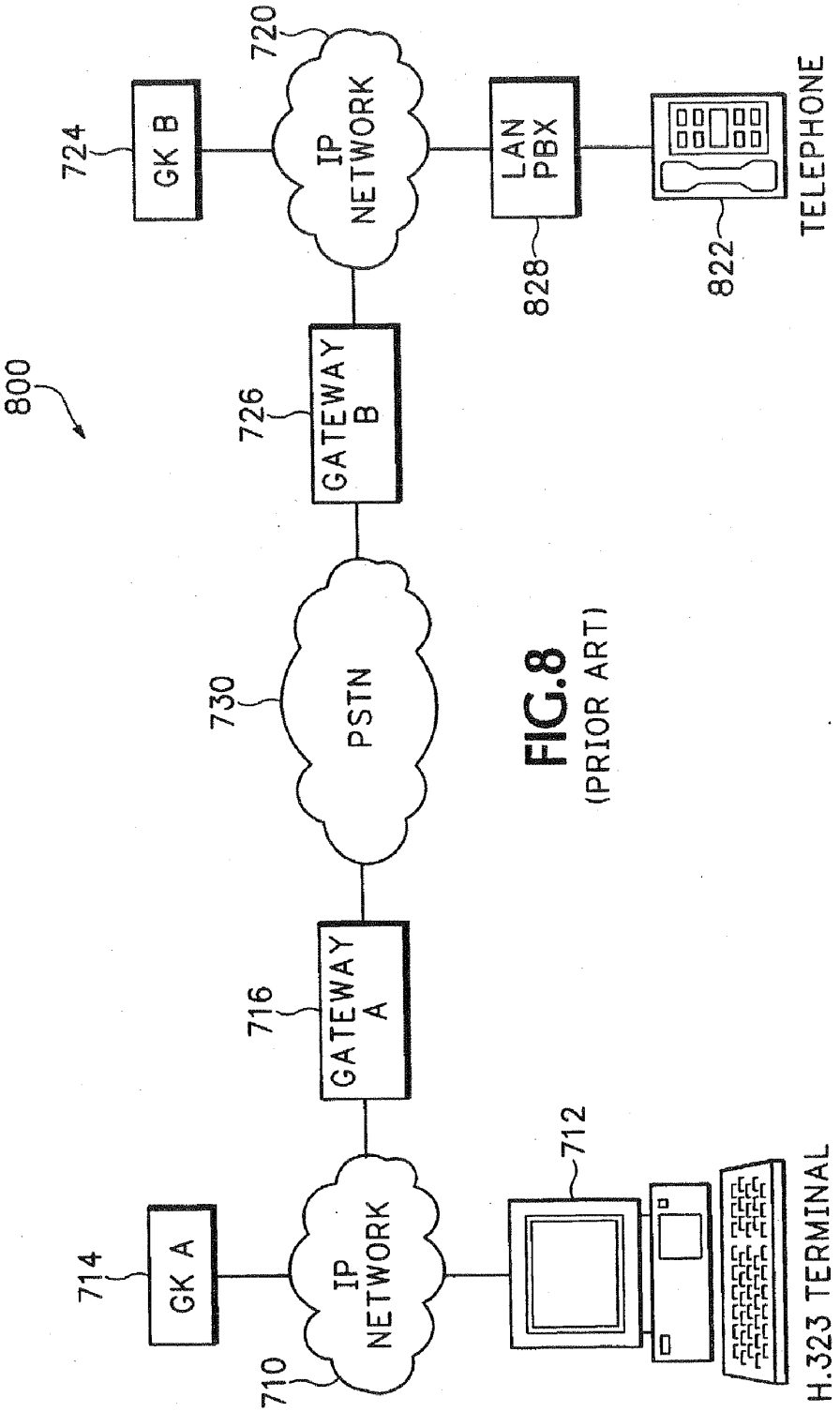

FIG.8
(PRIOR ART)

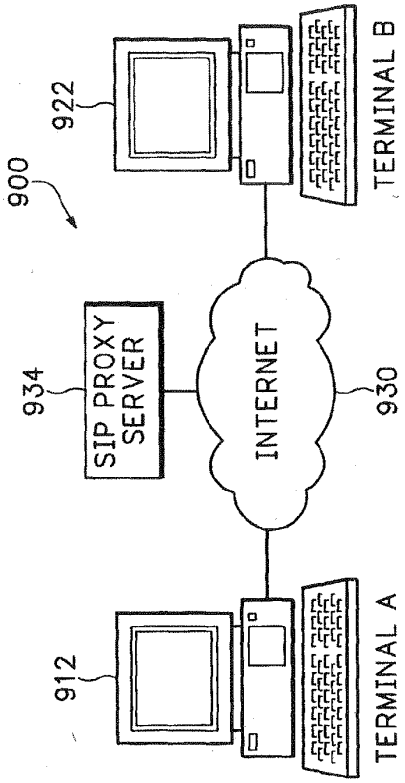

FIG.9
(PRIOR ART)

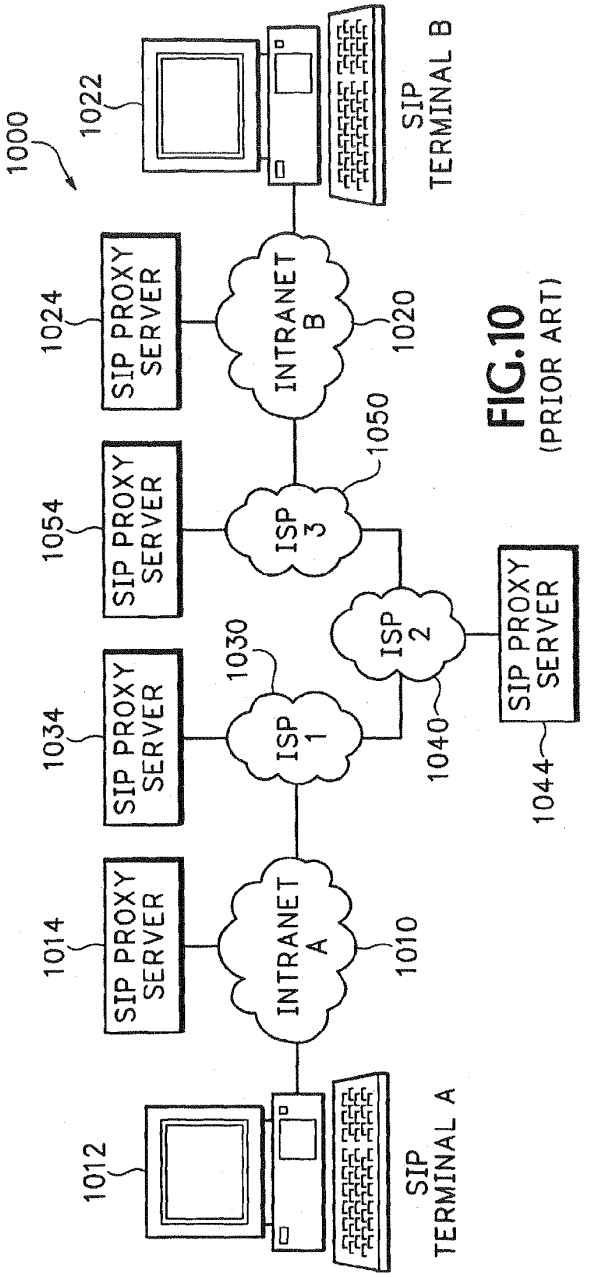

FIG.10
(PRIOR ART)

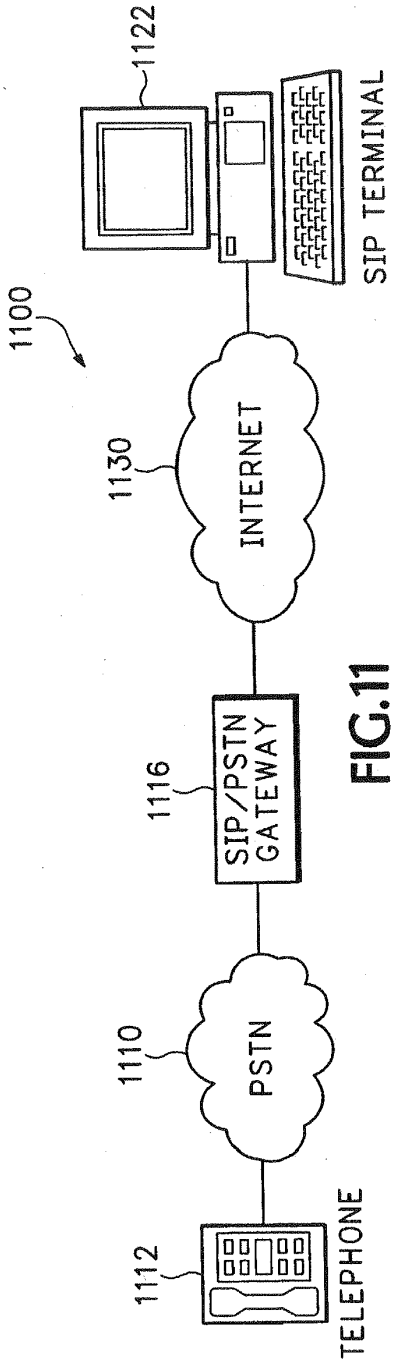

FIG.11
(PRIOR ART)

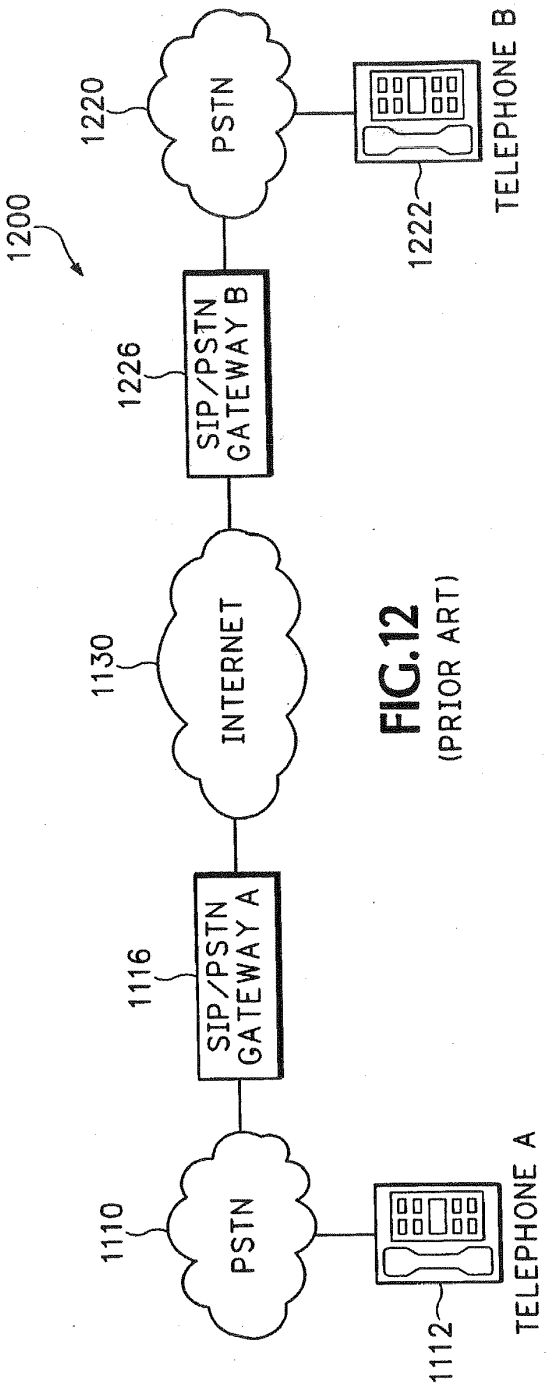

FIG.12
(PRIOR ART)

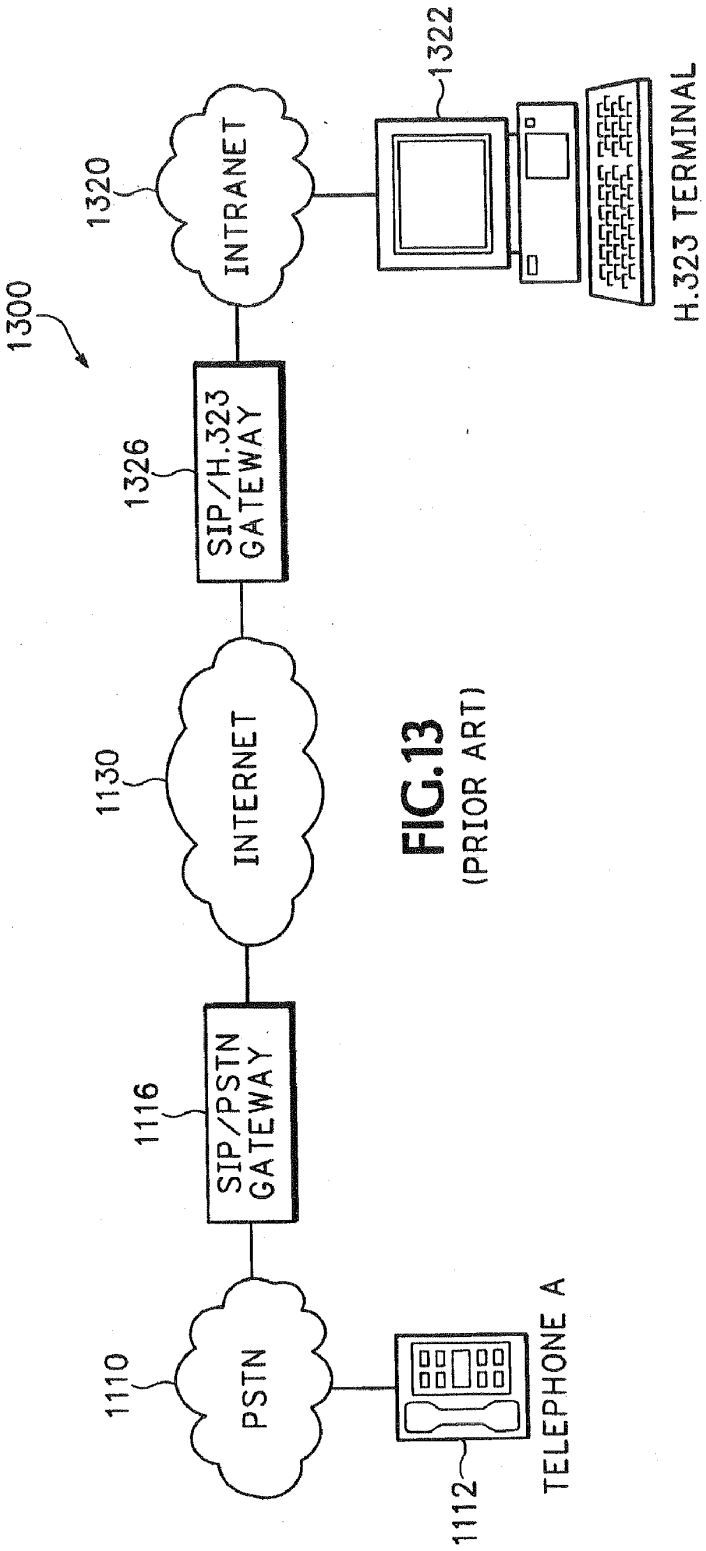

FIG.13
(PRIOR ART)

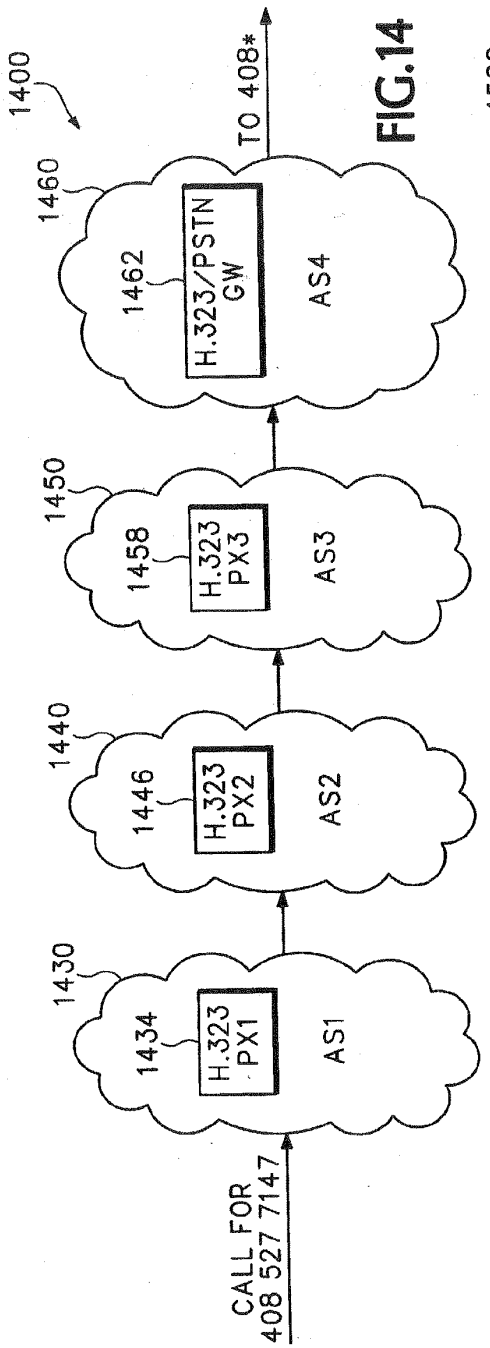
1400
1460
1462
H.323/PSTN GW
AS4
TO 408*
1450
1458
H.323 PX3
AS3
1440
1446
H.323 PX2
AS2
1430
1434
H.323 PX1
AS1
CALL FOR 408 527 7147

FIG.14

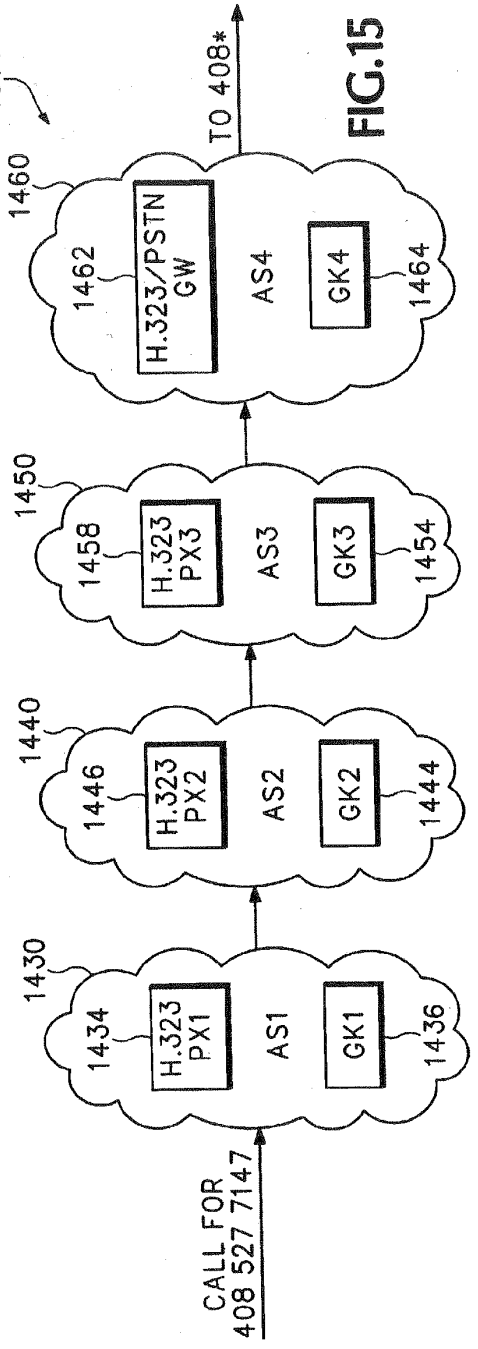
1500
1460
1462
H.323/PSTN GW
AS4
GK4
1464
TO 408*
1450
1458
H.323 PX3
AS3
GK3
1454
1440
1446
H.323 PX2
AS2
GK2
1444
1430
1434
H.323 PX1
AS1
GK1
1436
CALL FOR 408 527 7147

FIG.15

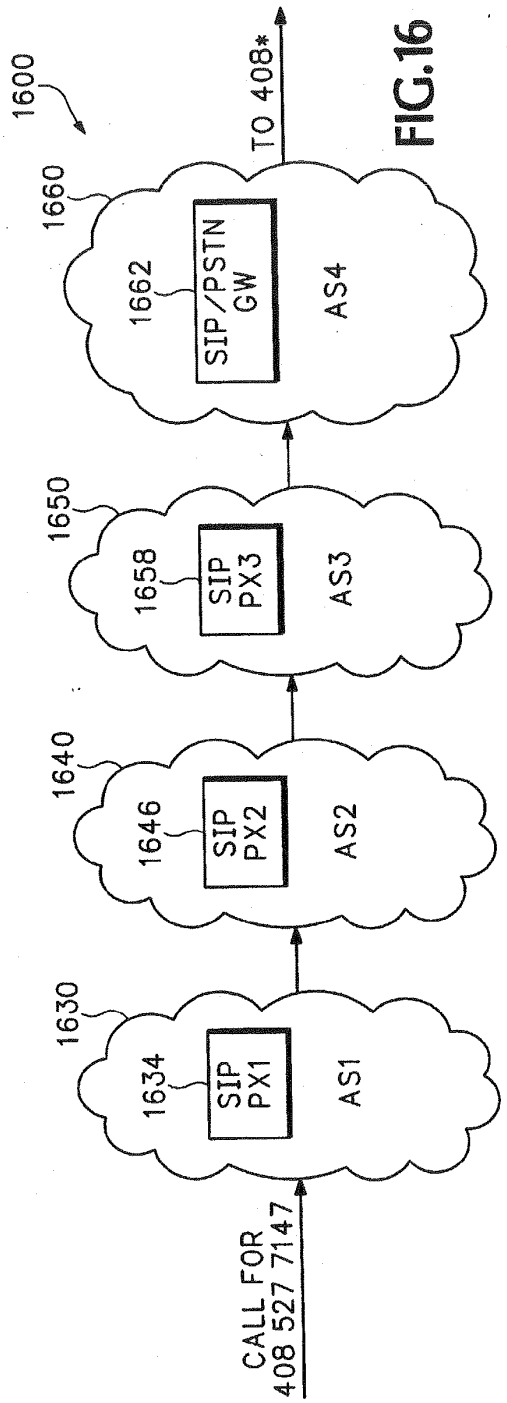
1600
1660
1662
SIP/PSTN GW
AS4
TO 408*
1650
1658
SIP PX3
AS3
1640
1646
SIP PX2
AS2
1630
1634
SIP PX1
AS1
CALL FOR 408 527 7147

FIG.16

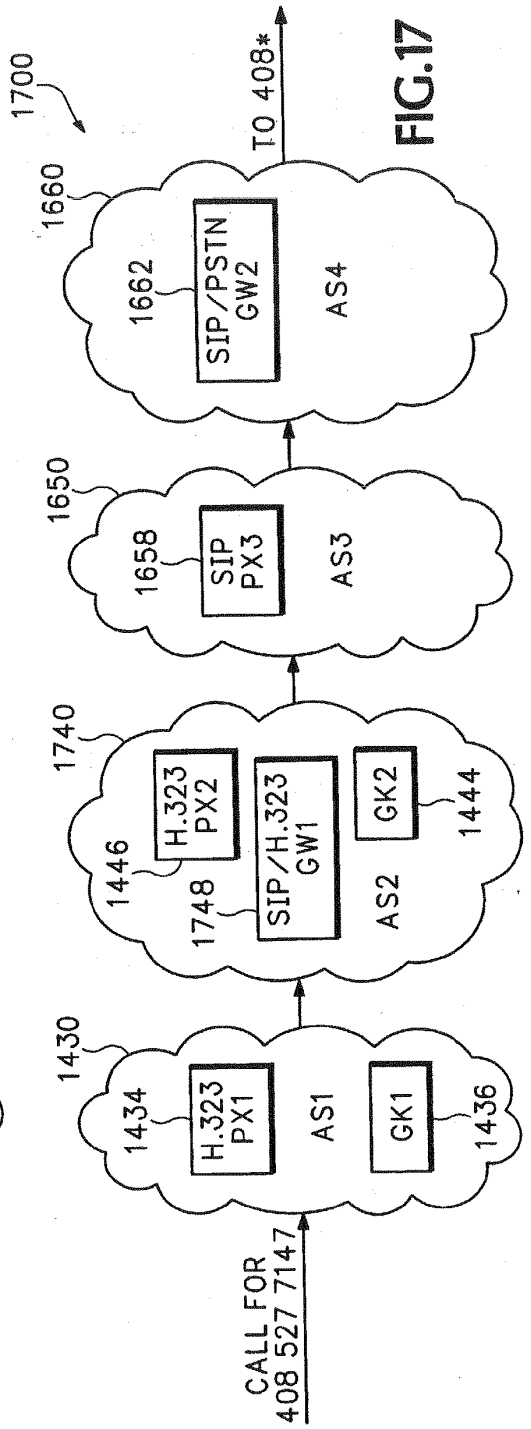
1700
1660
1662
SIP/PSTN GW2
AS4
TO 408*
1650
1658
SIP PX3
AS3
1740
1446
H.323 PX2
1748
SIP/H.323 GW1
AS2
GK2
1444
1430
1434
H.323 PX1
AS1
GK1
1436
CALL FOR 408 527 7147

FIG.17

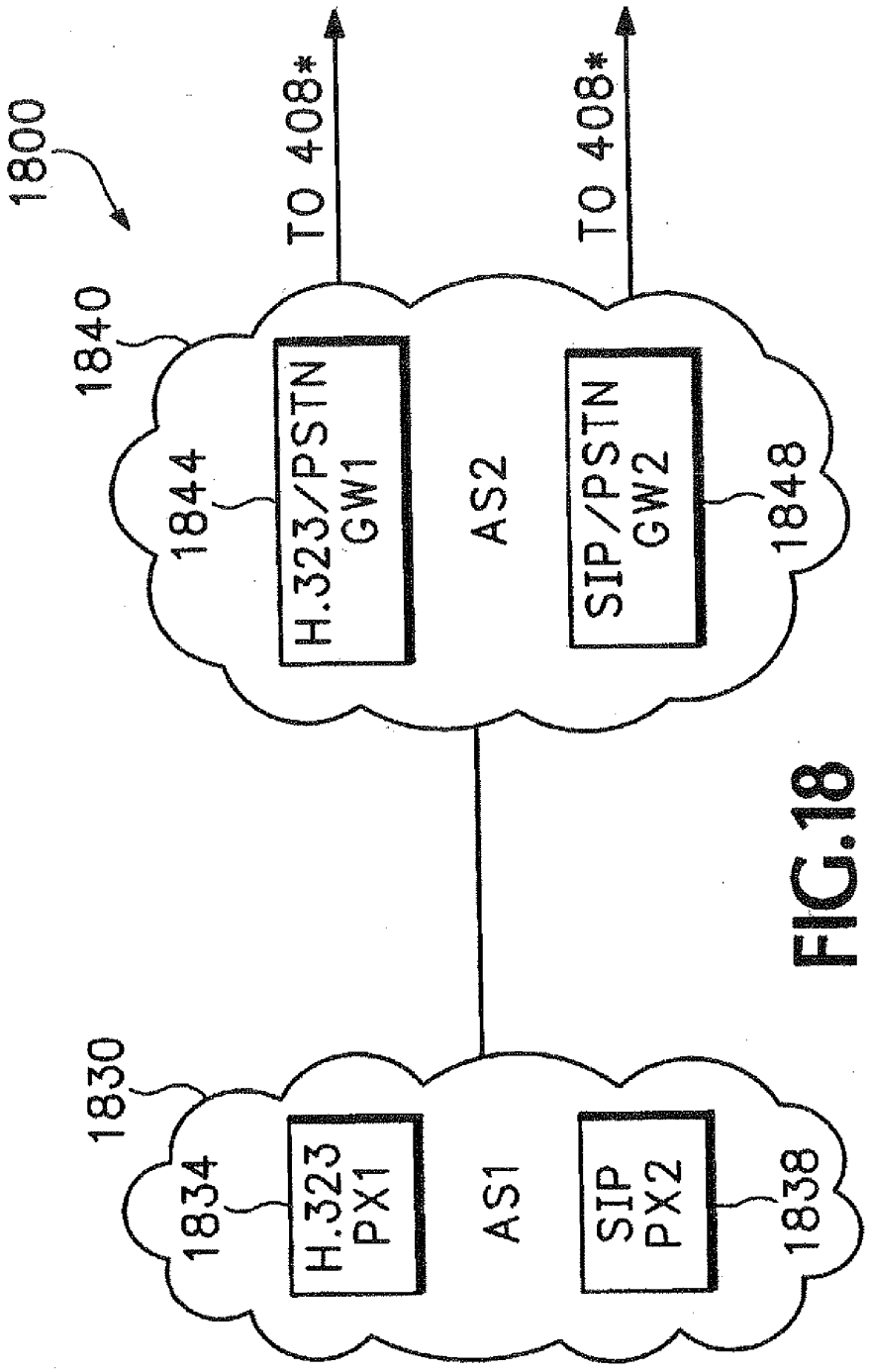
1800
TO 408*
TO 408*
1840
1844
H.323/PSTN GW1
AS2
SIP/PSTN GW2
1848
1830
1834
H.323 PX1
AS1
SIP PX2
1838

FIG.18

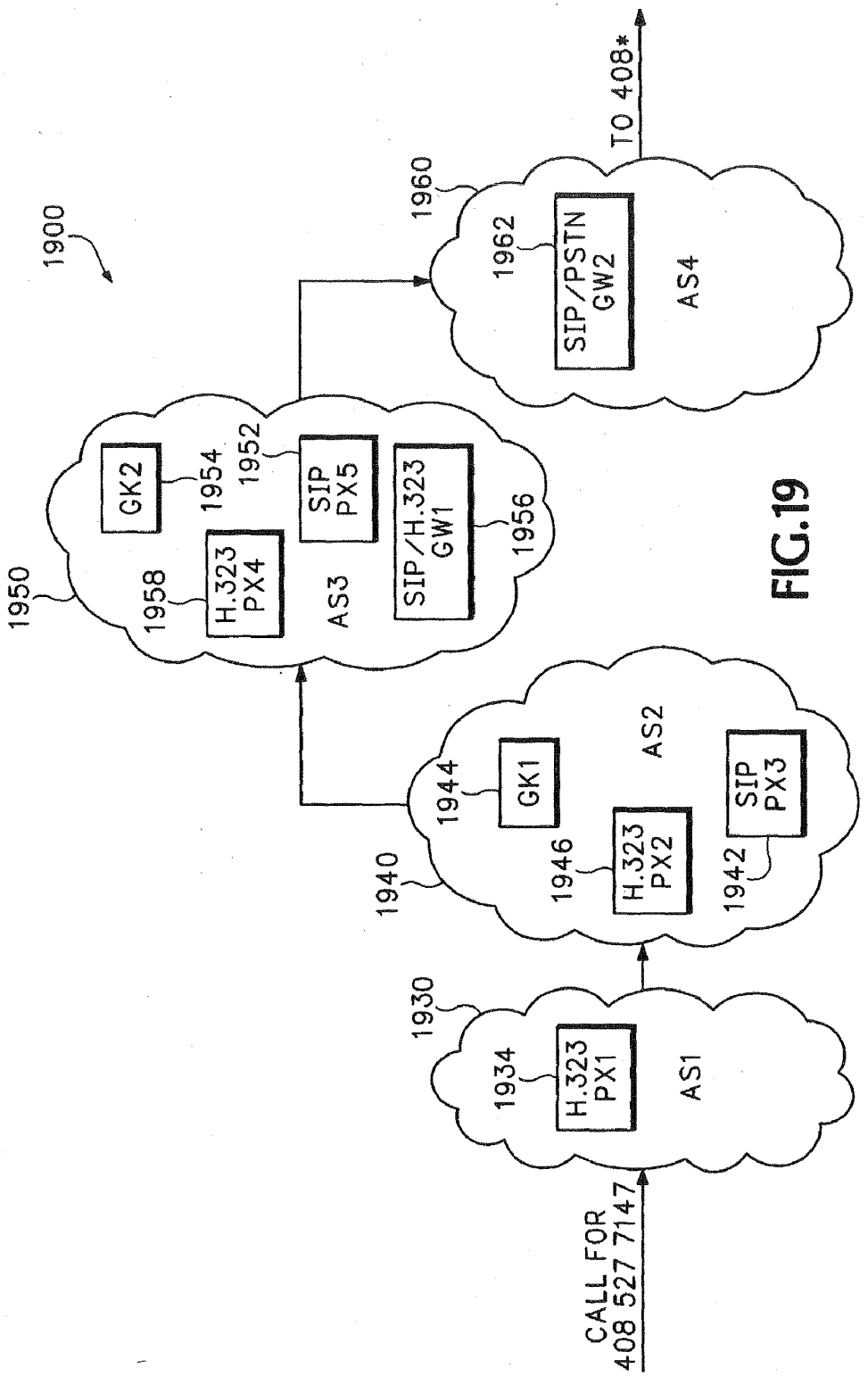
1900
CALL FOR
408 527 7147
1930
1934
H.323
PX1
AS1
1940
1944
GK1
1946
H.323
PX2
AS2
1942
SIP
PX3
1950
1958
H.323
PX4
1954
GK2
1952
SIP
PX5
AS3
SIP/H.323
GW1
1956
1960
1962
SIP/PSTN
GW2
AS4
TO 408*

FIG.19

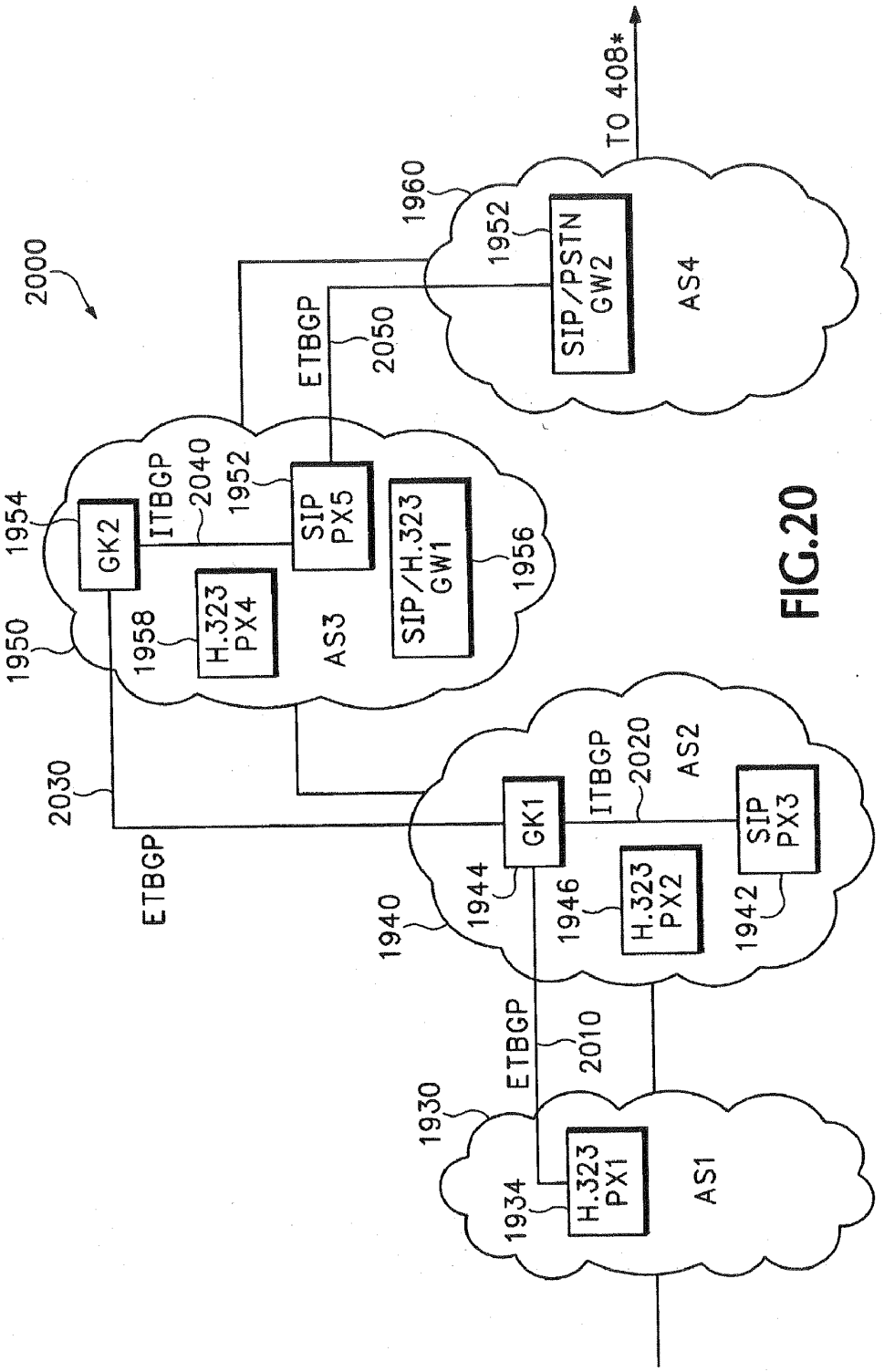
2000
1954
GK2
ITBGP
2040
1952
SIP PX5
1950
1958
H.323 PX4
AS3
SIP/H.323 GW1
1956
ETBGP
2050
1960
1952
SIP/PSTN GW2
AS4
TO 408*
2030
ETBGP
1940
1944
GK1
ITBGP
2020
AS2
1946
H.323 PX2
SIP PX3
1942
ETBGP
2010
1930
1934
H.323 PX1
AS1

FIG.20

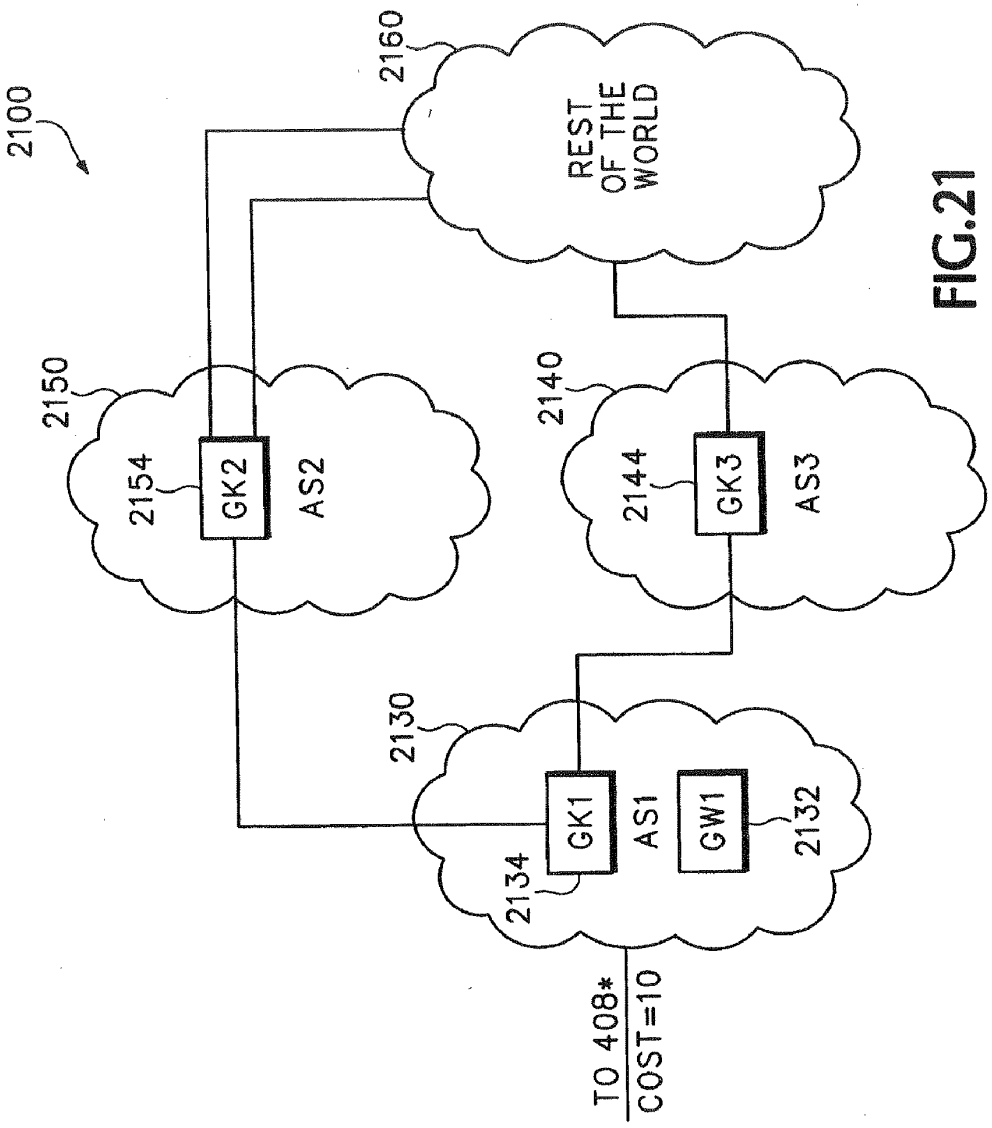
2100
2150
2154
GK2
AS2
2160
REST OF THE WORLD
2140
2144
GK3
AS3
2130
2134
GK1
AS1
GW1
2132
TO 408*
COST=10

FIG.21

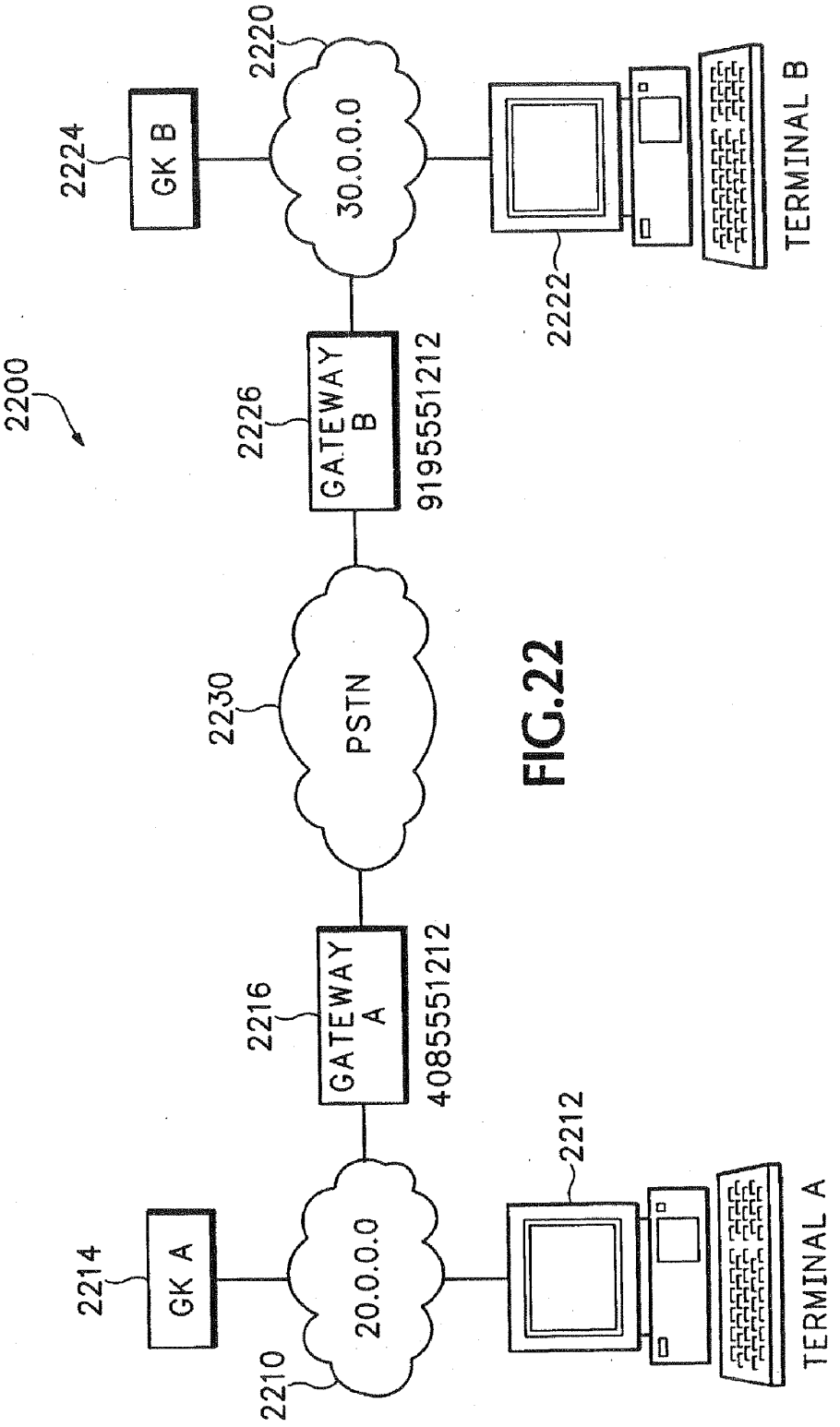
2200
2214
GK A
2210
20.0.0.0
2212
TERMINAL A
2216
GATEWAY A
4085551212
2230
PSTN
2226
GATEWAY B
9195551212
2222
TERMINAL B
2224
GK B
2220
30.0.0.0

FIG.22

METHOD AND APPARATUS FOR AUTOMATIC INTER-DOMAIN ROUTING OF CALLS

[0001] This application is a continuation of prior U.S. application Ser. No. 10/426,459, filed Apr. 29, 2003, which is a continuation of U.S. application Ser. No. 09/225,921, filed Jan. 5, 1999, which claims priority from U.S. Provisional Application Ser. No. 60/097,866, filed Aug. 25, 1998.

FIELD OF THE INVENTION

[0002] The present invention relates generally to call routing and, more particularly, to automatic routing between domains.

BACKGROUND OF THE INVENTION

[0003] Internet Telephony allows telephone calls to be carried over an Internet protocol (IP) network either end-to-end between two telephones or computers, or as one or more "hops" in an end-to-end telephone call. A major objective in creating an internet telephony system is to reduce the cost of voice calls while maintaining the same quality level currently provided in voice networks. To achieve this objective a voice call may have to be routed over multiple hops, with some of these hops being in the data network while others are in the voice network.

[0004] Internet telephony calls are created, managed, and torn down by signaling protocols. These signaling protocols, when combined with a method of routing the signaling messages and maintaining call state allow the actual media (i.e. voice) to flow in packets between the endpoints. The standards organizations are currently evolving two Internet Telephony signaling protocols: H.323 and SIP. A call routing scheme can be developed separately for each signaling protocol, but it is highly desirable to separate the routing function from other control functions of the Internet, as has been done for the routing of IP data packets.

[0005] The routing of telephone calls in the public switched telephone network (PSTN) is accomplished by a combination of common channel signaling (CCS), such as Signaling System #7 (SS7), a number of translation facilities in elements called Service Control Points (SCPs), and static routing tables in elements called Service Switching Points (SSPs). While the CCS routing architecture is a reasonable solution for the PSTN, this architecture has a number of serious limitations, not the least of which is the use of static routing tables in the SSPs. It also suffers from poor separation of the name→address translation function (e.g. 800 number→destination port) from the configuration of the routing machinery of the PSTN.

[0006] Initial deployments of Internet telephony have been designed to be similar to the PSTN and use static routing tables in network endpoints, gateways, or centralized call control elements called gatekeepers. An example of a simplified internet telephony system architecture **100** is shown in FIG. **1**.

[0007] In architecture **100**, terminal **12** is connected to intranet **10** which has a gatekeeper **14** which acts as a routing agent for intranet **10**. Terminal **22** is connected to intranet **20** which has a gatekeeper **24** which acts as a routing agent for intranet **20**. Intranets **10** and **20** are each connected to Internet **30**.

[0008] In the configuration **100** of FIG. **1**, a call is routed from terminal **12** to terminal **14** using the routing tables in gatekeepers **14** and **24**. One problem with the conventional internet telephony system **100** has no distributed routing protocol to ease the maintenance and distribution of routing information among the elements of the system.

[0009] As mentioned above, two Internet Telephony protocols are presently evolving within the standards organizations: H.323 and SIP. The two protocols are discussed in the next two sections with emphasis on how they achieve multi-hop call routing. Then we describe how to achieve distributed multi-hop call routing. We also discuss the addressing formats used in Border Gateway Protocol (BGP) which is used for routing of IP data packets in the backbone of the Internet.

The H.323 Architecture

[0010] Recommendation H.323 is a standard architecture for multimedia conferencing (voice, video, and, data) in packet-based networks that was designed by the ITU-T. H.323 has been successfully applied as a suite of signaling protocols for Internet Telephony.

[0011] The main components involved in H.323 conferencing are:

- **[0012]** Terminals: an H.323 terminal is an endpoint capable of generating audio, video, and data streams or any combination thereof.
- **[0013]** Gatekeepers: a gatekeeper is an H.323 entity that provides address resolution and controls access for all types of H.323 endpoints. In addition, a gatekeeper may perform other services such as accounting and authentication.
- **[0014]** Multipoint Control Units (MCU): an MCU is an H.323 endpoint which provides the capability for three or more terminals to participate in a multipoint conference.
- **[0015]** Gateways: an H.323 gateway is an endpoint that translates from/to H.323 to/from another multimedia conferencing protocols such as H.320 (conferencing on ISDN), or SIP. The gateways with the most relevance to Internet telephony are the voice gateways which are H.323/PSTN gateways and which carry voice only.
- **[0016]** Proxies: While not part of the H.323 standard, Cisco provides for an H.323 proxy. It behaves like an H.323/H.323 gateway. Useful features of the proxy include quality of service (QoS), Security, and Application Specific Routing (ASR). ASR involves forcing multimedia streams to follow specific routes path towards the destination).

The main signaling protocols required to implement the H.323 architecture are:

- **[0017]** RAS: Registration, Admission, and Status. It is a UDP-based protocol used for communication between H.323 endpoints and the gatekeeper and also for inter-gatekeeper communication. It is part of the H.225 recommendation.
- **[0018]** Q.931: is the signaling protocol used for connection establishment between two endpoints. It is part of the H.225 recommendation.
- **[0019]** H.245: is the signaling protocol responsible for call control between endpoints. It provides for capability exchange, channel and coder/decoder (codec) negotiation, and several other functions.
- **[0020]** RTP: is the protocol used for carrying the real-time media streams over IP networks.

[0021] T.120: is the architecture used for sharing data between endpoints participating in a conference.

[0022] A gatekeeper administers one or more H.323 zones. Calls between endpoints in the same zone typically consist of a single hop. On the other hand, inter-zone calls will usually consist of multiple hops (called legs). Some examples will be described below which illustrate the operation of H.323 and the problems involved with multi-hop calls.

[0023] FIG. **2** illustrates an example 200 of H.323 call set-up. In FIG. **2**, a call is established directly between the terminals **12** and **22** and therefore consists of only one hop.

[0024] However, the H.323 recommendation also defines a signaling model for gatekeeper routed calls. In the gatekeeper model, the Q.931 and H.245 signaling may flow through a gatekeeper while the RTP media streams still flow directly between the terminals, as in FIG. **2**. In this case, the signaling part of the call consists of two call legs: one call leg from terminal **12** to gatekeeper **14**; and one call leg from gatekeeper **14** to terminal **22**.

[0025] Routing calls to H.323 terminals, or other entities, outside the caller's local area system requires multi-hop routing. Several solutions have been proposed which involve: manual configuration of gatekeepers; inter-gatekeeper communication; and the use of directory servers. Most of these solutions consider only calls consisting of one call leg, and none of them scale well to large networks nor provide for dynamic update of call routes over time.

[0026] An Internet Service Provider (ISP) may also wish to enforce certain Quality of Service (QoS) and security policies on H.323 calls. To achieve this, the call may be directed through proxies **16** and **26**, as shown in the architecture **300** of FIG. **3**.

[0027] This call setup works as follows:

[0028] Terminal **12** requests admission from its gatekeeper **14**, to call Terminal **22**. Admission typically includes at least: authorizing of the call, resolution of the destination address; and accounting for the call.

[0029] Gatekeeper **14** directs Terminal **12** to connect to Proxy **16**.

[0030] Terminal **12** connects to Proxy **16**.

[0031] Proxy **16** receives the call and queries Gatekeeper **14** on how to forward the call.

[0032] Gatekeeper **14** instructs Proxy **16** to connect to Proxy **26**.

[0033] Proxy **16** connects to Proxy **26**.

[0034] Proxy **26** receives the call and queries Gatekeeper **24** on how to forward the call.

[0035] Gatekeeper **24** instructs Proxy **26** to connect to Terminal **22**.

[0036] Proxy **26** connects to Terminal **22**.

The Q.931 and H.245 signaling for the call, as well as the RTP streams, all pass through the proxies **16** and **26**. In the example of FIG. **3**, the call consists of three call legs (layer 7 hops). Cisco gatekeepers and proxies can implement a three-hop call, such as the one demonstrated in FIG. **3**, by isolating the source zone, i.e. intranet **10**, and the destination zone, i.e. intranet **20**, from the rest of the network **30**.

[0037] The situation can be further complicated by decomposing the Internet cloud **30** of FIG. **3** into multiple ISP networks as shown in FIG. **4**. In multiple ISP networks, each ISP can have different policies. Therefore each ISP places proxies at the border of its network and forces all incoming H.323 calls to go through these proxies in order to enforce its specific policies on the calls.

[0038] In the network architecture **400** of FIG. **4**, proxy **16** is coupled to ISP network **430** which includes gatekeeper **434**. ISP network **430** is connected through proxy **436** to ISP network **440**. ISP network **440** includes gatekeeper **444** and is connected to ISP **450** through proxy **446**. ISP network **450** includes gatekeeper **454** and is connected to proxy **26**.

[0039] In the example of FIG. **4**, a call from Terminal **12** to Terminal **22** will consist of five call legs. In conventional internet telephony technology, there is no mechanism available that can realize such a multi-hop (more than three hops) scenario. Once the call leaves the source zone by passing through proxy **16** to ISP network **430** and then on to ISP network **440**, the application layer addressing identifying terminal **22** is unavailable for routing. Neither inter-gatekeeper communication nor directory services are able to solve this application layer routing problem.

[0040] Inter-gatekeeper communication and directory services can only resolve a layer 7 destination address into a layer 3 address of a gateway to the layer 7 domain (e.g. the PSTN). Therefore, the layer 7 address, which is the actual desired destination, becomes irrelevant to the IP network routing which takes place. For instance, a layer 7 directory may have multiple entries for a given destination address, where each entry may include a gateway protocol type or gateway cost. However, directories are not dynamic enough to store current status information for the gateway represented by each entry.

[0041] For example, there may be two gateways, a primary and a secondary, available to reach the 408 area code through the internet. If the primary gateway is out of service, then 408 area code is still physically accessible. However, once the directory resolves the layer 7/PSTN destination address to the layer 3 address of the primary gateway, then the IP network routes only on the basis of the layer 3 address and not the layer 7 destination. All the IP network knows is that it can't reach the layer 3 address of the first gateway. Once the layer 3 address is obtained from the static directory table and the call is sent out into the multiple ISP network, the call will be dependent upon the availability of the layer 3 address.

[0042] Similarly, there can be multiple ISPs with gateways to a layer 7 domain, such as the PSTN, where some gateways are better than others. For example, a gateway to the 408* area code from an ISP in San Jose will likely be cheaper in terms of telephony costs than a gateway to the 408* area code from an ISP in Oakland, even though the Oakland ISP may require fewer IP hops and therefore be cheaper in terms of IP network costs.

[0043] Therefore, the need remains for an inter-domain application-layer routing protocol that handles multi-hop inter-ISP calls.

[0044] FIG. **5** shows an example of a call routed through a voice gateway **516**. In order for the H.323 terminal **522** to be able to call a telephone **512** on PSTN **510**, the gatekeeper **534** routes the call to the appropriate gateway **516** given the telephone number of the call. However, there are likely to multiple gateways to the PSTN **510** through which the call could route. The PSTN access costs, i.e. phone charges, are likely to be lower through some gateways than others. However, the call from the H.323 terminal **522** to gateway **516** will be routed by the internet **530** based upon the lowest internet cost, irrespective of the telephony costs involved in using a particular gateway.

[0045] A static routing table of the conventional art can be modified to reflect the PSTN access costs of the various

available gateways and choose the one with the lowest cost. Then the internet **530** will route to that gateway using BGP based upon the least number of hops. However, the static routing table solution is unable to cope with a failure of gateway **516** when other gateways to the same destination phone number are still available. The system will then drop the call when it is unable to reach gateway **516**. In addition, the static routing table will also typically require a high degree of manual configuration to set up and maintain the available routes in a large network.

[0046] In contrast, the present invention is able to route the call through the IP network to the appropriate gateway according to an aggregate cost function of both the layer 7 gateway cost and the IP network costs. Some possible cost functions are: minimize the total number of hops, minimize the distance traversed in the layer 7/PSTN domain, minimize the distance traversed in the IP data network, or minimize the monetary cost of the call. To make the appropriate call routing decision, each gatekeeper also needs sufficient status information about the reachability of E.64 prefixes in the PSTN. The PSTN call leg, between the gateway and the telephone, is treated no differently from the call legs within the data network.

[0047] Therefore, the need remains for a routing system which is self-configuring, routes based upon an aggregate cost of the call, and which maintains current status information regarding each route to the destination.

[0048] Typically, the only addressing format PSTN telephones understand is E.164 numbers. Therefore, in order for the PSTN telephone **512** to be able to call the H.323 terminal **522** through the voice gateway, the H.323 terminal **522** must have an E.164 number assigned to it. And the gateway **516**, or the gatekeeper **534**, must be able to route the call to the H.323 terminal **522** through the IP network **530** based on the H.323 terminal's E.164 number.

[0049] FIG. **6** shows how a call can be established from a PSTN telephone **512**, through voice gateway **516**, onto the IP network **630**, then through another voice gateway **626**, back to PSTN **620** and eventually to the called telephone **622**. Here once the call hops onto the IP network **630**, the gateway **516**, or the gatekeeper **634**, must decide which hop off gateway to route the call to. This decision is made based on the called E.164 number. Note that Cisco's voice gateways can be configured to operate without gatekeepers, and in this case will have to make the call routing decisions on their own. Remember also that the IP cloud **630** of FIG. **6** can be decomposed into multiple ISP networks similar to those in FIG. **4**, and therefore the call leg across the IP network **630** may actually consist of multiple hops.

[0050] FIG. **7** shows a voice call between two H.323 terminals through PSTN **730**. The problem here is to provide gatekeeper **714**, or gateway **716**, of the calling terminal's IP network **710** with call routing information about the called IP network **720**. This is possible if the two IP networks **710** and **720** are connected because they are both part of the overall Internet. As far as the IP network as a whole is concerned, the PSTN cloud **730** will be represented as just a link between two IP nodes, e.g. gateways **716** and **726**. FIG. **8** shows a similar topology to FIG. **7**, wherein one of the H.323 terminals **722** is replaced with a LAN PBX **828** and telephone **822**.

The SIP Architecture

[0051] The Session Initiation Protocol (SIP) is an Internet Conferencing Protocol being developed in the IETF. SIP is a signaling protocol for establishing connections between endpoints participating in a conference call. The endpoints advertise their capabilities and media channel information to other nodes in the network using the Session Description Protocol (SDP) format. These capabilities are included in the SIP connection establishment messages. RTP is used for carrying the actual media streams.

The main components involved in SIP conferencing are:

[0052] Terminal: a SIP entity capable of creating media streams and of participating in SIP conferences.

[0053] Proxy Server: receives SIP requests from a client and creates the corresponding requests for the next call leg of a SIP call.

[0054] Redirect Server: receives SIP requests from a client and responds with addressing information about where the call should be forwarded.

[0055] Gateway: for example, a gateway from SIP to PSTN, from SIP to H.323.

EXAMPLE TOPOLOGIES

[0056] FIG. **9** shows an example of a simple SIP call through an architecture **900** which includes proxy server **934**. The caller, Terminal **912**, sends a SIP request to the proxy server **934**. The proxy server **934** forwards the request to the called, Terminal **922**. Similarly, a SIP response from Terminal **922** goes through the proxy server **934**. However, the media streams flow directly between the two endpoints **912** and **922** through Internet **930**.

[0057] FIG. **10** illustrates another example of a SIP call in an architecture **1000** wherein Internet **930** is composed of multiple ISP networks **1030**, **1040** and **1050**. In FIG. **10**, the signaling between the two SIP terminals **1012** and **1022** flows through multiple proxy servers **1014**, **1034**, **1044**, **1054** and **1024**, thus segmenting the call into multiple call legs. The SIP specification does not describe how to achieve such a multi-hop scenario. The need remains for a call-routing protocol for routing SIP calls through multiple call legs.

[0058] FIG. **11** shows an example of a voice call in an architecture **1100** which includes an SIP/PSTN gateway **1116**. The call originates from a PSTN telephone **1112** in PSTN **1110**, connects to SIP/PSTN voice gateway **1116** which routes the call through Internet **1130** to a SIP terminal **1122**. The same call routing issues apply to this scenario as were discussed above with regard to FIG. **5** for calls between a PSTN telephone and an H.323 terminal.

[0059] FIG. **12** shows an example of a toll bypass call in an architecture **1200** involving two voice gateways **1116** and **1226**. The call between two PSTN telephones **1112** and **1222** hops of PSTN **1110** onto the IP network **1130** through gateway **1116** and back onto the PSTN **1220** through gateway **1226**. The PSTNs **1110** and **1220** are different parts of the overall PSTN, but the call has bypassed long-distance toll charges by passing from one local zone **1110** of the PSTN through the IP network **1130** to another local zone **1220** of the PSTN. In this case SIP is the protocol used to carry the call through the IP network **1130**.

[0060] FIG. **13** shows another scenario where translation from SIP to H.323 is needed. The architecture **1300** of FIG. **13** includes an SIP/H.323 gateway **1326** which can convert SIP protocol calls received from gateway **1116** over IP network **1130** into H.323 protocol calls which are routed over intranet **1320** to H.323 terminal **1322**. SIP/H.323 gateway also converts H.323 calls received over intranet **1320** into SIP for transmission over internet **1130** to gateway **1116**. The need

remains for a mechanism to keep track of which signaling protocol should be used on a particular segment of the IP networks.

Phases of an IP Telephony Call

[0061] An IP Telephony call can be divided into the following phases:

[0062] 1. Address Resolution: given partial information about the destination of the call, use directory services to obtain complete information about the destination.

[0063] 2. Call Method: select which application is appropriate to connect to the call destination, e.g. H.323 or SIP.

[0064] 3. Route Selection: find the best path for routing the call towards its destination.

[0065] 4. Call Signaling: for connection establishment and capability negotiation between the caller and the called.

[0066] 5. Media Streams: The actual flow of audio, video, and data, or any combination thereof between the caller and the called.

[0067] Note the difference between addressing for IP routing and call routing. IP routing is a network layer/layer 3 function. Call routing, on the other hand is an application layer/layer 7 function. In call routing, a single application level hop may consist of multiple IP level hops.

[0068] Accordingly, a need remains for an improved call routing method in internet telephony systems.

SUMMARY OF THE INVENTION

[0069] An embodiment of a routing node, according to the present invention, configured to be connected to a network, is composed of a memory configured to store a routing table and a call routing processor configured to receive a routing update message from other routing nodes of the network. The routing update message includes (a network address for an adjacent entity in the network, a range of addresses which the adjacent entity can access, and a cost value for access to the range of addresses through the adjacent entity). Responsive to receiving the routing update message, the call routing processor is configured to insert an entry in the routing table of the memory that associates (the network address for an adjacent entity in the network, the range of addresses which the adjacent entity can access, and the cost value for access to the range of application addresses through the adjacent entity). The call routing processor then modifies the routing update message such that the modified routing update message includes (a network address for the routing node, the range of addresses which the adjacent entity can access, and an incremented cost value obtained by incrementing the cost value received in the routing update message). Then, the call routing processor forwards the modified routing update message to all adjacent entities.

[0070] In another embodiment of the present invention, the call routing processor is further configured to receive a call having a destination address. Responsive to receiving the call, the call routing processor is configured to search its routing table for entries where the destination address of the call matches (the range of addresses which the adjacent entity can access), select one of the entries having the lowest cost value, and route the call to (the network address for an adjacent entity in the network) of the selected entry.

[0071] The foregoing and other objects, features and advantages of the invention will become more readily apparent from the following detailed description of a preferred embodiment of the invention which proceeds with reference to the accompanying drawings.

BRIEF DESCRIPTION OF THE DRAWINGS

[0072] FIG. **1** is a functional block diagram illustrating an example of an Internet Telephony call in a simplified conventional network architecture.

[0073] FIG. **2** illustrates an example of H.323 call set-up in the network of FIG. **1**.

[0074] FIG. **3** is a functional block diagram illustrating an example of an Internet Telephony call in another embodiment of a conventional network architecture which includes proxies which isolate the intranets of FIG. **1** from the IP network.

[0075] FIG. **4** is a functional block diagram illustrating an example of an Internet Telephony call in another embodiment of a conventional network architecture wherein the IP network includes multiple ISPs.

[0076] FIG. **5** is a functional block diagram illustrating an example of an Internet Telephony call from a PSTN terminal through a voice gateway.

[0077] FIG. **6** is a functional block diagram illustrating an example of an Internet Telephony call from a PSTN terminal through a voice gateway from the PSTN to the IP network, through another voice gateway from the IP network to the PSTN and terminating on another PSTN terminal.

[0078] FIG. **7** is a functional block diagram illustrating an example of an Internet Telephony call from an IP network terminal through a voice gateway from the IP network to the PSTN, through another voice gateway from the PSTN to the IP network and terminating on another IP network terminal.

[0079] FIG. **8** is a functional block diagram illustrating an example of an Internet Telephony call from an IP network terminal through a voice gateway from the IP network to the PSTN, through another voice gateway from the PSTN to the IP network and terminating on a LAN/PBX which serves a telephone terminal.

[0080] FIG. **9** is a functional block diagram illustrating an example of an Internet Telephony call from an SIP terminal through the IP network to another SIP terminal wherein a SIP proxy server controls routing of the call.

[0081] FIG. **10** is a functional block diagram illustrating an example of an Internet Telephony call from an SIP terminal through an IP network composed of multiple ISPs to another SIP terminal wherein a series of SIP proxy servers control routing of the call.

[0082] FIG. **11** is a functional block diagram illustrating an example of an Internet Telephony call from a PSTN terminal through an SIP/PSTN gateway to the IP network to an SIP terminal.

[0083] FIG. **12** is a functional block diagram illustrating an example of an Internet Telephony call from a PSTN terminal through an SIP/PSTN gateway to the IP network to another SIP/PSTN gateway to a PSTN terminal.

[0084] FIG. **13** is a functional block diagram illustrating an example of an Internet Telephony call from a PSTN terminal through an SIP/PSTN gateway to the IP network to an SIP/H.323 gateway onto an intranet and to a H.323 terminal.

[0085] FIG. **14** is a functional block diagram illustrating an example of routing according to the present invention, in a network having H.323 proxies and an H.323/PSTN gateway.

[0086] FIG. **15** is functional block diagram illustrating a network topology where gatekeepers are added to the network topology of FIG. **14**.

[0087] FIG. **16** is a functional block diagram illustrating an example of routing according to the present invention, in a network having SIP proxies and an SIP/PSTN gateway.

[0088] FIG. **17** is functional block diagram illustrating a network topology where gatekeepers are added to the network topology of FIG. **16**.

[0089] FIG. **18** is a functional block diagram illustrating an example of route advertising according to the present invention, in a network having both an H.323/PSTN gateway and an SIP/PSTN gateway.

[0090] FIG. **19** is a functional block diagram illustrating an example of routing of an Internet Telephony call, in an embodiment of a network according to the present invention, through multiple ISPs to an SIP/PSTN gateway.

[0091] FIG. **20** is a functional block diagram illustrating part of the signaling for the example of FIG. **19**.

[0092] FIG. **21** illustrates a network topology for demonstrating examples of call routing according to the present invention.

[0093] FIG. **22** illustrates an example of a voice call with a PSTN hop sandwiched between two IP hops.

DETAILED DESCRIPTION OF THE INVENTION

[0094] The present invention is directed to the Call Route phase of an IP telephony call discussed above. Given a valid IP telephony destination address, the present invention is directed towards a mechanism for selecting the best path towards the destination address. The destination address may be a PSTN phone, an IP phone, or any other voice terminal, e.g. an ISDN phone. An embodiment of the call-routing protocol according to the present invention includes the following properties:

[0095] Advertises the accessibility of IP telephony addresses and the costs associated with access to the destinations available through each route.

[0096] Selects the best route towards a particular IP telephony destination based upon the costs associated with the alternative routes. Only the selected route is further advertised.

[0097] Works well within a single service provider network, as well as for inter-service provider call routing.

[0098] Is independent of any specific Internet Telephony signaling protocol (H.323, SIP, . . . , etc).

[0099] The Border Gateway Protocol (BGP) is the mechanism by which conventional IP networks perform data routing. BGP provides a reliable mechanism for exchanging IPv4 routing information between autonomous systems (ASs) on the backbone of the Internet. The multi-protocol extensions of BGP enable BGP to carry routing information using addressing formats other than IPv4, e.g. E.164 numbers. In addition, BGP permits vendors to define vendor-specific attributes. The present invention makes use of the extensions to BGP for the purposes of call routing.

BGP Overview

[0100] BGP is an inter-domain routing protocol for backbone IP networks that make up the larger Internet. The following is a list of some of BGP's important features:

[0101] BGP speakers do not discover each other. The network administrator for each ISP has to manually configure a neighborhood relationship between two routers before they can exchange BGP updates.

[0102] If two BGP neighbors belong to two different ASes, such as different ISPs, then the protocol running between them is Exterior BGP or EBGP. EBGP is a full-fledged routing protocol. EBGP neighbors must be adjacent to each other, otherwise a tunnel has to be configured between the two neighbors.

[0103] If two BGP neighbors are in the same ASes, then the protocol running between them is Interior BGP or IBGP. IBGP is not a complete routing protocol, it is there only to tunnel BGP information from one border router, across the AS, to a border router on the other side of the AS. For IBGP to work as a full-fledged interior routing protocol, a full mesh neighborhood relationship has to be configured between all BGP speakers inside the autonomous system.

[0104] For BGP, the path from one AS to another AS represents a single hop. So the hop count along a path is the number of ASes traversed along that path. The BGP next hop is in the next AS towards the destination and not necessarily physically connected to the current router.

[0105] BGP promotes hierarchical address assignment. This simplifies route aggregation and hence results in significant reduction in the size of routing tables.

[0106] BGP uses multiple metrics to decide which routes to use and to propagate. The number of ASes traversed to reach the destination network is an important metric in that decision.

[0107] BGP provides mechanisms to guarantee loop-free advertisement of routes

[0108] Multiprotocol extension attributes are optional and nontransitive. This means that a BGP speaker who doesn't support the multiprotocol extensions will simply drop these attributes.

[0109] The present invention extends many of the properties of BGP to call routing of application layer or layer 7 addresses. Some of the properties of BGP are reliability, scalability, quick convergence, and the ability to do multi-hop call routing. In contrast, conventional Internet telephony call routing typically just selects the hop off gateway for the call.

IP Telephony Address Formats

[0110] IP telephony can potentially use a number of different methods for naming and addressing endpoints. One of these is the PSTN method of using E.164 numbers. Therefore, if IP telephony is to inter-operate with the PSTN, it has to support E.164 numbers. E.164 numbers are decimal numbers and they exhibit a nice hierarchy that may be very useful for aggregation. However, different aggregation methods than those currently used for aggregating binary IP addresses are required. The present invention uses a wildcard prefix method similar to address prefixes used for IP routing. Extensions to the present invention allow for other aggregation techniques, such as address ranges.

[0111] Another addressing format used in IP telephony is domain names, e.g. eos.ncsu.edu. These support some degree of aggregation along the domain hierarchy boundaries. The present invention supports this form of addressing as well.

[0112] Layer 3 IP addresses can also be used to identify IP telephony equipment. Aggregating binary IP addresses using Classless Inter-Domain Routing (CIDR) is relatively straightforward. For example, in classful addressing, IP addresses are divided into class A, class B, and class C. For class A the

prefix length is 8 bits, for class B it is 16 bits, and for class C it is 24 bits. You can't have a 21 bit prefix with classful addressing. With CIDR the prefix can be of any length <=32 bits (i.e. the size of the IP address).

[0113] It is important not to confuse the traditional use of IP addresses for network layer or layer 3 routing with the use of IP addresses for application layer/layer 7 routing in the present invention. We will call the layer 7 addresses used for call routing L7IP addresses. L7IP addresses have the same format as traditional layer 3 IP addresses, and the L7IP address of an endpoint will, most probably, have the same value as the layer 3 IP address of that endpoint. However, the L7IP address has a different meaning and is used in a different context than the layer 3 address.

[0114] The present invention supports all three formats mentioned above by utilizing BGP address families.

Using BGP for Call Routing

[0115] An embodiment of the present invention will be referred to as Telephony BGP. The multiprotocol extensions for BGP can be used to define attributes to carry routing information in different formats. E.164 numbers and L7IP (same as IPv4 addresses) addresses are among the defined formats. The multiprotocol extensions for BGP define the following fields for advertising a reachable route:

[0116] the address family identifier

[0117] network address of the next hop

[0118] a list of reachable prefixes via that next hop

Note that the IP network address of the next hop is a network layer/layer 3 address while the reachable PSTN/application prefixes are application layer/layer 7 addresses.

Next Hop

[0119] The entity at the next hop depends on what IP telephony protocol is being used and what mode this protocol is being used in. For example, one AS may wish to advertise an H.323 proxy (to be contacted using Q.931) as the next hop. Another AS may wish to advertise a gatekeeper (to be contacted using RAS) as the next hop. An AS that supports SIP may wish to specify a SIP proxy server as the next hop. In addition, an AS may wish to advertise the availability of multiple next hops. For example, if an AS includes an H.323 proxy and a SIP proxy, then the AS is capable of handling both types of applications.

[0120] In addition, it is also advantageous to advertise the next hop protocol in addition to the next hop network address as will become evident from the examples below. Possible choices for the next hop protocol include: SIP, Q.931, and RAS (other protocols may be appended to this list in the future, if Telephony BGP is to support other Internet telephony, conferencing, or streaming protocols, e.g., RTSP). RAS is included in this list even though it is not a call signaling protocol, because RAS messages can be routed multi-hop between gatekeepers and can be used to obtain information necessary for setting up multi-hop calls.

[0121] An embodiment of a simplified network topology **1400**, operating according to the present invention, is shown in FIG. **14**. In the topology **1400**, ASes **1430**, **1440**, **1450** and **1460** represent a portion of the larger Internet from which Internet Telephony calls can be received. AS **1430** includes an H.323 proxy (PX**1**) **1434** and is connected to AS **1440**. AS **1430** is further connected to the Internet from which it can receive H.323 protocol calls. AS **1440** includes an H.323 proxy (PX**2**) **1446** and is further connected to AS **1450**. AS **1450** includes an H.323 proxy (PX**3**) **1458** and is further connected to AS **1460**. AS **1460** includes an H.323/PSTN gateway (GW) **1462** which provides access to PSTN addresses with the prefix 408*.

[0122] In FIG. **14**, PX**1** **1434** receives an H.323 call for "4085277147". PX**1** **1434** speaks Telephony BGP and it has the following call routing entry in its call routing table:

Destination	List of (Next Hop Network Address, Next Hop Protocol)
E.164: 408*	{(address of PX2, Q.931)}

[0123] PX**1** **1434** establishes a call leg with PX**2** **1446** which has the following call routing entry for E.164 prefix "408*":

Destination	List of (Next Hop Network Address, Next Hop Protocol)
E.164: 408*	{(address of PX3, Q.931)}

[0124] Thus PX**2** connects the call to PX**3**. PX**3**'s call routing table entry for E.164 prefix "408*" is:

Destination	List of (Next Hop Network Address, Next Hop Protocol)
E.164: 408*	{(address of GW, Q.931)}

Therefore PX**3** **1458** connects to (GW **1462** which forwards the call to PSTN.

[0125] In FIG. **15**, the topology of FIG. **14** is expanded to form topology **1500** which includes gatekeepers (GKs). ASes **1430**, **1440**, **1450** and **1460** include gatekeepers **1436**, **1444**, **1454** and **1464**, respectively.

[0126] In topology **1500**, the gatekeepers speak TBGP, but the proxies and gateways do not. PX**1** **1434** is registered with GK**1** **1436**, PX**2** **1446** is registered with GK**2** **1444**, PX**3** **1458** is registered with GK**3** **1454**, and GW **1462** is registered with GK**4** **1464**. When a call to "4085277147" arrives at PX**1**, it queries its gatekeeper, GK**1**, where to forward the call next. GK**1** speaks Telephony BGP and has the following call routing entry:

Destination	List of (Next Hop Network Address, Next Hop Protocol)
E.164: 408*	{(address of GK2, RAS)}

[0127] GK**1** sends an RAS query to GK**2** asking where to next forward the call. GK**2**'s answer to GK**1** is to forward the call to PX**2**. Therefore, GK**1** instructs PX**1** to establish a call leg with PX**2**. When PX**2** receives the call the same procedure is repeated. In this case, GK**2** has the following call routing entry:

Destination	List of (Next Hop Network Address, Next Hop Protocol)
E.164: 408*	{(address of GK3, RAS)}

[0128] The next hop after PX**2** will be PX**3** and the following hop will be GW **1462** where the call hops off to the PSTN. The call routing entry at GK**3** is:

Destination	List of (Next Hop Network Address, Next Hop Protocol)
E.164: 408*	{(address of GK4, RAS)}

[0129] GK**4** is configured to forward all H.323 calls addressed to area code "408*" to GW **1462**. Alternatively GW **1462** can inform GK**4** that it is capable of reaching area code "408*" which will cause GK**4** to automatically configure the rest of the network using the TBGP of the present invention.

[0130] The example of FIG. **16** is similar to that of FIG. **14** except that PX**1** **1634** operates using SIP instead of the H.323 protocol of PX**1** **1434**. Therefore SIP replaces Q.931 in all the call routing entries and an SIP call received by PX**1** **1634** will route through topology **1600** in the same manner as the H.323 call received by PX**1** **1434** in FIG. **14**. For example, the call routing entry at PX**1** **1634** will be:

Destination	List of (Next Hop Network Address, Next Hop Protocol)
E.164: 408*	{(address of PX2, SIP)}

[0131] Topology **1700** in FIG. **17** combines some of the features of topologies **1500** and **1600** and therefore includes both H.323 and SIP protocol proxies along with gatekeepers. AS **1740** includes PX**2** **1446** which operates using H.323 and SIP/H.323 gateway **1748** which converts messages between H.323 and SIP formats.

[0132] In FIG. **17**, the call routing progresses the same as in the example of FIG. **15** until the call reaches PX**2** **1446**. PX**2** **1446** queries its gatekeeper GK**2** **1444** regarding where to next forward the call. GK**2** **1444** has the following routing entry:

Destination	List of (Next Hop Network Address, Next Hop Protocol)
E.164: 408*	{(address of PX3, SIP)}

[0133] Since the incoming call at PX**2** is an H.323 call and the only routes available utilize SIP proxies, the call must be translated to SIP before it can be forwarded to the next hop PX**3** SIP proxy **1658**. Therefore GK**2** instructs PX**2** to forward the call to the H.323/SIP gateway GW**1** **1748** for translation. Assuming that GW**1** is registered with GK**2** **1444** and that it is not a Telephony BGP speaker, GW**1** **1748** queries GK**2** **1444** where to next forward the call, and GK**2** instructs GW**1** to forward the call to PX**3** **1658**.

[0134] PX**3** **1658** receives the call which is now in SIP format. PX**3** speaks Telephony BGP and has the following call routing entry:

Destination	List of (Next Hop Network Address, Next Hop Protocol)
E.164: 408*	{(address of GW2, SIP)}

PX**3** **1658** establishes a call leg to GW**2** **1662** where the call hops off to the PSTN.

[0135] It is possible for there to be different destinations for a call within an AS based upon the protocol of the call. An AS having different next hops depending on which signaling protocol is being used can advertise this fact to the other ASes. In topology **1800** of FIG. **18**, AS**2** **1840** has both a SIP/PSTN gateway **1844** (GW**1**) and an H.323/PSTN gateway **1848** (GW**2**), both of which can reach the E.164 prefix "408*". A TBGP device in AS**2** will advertise the capability of GW**1** and GW**2** to its peers. AS**1** **1830** includes both H.323 proxy PX**1** **1834** and SIP proxy PX**2** **1838**. If either proxy PX**1** or PX**2** is a TBGP speaker, then it will receive an advertisement from the TBGP device in AS**2** **1840** and will, as a result, create a call routing entry of the form:

Destination	List of (Next Hop Network Address, Next Hop Protocol)
E.164: 408*	{ (address of GW1, Q.931), (address of GW2, SIP)}

[0136] As demonstrated above, the next hop attribute can be a list of several possible next hops.

[0137] Gateways, and even proxies, have limited resources and multiple gateways may be used to allow more concurrent calls towards the same set of destination addresses. For example, in FIG. **18**, GW**2** **1848** in AS**2** **1840** may be replaced by three gateways (e.g. GW**2**, GW**3** and GW**4**) that can all reach 408* destinations. Telephony BGP allows advertising of all three gateways to the other ASes. To achieve this, we replace the next hop network address in the TBGP peers in AS**1** **1830** with a list of next hop network addresses. With this change, the above call routing entry at will be:

Destination	List of (Next Hop Network Address, Next Hop Protocol)
E.164: 408*	{({address of GW1}, Q.931), ({address of GW2, address of GW3, address of GW4}, SIP)}

[0138] FIG. **19** illustrates another embodiment of a network topology **1900**, suitable for application of the present invention, that will be used to demonstrate a complex example of advertising of the next hop network address along with the next hop routing protocol.

[0139] In the topology **1900**, ASes **1930**, **1940**, **1950** and **1960** represent a portion of the larger Internet from which Internet Telephony calls can be received. AS **1930** includes an H.323 proxy (PX**1**) **1934** and is connected to AS **1940**. AS **1930** is further connected to the Internet from which it can receive H.323 protocol calls. AS **1940** includes an SIP proxy (PX**3**) **1942**, a gatekeeper (GK**1**) **1944**, and an H.323 proxy (PX**2**) **1946**. AS **1940** is further connected to AS **1950**. AS **1950** includes an SIP proxy (PX**5**) **1952**, a gatekeeper (GK**2**) **1954**, an SIP/H.323 gateway (GW**1**) **1956**, and an H.323 proxy (PX**4**) **1958**. AS **1950** is further connected to AS **1960**. AS **1960** includes an SIP/PSTN gateway (GW**2**) **1962** which provides access to PSTN addresses with the prefix 408*.

[0140] In the example shown in FIG. **19**, PX**1** receives an H.323 call to layer 7 address "4085277147". PX**1** (which works gatekeeperless) speaks Telephony BGP, and has the following call routing entries in its routing table:

Destination	List of (Next Hop Network Address, Next Hop Protocol)
E.164: 408*	{(address of PX2, Q.931), (address of PX3, SIP)}

[0141] PX**1** searches it routing table for a match on the layer 7 address, which falls within the E.164:408* prefix, and the protocol of the H.323 call, which is Q.931. PX**1** will find the call routing entry in the routing table which associates the E.164: 408* address with (address of PX**2**, Q.931). Note that the address of PX**2** is a network/layer 3 address.

[0142] Based upon the Q.931 call routing entry, PX**1** forwards the call to PX**2** and connects to PX**2** using Q.931. PX**2** is registered with the gatekeeper of AS**2**, GK**1**. GK**1** speaks Telephony BGP, which PX**2** does not. PX**2** notifies GK**1** that it has received a call for "4085277147" and queries GK**1** for the next hop to forward the call. GK**1** has the following call routing entries in its routing table:

Destination	List of (Next Hop Network Address, Next Hop Protocol)
E.164: 408*	{(address of GK2, RAS), (address of PX5, SIP)}

[0143] Since GK**1** speaks RAS but not SIP, it queries GK**2**, using RAS, on where to forward the call next. GK**2** has the following call routing entry:

Destination	List of (Next Hop Network Address, Next Hop Protocol)
E.164: 408*	{(address of GW2, SIP)}

[0144] Since the only possible next hop from AS**3** to AS**4** uses SIP, the call has to be translated from H.323 to SIP. GK**2** responds to GK**1**'s query asking it to forward the call to GW**1** (an H.323/SIP gateway). GK**1**, in turn, responds to PX**2**'s query asking it to forward the call to GW**1**. PX**2** then connects to GW**1**.

[0145] Note that GW**1** is registered with GK**2** in this scenario. GW**1** can be configured to register itself automatically using H.323 procedures. Alternatively, it is also possible to manually configure GK**2** with information regarding GW**1**.

[0146] Assume GW**1** speaks Telephony BGP. It has the same call routing entry as GK**2**. When GW**1** receives the H.323 call, it translates it into SIP and forwards it to GW**2**. GW**2** is configured to forward any calls for the prefix "408" out to the PSTN, and the call is routed to its final destination.

[0147] Note that GW**1** does not have to be a TBGP speaker. If, for example, GK**2** is a TBGP speaker and knows about the existence of GW**1**, then it will route the calls to it. It is also possible to advertise to adjacent ASes that GW**1** is the next hop and that it speaks Q.931, but the present invention can also advertise that GK**2** is the next hop and that it speaks RAS.

[0148] To accommodate the routing described in the above example, the present invention defines a new voice next hop attribute that has the format:

[0149] voice_next_hop List of (List of Next Hop Network Address, Next Hop Protocol)

[0150] Note that if AS**1** supports only H.323 and has no H.323/SIP gateways and its neighbor, AS**2**, supports only SIP and also has no H.323/SIP gateways, then calls will be unable to hop between AS**1** and AS**2**. The network topologies of the ISPs must be engineered to accommodate such hops.

Cost

[0151] BGP currently does not define an attribute for representing the cost associated with an advertised path. The attribute closest to a cost metric defined in BGP is the AS_path attribute that counts the number of AS hops on the path to the destination. AS_path is useful for route selection in Telephony BGP, but it only reflects the internet cost and therefore is not a sufficient representation of the cost associated with a voice call. Therefore, the present invention includes a cost attribute as follows:

[0152] voice_cost=Integer

[0153] Initially, each Telephony BGP gateway, such as gateway GW**2** **1962** in FIG. **19**, advertises its IP telephony route and assigns a non-negative integer value to voice_cost to that route which represents the cost associated with accessing the PSTN through the gateway. The voice_cost is an additive metric, so intermediate Telephony BGP routers will update voice_cost by adding the cost associated with their AS. Thus, voice_cost will represent both the PSTN and internet cost for access to a given layer 7 address through the route associated with the voice_cost. In practice, there can be scenarios where the cost of traversing an IP AS will be set to zero. However, it is hard to imagine scenarios where the cost associated with hopping from a gateway off to the PSTN will be set to zero.

[0154] Other cost metrics based on delay and bandwidth availability can be included in the present invention without departing from the spirit of the present invention.

Telephony BGP and Standard BGP

[0155] The present invention as embodied in Telephony BGP utilizes many of the functions of that exist in standard BGP. For example:

[0156] Telephony BGP uses the state machine defined in standard BGP that is used to create and maintain connections between neighboring entities.

[0157] Telephony BGP uses the same four messages already defined by BGP (OPEN, UDPDATE, KEEPALIVE, and NOTIFICATION).

[0158] Telephony BGP uses the same mechanisms used by standard BGP to ensure loop-free route advertisement.

[0159] However, at run time, Telephony BGP can be separated completely from standard BGP. It may run on a different TCP port than standard BGP. The purposes for separation are:

[0160] Separate the processing engine for BGP from that of Telephony BGP. If both standard BGP and Telephony BGP run on the same instance of the protocol then unexpected behaviors can occur when the processing engine receives a single Update message that includes both network layer/layer 3 advertisements and application layer/L7IP advertisements.

[0161] By running standard BGP and Telephony BGP on the same TCP port, the present invention would require all BGP speakers to be upgraded to support Telephony BGP. That's not practical. Note that a BGP speaker drops attributes which it does not understand.

[0162] Permit standard BGP and Telephony BGP to define the boundaries of their ASes differently.

Injecting Routes into Telephony BGP, the Telephony BGP API, and the Telephony BGP CLI

[0163] Routes can be injected into the call routing protocol of the present invention at any Telephony BGP speaker/routing agent. The routing agent can be an H.323 gatekeeper, gateway, or proxy, or a SIP proxy server or gateway to PSTN. Injected routes represent segments and components of the network that are not under the control of Telephony BGP. For example, an H.323/PSTN gateway that speaks Telephony BGP may inject routing entries for the E.164 prefixes that it can reach on the PSTN side. Each injected entry consists of the application layer/L7IP destination prefix and the cost associated with accessing it.

Interior Telephony BGP and Exterior Telephony BGP

[0164] Interior Telephony BGP is the protocol that will run between Telephony BGP neighbors belonging to the same AS. Its behavior relative to Exterior Telephony BGP is the same as IBGP's behavior relative to EBGP. Similar to IBGP, Interior Telephony BGP uses the LOCAL_PREF attribute to select between different routes for the same destination learned by different Internal Telephony BGP peers. To avoid creating loops, an Interior Telephony BGP peer does not advertise to other interior Telephony BGP peers routes that are learned via other Interior Telephony BGP peers.

[0165] Exterior Telephony BGP is very similar to EBGP, except that, unlike standard EBGP, exterior Telephony BGP neighbors are not required to be adjacent.

[0166] In standard BGP, before a BGP speaker advertises a route to an external peer, it updates the attributes in the Update message. For example, it updates the AS_path by prepending its own AS number. It also updates the NEXT_HOP attribute before forwarding the Update message to an EBGP peer. Telephony BGP uses the AS_path attribute in exactly the same fashion as does standard BGP. However, Telephony BGP uses the voice_next_nop attribute instead of the NEXT_HOP attribute. The voice_next_hop attribute has been described above. We will now describe how to update voice_next_hop using the topology **1900** of FIG. **19** in the example of FIG. **20**.

[0167] In the example in FIG. **20**, the SIP/PSTN gateway GW**2** is configured to route voice calls to PSTN destinations in the "408" area code. GW**2** speaks Telephony BGP. A call routing entry is injected into GW**2**'s Telephony BGP for destination prefix E.164"408*". In the example of FIG. **20**, GW**2** has only one configured neighbor, the SIP proxy server PX**5** of AS**5**. GW**2** forwards an Update message **2050** to PX**5** with following important information:

[0168] Address Family Identifier=E.164

[0169] Network Layer Reachability Information=408*

[0170] voice_next_hop={({address of GW**2**}, SIP)}

[0171] voice_cost=5

[0172] AS_path={AS**4**}

[0173] Note here that the emphasis in this example is on how the present invention, as embodied in Telephony BGP, works for routing PSTN/voice calls. The format shown for the attributes and fields is just one example. Also, Telephony BGP is an embodiment of the present invention which is built upon the framework of standard BGP. The Network Layer Reachability Information attribute is the attribute name used in the multi-protocol extensions to standard BGP and doesn't reflect that the present invention is performing layer 7 routing. Further, a voice_cost value of five is shown for the PSTN call leg from GW**2** to area code 408 and a cost of 1 is added for each AS hop.

[0174] PX**5** receives the Update message **2050** from GW**2**, creates a corresponding call routing entry in its routing table and forwards the Update message **2040** to its interior Telephony BGP neighbor GK**2** without any modifications. Upon receiving the Update message, GK**2** creates a corresponding call routing entry in its routing table and then modifies and forwards the Update message **2030** to all routing agents in adjacent ASes. In this case, the only Exterior Telephony BGP neighbor to GK**2** is GK**1**. GK**2** modifies the Update message as follows:

[0175] Address Family Identifier=E.164

[0176] Network Layer Reachability Information=408*

[0177] voice_next_hop={({address of GK**2**}, RAS), ({address of PX**5**}, SIP)}

[0178] voice_cost=6

[0179] AS_path={AS**3**, AS**4**}

[0180] Note that GK**2** has incremented the voice_cost value by one and added its own AS, AS**3**, to the AS_path list. Also, note that GK**1** has inserted its own layer 3/network layer address into the voice_next_hop list as being associated with the RAS protocol and inserted the address of PX**5** associated with the SIP protocol.

[0181] When GK**1** receives the Update message from GK**2**, it creates a call routing entry and forwards the Update message **2020** unmodified to its interior neighbor, PX**3**. Note here that PX**3**, a TBGP speaker, is not connected to any peers in other ASes. GK**1** also forwards the Update message to its exterior neighbor, PX**1**, after modifying it as follows:

[0182] Address Family Identifier=E.164

[0183] Network Layer Reachability Information=408*

[0184] voice_next_hop={({address of PX**2**}, Q.931), ({address of PX**3**}, SIP)}

[0185] voice_cost=7

[0186] AS_path={AS**2**, AS**3**, AS**4**}

[0187] There will be situations where the Internet Telephony components in an AS will not be interested in terminating a call leg and starting a new call leg for every phone call which traverses that AS (reasons for terminating call legs at intermediate ASes include enforcing security and QoS policies). In such situations, Telephony BGP speaker do not modify the voice_next_hop attribute before forwarding the Update message to the next AS. For the example of FIG. **20**, if AS**2** does not want to terminate voice calls going to area code 408, then the Update message **2010** going from GK**1** to PX**1** will include the following information:

[0188] Address Family Identifier=E.164

[0189] Network Layer Reachability Information=408*

[0190] voice_next_hop={({address of GK**2**}, RAS), ({address of PX**5**}, SIP)}

[0191] voice_cost=7

[0192] AS_path={AS**2**, AS**3**, AS**4**}

Route Selection

[0193] Below is an embodiment of a call route selection algorithm for use in the Telephony BGP embodiment of the present invention. Where multiple routes to the same destination exist at a given routing agent, Telephony BGP follows the steps below to choose the best route for forwarding voice calls from the routing agent towards the destination of a call:

[0194] 1. If a next hop entity is inaccessible, then the route associated with the entity is ignored.

[0195] 2. Prefer the route with the largest local preference (local policy has top priority). The local preference is assigned by the network engineer of the ISP which operates the AS containing the routing agent.

[0196] 3. If the routes have the same local preference, then prefer the route which has the least value for voice_cost. Note that the voice_cost attribute represents the aggregate cost of all intermediate hops of the ASes making up the IP network as well as the cost for accessing the PSTN at the end gateway.

[0197] 4. If the voice_cost values are equal, then prefer the route which was locally originated, i.e. a route that has been introduced to the network by the routing agent performing the selection algorithm.

[0198] 5. If there is still a tie among multiple routes, then prefer the route with the shortest AS_path, i.e. the fewest ASes in the AS_path. AS_path represents the number of AS hops, which is a simple cost metric used as a tie breaker.

[0199] 6. If there is still a tie, prefer the route with the lowest ORIGIN type. ORIGIN is an attribute set by the BGP speaker that injects the route into BGP. ORIGIN can take one of three values: internal (if the route was manually injected/configured on one of the interior neighbors of this routing agent); external (if the route was learned from an external AS); and incomplete (if the route was learned by redistribution from some interior routing protocol). BGP prefers internal over external over incomplete.

[0200] 7. If there is still a tie, prefer the route with lowest MED. (MED is a BGP attribute that can be included in a route update message from an AS to its peer AS. TBGP also includes MED. MED is used to select between different routes to the same destination being advertised by the same AS.)

[0201] 8. If there is still a tie, prefer the route being advertised by the Telephony BGP speaker with the lowest ID. The ID of a Telephony BGP speaker is its IP address. (This is an almost random final tie breaker.).

[0202] Note that there is no step in standard BGP that is analogous to Step 3 of the call routing algorithm discussed above. Also note that not all of the steps above need to be incorporated into a route selection algorithm. The selection criterion of Step 3 can be combined with some or all of the other criteria described above to best meet the requirements of the design.

[0203] The topology **2100** of FIG. **21** will now be used to illustrate the operation of the call routing algorithm for route selection in Telephony BGP. In topology **2100**, AS**1** **2130** includes a gateway **2132** (GW**1**) which, in the example of FIG. **21**, can access area code 408. AS**1** also includes gatekeeper **2134** (GK**1**) which is adjacent to gatekeeper **2144** (GK**3**) in AS**3** **2140** and gatekeeper **2154** (GK**2**) in AS**2** **2150**. AS**2** and AS**3** are further connected to the larger IP network **2160**.

[0204] In a first example using FIG. **21**, GK**1** has the locally originated route through gateway **2132** associated with destination prefix 408, and in addition learns, through routing Update messages from GK**2** and GK**3**, of two external routes associated with destination prefix 408. The three routes can be summarized as follows:

	Local route	Route from GK2	Route from GK3
voice_next_hop	{({address of GW1}, Q.931)}	{({address of GK2)}, RAS)}	{({address of GK3}, RAS)}
voice_cost	10	5	15
AS_path	{ }	{AS2, AS4, AS6}	{AS3, AS5}
Local preference	100	100	200

[0205] Note that the Local preference value for routes learned from GK**2** and GK**3** in this example are manually preconfigured on GK**1**.

[0206] Assume for purposes of the example that Step 1 of the route selection is always satisfied (i.e. the next hop routing agents are reachable). Step 2 is to compare the local preferences of the three routes, and the route learned from GK**3** is preferred because it has the largest local preference. However, for a second example using FIG. **21**, the configured local preference for routes learned from GK**3** changes as follows:

	Local route	Route from GK2	Route from GK3
voice_next_hop	{({address of GW1}, Q.931)}	{({address of GK2}, RAS)}	{({address of GK3}, RAS)}
voice_cost	10	5	15
AS_path	{ }	{AS2, AS4, AS6}	{AS3, AS5}
Local preference	100	100	50

[0207] In this second example, the route from GK**3** will be eliminated in Step 2, and the route from GK**2** will preferred over the local route in Step 3 because it has lower voice_cost value.

[0208] Now consider a third example wherein the voice_cost advertised by GK**2** changes as follows:

	Local route	Route from GK2	Route from GK3
voice_next_hop	{({address of GW1}, Q.931)}	{({address of GK2}, RAS)}	{({address of GK3}, RAS)}
voice_cost	10	10	15
AS_path	{ }	{AS2, AS4, AS6}	{AS3, AS5}
Local reference	100	100	50

In this case, there will be a tie at Step 3 between the external route from GK**2** and the local route through GW**1**. Therefore, the local route will be selected in Step 4.

Central Routing Table

[0209] A further refinement of the routing algorithm discussed above is a central routing table for storage of the best route or routes selected above. In addition to the TBGP Call Routing Table discussed above, a central routing table called a Telephony Routing Information Base (TRIB) is useful. The TBGP Call Routing Table contains information about all the possible paths for a particular destination obtained through the TBGP routing update messages. But only the best route selected by the route selection algorithm discussed above (or multiple routes if the selected algorithm results in several equally good routes) is inserted into the TRIB. The entries in the TRIB represent the best path or paths for routing incoming calls at a given point in time based upon the most recent update messages.

[0210] Changes in the network configuration will result in update messages being sent into the network indicating that certain paths are no longer valid or are temporarily out of service. Receipt of an update message will trigger the running of the route selection algorithm to determine the best path and the invalid entry in the TRIB is replaced with a new entry reflecting the results of the route selection algorithm. An advantage of this approach is that the routing selection algorithm need only be run when an update message arrives that invalidates a path in the TRIB rather than each time a call is received.

[0211] The TRIB also enables support for additional Telephony routing protocols having their own Call Routing Tables but that to factor into the overall routing equation through the TRIB. The route selection algorithm can be extended to assign a priority among a number of different protocol types. Thus, routes available in the routing tables for a first protocol type are preferred for insertion in the TRIB over routes available in the routing tables of a second protocol type.

[0212] For example, say that TIGP (Telephony Interior Gateway Protocol) has its own routing update messages and TIGP routing table. The TIGP routing table could also include reachability information regarding the same destination as an entry in the TBGP routing table. Therefore, the TIGP routing table would include entries which would contend for an entry or entries in the TRIB.

[0213] Thus, there are multiple algorithms at play. First, each telephony routing protocol has to decide the best path or paths from the multiple paths it determines to a particular destination via the reachability information. Say, for example, that TBGP has routing table candidates C**1**, C**2** and C**3** to reach a destination D and TIGP has candidates C**4**, C**5** and C**6** to reach destination D. Also assume that C**1**, C**2**, C**3**, C**4**, C**5** and C**6** are all currently valid. Further assume that out of path entries C**1**, C**2** and C**3**, TBGP determines that C**1** and C**2** are equal in cost and are better than C**3**. Also assume that out of C**4**, C**5** and C**6**, TIGP determines that C**4** and C**5** are equal in cost and are better than C**6**. The final candidates of TBGP for insertion into the TRIB are C**1** and C**2** and the final candidates of TIGP for insertion into the TRIB are C**4** and C**5**.

[0214] Next, assume that TBGP has a higher priority than TIGP, but TIGP has converged to the destination first, i.e. routing update messages for TIGP paths are received before routing update messages for TBGP paths. The priority of protocol types can be decided empirically and configured into the selection algorithm for a given routing entity. In this case, since there are no TBGP path entries for destination D, the TIGP entries C**4** and C**5** will be inserted into the TRIB as the best available paths to destination D. Subsequently, TBGP converges on the destination D and resulting in path entries C**1**, C**2** and C**3** and candidates C**1** and C**2** for insertion into the TRIB. Because TBGP has higher priority than TIGP, the TIGP path entries C**4** and C**5** in the TRIB will be replaced with TBGP path entries C**1** and C**2**.

[0215] Now assume that TBGP routing update messages are received that indicate that path entries C**1**, C**2** and C**3** are no longer valid. The routing selection algorithm is then triggered to delete the TBGP entries C**1**, C**2** and C**3** from the TBGP call routing table and C**1** and C**2** from the TRIB. Since TIGP entries C**4** and C**5** are still valid, the routing selection algorithm will reinsert them in the TRIB.

Aggregation of Addresses

[0216] Three distinct types of IP Telephony Addresses have been discussed: E.164 numbers, Internet domain names, and L7IP addresses. Aggregation of L7IP subnets follows the same procedures used for aggregating layer 3 IP subnets in standard BGP.

[0217] Domain names exhibit a natural hierarchy, and can be aggregated as illustrated in the following example: sj.cisco.com and rtp.cisco.com can be aggregated into cisco.com. However, the aggregation of domain names must be manually configured unlike L7IP addresses which can be automatically aggregated. For example, when a Telephony BGP speaker receives two routes, one for 172.21.0.0/24 (i.e. 24 bits are fixed and the range is 172.21.0.0 to 172.21.0.511) and the other for 172.21.1.0/24 (i.e. 24 bits are fixed and the range is 172.21.1.0 to 172.21.1.511), it can automatically aggregate them to 172.21.0.0/23 (i.e. 23 bits are fixed and the range is 172.21.0.0 to 172.21.1.511). However, if it receives two routes, one for sj.cisco.com and the other for rtp.cisco.com, it can't automatically aggregate them to cisco.com because there may be other domains, e.g. sb.cisco.com, which use a completely different route.

[0218] Aggregating E.164 prefixes works similarly to the aggregation of L7IP addresses. However, because E.164 prefixes are decimal numbers, we can also define ranges prefixes. This means that, when a Telephony BGP speaker receives routes for prefixes: 406, 407, and 408, it can aggregate them into a single route for the range prefix 40{6 . . . 8}. Range prefixes 40{2 . . . 6} and 40{6 . . . 8} can aggregated to 40{2 . . . 8}. However 40{2 . . . 4} and 40{6 . . . 8} can not be aggregated, except using manual configuration, because they are not overlapping.

[0219] The aggregation of the AS_path attribute in Telephony BGP follows the same mechanism used in standard BGP.

[0220] When aggregating the voice_cost attributes for multiple routes, the aggregate voice_cost value is set equal to the largest individual value. For example, if the route for prefix 406 has a voice_cost of 5 and the route for prefix 407 has a voice_cost of 8, then the aggregated route 40{6.7} has an aggregate voice_cost of 8.

[0221] The present invention, as embodied in the Telephony BGP protocol supports most of the call scenarios discussed above. Calls involving multiple hops in the IP network, multiple translations between different Internet telephony protocols, and a single hop to the PSTN, are all supported. However, Telephony BGP as described above still cannot intelligently direct routes which hop off to the PSTN at one point and then hop back onto the IP network at a different point because of the way the PSTN is presently configured. Thus, the call scenarios depicted in FIGS. **7** and **8** above are not supported.

[0222] The reason the present invention cannot be applied to the call scenarios of FIGS. **7** and **8** is that there is no means to exchange call routing information between the two IP networks across the PSTN. Even if the two IP networks of FIG. **7** were connected via the larger Internet, Telephony BGP still cannot propagate sufficient information about the destination IP network to the source IP network for the source IP network to construct a route involving a PSTN hop sandwiched between IP hops. This is because Telephony BGP is a path vector protocol. In other words, it advertises selected routes only and not the complete state of the network. The state of a destination IP network is gradually lost as the routes to that destination are propagated hop by hop.

[0223] This problem can be addressed through additional configuration of the Telephony BGP speakers at the interface between the IP network and PSTN. FIG. **22** shows an example.

[0224] In the topology **2200** of FIG. **22**, a first Internet subnet **2210**, having an IP network address of 20.0.0.0, includes a terminal **2212**, a gatekeeper **2214** and a gateway **2216** to PSTN **2230**. Gateway **2216** has a PSTN/E.164 phone number of 4085551212. Another Internet subnet **2220**, having an IP network address of 30.0.0.0, has a terminal **2222**, a gatekeeper **2224** and a gateway **2226** to PSTN **2230**. Gateway **2226** has a PSTN/E.164 phone number of 9195551212.

[0225] In FIG. **22**, the gatekeepers speak Telephony BGP. The following call routing entry is inserted on gatekeeper **2214**:

Destination	List of (List of Next Hop Network Address, Next Hop Protocol)
L7IP: 30.0.0.0/8	{({E.164:9195551212}, POTS)}

[0226] The voice_cost of this call routing entry should be set lower than the voice_cost for any other call route for the 30.0.0.0 network that may be learned from the Internet. When Terminal **2212** requests permission from gatekeeper **2214** to call **2222**, gatekeeper **2214** resolves the address for Terminal **2222** to an address in the 30.0.0.0/8 network. Based upon the call routing entry above, gatekeeper **2214** directs the call from Terminal **2212** to Gateway **2216**. Gateway **2216** consults gatekeeper **2214** for the next_hop for the call destination address. Gatekeeper **2214** instructs gateway **2216** to connect to 9195551212 on the PSTN **2230**. Gateway **2216** connects to Gateway **2226**. Gateway **2226** then consults its gatekeeper **2224** to resolve the destination address of the call and connects the call to Terminal **2222**.

[0227] Thus, though the examples of FIGS. **20** and **16** above were discussed in a context where the voice_next_hop attribute was a network layer/layer 3 IP address, the present invention can also be applied to an E.164 number as the next_hop. In addition, the next hop protocol may be POTS, not just Q.931, RAS, or SIP.

[0228] As in the Public Switched Telephone Network, a key function of an Internet telephony system is the routing of telephone calls. The routing of Internet telephony voice packets, while superficially similar to the routing of IP data packets, has many distinguishing characteristics which make IP routing protocols unsuitable for routing these calls. Similarly, the call routing techniques for routing telephone calls in the PSTN are only marginally applicable to the problem of routing Internet telephony calls in the IP network because of the very different architecture of the IP Internet from the PSTN. The present invention efficiently routes Internet Telephony calls through the topology of the Internet and through multiple domains.

[0229] Having described and illustrated the principles of the invention in a preferred embodiment thereof, it should be apparent that the invention can be modified in arrangement and detail without departing from such principles. For example, though the present invention is described in the context of routing voice calls for Internet Telephony, it will be understood by those of ordinary skill in the art that the present invention can be applied to the routing of packets based upon higher layer addresses, such as application layer/layer 7 addresses. Also, whereas routing agents are discussed above in terms of gatekeepers and other entities, it will be understood by those of ordinary skill in the art that the routing agent function can either be centralized in a single routing entity in an AS or distributed among several routing entities within the AS. We claim all modifications and variations coming within the spirit and scope of the following claims.

1-24. (canceled)

25. A call processing system, comprising:

a memory configured to contain routing table entries having network addresses and associated cost values; and

a processor configured to identify the network addresses providing access to a call request destination address

and further configured to select one of the identified network addresses according to the associated costs values.

26. A call processing system according to claim **25** wherein the processor is configured to select one of the identified network addresses having a lowest associated cost value.

27. A call processing system according to claim **25** wherein the processor is configured to select one of the identified network addresses according to local routing preferences associated with the network addresses.

28. A call processing system according to claim **25** wherein the processor is configured to receive call routing update messages including the destination address, network addresses, and associated cost values and using the routing update messages to update the routing table.

29. A call processing system according to claim **28** wherein the processor is configured to modify received call routing update messages by incrementing the cost values and then send the modified messages to a next hop in an IP network.

30. A call processing system of claim **25** wherein the network addresses are layer 3 addresses and the destination address is a layer 7 address.

31. The call processing system of claim **25** wherein the network addresses are Internet Protocol (IP) addresses and the destination address is an E.164 address.

32. The call processing system of claim **25** wherein the cost values are associated with an aggregate cost for accessing the destination address.

33. The call processing system of claim **25** wherein the routing table entries include protocol types for conducting IP call signaling and the processor selects one of the network addresses according to the protocol types.

* * * * *