WILSON SONSINI GOODRICH & ROSATI, P.C.
AMY H. CANDIDO, SBN 237829
(acandido@wsgr.com)
CHRISTOPHER D. MAYS , SBN 266510
(cmays@wsgr.com)
SACHLI BALAZADEH-NAYERI, SBN 341885
(snayeri@wsgr.com)
One Market Plaza
Spear Tower, Suite 3300
San Francisco, CA 94105-1126
Telephone: (415) 947-2000

ERIC P. TUTTLE, SBN 248440
(eric.tuttle@wsgr.com)
ARIEL C. GREEN ANABA, SBN 304780
(aanaba@wsgr.com)
LISA D. ZANG, SBN 294493
(lzang@wsgr.com)
953 East Third Street, Suite 100
Los Angeles, CA 90071
Telephone: (323) 210-2900

Attorneys for Plaintiff and Counter-Defendant ChromaCode, Inc.
(Additional counsel listed on following page)

UNITED STATES DISTRICT COURT

NORTHERN DISTRICT OF CALIFORNIA

SAN JOSE DIVISION

CHROMACODE, INC., AND CALIFORNIA INSTITUTE OF TECHNOLOGY, Plaintiffs and Counter-Defendants, v. BIO-RAD LABORATORIES, INC., Defendant and Counter-Plaintiff.	Case No. 5:23-cv-06360-EJD **PLAINTIFFS AND COUNTER-DEFENDANTS CHROMACODE, INC. AND CALIFORNIA INSTITUTE OF TECHNOLOGY'S OPENING CLAIM CONSTRUCTION BRIEF** Date: August 28, 2024 Time: 10:00 a.m. Department: Courtroom 4 – 5th Floor Judge: Hon. Edward J. Davila

SHEPPARD, MULLIN, RICHTER & HAMPTON, LLP
MARTIN R. BADER, SBN 222865
(mbader@sheppardmullin.com)
JESSE A. SALEN, SBN 292043
(jsalen@sheppardmullin.com)
12275 El Camino Real, Suite 100
San Diego, California 92130-4092
Telephone: 858.720.8900
Facsimile: 858.509.3691

DARREN M. FRANKLIN, SBN 210939
(dfranklin@sheppardmullin.com)
333 South Hope Street, 43rd Floor
Los Angeles, California 90071-1422
Telephone: 213.620.1780
Facsimile: 213.620.1398

BRADLEY C. GRAVELINE, *pro hac vice*
(bgraveline@sheppardmullin.com)
321 North Clark St., 32nd Floor
Chicago, Illinois 60654
Telephone: 312.499.6300
Facsimile: 312.499.6301

Attorneys for Plaintiffs and Counter-Defendants
ChromaCode, Inc. and California Institute of Technology

TABLE OF CONTENTS

Page

I. INTRODUCTION 1

II. BACKGROUND 2

A. The Caltech Asserted Patents 4

III. CONSTRUCTION OF THE DISPUTED TERMS 6

A. Bio-Rad's Incorrect "Non-Limiting" Constructions 6

1. "single sample solution volume" ('051 Claim 1)

"wherein said method non-degenerately detects the presence or absence of the at least seven polynucleotide analytes in said single sample solution volume, in any combination of presence or absence" ('051 Claim 1) 7

B. Bio-Rad's Incorrect Attempts to Redefine Claim Terms 10

1. "each [of said at least 5] hybridization probe[s]" ('051 Claim 1; '170 Claim 1) 10

2. "exciting said at least one fluorophore to generate one or more signals if one or more of said at least five polynucleotide analytes is present in said plurality of droplets" ('170 Claim 1) 12

3. "cumulative intensity signal(s)" ('051 Claims 1, 4) 13

4. "cumulative [signal/intensity] measurement" ('051 Claim 1; '170 Claim 1) 15

C. Bio-Rad's Erroneous Indefinite Constructions 17

1. "corresponds to the presence of a unique combination of presence or absence of said at least five polynucleotide analytes in said sample" ('170 Claim 1) 18

2. "providing a sample solution volume … comprising at least seven hybridization probes" and "contacting …" ('051 Claim 1) 21

D. Bio-Rad's Degeneracy Constructions 23

1. "non-degenerately," "degenerate" or "degeneracy" ('051 Claim 1; '921 Claims 4, 13, 14) 23

IV. CONCLUSION 24

TABLE OF AUTHORITIES

Page(s)

CASES

Allergan Sales, LLC v. Sandoz, Inc.,
935 F.3d 1370 (Fed. Cir. 2019) 7

Am. Med. Sys., Inc. v. Biolitec, Inc.,
618 F.3d 1354 (Fed. Cir. 2010) 24

Bio-Rad Laboratories, Inc. v. 10X Genomics Inc.,
967 F.3d 1353 (Fed. Cir. 2020) 9

Biosig Instruments, Inc. v. Nautilus, Inc.,
783 F.3d 1374 (Fed. Cir. 2015) 17

Catalina Mktg. Int'l, Inc. v. Coolsavings.com, Inc.,
289 F.3d 801 (Fed. Cir. 2002) 10

GE Lighting Sols., LLC v. AgiLight, Inc.,
750 F.3d 1304 (Fed. Cir. 2014) 1

Grace Instrument, Indus., LLC v. Chandler Instruments Co.,
57 F.4th 1001 (Fed. Cir. 2023) 17

Griffin v. Bertina,
285 F.3d 1029 (Fed. Cir. 2002) 7, 10

Hoffer v. Microsoft Corp.,
405 F.3d 1326 (Fed. Cir. 2005) 9

Ironburg Inventions Ltd. v. Valve Corp.,
64 F.4th 1274 (Fed. Cir. 2023) 17

Liebe-Flarsheim Co. v. Medrad, Inc.,
358 F.3d 898 (Fed. Cir. 2004) 15, 17

Medicines Co. v. Mylan, Inc.,
853 F.3d 1296 (Fed. Cir. 2017) 23, 24

Phillips v. AWH Corp.,
415 F.3d 1303 (Fed. Cir. 2005) ..... *passim*

Poly Am. L.P. v. GSE Lining Tech., Inc.,
383 F.3d 1303 (Fed. Cir. 2004) 10

Pursuant to Patent L.R. 4-5(a), Plaintiffs and Counter-Defendants ChromaCode, Inc. ("ChromaCode") and California Institute of Technology ("Caltech") (collectively "Plaintiffs") submit this Opening Claim Construction Brief on the proper construction of disputed claim terms of U.S. Patent Nos. 10,068,051 (the "'051 Patent"), 10,770,170 (the "'170 Patent"), and 11,827,921 (the "'921 Patent") (collectively the "Caltech Asserted Patents").

I. INTRODUCTION

Bio-Rad's proposed constructions improperly attempt to rewrite the claims, inexplicably departing from their plain meaning. Claim terms are generally given their plain and ordinary meaning, i.e., the meaning they would have to a person of ordinary skill in the art when read in the context of the specification and prosecution history. *Phillips v. AWH Corp.*, 415 F.3d 1303, 1312-13 (Fed. Cir. 2005) (en banc). Courts may depart from the plain and ordinary meaning in two instances: lexicography and disavowal. *GE Lighting Sols., LLC v. AgiLight, Inc.*, 750 F.3d 1304, 1309 (Fed. Cir. 2014). Bio-Rad's proposed constructions repeatedly err—by ignoring the plain meaning, by reading express limitations out of the claims, and by reading new limitations into the claims. Bio-Rad's proposed constructions thus should be rejected.

First, Bio-Rad improperly attempts to ignore a subset of claim language in the "wherein" clause of claim 1 of the '051 Patent and dismiss it as non-limiting. The "wherein" clause requires that the method non-degenerately detect the presence or absence of at least seven polynucleotides ***in a single sample solution,*** in any combination of presence or absence, without requiring any step of immobilization of said analytes, physical separation of said analytes, or mass spectrometry. This clause, together with its antecedent basis in the preamble, was amended during prosecution to clarify that its requirements are limiting in order to distinguish prior art and to obtain allowance of the claims. Bio-Rad's improper attempts to read them out of the claim should be rejected.

Second, Bio-Rad improperly attempts to rewrite the claims via construction. For example, Bio-Rad wants to rewrite "each hybridization probe" as "each collection of hybridization probes," introducing new language that improperly reads additional limitations into the claims. Bio-Rad similarly wants to rewrite "is present" as "contacts at least one probe," again reading new limitations into the claims. Bio-Rad also attempts to rewrite "cumulative intensity" to eliminate

both "cumulative" and "intensity," and replace them with new limitations about "probes that contact a given analyte." In each rewrite, Bio-Rad ignores the plain claim language and the supporting disclosure. These rewrites should be rejected.

Bio-Rad's indefiniteness arguments similarly disregard the plain meaning of the claims, which is amply supported by the specification's description of the claimed invention. As Bio-Rad's own expert recently testified under oath regarding the '051 and '170 Patents, "each claim term can be easily understood by the skilled artisan without further construction," "based on the plain and ordinary meaning of the claim terms." *See* Tuttle Decl., Ex. A (IPR2024-01177, Ex. 1002) at ¶¶ 19, 130, 132. Bio-Rad ignores the plain language of the claims and the description provided in the specification when arguing these claims should be construed to be indefinite.

II. BACKGROUND

Like Bio-Rad's asserted patents, the Caltech Asserted Patents are directed to the problem of detecting many different chemical compounds in a single volume of sample, when there are more potential compounds of interest than there are unique colors with which to label them. Although they tackle the same problem, the Caltech and Bio-Rad patents approach this problem from different directions.

The Caltech Asserted Patents relate to biochemical assays that identify whether specific polynucleotide sequences (e.g., DNA) are present in a tested sample volume. In such assays, a targeted polynucleotide sequence (called an "analyte" or "target") can be identified in the tested sample volume by detecting a fluorescent signal. '051 Patent, 33:32-42, 34:13-35. The analytes are amplified by making many copies, and can then be detected using probes. Probes have nucleic acid sequences designed to bind to a particular analyte. After a probe binds (or "hybridizes") to an analyte, chemicals on the probe called "fluorophores" fluoresce light of a particular color (or wavelength band, also called a "channel"). *Id.* Using probes, the presence of a particular analyte in a tested volume can be detected by looking for light of a particular color being emitted in the tested volume. *Id.* at 33:32-42, 34:13-35, 47:30-45. If the targeted analyte is not present in the analyzed sample volume, the probe will not hybridize to the targeted analyte and little or no fluorescent signal from that probe will be detected. *Id.*

The traditional method for detecting multiple different analytes in a single volume is to use a different color for each analyte. ’051 Patent, 11:48-12:4. This is illustrated by Table 1 and Figure 1 of the Caltech Asserted Patents:

TABLE 1

Traditional encoding of four analytes with four probes, each probe having a single color, and one probe per analyte.

	Blue	Green	Yellow	Red
A	1	0	0	0
B	0	1	0	0
C	0	0	1	0
D	0	0	0	1

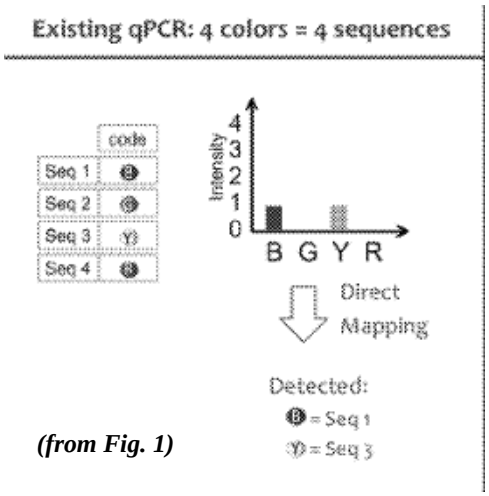

(from Fig. 1)

In this example, the probes for each of four potential analytes (A, B, C, and D, also labeled “Seq 1,” “Seq 2,” Seq 3,” and “Seq 4”) are designed to emit light of one particular color. The probes for analyte A (aka Seq 1) emit light with “a color of blue and an intensity of 1.” *Id.* at 12:4-11. The probes for analyte C (Seq 3) emit yellow light with intensity 1. This defines an encoding scheme for the analytes, which can be decoded just by reading the light that comes out of the volume. *Id.* If blue and yellow light are detected in the volume, but not green or red, that tells us that A (Seq 1) and C (Seq 3) are present, and that B (Seq 2) and D (Seq 4) are absent. *Id.*at 11:64-12:3.

The problem with this method is that “it is limited by the number of spectrally resolvable fluorophores,” i.e., distinct colors, such that “the number of analytes may only be increased by increasing the number of [distinct colors].” ’051 Patent, 12:31-37. Otherwise, the observed light does not uniquely correspond to a particular combination. Imagine a fifth analyte “E” being added to Table 1, encoded as 1 blue and 1 green. If the volume was observed to emit blue and green light, we could not tell whether E was present, or whether A and B were both present. The signal cannot be uniquely decoded.

As discussed in the claim construction briefs for the Bio-Rad Patents, those patents attempt to address this problem of more analytes than colors by processing the observed data on the *back end*, using statistical methods to infer what is most likely to have produced the convoluted light signals. The Caltech Asserted Patents approach this problem from the *front end.* By thoughtfully

encoding the analytes in a particular way, one can still ensure that the light signal coming out of the volume can be uniquely decoded to only one possible combination of analytes, even when there are more analytes than colors. With such a "nondegenerate" encoding scheme properly implemented on the front end, a multitude of analytes can be detected just by reading the light emitted in the volume, with no statistical analysis needed on the back end to tease out what is present. This is explained further below.

A. The Caltech Asserted Patents

The Caltech Asserted Patents address the problem of having potentially many different analytes of interest amplified in a single sample volume (e.g., a well or droplet). Such multiplexed reactions offer significant advantages over traditional uniplex reactions, including use of the same chamber to perform multiple reactions and the ability to extract rich information from a sample in a fast and efficient manner. '051 Patent, Title, Abstract, 1:30-42. However, before the Caltech Asserted Patents, achieving these benefits generally required complex reporting mechanisms, or spatially or temporally resolved signals. *Id.* The Caltech Asserted Patents thus addressed the need "for multiplexed reactions that can be carried out in a single solution." *Id.* They accomplish this without needing to resort to physical manipulation (e.g., immobilization or separation) or mass spectrometry.

The Caltech Asserted Patents' inventors conceived of a key innovation to identify the presence of any possible combination of multiple potential analytes in a single volume: the nondegenerate encoding scheme. With a nondegenerate encoding scheme, every unique potential combination of analytes corresponds unambiguously to a unique light signature. Simply by reading the light signature coming out of the tested volume, one can identify any possible combination of the presence or absence of the potential analytes in the volume.

To understand what a *nondegenerate* encoding scheme looks like, it helps to start with a *degenerate* encoding scheme.

Table 3 of the Caltech Asserted Patents illustrates a ***degenerate*** encoding scheme. In this example, four colors (Blue, Green, Yellow, and Red) are used to detect more than four analytes. There are eight potential analytes (p, A, B, C, D, E, F, and G). The probes designed to bind to each of these analytes use different fluorophores to give off light in certain colors at certain intensities. For example, the probes for analyte A are designed to emit blue light at 1 unit of intensity, no green light, no yellow light, and red light at 1 unit of intensity. The probes for analyte E are designed to emit blue light at intensity 1, green light at intensity 1, no yellow light, and red light at intensity 1. If both analyte A and analyte E are present in the sample volume, then the *cumulative* light emitted from the volume is the *sum* of the light from the probes for each of the two analytes: blue at 2 units of intensity, green at 1 unit of intensity, no yellow light, and red at 2 units of intensity.

TABLE 3

Encoding of eight analytes (including control) with four colors and up to four colors per analyte.

	Blue	Green	Yellow	Red
Ctrl. (p)	1	0	0	0
A	1	0	0	1
B	1	0	1	0
C	1	1	0	0
D	1	0	1	1
E	1	1	0	1
F	1	1	1	0
G	1	1	1	1

This encoding scheme is degenerate because the same cumulative light signal coming out of a volume could potentially correspond to more than one possible combination of analytes present. This is illustrated by Table 4 in the Caltech Asserted Patents. For example, the combination of p, A, and F would result in cumulative light emission with blue at intensity level 3, green at intensity level 1, yellow at intensity level 1, and red at intensity level 1. But the combination of p, C, and D would also result in that same cumulative light emission. So would the combination of p, B, and E. Thus, if one observed light coming from a sample volume with 3 units of blue light, 1 unit of green light, 1 unit of yellow light, and 1 unit of red light, one would not be able to tell whether the volume contained pAF, pCD, or pBE. All three would be possible explanations for that light signature. *See, e.g.*, '051 Patent, 17:65-18:15.

Table 5 of the Caltech Asserted Patents, on the other hand, illustrates a nondegenerate encoding scheme. With this encoding scheme, every possible combination of analytes produces a unique light signature; no two combinations of any number of analytes would emit the same

cumulative light signal. Tables 6 and 7 show how such a nondegenerate encoding scheme can be constructed, and Table 8 illustrates another way to create a different nondegenerate encoding scheme. *See, e.g.*, ’051 Patent, 18:34-20:21, 23:31-58.

TABLE 5

Coding scheme for detection of dengue virus, *Mycobacterium*, HIV, *Plasmodium*, and herpes simplex, as exemplified in FIG. 2.

	Blue	Green	Yellow	Red
Ctrl. (p)	1	0	0	0
Herpes Simplex	1	0	0	1
Plasmodium	1	0	1	0
HIV	1	1	0	0
Mycobacterium	1	1	0	1
Dengue Virus	1	1	1	1

When a nondegenerate encoding scheme is used and properly implemented on the front end, the cumulative light signal emitted from the sample volume can simply be read, and it uniquely corresponds to only one possible combination of analytes present. Thus, there is no need to engage in the types of statistical analysis on the back end that Bio-Rad’s patents teach as a way to infer the most likely combinations of targets present from a convoluted light signal.

The Caltech Asserted Patents are continuations of one another and all share the same specification. The claims of the ’170 and ’051 Patents recite the invention in the form of methods, and the ’921 Patent is directed to an assay. In the ’051 Patent claims, the number of potential analytes detected in any combination of presence or absence from the cumulative intensity signal measurement for the tested volume is at least seven. In the ’170 Patent claims, the required number of potential polynucleotide analytes is lower (at least five). In the ’921 Patent claims, the floor of required number of potential polynucleotide analytes is lower than five.

III. CONSTRUCTION OF THE DISPUTED TERMS

A. Bio-Rad’s Incorrect “Non-Limiting” Constructions

Claim 1 of the ’051 Patent has four over-arching requirements: (1) a providing step (a); (2) a contacting step (b); (3) a measuring step (c); and (4) the requirements of the “wherein” clause that the method non-degenerately detects the presence or absence of at least seven polynucleotide analytes ***in said single sample solution*** in any combination of presence or absence, without requiring any step of immobilization or physical separation of the analytes or requiring mass spectrometry. As shown in the charts below, Bio-Rad proposes to construe the “single sample solution volume” limitation in the preamble and the “said single sample solution volume” limitation in the “wherein” clause as “non-limiting” so that it can ignore express limitations of the

claims. Bio-Rad's construction is contrary to law. *See Phillips*, 415 F.3d at 1327 (court will not "revise or ignore the explicit language of the claims"). It should be rejected.

1. "single sample solution volume" ('051 Claim 1)

"wherein said method non-degenerately detects the presence or absence of the at least seven polynucleotide analytes in said single sample solution volume, in any combination of presence or absence" ('051 Claim 1)

Claim Term(s)	Plaintiffs' Proposed Construction	Bio-Rad's Proposed Construction
"single sample solution volume"	Limiting	Non-limiting
"wherein said method non-degenerately detects the presence or absence of the at least seven polynucleotide analytes in said single sample solution volume, in any combination of presence or absence"	Limiting	Non-limiting

Bio-Rad improperly seeks to read the phrase "single sample solution volume" out of the claims of the '051 Patent, arguing that it should be ignored in both the preamble and the body of the claim. Bio-Rad's argument is meritless.

Claim 1 of the '051 Patent claims a "method of detecting the presence or absence of at least seven polynucleotide analytes … in a single sample solution volume." '051 Patent, cl.1 (preamble). The "wherein" clause, which speaks to how that detection is performed, is limiting. Claim language that merely recites an intended result is not limiting, but language that gives meaning and purpose to the steps, read in light of entire specification and prosecution history, is limiting. *See, e.g.*, *Griffin v. Bertina*, 285 F.3d 1029, 1033-34 (Fed. Cir. 2002); *Allergan Sales, LLC v. Sandoz, Inc.*, 935 F.3d 1370, 1374-76 (Fed. Cir. 2019).

In measuring step (c), a cumulative signal measurement is generated that non-degenerately indicates the presence or absence of the at least seven polynucleotides, in any combination of presence or absence. The "wherein" clause answers at least two questions about how the presence or absence of the analytes is detected in the method. First, "said method non-degenerately detects the presence or absence of the at least seven polynucleotide analytes ***in said single sample solution volume***." Detecting in a single sample solution volume is thus more than an intended

result, it is a key limitation on how the detection takes place.

Second, the "wherein" clause specifies that the presence or absence of the at least seven polynucleotide analytes in said single sample solution, in any combination of presence or absence, must be detected "***without requiring any step of immobilization or physical separation of the analytes or requiring mass spectrometry***." In other words, non-degenerate detection of the at least seven polynucleotide analytes in said single sample solution volume that requires immobilization or physical separation of the analytes or that requires mass spectrometry is not sufficient to practice the claim. Bio-Rad's attempt to read out the first of these two limitations (but curiously not the second) improperly "revises or ignores the explicit language of the claims." *See Phillips*, 415 F.3d at 1327. This is not permitted.

By its plain terms, claim 1 of the '051 Patent is not satisfied by detection of the at least seven polynucleotide analytes ***merely across multiple sample solution volumes***, just the same as it is not satisfied by ***degenerately*** detecting the presence or absence of the at least seven polynucleotide analytes. That the recited detection is performed for all seven potential analytes in said single sample solution volume is an express limitation of the claim. This limitation distinguishes the claims from approaches in which degenerate results might be disambiguated through a second reaction in a second sample volume.

The specification confirms that detection of the presence or absence of the at least seven analytes ***in said single sample solution volume*** is a part of the claimed process itself, and not just an intended result. The specification repeatedly describes an invention in which the presence or absence of the at least seven analytes is detected in a said single sample solution volume, just as the claim language recites. For example, the single sample solution requirement recited in the claims of the '051 patent is specifically described in the Abstract and in the Summary of the Invention. '051 Patent, Abstract ("methods, systems, compositions and kits wherein multiple analytes may be detected in a single sample volume"), 1:46-54 ("assays that are capable of unambiguously detecting the presence or absence of each of at least 7 analytes, in any combination of presence or absence, in a single sample volume"), 1:41-42 (before the invention, there was "a need for multiplexed reactions that can be carried out in a single solution"), 4:66-5:4 ("[t]his

disclosure also provides non-degenerate coding schemes capable of unambiguously encoding the presence or absence of each of at least 7 analytes … in a single sample volume"). Accordingly, the specification confirms that the single sample solution volume" language in the "wherein" clause limits how the method is performed.

The prosecution history provides further intrinsic evidence confirming that the "single sample solution volume" language recited in the claim is limiting. As the Federal Circuit has explained, reliance on claim language during prosecution to obtain allowance of the claims generally precludes finding that claim language non-limiting. S*ee Hoffer v. Microsoft Corp.*, 405 F.3d 1326, 1329 (Fed. Cir. 2005) ("[W]hen [a] 'whereby' clause states a condition that is material to patentability, it cannot be ignored in order to change the substance of the invention."). During prosecution, the claims were amended to add the "single sample solution volume" limitation. The "wherein" clause was amended specifically to overcome the Patent Office's assertion that "the capability" was "an intended use" that did not differentiate the recitations of the claims from the prior art. Tuttle Decl. Ex. B ('051 Patent FH, May 2, 2017 Response) at 8-9. The claim amendment established that, rather than reciting merely a capability or an intended purpose, the claim required that the method "detects" non-degenerately in a single sample volume, and to add the requirement that it do so "without immobilization of said analytes, physical separation of said analytes, or mass spect[r]ometry." *Id.* at 4-5 (claim 49).

Subsequently, the claim was further amended to provide antecedent basis in the preamble for the "said single sample solution volume" limitation. *See* Tuttle Decl. Ex. C ('051 Patent FH, Nov. 6, 2017 Response) at 4-5 (claim 49). These amendments were also entered to obtain allowance of the claims. *See id.* at 10-11 ("the instant claims are limited to a specific process of detecting the presence or absence of each analyte of a plurality of polynucleotide analytes ***in a single sample volume without immobilization, physical separation, or mass spectrometry***.").

This preamble is also limiting, for multiple reasons. First, the preamble's recitation of "a single sample solution volume" provides the antecedent basis for "said single sample solution volume" in the wherein clause. *See Bio-Rad Labs., Inc. v. 10X Genomics Inc.*, 967 F.3d 1353, 1370-72 (Fed. Cir. 2020). Second, as explained above, the specification confirms that the

preamble recites a fundamental characteristic of the claimed invention. *See Poly Am. L.P. v. GSE Lining Tech., Inc.*, 383 F.3d 1303, 1310 (Fed. Cir. 2004). Third, as explained above, the limitation to a single sample solution volume was added and relied on during prosecution to obtain allowance. *See Catalina Mktg. Int'l, Inc. v. Coolsavings.com, Inc.*, 289 F.3d 801, 808-10 (Fed. Cir. 2002).

Bio-Rad's argument is similar to that rejected in *Griffin*, where references to diagnosis that appeared in both the preamble and the wherein clauses were held to be limiting. 285 F.3d at 1033-34. The recitation in both places confirmed that this requirement was "the essence of the invention," giving "life and meaning" and "purpose" to the manipulative steps. *Id.* at 1033. So too here. Bio-Rad's attempts to eliminate the express "single sample solution volume" requirement from two places in the claims should be rejected.

B. Bio-Rad's Incorrect Attempts to Redefine Claim Terms

1. "each [of said at least 5] hybridization probe[s]" ('051 Claim 1; '170 Claim 1)

Claim Term(s)	Plaintiffs' Proposed Construction	Bio-Rad's Proposed Construction
"each [of said at least 5] hybridization probe[s]"	Plain and ordinary meaning	"each collection of hybridization probes specific for a polynucleotide analyte"

Claim 1 of the '051 and '170 Patents both use the word "each" according to the plain and ordinary meaning of this word. In each case, no construction is required or merited.

Bio-Rad's proposed construction rewrites two different claims of two patents, including at multiple locations in one claim. The providing step (a) of claim 1 of the '051 Patent requires that the sample solution volume potentially comprising at least seven polynucleotide analytes also comprises at least seven hybridization probes, with ***each hybridization probe*** corresponding to one of the at least seven analytes. The providing step (a) specifies that each hybridization probe comprises at least one fluorophore selected from four fluorophores. Claim 1 of the '170 Patent recites a providing step (a) and a mixing step (b), among others. In the mixing step (b), the claim specifies that each of said at least 5 hybridization probes further comprises at least one fluorophore and at most four fluorophores. In '170 Patent claim 1, the floor for potential polynucleotide

analytes is five instead of seven, and the hybridization probe floor is reduced accordingly.

For these two claims, Bio-Rad seeks to replace ***each hybridization probe*** with a new limitation, ***each collection of hybridization probes specific for a polynucleotide analyte***. Accordingly, step (a) of the '051 Patent would be rewritten in multiple locations, as follows (added language proposed by Bio-Rad shown in red, stricken language in strikethrough):

> each ~~hybridization probe~~ collection of hybridization probes specific for a polynucleotide analyte corresponding to one of the at least seven polynucleotide analytes, wherein each ~~hybridization probe~~ collection of hybridization probes specific for a polynucleotide analyte comprises at least one fluorophore selected from four fluorophores, and wherein each ~~hybridization probe~~ collection of hybridization probes specific for a polynucleotide analyte, when excited and when contacted with its corresponding polynucleotide analyte, generate a cumulative intensity signal….

Bio-Rad's construction thus improperly reads a new concept into the claim by requiring ***a collection of*** hybridization probes ***specific for a single polynucleotide analyte***. These additional limitations appear nowhere in the claim language, and are not compelled by anything in the specification. Bio-Rad's rewrite of claim 1 of the '170 Patent similarly attempts to read additional limitations into these claims that are not found in the plain language of the claim. This is improper and should be rejected. *See Phillips*, 415 F.3d at 1320-23 (reading a limitation into the claims is "one of the cardinal sins of patent law").

The impropriety of Bio-Rad's construction is further confirmed by the observation that Bio-Rad's rewrite destroys a reference in the claim back to a prior phrase and replaces it with something different. In the '051 Patent, the antecedent for "each hybridization probe" in the providing step (a) is found earlier in the same step, which begins by reciting that the sample solution volume comprises at least seven hybridization probes, each probe corresponding to one of the at least seven potential analytes. In the '170 Patent, the antecedent basis for "each of said at least five hybridization probes" in mixing step (b) is found earlier in the same step, where the sample is mixed with "at least five hybridization probes." By replacing the phrase "each [of said] hybridization probe(s)" with "each collection of hybridization probes specific for a polynucleotide analyte," Bio-Rad destroys the reference in the claim to an existing antecedent and replaces it with something new lacking an antecedent in the claim.

2. "exciting said at least one fluorophore to generate one or more signals if one or more of said at least five polynucleotide analytes is present in said plurality of droplets" ('170 Claim 1)

Claim Term(s)	Plaintiffs' Proposed Construction	Bio-Rad's Proposed Construction
"exciting said at least one fluorophore to generate one or more signals if one or more of said at least five polynucleotide analytes is present in said plurality of droplets"	Plain and ordinary meaning	"exciting said at least one fluorophore to generate one or more signals if one or more of said at least five polynucleotide analytes contacts at least one probe in said plurality of droplets"

Claim 1 of the '170 Patent uses the words "is present" according to their plain and ordinary meaning. No construction is needed. Bio-Rad improperly seeks to rewrite a straightforward English word to make it mean something convoluted and technical, and in the process rewrite the "exciting" step (d) to remove the connection between that step, the preamble, and the measuring and determining steps (e) and (f). Bio-Rad's construction should be rejected.

The preamble recites a method of unambiguously detecting any unique combination of ***presence*** or absence of at least five polynucleotide analytes in a plurality of droplets. The body of the claim relies on this preamble as antecedent basis for "said at least five polynucleotide analytes." In step (d), at least one fluorophore is excited to generate signal(s) if one or more of said analytes is ***present***. In step (e), the cumulative intensity measurement corresponds to the presence of a unique combination of ***presence*** or absence of said analytes. In step (f), whether each of said analytes is ***present,*** in any unique combination of presence or absence, is determined based on said cumulative intensity measurement. The '170 Patent repeatedly discloses detecting any unique combination of presence or absence of at least five polynucleotide analytes, including by exciting at least one fluorophore to generate signal(s) if one or more of said analytes is present. *See, e.g.*, '170 Patent, 16:65-17:56, 13:34-16:26. Bio-Rad's selective rewriting of the words "is present" in step (d) improperly divorces it from the preamble and steps (e) and (f), contrary to the plain language of the claim. *See Phillips*, 415 F.3d at 1327. Whether something "is present" or not is not technical jargon, but rather an ordinary concept capable of being understood by its plain meaning. Rather than stick with the ordinary and easily-understood meaning of "presence," Bio-Rad instead

makes up new language about analytes "contact[ing] a probe" that is not found in the claim language and not required by the specification—thereby ***introducing*** new jargon that wasn't there before.

3. "cumulative intensity signal(s)" ('051 Claims 1, 4)

Claim Term(s)	Plaintiffs' Proposed Construction	Bio-Rad's Proposed Construction
"cumulative intensity signal(s)"	Plain and ordinary meaning. To the extent a construction is necessary, "signal representing the total intensity of the light emitted by a given probe"	"the signal or collection of signals from the probes that contact a given analyte"

Claims 1 and 4 of the '051 Patent recite the term "cumulative intensity signal(s)" using the plain and ordinary meaning of these words. No construction is required. To the extent any construction is given, it must account for the plain and ordinary meaning of these terms consistent with how the invention is described in the claims and the specification. Bio-Rad's construction improperly rewrites the term "cumulative intensity signal" to delete each of the key concepts of "cumulative" and "intensity." According to the claim language itself, a cumulative intensity signal is a signal representing a total (i.e., cumulative) intensity.

In the context of the present claims, the "cumulative intensity" refers to total intensity of light emitted by a given probe. Step (a) of claim 1 of the '051 Patent recites "each hybridization probe, when excited and when contacted with its corresponding polynucleotide analyte, generates a cumulative intensity signal, further wherein each generated cumulative intensity signal comprises at least one signal generated by excitement of at least one of the four fluorophores." Step (b) recites "contacting said sample solution volume and exciting the hybridization probes to generate the cumulative intensity signal(s) if one or more of the at least seven polynucleotide analytes is present in the sample volume."[1] Step (c) recites "measuring the cumulative intensity signal(s), thereby generating a cumulative signal measurement" that "non-degenerately indicates

[1] Unlike for the '170 Patent, Bio-Rad is not seeking to construe "is present" in the '051 Patent as "contacts at least one probe".

the presence or absence of the at least seven polynucleotide analytes, in any combination of presence or absence." In each case, the meaning of cumulative intensity signal is the same. It is a signal representing the total intensity of light emitted by a given probe.

This is also reflected in the specification. Table 1 shows how analytes are encoded by both "color" and "intensity" (indicated by the numbers within the table). '051 Patent, 12:4-27. The same format is carried forward to the encoding scheme in Table 3, shown at right. For example, in Table 3, analyte p has a color of blue and an intensity of 1. Table 4, also shown at right, gives the "cumulative assay result" when multiple analytes are present in the assay and encoded with the scheme in Table 3. The intensity of each color for the combination of multiple analytes is the sum total of the intensity for that color for each of the analytes present. Thus, if analyte p has intensity 1 0 0 0 (in blue, green, yellow, and red, respectively), analyte A has intensity 1 0 0 1, and analyte B has intensity 1 0 1 0, then the cumulative intensity when p, A, and B are all present is 3 0 1 1. *Id.*, Tables 3 & 4.

TABLE 3

Encoding of eight analytes (including control) with four colors and up to four colors per analyte.

	Blue	Green	Yellow	Red
Ctrl. (p)	1	0	0	0
A	1	0	0	1
B	1	0	1	0
C	1	1	0	0
D	1	0	1	1
E	1	1	0	1
F	1	1	1	0
G	1	1	1	1

TABLE 4

Decoding matrix for encoding method presented in Table 3.

Cumulative Assay Result				
Blue	Green	Yellow	Red	Analyte(s) Present
1	0	0	0	p
2	0	0	1	pA
2	0	1	0	pB
2	1	0	0	pC
2	0	1	1	pD
2	1	0	1	pE
2	1	1	0	pF
2	1	1	1	pG
3	0	1	1	pAB

Bio-Rad's attempt to read "cumulative" and "intensity" out of the "cumulative intensity signal" is not only directly contrary to the plain language of the claims, it improperly attempts to read limitations into the claims. Bio-Rad invents a new claim term ("probes that contact a given analyte") for claim 1. In claim 1, each hybridization probe corresponds to one of the at least seven polynucleotide analytes, as recited in step (a). Claim 1 does not recite the use of probes (plural) to "contact" a given analyte. Bio-Rad's attempt to rewrite the claims to add new limitations should be rejected. *See Phillips*, 415 F.3d at 1320-23.

4. "cumulative [signal/intensity] measurement" ('051 Claim 1; '170 Claim 1)

Claim Term(s)	Plaintiffs' Proposed Construction	Bio-Rad's Proposed Construction
"cumulative [signal/intensity] measurement"	'051 Patent Claim 1: "measurement of the cumulative intensity signal(s) in the volume" '170 Patent Claim 1: "measurement of the cumulative intensity of the signal(s) in the plurality of droplets"	"the signal or collection of signals from the probes that contact the present analytes"

Bio-Rad improperly attempts to apply its incorrect construction of "cumulative intensity signal(s)" to the term "cumulative intensity measurement" in claim 1 of the '170 Patent and to the term "cumulative signal measurement" in claim 1 of the '051 Patent. Claim 1 of the '051 Patent recites that the "cumulative signal measurement" is "generat[ed]" by "measuring the cumulative intensity signal(s)." As with its misconstruction of "cumulative intensity signal(s)," Bio-Rad's construction of "cumulative signal measurement" and "cumulative intensity measurement" rewrites the terms to delete or ignore both the words "cumulative" and "intensity," and rewrites the claims to add new limitations. Bio-Rad's improper construction should be rejected. *See Phillips*, 415 F.3d at 1320-23, 1327 (improper to read limitations into, or out of, the plain language of the claim). Furthermore, Bio-Rad's construction of "cumulative intensity measurement" should be rejected to the extent Bio-Rad's indefiniteness argument against step (e) of claim 1 of the '170 Patent flows from adopting Bio-Rad's construction. *See infra* Section III.C; *Liebe-Flarsheim Co. v. Medrad, Inc.*, 358 F.3d 898, 911, 914 (Fed. Cir. 2004) (presumption against unnecessary construction of claims in a manner that makes them invalid).

In contrast, the Plaintiffs' proposed construction flows from the claim language itself, consistent with the description of the claimed invention in the specification. In the '051 Patent, the method provides the volume in step (a), excites the probes in step (b), measures the cumulative intensity signal(s) to generate a cumulative signal measurement in step (c), and detects the presence or absence of the analytes in said single sample solution volume as recited in the wherein clause. Accordingly, in claim 1 of the '051 Patent, the "cumulative signal measurement" is a measurement of the cumulative intensity signal(s) in the volume. Similarly, claim 1 of the '170

Patent provides a plurality of droplets in step (c), excites the fluorophores on the probes to generate one or more signal(s) in step (d), measures the signal(s) to generate a cumulative intensity measurement in step (e), and detects the presence or absence of the analytes in step (f). Accordingly, in claim 1 of the '170 Patent, the "cumulative intensity measurement" is a measurement of the cumulative intensity of the signal(s) in the plurality of droplets. In each case, Plaintiffs' construction rejects Bio-Rad's improper attempts to read out the existing limitations of the claims in favor of new and confusing claim limitations. Plaintiffs do so with a plain meaning construction that flows directly from the language of the claims.

Plaintiffs' construction is supported not only by the plain language of the claims, but also by the remainder of the intrinsic evidence. For example, as explained in the Background Section above, the specification details measuring the cumulative intensity signal(s) of the tested volume to non-degenerately detect the presence or absence of the at least five ('170 Patent Claim 1) or at least seven ('051 Patent Claim 1) polynucleotide analytes in the volume in any combination of presence or absence. Using the Table 5 example from the specification, the light signature (cumulative intensity measurement) for the tested sample volume is used to identify the presence or absence of any possible combination of six potential analytes in the volume using a non-degenerate encoding scheme. *See, e.g.*, '051 Patent, 18:34-19:50 & Table 5. The specification specifically describes applying the method where the multiplexing is performed "in a droplet." *See, e.g.*, '051 Patent, 37:16-38:22 ("detect multiple analytes by obtaining a cumulative measurement on a single solution" without requiring separation of the analytes), 38:23-32 (expressly applying the invention to multiplexing in a droplet). Accordingly, the specification supports Plaintiffs' construction that the measurement in claim 1 of the '051 Patent is of the cumulative intensity signal(s) in the volume and that the measurement in claim 1 of the '170 Patent is the cumulative intensity of the signals in each of the droplets.

Consistent with the claim language and the teachings of the specification, the Court should reject Bio-Rad's proposal to (1) eliminate the concepts of "cumulative" and "intensity" from the "cumulative intensity measurement" of claim 1 of the '170 Patent and the "cumulative signal measurement" generated by "measuring the cumulative intensity signal(s)" of claim 1 of the '051

Patent; and (2) replace those express claim requirements with manufactured new ones. *See Phillips*, 415 F.3d at 1320-23, 1327 (improper to rewrite claims contrary to plain meaning to replace recited requirements with new limitations). To the extent the Court construes these measurement limitations, it should adopt Plaintiffs' construction to apply the plain and ordinary meaning of the claim language.

C. Bio-Rad's Erroneous Indefinite Constructions

The challenged phrases in claim 1 of the '170 and '051 Patents should be understood in accordance with their plain and ordinary meaning, and Bio-Rad has not shown by clear and convincing evidence that either one is indefinite. A claim is not indefinite if the claims, read in light of the specification and the prosecution history, inform those skilled in the art about the scope of the invention with reasonable certainty. *Biosig Instruments, Inc. v. Nautilus, Inc.*, 783 F.3d 1374, 1377 (Fed. Cir. 2015). Bio-Rad bears the burden of proving indefiniteness by clear and convincing evidence. *Id.* Here, the plain language of the terms, the claim language as a whole, and the description in the specification and figures support reasonable certainty. *See id.* at 1382-83 (claim language, specification, and figures illustrates a "spaced relationship" was not indefinite); *see also Ironburg Inventions Ltd. v. Valve Corp.*, 64 F.4th 1274, 1285-86 (Fed. Cir. 2023) (claim term "elongate member" not indefinite where patent expressly disclosed an embodiment depicting how "paddles … may constitute elongate members"); *Grace Instrument, Indus., LLC v. Chandler Instruments Co.*, 57 F.4th 1001, 1011-12 (Fed. Cir. 2023) ("enlarged chamber" must be large enough to accomplish the identified function). Bio-Rad's improper attempts to construe the claims to be indefinite should be rejected. *See, e.g.*, *Liebe-Flarsheim*, 358 F.3d at 914 (presumption against unnecessary construction of claims in a manner that makes them invalid).

1. "corresponds to the presence of a unique combination of presence or absence of said at least five polynucleotide analytes in said sample" ('170 Claim 1)

Claim Term(s)	Plaintiffs' Proposed Construction	Bio-Rad's Proposed Construction
"corresponds to the presence of a unique combination of presence or absence of said at least five polynucleotide analytes in said sample"	Plain and ordinary meaning; not indefinite	Indefinite

Step (e) of claim 1 of the '170 Patent recites "measuring said one or more signals to generate a cumulative intensity measurement, wherein said cumulative intensity measurement corresponds to the presence of a unique combination of presence or absence of said at least five polynucleotide analytes in said sample." Applying the plain and ordinary meaning of step (e), this claim element is not indefinite.

The patent specification provides examples where a cumulative intensity measurement corresponds to the presence of a unique combination of presence or absence of said at least five polynucleotide analytes in said sample. As explained in the Background above, Table 5 of the Caltech Asserted Patents provides an example of a nondegenerate encoding scheme for at least five analytes. For contrast, the Caltech Asserted Patents also provided a degenerate encoding scheme in Table 3, and its accompanying decoding matrix in Table 4. The Table 4 decoding matrix lists combinations of the presence or absence of at least five polynucleotide analytes in the sample.

The table below provides the *decoding matrix* for Table 5's nondegenerate encoding scheme, corresponding to how the Caltech Asserted Patents provide the decoding matrix in Table 4 for the degenerate encoding scheme in Table 3. As the decoding matrix for Table 5 illustrates, each row (Combo# 1-32) provides a cumulative intensity measurement ("Cumulative Assay Result") that "corresponds to the presence of a unique combination of presence or absence of said at least five polynucleotide analytes in said sample." For example, in Combo #11, the cumulative intensity 3 1 1 0 (in blue, green, yellow, and red, respectively) uniquely correspondence to the presence of analytes p, B, and C, and the absence of any other analytes (A, D, E, F, G).

Decoding Matrix for Encoding Method Presented in Table 5					
	Cumulative Assay Result				
Combo #	Blue	Green	Yellow	Red	Analyte(s)
1	1	0	0	0	p
2	2	0	0	1	pA
3	2	0	1	0	pB
4	2	1	0	0	pC
5	2	1	0	1	pE
6	2	1	1	1	pG
7	3	0	1	1	pAB
8	3	1	0	1	pAC
9	3	1	0	2	pAE
10	3	1	1	2	pAG
11	3	1	1	0	pBC
12	3	1	1	1	pBE
13	3	1	2	1	pBG
14	3	2	0	1	pCE
15	3	2	1	1	pCG
16	3	2	1	2	pEG
17	4	1	1	1	pABC
18	4	1	1	2	pABE
19	4	1	2	2	pABG
20	4	2	0	2	pACE
21	4	2	1	2	pACG
22	4	2	1	3	pAEG
23	4	2	1	1	pBCE
24	4	2	2	1	pBCG
25	4	2	2	2	pBEG
26	4	3	1	2	pCEG
27	5	2	1	2	pABCE
28	5	2	2	2	pABCG
29	5	2	2	3	pABEG
30	5	3	1	3	pACEG
31	5	3	2	2	pBCEG
32	6	3	2	3	pABCEG

In the table above, the analytes Herpes Simplex (A), Plasmodium (B), HIV (C), Mycobacterium (E), and Dengue Virus (G)) exemplify "said at least five polynucleotide analytes in said sample" for which each cumulative intensity measurement corresponds to the presence of a unique combination of presence or absence of those analytes.

In the ’170 Patent claims, the sample is partitioned into a plurality of droplets (step (c)), after which the at least one fluorophore is excited to generate one or more signals if one or more of said at least five polynucleotide analytes is present (step (d)), so that the cumulative intensity measurement can be obtained. The ’170 Patent claims are thus directed to multiplexed detection “in a droplet.” *See, e.g.*, ’051 Patent, 37:16-38:32. As recited in claim 1 of the ’170 Patent, based on a cumulative intensity measurement that corresponds to the presence of a unique combination of presence or absence of the least five polynucleotide analytes (illustrated in each row of the table above), it can be uniquely determined whether each of said five polynucleotide analytes is present, in any combination of presence or absence. Accordingly, a person of ordinary skill in the art would understand the meaning of this claim element based on the plain language of the claim and the supporting description provided in the specification.

Indeed, Bio-Rad’s own expert recently testified under oath regarding the ’170 Patent that “each claim term can be easily understood by the skilled artisan without further construction,” and that his prior art analysis “was based on the plain and ordinary meaning of the claim terms, unless otherwise indicated.” *See* Tuttle Decl., Ex. D (IPR2024-01178, Ex. 1002), ¶ 20. Where he applied a party’s construction of a term, he did so because he concluded the construction was “reasonable.” *Id.* ¶¶ 125, 127. Rather than testifying that a person of ordinary skill in the art would have lacked reasonable certainty as to the meaning of any aspect of the measuring step (e) of claim 1 of the ’170 Patent, Bio-Rad’s expert analyzed the claim step without expressing any concern that a person of ordinary skill in the art lacked reasonable certainty as to its meaning. *Id.* ¶¶ 176-188. Bio-Rad’s expert also pointed to a reference detecting signal(s) for two analytes on a droplet-by-droplet basis to satisfy the measuring step (e). *Id.* ¶¶ 178-181. Bio-Rad’s expert testified that “said cumulative intensity measurement corresponds to the presence or absence of a unique combination of presence or absence of said at least five polynucleotide analytes in said sample” is a result of analyzing the claimed “at least five” polynucleotides using the components in the providing (a), forming a mixture (b), and partitioning (c) steps of the method that he discussed above. *Id.* ¶¶ 182-183. Bio-Rad’s expert argued an assay satisfied this element if it was “non-degenerate by design” and involved “selecting intensity values for labels such that the combined intensity for each color

for any combination of targets is 'separated by intensity' so that it can be uniquely mapped to the combination of targets." *Id.* ¶¶ 185-187. Bio-Rad's attempt to construe this claim term as indefinite is thus contradicted by the testimony of ***Bio-Rad's*** own expert. For this additional reason, Bio-Rad's indefinite construction should be rejected.

2. "providing a sample solution volume … comprising at least seven hybridization probes" and "contacting …" ('051 Claim 1)

Claim Term(s)	Plaintiffs' Proposed Construction	Bio-Rad's Proposed Construction
"providing a sample solution volume . . . comprising at least seven hybridization probes" and "contacting . . ."	Plain and ordinary meaning; not indefinite	Indefinite

Step (a) of claim 1 of the '051 Patent requires providing a sample solution volume potentially comprising at least one of at least seven polynucleotide analytes and also comprising at least seven hybridization probes. Each hybridization probe corresponds to one of the at least seven polynucleotide analytes and comprises at least one fluorophore selected from four fluorophores. Each hybridization probe generates a cumulative intensity signal when contacted with its corresponding polynucleotide analyte and excited. The cumulative intensity signal comprises at least one signal generated by excitement of at least one of the four fluorophores. As illustrated by dependent claim 4, said cumulative intensity signal(s) may be generated during a polymerase chain reaction (PCR). In step (c), the "sample solution with the plurality of hybridization probes" that was provided in step (a) is "contacted" and the probes known to be present therein are "excited" to generate the cumulative intensity signal(s) if one or more of the at least seven polynucleotide analytes is present in the sample volume. In other words, "contacting said sample solution" means that the trigger (e.g., PCR amplification) for contacting the probe with its corresponding analyte (if present) is performed so that exciting the probe can generate its cumulative intensity signal. Because the sample solution volume only "potentially" comprises at least one of the at least seven analytes, the object of the verb "contacting" is "said sample solution volume" that is known to be present (from providing step (a)) rather than the analytes that are only

potentially present. The language of the claims is thus understood with reasonable certainty according to its plain and ordinary meaning.

The specification supports the plain and ordinary meaning of the claim, as outlined above, and confirms that the claim is not indefinite. For example, the specification illustrates the use of hybridization probes to generate a cumulative intensity measurement for multiplex analyte detection in a single sample solution volume using PCR. For example, the specification describes, a TAQMAN probe, which is an oligonucleotide hybridization probe that has: (1) an analyte-specific component that binds a targeted polynucleotide sequence; (2) a fluorophore that emits a fluorescent signal upon excitation by a light source (e.g., laser); and (3) a quencher that quenches the fluorescence emitted by the fluorophore before the probe hybridizes (attaches) to its target analyte. ’051 Patent, 33:32-42, 34:13-35, 47:30-45. The probe hybridizes to the targeted sequence during PCR amplification if the targeted sequence is present in the sample volume. *Id.* Hybridization of the probe to the targeted sequence subjects the probe to DNA polymerase exonuclease activity that degrades the probe, releasing the fluorophore and displacing the quencher from the fluorophore, so that the fluorophore indicates the presence of the targeted sequence by emitting its fluorescent signal(s) upon excitation. *Id.* If the targeted analyte is not present in the analyzed sample volume, the probe will not hybridize to the targeted analyte, the fluorophore and quencher remain in close proximity, and little or no fluorescent signal is detected. *Id.* The specification thus confirms that the claim phrase “contacting said sample solution volume” means that the trigger (e.g., PCR amplification) for contacting the probe with its corresponding analyte (if present) is performed so that exciting the probe can generate its cumulative intensity signal. Accordingly, a person of ordinary skill in the art would have had reasonable certainty as to the meaning of this claim element based on the plain language of the claim and the supporting description provided in the specification.

Indeed, Bio-Rad’s own expert recently testified under oath regarding the ’051 Patent that “each claim term can be easily understood by the skilled artisan without further construction” and “based on the plain and ordinary meaning of the claim terms.” *See* Tuttle Decl., Ex. A (IPR2024-01177, Ex. 1002) ¶ 19. Rather than testifying that a person of ordinary skill in the art would lack

reasonable certainty as to the meaning of any aspect of the providing step (a) or the contacting step (b) of claim 1 of the '170 Patent, Bio-Rad's expert analyzed the claim steps without expressing any concern that a person of ordinary skill in the art would have lacked reasonable certainty as to its meaning. *Id.* ¶¶ 146-189. Bio-Rad's attempt to construe this claim term as indefinite is thus contradicted by the testimony of ***Bio-Rad's*** own expert, and should be rejected for that additional reason.

D. Bio-Rad's Degeneracy Constructions

1. "non-degenerately," "degenerate" or "degeneracy" ('051 Claim 1; '921 Claims 4, 13, 14)

Claim Term(s)	Plaintiffs' Proposed Construction	Bio-Rad's Proposed Construction
"non-degenerately," "degenerate" or "degeneracy"	For "degenerate" and "degeneracy": "degenerate" and "degeneracy" generally describe a situation where a legitimate result is not definitive, because it can indicate more than one possibility in terms of the presence or absence of an analyte.	"degenerate" or "degeneracy" means a situation where a legitimate result is not definitive, because it can indicate more than one possibility in terms of the presence or absence of an analyte

The specification states: "The terms 'degenerate' and 'degeneracy,' as used herein, generally describe a situation where a legitimate result is not definitive, because it can indicate more than one possibility in terms of the presence or absence of an analyte." '051 Patent, 17:62-65. Plaintiffs agree that this language provides a useful jury instruction with respect to the terms "degenerate" and "degeneracy." *See* Standing Order for Patent Cases (Davila, J.), III.A ("proposed constructions should be suitable for incorporation in a jury instruction."). But Plaintiffs part ways with Bio-Rad in two respects.

First, this language in the specification on its face purports only to say what situations the terms "degenerate" and "degeneracy" generally ***describe***. It does not purport to offer a precise or strict definition of those terms that can be substituted literally into a claim. Nor could it with a single phrase, when one of those terms is an adjective while the other is a noun. This is further reinforced at other places in the specification where, by way of comparison, the patent uses the phrase "the term [X], as used herein, [generally] *refers to* …" when introducing a definition. *See, e.g.*, '051 Patent, 10:4-11:15 (under the heading "Definitions"); *see also, e.g.*, *Medicines Co. v.*

Mylan, Inc., 853 F.3d 1296, 1306 (Fed. Cir. 2017) (where patent has a definitions section that explicitly defines terms using a "linguistic formula" such as "refers to," then elsewhere addresses a term using different "format," that language "lacks the clear expression of intent necessary for a patentee to act as its own lexicographer"); *Am. Med. Sys., Inc. v. Biolitec, Inc.*, 618 F.3d 1354, 1361 (Fed. Cir. 2010) ("use of the words 'based upon,' rather than 'means' or 'is,' undermined the suggestion that the term [] is used as a definition or limitation"; the sentence instead "is better understood as a description of the overall process"). Thus, Plaintiffs disagree with Bio-Rad's proposal that the jury be told that this language from the specification strictly sets out what each of "degenerate" and "degeneracy" literally "means."

Second, Plaintiffs disagree that the jury should be told that this language also defines the term "non-degenerately." That is a different term in at least two important respects: it is the ***negative*** of "degenerately," and "degenerately" itself is an adverb as opposed to an adjective or noun. Telling the jury that a description of the adjective "degenerate" or the noun "degeneracy" also provides a definition of an adverb related to the ***opposite*** concept is likely to create confusion. Informed of what the terms "degenerate" and "degeneracy" generally describe, the jury should be able to understand the plain and ordinary meaning of what it means to do something non-degenerately.

IV. CONCLUSION

Bio-Rad's proposed constructions should be rejected. The plain and ordinary meaning of the claims should be adopted, as explained in this brief.

Dated: July 19, 2024

WILSON SONSINI GOODRICH & ROSATI
Professional Corporation

By: */s/ Amy H. Candido*

Amy H. Candido
Eric P. Tuttle

Attorneys for Plaintiff and Counter-Defendant ChromaCode, Inc.

Dated: July 19, 2024

SHEPPARD, MULLIN, RICHTER & HAMPTON, LLP

By: */s/ Jesse A. Salen*
Jesse A. Salen

Attorneys for Plaintiffs and Counter-Defendants ChromaCode, Inc. and California Institute of Technology

FILERS ATTESTATION

I, Amy H. Candido, attest that all other signatories listed, and on whose behalf the filing is submitted, concur in the filing's content and have authorized the filing.

Dated: July 19, 2024

By: */s/ Amy H. Candido*
Amy H. Candido

WILSON SONSINI GOODRICH & ROSATI, P.C.
AMY H. CANDIDO, SBN 237829
(acandido@wsgr.com)
CHRISTOPHER D. MAYS, SBN 266510
(cmays@wsgr.com)
SACHLI BALAZADEH-NAYERI, SBN 341885
(snayeri@wsgr.com)
One Market Plaza
Spear Tower, Suite 3300
San Francisco, CA 94105-1126
Telephone: (415) 947-2000

ERIC P. TUTTLE, SBN 248440
(eric.tuttle@wsgr.com)
ARIEL C. GREEN ANABA, SBN 304780
(aanaba@wsgr.com)
LISA D. ZANG, SBN 294493
(lzang@wsgr.com)
953 East Third Street, Suite 100
Los Angeles, CA 90071
Telephone: (323) 210-2900

Attorneys for Plaintiff and
Counter-Defendant ChromaCode, Inc.

UNITED STATES DISTRICT COURT

NORTHERN DISTRICT OF CALIFORNIA

SAN JOSE DIVISION

CHROMACODE, INC., AND CALIFORNIA INSTITUTE OF TECHNOLOGY, Plaintiffs and Counter-Defendants, v. BIO-RAD LABORATORIES, INC., Defendant and Counter-Plaintiff.	Case No. 5:23-cv-006360-EJD **DECLARATION OF ERIC P. TUTTLE IN SUPPORT OF PLAINTIFFS AND COUNTER-DEFENDANTS CHROMACODE, INC. AND CALIFORNIA INSTITUTE OF TECHNOLOGY'S OPENING CLAIM CONSTRUCTION BRIEF**

I, Eric P. Tuttle, declare as follows:

1. I am a partner with the law firm Wilson Sonsini Goodrich & Rosati P.C., counsel of record for Plaintiff and Counter-Defendant ChromaCode, Inc. ("ChromaCode") in the above captioned matter. I submit this declaration in support of the Plaintiffs and Counter-Defendants ChromaCode, Inc. and California Institute of Technology's Opening Claim Construction Brief. I have personal knowledge of the facts stated herein, and if called as a witness I could and would testify competently thereto.

2. Attached hereto as **Exhibit A** is a true and correct copy of excerpts of the Declaration of Carl A. Batt, Ph.D. in Support of Petitioner Bio-Rad Labs., Inc. for Inter Partes Review of U.S. Patent No. 10,068,051, Exhibit 1002 to IPR No. 2024-01177.

3. Attached hereto as **Exhibit B** is a true and correct copy of the May 2, 2017 Amendment and Response to Final Office Action from the file history of U.S. Patent No. 10,068,051 (signed on May 1, 2017).

4. Attached hereto as **Exhibit C** is a true and correct copy of the November 6, 2017 Response to Final Office Action and Request for Continued Examination from the file history of U.S. Patent No. 10,068,051.

5. Attached hereto as **Exhibit D** is a true and correct copy of excerpts of the Declaration of Carl A. Batt, Ph.D. in Support of Petitioner Bio-Rad Labs., Inc. for Inter Partes Review of U.S. Patent No. 10,770,170, Exhibit 1002 to IPR No. 2024-01178.

I declare under penalty of perjury of the laws of the United States that the foregoing is true and correct.

Dated: July 19, 2024

/s/ Eric P. Tuttle
Eric P. Tuttle

FILER'S ATTESTATION

I, Amy H. Candido, attest that Eric P. Tuttle concurs in the filing's content and has authorized the filing.

Dated: July 19, 2024

s/ Amy H. Candido
Amy H. Candido

EXHIBIT A

UNITED STATES PATENT AND TRADEMARK OFFICE

BEFORE THE PATENT TRIAL AND APPEAL BOARD

BIO-RAD LABORATORIES, INC.,
Petitioner,

v.

CALIFORNIA INSTITUTE OF TECHNOLOGY,
Patent Owner

IPR 2024-_____
U.S. PATENT NO. 10,068,051 B2

DECLARATION OF CARL A. BATT, PH.D. IN SUPPORT
OF PETITIONER FOR *INTER PARTES* REVIEW

Mail Stop "PATENT BOARD"
Patent Trial and Appeal Board
U.S. Patent and Trademark Office
P.O. Box 1450
Alexandria, VA 22313-1450

BIO-RAD EX.1002.001

A. Written Description Support

14. I understand that claims in a U.S. application are only entitled to the benefit of an earlier filing date, such as a foreign priority date or the filing date of a provisional application, if the corresponding application relied on, such as a foreign application or provisional application, contains sufficient written description of the invention and the manner and process of making it to enable an ordinarily skilled artisan to practice the invention claimed in the non-provisional application.

15. I also understand that a patent or patent publication relied on as a reference is similarly only entitled to the priority benefit of an earlier corresponding application if the corresponding application, such as a foreign application or provisional application, contains sufficient written description for at least one claim.

16. Moreover, where a reference application relies on the priority benefit of an earlier corresponding application to establish the reference as prior art, I understand that the particular disclosure or teaching relied on in challenging any claim must have sufficient written description in an earlier-filed application if that earlier-filed application, and its priority benefit, is relied on to establish the applied reference as prior art.

B. Claim Construction

17. I understand that when interpreting the claims of the ’051 patent, I must do so from the perspective of one of ordinary skill in the art at the relevant priority

date. I have not independently determined the priority date to which the ’051 patent is entitled. For purposes of this proceeding, I have been asked to assume that the ’051 patent has a priority date of February 3, 2012, the filing date of provisional application No. 61/594,480, the earliest-filed application to which the ’051 patent claims the benefit of priority. My analysis does not change if the ’051 patent is entitled to an earlier priority date falling after July 20, 2011, the filing date of provisional application No. 61/510,013 that one of the applied references relies on for the benefit of priority and incorporates by reference. Likewise, my analysis does not change if the ’051 patent is entitled to a later priority date.

18. I understand that in determining whether a patent claim under *inter partes* review before the Patent Trial and Appeal Board (PTAB) is unpatentable in view of prior art, the words of the claims of a patent are generally given their ordinary and customary meaning from the perspective of and as interpreted by a POSA at the time of the claimed invention. I also understand that patent claims are construed in light of the claim language, the patent specification (including the drawings), and the prosecution history (including the references cited during the prosecution of the patent). Specifically, it is my understanding that in determining whether a patent claim under *inter partes* review before the PTAB is unpatentable

in view of prior art, the PTAB uses the *Phillips*[1] standard for claim construction used in civil courts, which is to say that the claims must be given the meaning that the terms would have had to a person of ordinary skill in the art at the time of the priority date of the ’051 patent consistent with the specification and file history of the ’051 patent.

19. For this declaration, it is my opinion that each claim term can be easily understood by the skilled artisan without further construction, that is, my analysis is based on the plain and ordinary meaning of the claim terms, unless otherwise indicated. I understand that Petitioner has identified and proposed construction of certain terms in related proceedings. EX1003. To the extent any construction is required, I have been asked to apply claim constructions that are consistent with Patent Owner’s position in related proceedings. I reserve the right, however, to supplement my opinions if Patent Owner proposes any constructions or the Board adopts any claim constructions.

C. Obviousness

20. I understand that a claim is unpatentable under 35 U.S.C. § 103 if the claimed subject matter as a whole would have been obvious to a POSA at the time of the alleged invention, which I have been instructed to treat at present as no earlier

[1] *Phillips v. AWH Corp.*, 415 F.3d 1303, 1313 (Fed. Cir. 2005).

than February 3, 2012, the filing date of provisional application No. 61/594,480, the earliest-filed application to which the ’051 patent claims the benefit of priority.

21. I understand that a POSA provides a reference point from which the prior art and the alleged invention should be viewed. This reference point prevents a person of ordinary skill from using one’s insight or hindsight in deciding whether a claim is obvious. I understand the use of such hindsight is impermissible.

22. I also understand that a claim can be obvious in light of a single reference or a combination of multiple prior art references. I understand that such a combination must meet certain requirements, further described below.

23. I understand that a patent claim composed of several elements is not proved obvious merely by demonstrating that each of its elements was known in the prior art. It has been explained to me that three requirements must be satisfied for a combination of prior art references to render obvious a claimed invention. First, the cited art must teach or suggest all the requirements of the invention as recited in the claims. However, I understand that a claim is obvious if a missing feature would be a natural result of the combination of prior art elements. Second, the cited art, coupled with the knowledge generally available in the art at the time of the invention, must contain some suggestion or incentive that would have motivated the ordinary skilled artisan to modify a reference or to combine references. I understand that the reason to combine prior art references can come from a variety of sources, such as

128. The "computing unit" described by Oh is depicted in Figure 1B above (41) and it is connected to the "detection unit" (30), the "PCR tube" (10), and the heater (20), all connected to a single power supply unit (51). *Id.* ¶¶ 58-63, Fig. 1B.

129. Oh alternatively considers a "host computer" depicted by 50 in Figure 2 (reproduced below) that performs the functions of the computing unit if the computing unit is not included in a given embodiment. *Id.* ¶¶ 66, 71, Fig. 2.

FIG. 2

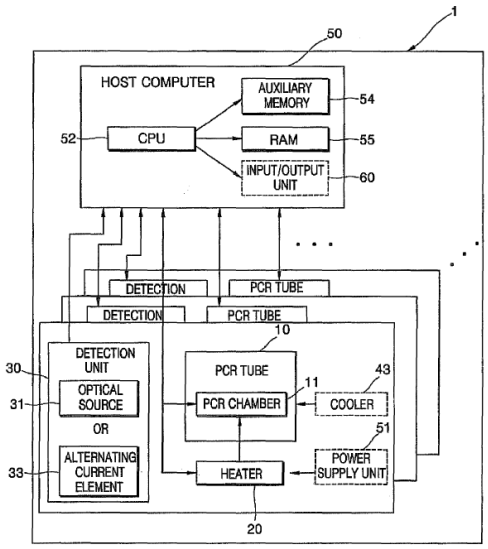

Id. Fig. 2.

IX. CLAIM CONSTRUCTION

130. I do not believe any express claim construction is required to determine the '051 Patent claims are invalid because the prior art teaches and/or discloses the claim limitations under any reasonable construction.

131. In my analysis below, I have applied constructions consistent with those advanced by Petitioner and/or Patent Owner in parallel litigation. *See* EX1003. These terms include the following identified by Petitioner with proposed constructions:

- "degenerate" or "degeneracy": "a situation where a legitimate result is not definitive, because it can indicate more than one possibility in terms of the presence or absence of an analyte." *Id.* at 9; '051 patent, claim 1. Also, conversely, "non-degenerately." EX1003 at 9.
- "each hybridization probe": "each collection of hybridization probes specific for a polynucleotide analyte." *Id.* at 11; '051 patent, claims 1-3.
- "cumulative intensity signal(s)": "the signal or collection of signals from the probes that contact a given analyte." EX1003 at 14; '051 patent, claims 1, 4.
- "cumulative signal measurement": "the signal or collection of signals from the probes that contact the present analytes." EX1003 at 16; '051 patent, claim 1.
- "single sample solution volume" is non-limiting. EX1003 at 19; '051 patent, claim 1.
- "wherein said method non-degenerately detects the presence or absence of the at least seven polynucleotide analytes in said single sample solution volume,

in any combination of presence or absence" is non-limiting. EX1003 at 23; '051 patent, claim 1.

132. Where there are other terms with constructions advanced by Patent Owner in parallel litigation, including apparent interpretations such as those in Patent Owner's infringement contentions (*see generally* EX1012), I have applied constructions consistent with them, as noted below where necessary.

133. I reserve the right to provide express construction(s) later in this proceeding in response to any explicit claim constructions or claim limitations that are contrary to a term's reasonable construction. My opinion may change if I am informed that the Court has construed any claim term in the '051 Patent.

X. GROUND 1: CLAIMS 1-4 WOULD HAVE BEEN OBVIOUS IN VIEW OF SAXONOV AND KRAMER

134. The '051 Patent claims a method of purportedly detecting the presence or absence of at least seven polynucleotide analytes using at least seven hybridization probes that are each labeled with at least one of four fluorophores. EX1001 at claim 1. When a hybridization probe specific for at least one of the seven polynucleotide analytes contacts the analyte in a sample, a color signal is purportedly generated. *Id.* The cumulative signal detected from the sample is purportedly used to determine whether any of the at least seven polynucleotide analytes are present. *Id.*

135. At its core, the ’051 patent relies on nothing more than the concept where the total number of different polynucleotide targets detected exceeds the number of available colors (fluorophores) simply by employing mixed color signals and/or using different signal intensities to provide composite signals that unambiguously identify which analytes are present in a sample. More specifically, the main concept of the ’051 patent’s claims is that four different colors provided by the four different fluorophores can be used with a coding scheme in order that more than four polynucleotide analytes can be detected. Another concept is that the coding scheme must be such that the combination of colors and intensities assigned to each analyte is unambiguous. In other words, the coding scheme unambiguously indicates the presence of specific (targeted) analytes, i.e., it is non-degenerate, because the scheme is such that different combinations of color signals and signal intensities corresponding to different combinations of the polynucleotide analytes can always be resolved without uncertainty as to what analytes are present. As explained below, however, a POSA would have already known about both of these concepts (both alone and in combination) prior to 2012.

136. Saxonov is similar to the ’051 patent, as it is also directed to the multiplex detection of polynucleotide analytes using probes specific for each analyte, including in circumstances where there are more analytes to be detected than the total number of colors used to label probes. For example, Saxonov discloses

2. a) providing a sample solution volume

146. It is my opinion that Saxonov discloses "providing a sample solution volume," as recited in Claim 1. Saxonov discloses that "preparation of the sample may include combining the sample with reagents for amplification." EX1004 ¶ 26; EX1007 at 6:21-23. Saxonov further discloses that sample preparation methods may include "any suitable manipulation of the sample, such as collection, dilution, concentration, purification, lyophilization, freezing, extracting," among others. EX1004 ¶ 25; EX1007 at 6:13-15. In my opinion, a POSA would have understood "any suitable manipulation…such as dilution [or] concentration" of a sample to include the recited claim limitation of "providing a sample solution volume." Figure 1 in Saxonov further shows that the method described includes providing a sample solution volume that contains the analytes and other reagents for the assay. EX1004 Fig. 1, ¶ 25.

147. It is further my opinion, in particular, that Saxonov discloses the preparation of a sample solution into tiny aqueous droplets that may contain small numbers of target polynucleotide(s). EX1004 ¶ 28 ("In some embodiments, the partitions may be droplets disposed in a continuous phase, such that the droplets and the continuous phase collectively form an emulsion."). Such droplets are precisely what Patent Owner contends correspond to the claimed "sample solution volumes" in parallel litigation. *See* EX1012 at 9, 12. Specifically, in that parallel litigation,

Patent Owner has applied a construction such that droplets correspond to the claimed "sample solution volume." *Id.* For example, Patent Owner specifically alleges that "[t]he QX600 system requires dividing each sample into a sample solution volume (e.g., a water-in-oil droplet) with target and background DNA randomly distributed into the droplets and allowing for quantification of at least seven targets in a single well." *Id.* at 12, 89 ("The QX One system requires dividing each sample into a sample solution volume (e.g., a water-in-oil droplet) with target and background DNA randomly distributed into the droplets and allowing for quantification of up to 8 targets in a single well."); *id.* at 9 ("Samples may be further provided using a droplet generator such as the AutoDG or QX200 Droplet Generator."). Thus, Saxonov discloses the preparation of droplets that Patent Owner, in the parallel litigation, currently contends is the claimed "sample solution volume."

148. Accordingly, a POSA would have understood that the types of assays in Saxonov are conducted in solution, wherein aqueous reagents are combined with a sample prior to a detection step. EX1004 ¶ 26; EX1007 at 6:21-23. A POSA would further have understood that the assays in Saxonov involve the detection of analytes in aqueous solutions, i.e., in a sample solution volume.

3. comprising or potentially comprising, at least one of at least seven polynucleotide analytes, and

149. It is my opinion that Saxonov discloses including multiple polynucleotide analytes within the same sample solution volume. At the outset, a POSA would have understood that the use of seven target polynucleotides as claimed in the ’051 patent is not inventive, as it was well known and routine within the relevant art. In my opinion, this is confirmed in the ’051 patent itself, as it never identifies assays including seven target polynucleotides as novel or non-obvious, but rather buries the possibility of seven polynucleotide targets among a range of possible target numbers, including in disclosing that “at least 1.5, 1.6, 1.7, 1.8, 1.9, 2, 3, 4, 5, 6, 7…48, 49, or 50 analytes may be detected per fluorophore.” EX1001 at 12:42-45, 37:44-48. Nonetheless, Saxonov teaches the detection of seven targets and, at a minimum, would have rendered this obvious to a POSA.

150. First, a POSA would have understood that Saxonov teaches multiplexed detection of polynucleotides—that is, the detection of multiple polynucleotides in an assay at the same time. EX1004 ¶ 5 (describing digital PCR to detect “nucleic acid target[s]”); *id.* ¶ 6 (“A digital PCR assay can be multiplexed to permit detect of two or more different targets within each partition.”); *id.* Fig. 10 (depicting signals for detection of three or more analytes); *id.* ¶ 77, Fig. 5; EX1007 at 13:9-13, 15:12-22, 3:6-8, 17:4-10, Fig. 5. Further, Saxonov specifically teaches

the use of forward primers, reverse primers, and oligonucleotide probes that a POSA would have known are used in assays that rely on PCR for amplifying target polynucleotides. EX1004 ¶ 77.

151. Second, a POSA would have understood that Saxonov contemplates not just multiplexed detection, but also multiplexed detection of seven or more targets such that it teaches the analysis of samples with seven or more targets. Specifically, Saxonov teaches detecting multiple targets using different intensities of a single color along with the use of multiple colors. For example, Saxonov teaches "performing a digital assay with multiplexed detection of two or more distinct targets in the same optical channel" including "three or more distinct targets." EX1004 ¶¶ 8, 17. Saxonov also teaches that this "analysis of more than two targets in the same channel" is achieved by using different intensities of the same color. *id.* ¶ 19 (disclosing an assay for the multiplexed detecting of "three or more distinct targets"); *id.* ¶ 20 ("In some embodiments, the assays may involve analysis of more than two targets in the same channel."); *id.* ¶ 36 ("the signal may be a composite signal that represents two, three, four or more targets of the reactions"); *id.* ¶ 47 ("two or more targets in the same channel"); *id.* ¶ 48 ("[o]ther assays may involve three or more targets and three or more probes, where at least two targets are analyzed in the same channel"); *id.* ¶ 62 ("principles described here also may be extended to…two or three

or more [analytes]"); *id.* ¶ 77 ("multiplexed detection of three or more distinct targets"); *id.* ¶¶ 60-67; EX1007 at 5:19-6:3, 10:18-11:3.

152. For example, for two targets, Saxonov teaches that two intensities of the same color results in four possible populations of intensities: droplets with no target, target 1 alone, target 2 alone, and both target 1 and 2. EX1004 ¶¶ 41, 53-59, 63-68, Figs. 4-7. Similarly, for three targets, three different intensities of one color can be used to "generate eight clusters or populations of data, separated by intensity." *Id.* ¶ 20. As detailed in Saxonov, in general, "all permutations of positives will generally fall into 2^N populations or clusters, where N is the number of targets," which is also the number of distinguishable intensities that must be detected. *Id.* ¶ 41.

153. Specifically, Saxonov teaches that two or three targets can be detected with a single color by varying the intensity of assigned to each analyte:

	Target A	Target B	Intensity
Population 4	+	+	Highest
Population 3	+	–	Intermediate
Population 2	–	+	Intermediate
Population 1	–	–	Lowest

	Target A	Target B	Target C	Intensity
Population 8	+	+	+	Highest
Population 7	+	+	–	Intermediate
Population 6	+	–	+	Intermediate
Population 5	–	+	+	Intermediate
Population 4	+	–	–	Intermediate
Population 3	–	+	–	Intermediate
Population 2	–	–	+	Intermediate
Population 1	–	–	–	Lowest

Id. ¶ 41 ("Exemplary results for…two, and three target systems in which data are collected in a single channel are shown in the following tables."); *see also id.* ¶ 20 ("For example, an assay for three targets may generate eight clusters or populations of data, separated by intensity.").

154. As shown in the first table, the different combinations for the presence or absence of two analytes results in four possible intensity signals, as a POSA would understand that the two intermediate intensity signals be selected so as to be distinguishable from each other. Similarly, the second table shows that different combinations of three analytes with a different signal intensity for each results in eight possible intensity signals. Although the tables above do not explicitly assign different intensity levels to the intermediate values, Saxonov teaches to select intensity values in a manner that allows one to distinguish the different possible combinations. *Id.* ¶ 20. Thus, a POSA would have understood that the ordering of the rows depicts a step-wise difference (gradation) in intensity levels such that each level represents a unique intensity level that can be used to determine the

combination of analytes in a sample. For example, Population 4 has a higher intensity than Population 3, which has a higher intensity than Population 2, etc. In order words, a POSA would have understood that what is depicted is an assay in which the different populations can be distinguished, that is, that the intensity represented by each row is different, such that the overall intensity detected can be used to distinguish which analytes are present in the sample. Again, Saxonov teaches that the different intensity levels are "distinguishable" from each other. *Id.* ¶ 41; *see also id.* ¶ 20 ("three targets may generate eight clusters or populations of data, separated by intensity."). Thus, a POSA would have understood that each combination of analytes detected using labels of a single color and of different intensities for each analyte produces a different cumulative intensity signal.

155. Saxonov also teaches the use of at least three colors, wherein multiple analytes are detected with different intensities of each color. This is evident from its teaching throughout, first of using multiple colors and then of using multiple intensities, as discussed above, with each of those multiple colors.

156. Specifically, Saxonov teaches the use of "one channel" plus "one or more other channels," which is an express disclosure of at least three channels or colors. EX1004 Fig. 5, ¶¶ 6, 8, 20 ("some targets may be analyzed in one channel (e.g., a FAM channel), and one or more other targets may be analyzed in one or more other channels (e.g., a VIC channel).").

157. Thus, a POSA would have understood from Saxonov's disclosure of at least three colors ***and*** two or three intensities corresponding to the targeted analytes per color that Saxonov contemplates the analysis of seven or more targets at the same time. For example, three colors and three intensities per color would allow the non-degenerate identification of ***nine*** different analytes:

	Color 1	**Color 2**	**Color 3**
Intensity 1	Analyte 1	Analyte 4	Analyte 7
Intensity 2	Analyte 2	Analyte 5	Analyte 8
Intensity 3	Analyte 3	Analyte 6	Analyte 9

As shown in the table, analytes 1-3 can each be detected with three different intensities of color 1. The presence of 1-3 can be detected because, as taught by Saxonov, eight possible intensity levels allow the unique identification of the combination present. This holds similarly for analytes 4-6 using color 2 and analytes 7-9 using color 3. A POSA would have understood that the intensity of each color is independent of each other.

158. A POSA would have further understood Saxonov's disclosure of "one or more other channels" in addition to a first channel would necessarily also encompass using four colors, and that this would have been wholly consistent with

selecting fluorophores from Saxonov's listing of at least five fluorophores, which states that "[e]xemplary fluorophores that may be suitable include FAM, VIC, ROX, TAMRA, JOE, etc., among others." *Id.* ¶¶ 20, 51.

159. A POSA would also have understood that using four colors is preferable, due to the pre-existing availability of four-color instrumentation, and the lessened requirements to distinguish two different intensities versus three or more. *See infra* Section X.A.5 (discussing more extensively the numbers and selection of different fluorophores). Thus, a POSA would have understood that by using four colors, with two intensities per color, ***eight*** analytes can be unambiguously detected:

	Color 1	**Color 2**	**Color 3**	**Color 4**
Intensity 1	Analyte 1	Analyte 3	Analyte 5	Analyte 7
Intensity 2	Analyte 2	Analyte 4	Analyte 6	Analyte 8

160. A POSA would have understood that resolving two intensities per color is preferable to resolving three intensities per color, which Saxonov expressly discloses in teaching to use an additional color rather than an additional intensity level so that the data is "more easily resolvable." *Id.* ¶ 20. Further, a POSA would have simply known that reducing the number of different intensity signals per color would have necessarily simplified the resolution of different signals. As discussed,

detecting two analytes in one color results in four possible intensity levels, while detecting three analytes in one color results in eight possible intensity levels of that color. Thus, detecting two rather than three analytes with one color results in having to resolve fewer intensity levels. Regardless, both schemes described—three colors at three intensities and four colors at two intensities—allow for the analysis of samples that have at least seven analytes and a POSA would have had a reasonable expectation of success in using either scheme contemplated in Saxonov.

161. Due to the need and the advantages of multiplexing, a POSA would have been motivated to detect more analytes in the same assay, such as detecting at least seven polynucleotide analytes. *Id.* Accordingly, it is my opinion that a POSA would have understood the benefits of a highly multiplexed assay, including one that assays at least seven polynucleotide analytes, and would have been motivated to increase the number of analytes that can multiplexed in one assay.

162. In my opinion, thus, for the reasons above, it would been obvious, in view of Saxonov to detect at least seven polynucleotide analytes in a multiplexed fashion.

4. comprising at least seven hybridization probes, each hybridization probe corresponding to one of the at least seven polynucleotide analytes,

163. It is my opinion that Saxonov discloses a sample solution volume that comprises at least seven hybridization probes, where each hybridization probe

corresponds to the at least seven polynucleotide analytes, that is, each is capable of binding to one of the at least seven polynucleotide analytes, as recited in claim 1.

164. In my opinion, a POSA would have known to use at least as many hybridization probes as different polynucleotide analytes, because one probe is needed for each analyte, as taught by Saxonov and as commonsense dictates.

165. A POSA would have known that there is a specific probe for each polynucleotide analyte. Under techniques commonly known in the art, such as qPCR and dPCR, multiplex assays include at least one probe that specifically binds to each polynucleotide analyte. This is so because the probe must contain sequences that are complementary to a specific sequence in the polynucleotide analyte. In addition, probes specific to each analyte allows the determination of the presence or absence of each of the analytes in a sample. For example, the '051 Patent states that a "traditional encoding method for multiplexed fluorescent assay" involves pairing each analyte with a unique color, thereby requiring a hybridization probe specific to each analyte. EX1001 at 8:40-57. As a further example, a commonly used probe, a TaqMan probe, is "an oligonucleotide probe attached to a fluorophore and a quencher," where the "sequence of the oligonucleotide is designed to be complementary to a polynucleotide sequence present in an analyte, and therefore capable of hybridizing to the polynucleotide sequence present in the analyte." *Id.* at 10:30-37. The probes disclosed in the '051 patent are among those known, or

certainly within categories of those known, in the art. *See id.* at 11:25-27 ("Any suitable probe may be used with the methods presented in this disclosure, so long as the probe generates a quantifiable signal in the presence of an analyte."). Accordingly, a POSA would have known that each hybridization probe contains sequences that are specifically complementary to a targeted polynucleotide analyte, thereby requiring at least one hybridization probe for each analyte.

166. Saxonov also provides ample examples of probes that are each specific for an analyte to be detected. For example, Saxonov discloses using hybridization probes specific for each polynucleotide analyte. EX1004 ¶ 50. As another further example, Saxonov discloses using "corresponding probes 84, 86 ('Probe 1' and 'Probe 2')" specific for "targets 80, 82 ('Target 1' and 'Target 2')." *Id.* ¶ 49, Fig. 3; EX1007 at 13:14-17; *see also* EX1004 ¶¶ 50, 63-67, Fig. 5. Even though there is a specific probe for each analyte, some of the probes may have a fluorophore in common, such as disclosed by Saxonov wherein multiple analytes are encoded using a FAM fluorophore. *See, e.g.*, EX1004 ¶¶ 13, 14, 63-67, Fig. 5; EX1007 at 4:1-7, 17:20-19:9, Fig. 5. As a further sample, Saxonov depicts in Figure 9 a probe specific for each target:

Fig. 9

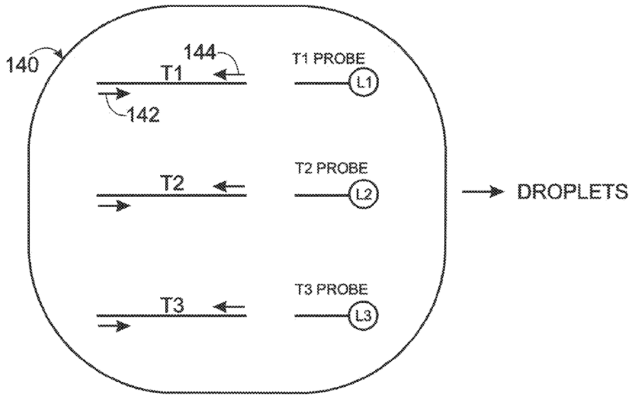

EX1004 Fig. 9; *id.* ¶ 77 (describing "an exemplary bulk phase mixture 140" that "may include a reporter for amplification of each target (such as a T1 probe, a T2 probe, and a T3 probe)"); *id.* ¶ 49 (disclosing "corresponding probes" specific for each target).

167. Thus, as a POSA would have understood that Saxonov discloses, but at a minimum renders obvious, detection of at least seven polynucleotides (*see supra* Section X.A.3), or at a minimum renders such obvious (*id.*), a POSA would likewise have understood that Saxonov teaches using at least seven corresponding hybridization probes.

5. wherein each hybridization probe comprises at least one fluorophore selected from four fluorophores, and

168. It is my opinion that Saxonov discloses using at least seven hybridization probes with each of the probes including at least one of four fluorophores as a label. As I detailed above, using at least seven hybridization

probes that are each labeled with at least one of four fluorophores is sufficient to detect seven targets. *See supra* Sections X.A.3, X.A.4.

169. Saxonov discloses multiple fluorophores suitable for labeling hybridization probes, including FAM, VIC, ROX, TAMRA, and JOE. EX1004 ¶¶ 49, 51, Fig. 3; EX1007 at 14:20-21, 4:20-23. Saxonov also teaches labeling each probe with one or more of these fluorophores, thereby using one or more colors to detect each target. *See, e.g.*, EX1004 ¶ 26 ("The reporters each may be a labeled probe that includes a nucleic acid (e.g., an oligonucleotide) labeled with a luminophore, such as a fluorophore."); *id.* ¶ 20 (describing targets analyzed in one color and additional targets in "one or more other [colors]"); *id.* ¶ 79 (target "detectable in two or more [colors]"); *see also id.* ¶¶ 13, 36, 63-67, 76-78, Figs. 5, 9-10.

170. In my opinion, a POSA would have understood Saxonov's teaching of using "two or more" colors to be a broad disclosure that one can use any one of a range of a different number of fluorophores, including up to four. In particular, it would have been clear to a POSA that Saxonov teaches up using one or more of at least four fluorophores because Saxonov would have just stated "up to three," or something similar, if meant to teach using no more than three fluorophores. Thus, Saxonov does not disclose any limits on the number of fluorophores to be used with each probe.

171. To reiterate, as discussed above, three fluorophores or colors with three distinguishable levels of intensity is sufficient to detect nine polynucleotide analytes. *See supra* Section X.A.3. Meanwhile, four fluorophores or colors with two levels of intensity allows the detection of eight polynucleotide analytes. *See id.*

172. While Saxonov provides a broad disclosure on the range of fluorophores to be used in an assay, a POSA would likely have selected from four fluorophores. Specifically, a POSA would have considered the practical considerations of an available instrument, the number of colors it can detect, and the range of intensities it can reliably detect.

173. It is my opinion that labeling probes with at least one fluorophore selected from four different fluorophores would have been an obvious design choice for a POSA in light of the instruments available at the time. Nowhere does the '051 patent specification suggest that four is a novel or inventive number of fluorophores. Rather, it does just the opposite, as the '051 patent acknowledges that four is the natural number of different fluorophores to select from because this was the number of colors pre-packaged on "instruments widely used in the art:"

> Many real-time PCR and quantitative PCR instruments comprise an excitation light source and band pass filters that enable the detection of fluorescent signals in four colors (e.g., blue, green, yellow, and red). Therefore, the methods of the invention can be readily applied using instruments widely used in the art.

EX1001 at 37:27-32. This limitation of instruments that can only detect four colors alone would have motivated a POSA to label probes with no more than four fluorophores—one for each color. The specification does not suggest that it would be novel or inventive to use the four colors that were available on such "instruments widely used in the art" or that four is a novel or inventive number of fluorophores.

174. Given these considerations, a POSA would have been motivated to use four fluorophores in a multiplexed assay. First, as explained above, detecting two analytes with the same color requires differentiating between four possible intensity levels, rather than eight levels with three analytes per color. *See supra* Section X.A.3. Thus, using four colors with two intensities each to detect eight analytes is more straightforward since it is easier to distinguish four intensity levels (from two analytes) as compared to eight or more (from three or more analytes). Second, a POSA would be motivated to use the widely available instruments, which have four optical channels that can detect four colors. As such, a POSA would further have understood that the claimed use of four fluorophores in hybridization probes is neither inventive nor special and would have been motivated to use four colors. Further, given that "widely used" instruments already employed four colors to detect targets, a POSA would have had a reasonable expectation of being able to successfully use four fluorophores (one associated with each color) for multiplex detection of biological targets. As explained above, when using four colors with

each at two intensities, there are only four resulting clusters or populations of signal data for the possible combinations for each of the colors used that must be distinguished, rather than eight when using three intensities. *See supra* Section X.A.3; EX1004 ¶¶ 20, 41 (explaining that data with all permutations of positives for each color fall into 2^N populations where N is the number of targets); *id.* ¶ 60-67. A POSA would have understood that it is easier to use systems to detect signals and measure analytes when there are fewer different possible combinations for each color that is used. It is my opinion, accordingly, that a POSA would have been motivated to use four colors rather than three for the benefit of more straightforward distinction among the clusters or populations of data for each color used.

6. wherein each hybridization probe, when excited and when contacted with its corresponding polynucleotide analyte, generates a cumulative intensity signal,

175. It is my opinion that Saxonov discloses the excitation of each hybridization probe when contacted with its corresponding polynucleotide analyte to generate a cumulative intensity signal, as recited in claim 1.

176. Saxonov discloses that each hybridization probe, when excited and when contacted with its corresponding polynucleotide analyte, generates a cumulative intensity signal. *Id.* ¶¶ 49-52. For instance, Saxonov discloses hybridization probes that hybridize to their corresponding polynucleotide analyte targets and that include fluorescent labels detectable upon excitation:

Fig. 3

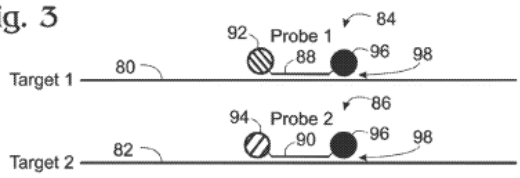

Id. Fig. 3. Specifically, Saxonov teaches that "light detected from the fluorophore may increase when the associated oligonucleotide 88 or 90 binds to the amplified target…or when the probe is cleaved and the fluorophore and quencher become uncoupled during target amplification, among others." *Id.* ¶ 52; *see also id.* ¶ 37. Moreover, the probes in Figure 3 of Saxonov wherein "the probe is cleaved" are the same types of probes, essentially TaqMan probes, that Patent Owner accuses of infringing in parallel litigation. *See* EX1012.

177. Saxonov discloses numerous examples of signals generated from excitation of fluorophores present in droplets. For example, Figure 5 depicts the FAM signal from droplets with C61+, RPP30+, or both:

Fig. 5

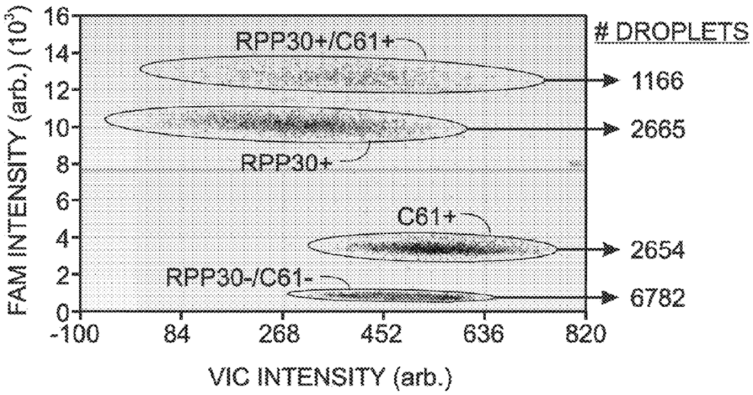

EX1004 Fig. 5; *id.* ¶¶ 63-67, Fig. 5; EX1007 at 17:4-19:9, 18:5-21; 5:19-3. A POSA would have understood that a signal generated using a probe comprising fluorophores would include at least one color signal generated by exciting at least one fluorophore. Specifically, as would have been and is well known by a POSA, fluorophores are excited in order to generate, i.e., emit, a detectable light signal. A POSA would understand that this is how fluorescent probes are used in qPCR and dPCR. *See supra* Section V. Further, for example, Saxonov specifically teaches using optical channels to detect emitted light signals that are generated upon excitation of fluorophores. EX1004 ¶ 37.

178. Saxonov also teaches that light emitted from different probes that use the same fluorophore may be detected together in a cumulative fashion, thereby detecting a cumulative intensity signal. *Id.* ¶ 37 ("The light detected in a given channel may be detected with the same sensor at the same time such that light detected from different reporters is summed or accumulated without attribution to a particular reporter. Thus, the signal may be a composite signal that represents two, three, four, or more reactions and thus two, three, four, or more targets of the reactions."). Thus, the cumulative intensity signals generated in the assays taught by Saxonov are a result of exciting at least one of the fluorophores employed by the assay.

179. Saxonov provides multiple examples of cumulative intensity signal generation as a result of fluorophore excitation. For example, Figure 5 depicts assay results for detecting two target polynucleotides, C61 and RPP30. EX1004 ¶¶ 13, 63-67, Fig. 5; EX1007 9:5-21. First, droplets positive for analyte "C61" have a generated cumulative intensity in the FAM channel of ~3,000 in arbitrary units and a negligible VIC intensity. *Id.* Second, droplets containing analyte "RPP30" have a generated cumulative intensity of ~10,000 in the FAM channel in arbitrary units with a negligible VIC intensity. *Id.* Finally, droplets containing both "RPP30" and "C61" exhibit a generated cumulative intensity of ~13,000 in the FAM channel in arbitrary units and a negligible intensity in the VIC channel. *Id.*

7. further wherein each generated cumulative intensity signal comprises at least one signal generated by excitement of at least one of the four fluorophores;

180. It is my opinion that Saxonov discloses generating a cumulative intensity signal that includes at least one signal generate by excitement of at least of four fluorophores, as recited in claim 1.

181. Saxonov discloses that each generated cumulative intensity signal comprises signal generated by exciting at least one fluorophore label of the hybridization probes. EX1004 ¶ 37. For example, each positive droplet (C61+, RPP30+, and RPP30+/C61+) in Figure 5 includes signal from the FAM fluorophore label. EX1004 ¶¶ 63-67, Fig. 5; EX1007 at 17:4-19:9, 18:5-21; 5:19-3.

182. In my opinion, a POSA would have understood that signals from fluorescent probes, such as TaqMan probes, are generated by excitation of the fluorophores attached to the hybridization probes, as that is how such probes are understood to function and have been commonly used in the field, including techniques such as qPCR and dPCR. *See supra* ¶ Section V.C.

183. Saxonov discloses the exact type of fluorophore-labeled hybridization probes specific for target polynucleotide analytes that Patent Owner contends infringe the claims. *See, e.g.*, EX1013. A POSA would have understood that the signals from these fluorophores that are included in the hybridization probes are generated by excitation and that they lead to the claimed cumulative intensity signals.

184. Likewise, Saxonov teaches generating cumulative intensity signals comprising signals from the different fluorophores used to label the sequence-specific hybridization probes for the same target. Figure 10, for instance, illustrates results for an assay and shows cumulative intensity signals comprising signals from two different fluorophores used to label sequence-specific probes for three different targets. EX1004 ¶¶ 77, 79, Fig. 10; EX1007 at 2:15-3:3, 3:15-4:15, 9:4-10:3. The cumulative signal for analyte 1 is detectable in one color, the cumulative signal for analyte 2 in a second color, and the cumulative signal for analyte 3 in both colors. EX1004 ¶ 79, Fig. 10.

185. A POSA would have understood, thus, that a cumulative intensity signal generated using a probe comprising fluorophores would include at least one color signal generated by excitement of at least one fluorophore of the four fluorophores.

8. b) contacting said sample solution volume with the plurality of hybridization probes and

186. It is my opinion that Saxonov discloses contacting the sample solution volume with the plurality of hybridization probes in disclosing a sample having a volume comprising polynucleotide analytes and probes that hybridize to them. EX1004 ¶¶ 17-18, 77, Fig. 9; EX1007 at 6:21-7:10, 12:21-13:8.

187. As previously discussed, Saxonov teaches contacting analytes in the sample solution volume with hybridization probes. *See supra* Sections X.A.2-X.A.4.

188. Further, Patent Owner accuses Petitioner of infringing claim 1 wherein the sample solution is contacted with the various hybridization probes through the process described above for providing the sample solution. EX1012 at 28-42. Specifically, in parallel litigation, Patent Owner contends that the contacting step is met by pointing to steps of the probes hybridizing to the analytes and being excited. *See id.* at 28-42 ("When the process described above is performed using a QX600, the sample solution described above in step 1a will be contacted with the various

hybridization probes and excited through the process described in Steps 1a.4 and 1a.5.”).

189. Here, as explained above, Saxonov likewise teaches hybridizing probes to their targets and exciting the probes to generate a signal. *See supra* Sections X.A.6-X.A.7. Accordingly, Saxonov teaches contacting the sample solution with the plurality of hybridization probes.

9. exciting the hybridization probes to generate the cumulative intensity signal(s) if one or more of the at least seven polynucleotide analytes is present in the sample volume; and

190. It is my opinion that Saxonov discloses exciting labels of hybridization probes to generate cumulative intensity signal(s) if one or more polynucleotide analytes are present in the sample, as recited in claim 1, thus, signaling the presence of polynucleotide analytes in the sample volume. EX1004 ¶¶ 5, 20, 37, 79, Figs. 4-8, 10; EX1007 at 12:21-13:8.

191. As discussed previously, Saxonov discloses generating cumulative intensity signals from fluorophores on probes that are excited to emit a signal if the corresponding polynucleotide analyte is present. *See supra* Section X.A.6.

192. A POSA would have further understood from Saxonov that hybridization probes for unambiguous detection of at least seven polynucleotide analytes, as discussed above in Sections X.A.3 to X.A.7, would generate cumulative

DECLARATION

I declare that all statements made herein of my own knowledge are true and that all statements made on information and belief are believed to be true; and further that these statements were made with the knowledge that willful false statements and the like so made are punishable by fine or imprisonment, or both, under Section 1001 of Title 18 of the United States Code.

Dated: July 15, 2024 By: Carl Batt

EXHIBIT B

Electronically Filed on: May 2, 2017

PATENT
Attorney Docket No.: 38075-716.301

IN THE UNITED STATES PATENT AND TRADEMARK OFFICE

In re application of:	Confirmation No.: 1065
Inventor(s): Kartalov, Emil P., et al.	Examiner: Russell Scott Negin
Application No.: 14/451,876	Art Unit: 1631
Filed: August 5, 2014	Customer No.: 21971
For: SIGNAL ENCODING AND DECODING IN MULTIPLEXED BIOCHEMICAL ASSAYS	

Mail Stop Amendment
Commissioner for Patents
P.O. Box 1450
Alexandria, VA 22313-1450

AMENDMENT AND RESPONSE TO OFFICE ACTION

Dear Sir:

This communication is in response to the Non-Final Office Action mailed November 23, 2016. The shortened statutory time period to reply expired on March 23, 2017. Applicants submit this response before May 23, 2017 along with a petition for a two-month time extension and all applicable fees. Applicants believe that this response is timely filed.

Applicants respectfully request reconsideration of the above-referenced patent application in view of the following amendment and remarks.

Amendments to Claims begin on page 2 of this paper.

Remarks begin on page 8 of this paper.

Amendments to the Claims:

This listing of claims will replace all prior versions, and listings, of claims in this application. The following amendments do not constitute an admission regarding the patentability of the amended subject matter and should not be so construed. Applicants reserve the right to pursue the subject matter of the canceled claims in this or any other appropriate patent application. Further, none of Applicants' amendments are to be construed as dedicating any such subject matter to the public, and Applicants reserve all rights to pursue any such subject matter in this or a related patent application.

Listing of claims:

1. **(Withdrawn)** An assay that is capable of unambiguously detecting the presence or absence of each of at least seven (7) analytes, in any combination of presence or absence, in a single sample volume without immobilization of said analytes, physical separation of said analytes, melting curve analysis, or mass spectrometry.
2. **(Withdrawn)** The assay of claim 1, wherein each of said analytes is encoded as a value of one component of a signal.
3. **(Canceled)**
4. **(Withdrawn)** The assay of claim 2, wherein each of said analytes is encoded as at least one first value in a first component of said signal and at least one second value in a second component of said signal.
5. **(Withdrawn)** The assay of claim 2, wherein each of said analytes is encoded as a first value in a first component of said signal at each of a plurality of second values in a second component of said signal.

6.-8. **(Canceled)**

9. **(Withdrawn)** The assay of claim 4, wherein said first value is an intensity or range of intensities and said second value is a wavelength or range of wavelengths.

10.-12. **(Canceled)**

13. **(Withdrawn)** The assay of claim 2, wherein said signal is an electromagnetic signal.

14.-16. **(Canceled)**

17. **(Withdrawn)** The assay of claim 1, wherein said detecting is performed with reagents comprising hybridization probes.

18. **(Withdrawn)** The assay of claim 1, wherein said detecting is performed with a plurality of hybridization probes, comprising an identical fluorophore, wherein said plurality of hybridization probes are specific for different analytes.

19. **(Withdrawn)** The assay of claim 1, wherein said detecting is performed with a plurality of hybridization probes comprising different fluorophores, wherein said plurality of hybridization probes are specific for different analytes.

20.-21. **(Canceled)**

22. **(Withdrawn)** The assay of claim 2, wherein said signal is generated during a polymerase chain reaction.

23.-26. **(Canceled)**

27. **(Withdrawn)** The assay of claim 4, further comprising constructing a diagram.

28. **(Withdrawn)** The assay of claim 27, wherein said diagram is constructed by plotting possible combinations of said first values and said second values for positive control samples.

29. **(Withdrawn)** The assay of claim 1, wherein at least one of said analytes comprises a polynucleotide.

30.-33. **(Canceled)**

34. **(Withdrawn)** The assay of claim 1, further comprising transmitting information concerning the presence or absence of said analyte through a computer network.

35. **(Withdrawn)** The assay of claim 1, further comprising providing information concerning the presence or absence of said analyte to a health care professional, wherein the health care professional makes a clinical decision based on said information.

36. **(Canceled)**

37. **(Withdrawn)** The assay of claim 1, wherein at least one step of said assay is performed using a computer.

38. **(Withdrawn)** The assay of claim 37, wherein said computer is located on a remote server.

39. **(Withdrawn)** The assay of claim 37, wherein said computer is located on a thermal cycler.

40.-41. **(Canceled)**

42. **(Withdrawn)** The assay of claim 2, wherein said coding is innately non-degenerate.

43. **(Withdrawn)** The assay of claim 42, wherein said coding is designed to be non-degenerate by enumerating legitimate results that can be obtained from said encoding, identifying legitimate results that are degenerate, and eliminating at least one potential analyte code from said encoding to eliminate degeneracy.

44. **(Canceled)**

45. **(Withdrawn)** The assay of claim 1, wherein said assay is an end-point assay.

46. **(Canceled)**

47. **(Withdrawn)** The assay of claim 1, wherein said assay is a liquid phase assay.

48. **(Canceled)**

49. **(Currently Amended)** A method of detecting the presence or absence of each analyte of a plurality of analytes, comprising:

    a. encoding each of said analytes as a first value of a signal, thereby generating a coding scheme, wherein each of said analytes is represented in said coding scheme by <u>one of</u> said first value<u>s</u>, wherein said encoding is performed in a manner that reduces or eliminates degeneracy;

    b. providing a sample comprising, or potentially comprising, at least one of said analytes;

    c. contacting said sample with analyte-specific reagents that generate said first value<u>s</u>, as represented in said coding scheme, when each of said analytes is present;

    d. cumulatively measuring said first values of said signal within said sample, thereby providing a cumulative measurement; and

    e. determining whether each of said analytes is present or absent based on said cumulative measurement and said coding scheme;

wherein said method ~~is capable of~~ non-degenerately detects~~ing~~ the presence or absence of at least seven analytes in a single sample volume, in any combination of presence or absence, without immobilization of said analytes, physical separation of said analytes, or mass spectometry.

50. **(Canceled)**

51. **(Original)** The method of claim 49, wherein said first value is an intensity or range of intensities.

52. **(Canceled)**

53. **(Previously Presented)** The method of claim 49, wherein said first value is incremented in said coding scheme to an amount greater than the sum of said preceding first values.

54. **(Canceled)**

55. **(Currently Amended)** A method of detecting the presence or absence of each analyte of a plurality of analytes, comprising:

a. encoding each of said analytes as at least one first value and at least one second value, wherein said first value is a value from a first component of a signal and said second value is a value from a second component of said signal, thereby generating a coding scheme, wherein each of said analytes is represented in said coding scheme by said at least one first value and said at least one second value, wherein said encoding is performed in a manner that reduces or eliminates degeneracy;

b. providing a sample comprising, or potentially comprising, at least one of said analytes;

c. contacting said sample with analyte-specific reagents that generate said at least one first value and at least one said second value, as represented in said coding scheme, when each of said analytes is present;

d. cumulatively measuring said first values and said second values within said sample, thereby providing a cumulative measurement; and

e. determining whether each of said analytes is present or absent based on said cumulative measurement and said coding scheme,

wherein~~, when degeneracy is eliminated,~~ said method ~~is capable of~~, without immobilization of said analytes, physical separation of said analytes, or mass

spectrometry, non-degenerately detects~~ing~~ the presence or absence of each of at least six said analytes in a single sample volume, in any combination of presence or absence, when each of said reagents generates only one second value.

56. **(Original)** The method of claim 55, wherein each of said analytes is encoded as a first value in a first component of said signal at each of a plurality of second values in a second component of said signal.

57.-74. **(Canceled)**

75. **(Previously Presented)** The method of claim 49, wherein each of said analytes is encoded as said first value of one component of said signal.

76. **(Previously Presented)** The method of claim 75, wherein each of said analytes is encoded as at least one first value in said first component of said signal and at least one second value in a second component of said signal.

77. **(Previously Presented)** The method of claim 75, wherein each of said analytes is encoded as said first value in a first component of said signal at each of a plurality of second values in a second component of said signal.

78. **(Previously Presented)** The method of claim 76, wherein said first value is an intensity or range of intensities and said second value is a wavelength or range of wavelengths.

79. **(Previously Presented)** The method of claim 49, wherein said signal is an electromagnetic signal.

80. **(Previously Presented)** The method of claim 49, wherein said detecting is performed with reagents comprising hybridization probes.

81. **(Previously Presented)** The method of claim 49, wherein said detecting is performed with a plurality of hybridization probes, comprising an identical fluorophore, wherein said plurality of hybridization probes are specific for different analytes.

82. **(Previously Presented)** The method of claim 49, wherein said detecting is performed with a plurality of hybridization probes comprising different fluorophores, wherein said plurality of hybridization probes are specific for different analytes.

83. **(Previously Presented)** The method of claim 49, wherein said signal is generated during a polymerase chain reaction.

84. **(Previously Presented)** The method of claim 49, further comprising constructing a diagram.

85. **(Previously Presented)** The method of claim 84, wherein said diagram is constructed by plotting possible combinations of said first values and said second values for positive control samples.
86. **(Previously Presented)** The method of claim 49, wherein at least one of said analytes comprises a polynucleotide.
87. **(Previously Presented)** The method of claim 49, further comprising transmitting information concerning the presence or absence of said analyte through a computer network.
88. **(Previously Presented)** The method of claim 49, further comprising providing information concerning the presence or absence of said analyte to a health care professional, wherein the health care professional makes a clinical decision based on said information.
89. **(Canceled)**
90. **(Currently Amended)** The method of claim 49[[89]], wherein said encoding is designed to be non-degenerate by enumerating legitimate results that can be obtained from said encoding, identifying legitimate results that are degenerate, and eliminating at least one potential analyte code from said encoding to eliminate degeneracy.
91. **(Previously Presented)** The method of claim 49, wherein said method does not comprise immobilization of said analytes.
92. **(Previously Presented)** The method of claim 55, wherein said method does not comprise immobilization of said analytes.

REMARKS

In response to the Non Final Office Action mailed November 23, 2016, Applicants respectfully request consideration of the claims provided herein. With this response, claim 89 is canceled without prejudice or disclaimer.

Claims 49, 51, 53, 55-56, and 75-92 were pending prior to the entry of the above-mentioned amendments. Claim 89 is canceled.

Claims 49, 55 and 90 are amended. Support for amended claims 49 and 55 can be found at least in paragraphs [0003], [0031], [0037], [0039], [0041] and [00119] of the specification as published. Claim 49 has also been amended to correct typographical errors. Claim 90 has been amended to depend from claim 49.

No new matter has been added. Accordingly, claims 49, 51, 53, 55-56, and 75-88 and 90-92 are currently pending.

All amendments to the claims and any cancellations of claims are made without conceding the validity of the rejection; and Applicants reserve the right to pursue any canceled material in any future, related applications.

Claim Rejection-35 U.S.C. § 112 (pre-AIA), second paragraph

Former claim 89 was rejected under U.S.C. § 112 (pre-AIA), second paragraph. *See* Office Action, page 3. In response, without admission of the propriety of this rejection, claim 89 has been cancelled herein and claim 90 has been amended to depend from claim 49. In view of the present cancellation of claim 89, the rejection is rendered moot.

Claim Rejection-35 U.S.C. § 102

Former claims 49, 51, 53, 55, 56, 75-81, 84, 85 and 88-92 were rejected under pre-AIA USC 102(b) as being anticipated by U.S. Patent Application Publication No. 2003/0148544 to Nie et. al. *See* Office Action at p. 5. Claim 89 has been canceled herein.

The Office asserts, *inter alia*, that the capability of "non-degenerately detecting the presence or absence of at least seven analytes in a single sample volume…" as previously recited was interpreted as an "intended use that does not differentiate the recitations of the claims from the prior art".

In response, without admitting the propriety of the rejection and solely in the interest of advancing prosecution, Applicants have canceled claim 89 and amended independent claims 49 and 55 to recite that the claimed methods are carried out without a step of "immobilization of said analytes, physical separation of said analytes, or mass spectrometry", and has replaced the expression "capable of detecting" with "detects". Applicants respectfully submit that the present amendments to independent claims 49 and 55 render the present rejection moot. However, in the event that a corresponding rejection is raised against any of the presently amended claims, Applicants respectfully traverse such rejection and submit the following argument.

Applicants submit that Nie does not anticipate presently amended independent claims 49 and 55 for at least the following reasons.

Applicant submits that none of the passages of Nie pointed to in the Office Action specifically discloses a method having each and every element of the presently claimed solution. Put another way, none of the cited passages discloses the identical composition "in as complete detail as is contained in the ... claim." *Richardson v. Suzuki Motor Co.*, 868 F.2d 1226, 1236, 9 USPQ2d 1913, 1920 (Fed. Cir. 1989); MPEP 2131. Accordingly, Applicants submit that the present amendments to independent claims 49 and 55 fully address the rejection raised in the Office Action under 35 USC § 102(a)(1).

In particular, Nie fails to teach a method of non-degenerately detecting the presence or absence of at least six (or at least seven) analytes in a single sample volume without immobilization of said analytes, physical separation of said analytes, or mass spectometry.

Applicants respectfully submit that it is evident from the teaching of Nie that the coding methods taught by Nie do not address the issue of degeneracy. Rather, Nie suggests that physical separation of analytes in order to distinguish between identically coded (i.e. degenerately coded) analytes. For example, at paragraph [0084], Nie suggests a method of detecting multiple analytes by flowing conjugates through a microchannel or by spreading on a substrate surface, each of which requires physical separation to allow for resolution of multiple analytes when employing a redundant coding scheme such as that taught by Nie.

In particular, Applicants submit that Nie explicitly teaches that codes can be formed with *every possible RGB combination*, which, if performed as described in Nie, will necessarily result in a redundancy when attempting to detect six or seven analytes in a single volume, without physical separation, melting curve analysis, or mass spectrometry. For example, based on a review of the potential combinations shown in Figure 1 of Nie, a person of ordinary skill in the art would understand that the codes shown were selected from the set of RGB combinations where the levels for each color channel range, at minimum, from 0 to 10 (hence, 11 values each). Thus, in the embodiment described and depicted in Figure 1, 11x11x11=1331 codes are possible. This is consistent with the following statements set forth in Nie at paragraph [0046]:

> Each color (i.e., wavelength) of the QD can be embedded in the bead at a predetermined intensity, thereby forming a multicolor QD-tagged bead. For each color, the use of 10 intensity levels (0, 1, 2, . . . 9) gives 9 unique codes (10^1-1), because level "0" cannot be differentiated from the background. The number of codes increases exponentially for each intensity and each color used. For example, a three color and 10 intensity scheme yields 999 codes (10^3-1), while a six color and 10 intensity scheme has a theoretical coding capacity of about 1 million (10^6-1). In general, n intensity levels with m colors generate (n^m-1) unique codes. However, the actual coding capabilities are likely to be substantially lower because of spectral overlapping, fluorescence intensity variations, and signal-to-noise requirements. In general, it is more advantageous to use more colors rather than more intensity levels, in order to increase the number of usable codes. The number of intensities is preferably from 0 to 20, more preferably 1-10, more preferably 2-8, more preferably 3-7, more preferably 4-6, more preferably 5-6, and most preferably 6. The number of colors is preferably 1-10 (e.g., 2-8), more preferably, 3-7, and most preferably 5-6. The term "multicolor QD", is meant that the more than one color of luminescent quantum dots are embedded in the bead. Although preferably more than one color of quantum dot is incorporated in the bead, instances wherein one or more colors' intensity is zero, such as a bead with the red:green:blue code of 1:0:0, is also encompassed by the present invention.

For illustrative purposes, three codes selected from this set are as follows:

- Target 1 label is (R=1,G=1,B=1);
- Target 2 label is (R=2, G=2, B=2); and
- Target 3 label is (R=3, G=3, B=3).

With this set, if target 1 is present in isolation, the intensity readout would come from contributions from the Target 1 label only, and would be (1,1,1). Similarly, if target 2 is present in isolation, the readout would be (2,2,2). Likewise, if Target 3 is present in isolation, the readout would be (3,3,3).

However, if targets 1 and 2 are both present in a measurement, the readout would be (3,3,3): ***the same readout for target 3 in isolation***, and it would be impossible to distinguish between a "target 3 only" signal (3,3,3) and a "target 1 and target 2 both present" signal (1,1,1 and 2,2,2 = 3,3,3). This happens because the codes specified are **degenerate**. Thus, the true combinations of targets cannot be discriminated using the method specified in Nie. Accordingly, Nie does not address this issue of degeneracy, and certainly does not teach or suggest a method that "non-degenerately detects the presence or absence of at least [six or seven] analytes in a single sample volume" as recited by the presently amended independent claims. With respect to the independent claims, these claims all depend from independent claim 49 or 55, and are not anticipated by Nie for at least the same reasons.

For the foregoing reasons, Applicants respectfully request withdrawal of the rejection of claims 49, 51, 53, 55, 56, 75-81, 84, 85, 88 and 90-92, as amended, under pre-AIA 35 U.S.C. 102(b).

Claim Rejection-35 U.S.C. § 103

Former claims 49, 51, 53, 55, 56, 75-81, 84, 85, and 88-92 were rejected under pre-AIA USC 103(a) as being purportedly obvious over Nie further in view Craig, *Nucleic Acids Research*, vol. 18, 1990, pp. 2653-2660, alone or in combination with International Patent Application Publication No. WO/2010/128206 to Orpana et al. *See* Office Action at pp. 9 and 10. Claim 89 has been canceled herein.

No *Prima Facie* Case of Obviousness Established - Not All Limitations Shown

Applicant respectfully traverses the rejection. As discussed above, Nie does not teach or suggest all of the limitations of independent claims 49 or 55, as amended, nor any claim dependent thereon. Further, the teachings of Craig and Orpana, either taken alone or in combination, do not teach or suggest the elements not taught by Nie, for example, these references do not teach a method of non-degenerately detecting the presence or absence of at least six (or at least seven) analytes in a single sample volume without immobilization of said analytes, physical separation of said analytes, or mass spectometry. Further, there is no motivation to modify the teachings of Nie, either alone or in combination, to arrive at the subject

matter of instant claims. Finally, none of Nie, Craig, nor Orpana, enable the methods recited in the presently amended claims.

Relevant Law

MPEP 2143, states that a *prima facie* case of obviousness may be established only when three basic criteria have been met. "*First, there must be some suggestion or motivation, either in the references themselves or in the knowledge generally available to one of ordinary skill in the art, to modify the reference or to combine reference teachings. Second there must be a reasonable expectation of success. Finally, the prior art reference (or references when combined) must teach or suggest all the claim limitations.*"

In Applicants' respectful submission, there is no suggestion or motivation in the teachings of Nie, Craig, or Orpana, either taken alone or in combination, to **non-degenerately detect** the presence or absence of at least six or seven analytes in a single sample volume without immobilization of said analytes, physical separation of said analytes, or mass spectrometry, as recited in independent claims 49 and 55, as amended. Indeed, with reference to the discussion of Nie above regarding the rejections raised under §102, Nie teaches a redundant method, and fails to even address the issue of degeneracy.

Neither Orpana nor Craig cure the defects or Nie. Indeed, neither Orpana nor Craig address the issue of redundancy in a coding scheme as recited in the presently amended claims.

Regarding the methods taught by Craig, these methods require spotting analytes onto nylon membranes. *See* Craig at p. 2654, first column. Accordingly, the method taught by Craig does not teach detection of the "presence or absence of at least six [or seven] analytes in a ***single sample volume***... ***without immobilization of said analytes or physical separation*** of said analytes". Indeed, the methods taught by Craig clearly require both immobilization and physical separation (on the nylon membranes), in order to allow for resolution and combination of the results obtained for each of the various probes. *See*, *e.g.*, Craig, Fig. 2.

Regarding the methods taught by Orpana, these methods fail to provide any teaching or suggestion of any method of coding, nor do they address the issue of coding or degeneracy. In particular, Orpana fails to cure the defects of Nie and Craig discussed above, and fails to teach or suggest any method of encoding and non-degenerately detecting the presence or absence of at

least six or seven analytes in a single sample volume without immobilization of said analytes, physical separation of said analytes, or mass spectrometry, as recited in the amended independent claims 49 and 55.

Conclusion

Accordingly, Applicants submits that the test set out at MPEP 2143 is not met in the present case, that the cited references, either taken alone or in combination, fail to render obvious the subject matter claimed by independent claims 49 and 55, as amended, and that a *prima facie* case of obviousness has not been established in the present case for those independent claims or the claims that depend therefrom. Favorable consideration of the amended claims is respectfully requested.

Claim Rejection-35 U.S.C. § 101

The Office had rejected former claims 49, 51, 53, 55, 56, 75-81 and 83-92 as being allegedly directed to a judicial exception "without significantly more". *See* Office Action at page 4. The Office went on to allege that the rejected claims were "directed to the abstract idea of encoding signals in a manner that reduces or eliminates degeneracy," and that the claims did "not include additional elements that [were] sufficient to amount to significantly more than the judicial exception… because providing samples, performing assays, and determin[ing] presence/absence patterns of analytes is routine and conventional in the prior art". *Id.*

In response, without admitting the propriety of the rejection and solely in the interest of advancing prosecution, Applicants have canceled claim 89 and amended independent claims 49 and 55 to recite that the claimed methods do not require "immobilization of said analytes, physical separation of said analytes, or mass spectrometry". Applicants respectfully submit that the present amendments to independent claims 49 and 55 render the present rejection moot. However, in the event that a corresponding rejection is raised against any of the presently amended claims, Applicants respectfully traverse such rejection and submit the following argument.

A. The Present Rejection Fails to Account for the Specific Requirements of the Claims

In the *Alice* decision, the Supreme Court applied a two-step framework for determination of patent eligibility under Section 101. First, one must "determine whether the claims at issue are directed to a patent-eligible concept." *Alice* at 2355. Second, one "must examine the elements of the claims to determine whether it contains an inventive concept sufficient to transform the claimed abstract idea into a patent-eligible application." *Id.* at 2357. In the second step, the claim elements must be analyzed separately and as an "ordered combination." *Id.* at 2359.

On November 2, 2016, the Robert W. Bahr, the Deputy Commissioner for Patent Examination Policy, issued a memorandum regarding "Recent Subject Matter Eligibility Decisions" (hereinafter "Nov. 2016 Eligibility Memo"). The Nov. 2016 Eligibility Memo is intended provide guidance to examiners "about finding eligibility for software claims." The Nov. 2016 Eligibility Memo at page 1. Here, the Nov. 2016 Eligibility Memo "provides a discussion of two of the recent decisions identifying eligible subject matter, namely *McRO, Inc. dba Planet Blue v. Bandai Namco Games America Inc.*, 120 USPQ2d 1091 (Fed. Cir. 2016) and *BASCOM Global Internet Services v. AT&T Mobility LLC*, 827 F.3d 1341 (Fed. Cir. 2016). *Id.* Specifically, the Nov. 2016 Eligibility Memo noted:

- "The *McRO* court cautioned that courts '**must be careful to avoid oversimplifying the claims**' by looking at them generally and **failing to account for the specific requirements of the claims**." *Id.* at page 2 (emphasis added).
- Following the section titled "Notable Points from *McRO*," the Nov. 2016 Eligibility Memo stated how "[e]xaminers should consider the claim **as a whole** under Step 2A of the USPTO's SME guidance, and **should not overgeneralize the claim or simplify it into its "gist" or core principles**, when identifying a concept as a judicial exception." *Id.* (emphasis added).
- Notwithstanding the claims having "additional elements [that] were generic computer, network, and Internet components that did not amount to significantly more when considered individually," the *BASCOM* court still "recognize[d] that **when combined, an inventive concept may be found in the non-conventional and non-generic arrangement**." *Id.* at page 3.

- Following the section titled "Notable Points from *BASCOM*," the Nov. 2016 Eligibility Memo stated how "examiners should – when analyzing Step 2B of the USPTO's SME guidance – consider the additional elements in **combination**, as well as individually, when determining whether a claim as a whole amounts to significantly more, as this may be found in the non-convention and non-generic arrangement of known, conventional elements." *Id.* (emphasis in original).

As set out above, the Office alleges that the rejected claims were "directed to the abstract idea of encoding signals in a manner that reduces or eliminates degeneracy," and that the claims did "not include additional elements that [were] sufficient to amount to significantly more than the judicial exception… because **providing samples, performing assays, and determin[ing] presence/absence patterns of analytes is routine and conventional in the prior art**". Office Action at p. 4 [emphasis added].

However, in so doing, the Office fails to account for the claims' **specific** requirements – a failure the Nov. 2016 Eligibility Memo specifically warns against. *See* the Nov. 2016 Eligibility Memo at 2.

By way of example, claim 49 recites:

> **A method of detecting the presence or absence of each analyte of a plurality of analytes, comprising**:
>
> a. encoding each of said analytes as a first value of a signal, thereby generating a coding scheme, wherein each of said analytes is represented in said coding scheme by one of said first values, wherein said encoding is performed in a manner that reduces or eliminates degeneracy;
> b. **providing a sample comprising, or potentially comprising, at least one of said analytes**;
> c. **contacting said sample with analyte-specific reagents** that generate said first values, as represented in said coding scheme, when each of said analytes is present;
> d. **cumulatively measuring said first values of said signal within said sample, thereby providing a cumulative measurement**; and
> e. determining whether each of said analytes is present or absent based on said cumulative measurement and said coding scheme;
> **wherein said method is non-degenerately detects the presence or absence of at** least **seven analytes in a single sample volume, in any combination of presence or absence, without immobilization of said analytes, physical separation of said analytes, or mass spectometry**. [Emphasis to exemplary specific elements added].

Rather than addressing the specific elements recited in the claim, as presently amended, including the exemplary specific elements highlighted above, the Office generalizes the entire claim with a broad description. In doing so, the Office simplifies the claim to its "gist" or core principles. This is improper. The Nov. 2016 Eligibility Memo specifically prohibits this. The Nov. 2016 Eligibility Memo at page 2 ("Examiners should consider the claim as a whole under Step 2A of the USPTO's SME guidance, and should not overgeneralize the claim or simplify it into its 'gist' or core principles, when identifying a concept as a judicial exception.").

To summarize, the Office oversimplifies the claims, and fails to address the specific elements recited in the claims. By generalizing the claims (rather than accounting for the specific requirements of the claims), the Office fails to adhere to its own guidelines in the Nov. 2016 Eligibility Memo. For at least these reasons, Applicant disagrees that the Office has properly satisfied the first step and respectfully requests that the Office withdraw the present rejection.

B. The Claims Recite an Inventive Concept

Even assuming, *arguendo*, that independent claims 49 and 55 are directed to an abstract idea, which is traversed in Sections II.A and II.B, *supra*, the claims recite "significantly more" than an abstract idea itself.

The Nov. 2016 Eligibility Memo provides guidance on how examiners should apply the second step. *See* the Nov. 2016 Eligibility Memo at page 3. Specifically, the Nov. 2016 Eligibility Memo explicated the *BASCOM* case, highlighting how the *BASCOM* court found an inventive concept in the "claimed system for filtering content retrieve from an Internet computer network" may be found notwithstanding additional elements being "generic computer, network, and Internet components." *Id.*

A closer examination of *BASCOM* provides further guidance on how to apply the second step. In *BASCOM*, the lower court applied the second step by looking at each limitation individually and collectively and finding that there was no inventive concept because "the limitations, 'considered individually, or as an ordered combination, are no more than routine additional steps involving generic computer components and the Internet, which interact in well-known ways to accomplish the abstract idea of filtering Internet content." *BASCOM*, 827 F.3d at 1349.

The Federal Circuit held the lower court erred in its analysis – in particular its conclusion about the lack of inventive concept as it pertained to "the ordered combination of limitations." *Id.* The Federal Circuit emphasized that the "inventive concept inquiry requires more than recognizing that each claim element, by itself, was known in the art" and noted how the lower court's analysis improperly "looked similar to an obviousness analysis under 35 U.S.C. § 103, except lacking an explanation of a reason to combine the limitations as claimed." *Id.* at 1350. The Federal Circuit then proceeded to describe the inventive concept of the relevant patent by pointing to specific parts of the specification and ultimately found that the "specific method of filtering Internet content cannot be said, as a matter of law, to have been conventional or generic":

> The inventive concept described and claimed in the [] patent is the installation of a filtering tool at a specific location, remote from the end-users, with customizable filtering features specific to each end user. This design gives the filtering tool both the benefits of a filter on a local computer and the benefits of a filter on the ISP server. BASCOM explains that the inventive concept rests on taking advantage of the ability of at least some ISPs to identify individual accounts that communicate with the ISP server and to associate a request for Internet content with a specific individual account. According to BASCOM, the inventive concept harnesses this technical feature of networking technology in a filtering system by associating individual accounts with their own filtering scheme and elements while locating the filtering system on an ISP server.

Id. (internal citations to patent specification and oral arguments omitted).

The facts and holding in *BASCOM* are analogous to the present situation.

First, like the overturned lower court in *BASCOM*, the Office erred in its analysis by arguing how the recitation of "providing samples, performing assays, and determin[ing] presence/absence patterns of analytes is routine and conventional in the prior art"." Office Action at p. 4. Thus, the Office's argument amounts to an obviousness analysis under 35 U.S.C. § 103 without the explanation of a reason to combine the limitations as claimed – an argument the Federal Circuit in *BASCOM* specifically held was improper in the second step. *BASCOM*, 827 F.3d at 1350.

Next, like the specific method of filtering Internet content in *BASCOM*, a very specific system, namely analytes in a sample volume, and method of detecting the presence or absence of those analytes in that single sample volume **(without immobilization of said analytes, physical separation of said analytes, or mass spectrometry)** exists in the presently claimed methods. In other words, the present claims have specific applications in the marketplace, which "are not likely to be so abstract that they override the statutory language and framework of the Patent Act." *See Res. Corp. Techs. v. Microsoft Corp.*, 627 F.3d 859, 869 (Fed. Cir. 2010).

Finally, the claims in *BASCOM* sought to overcome the technical challenges associated with networking technology with a filtering system by associating individual accounts with their own filtering scheme and elements while locating the filtering system on an ISP server. *See BASCOM*, 827 F.3d at 1350. Similarly, the claims at issue seek to overcome the technical challenges associated with detecting the presence or absence of six or seven analytes in a single volume namely difficulties associated with detection of such analytes in that single sample volume without immobilization of said analytes, physical separation of said analytes, or mass spectrometry, as discussed further above with respect to the rejections under 35 USC §§ 102 and 103.

In sum, the second step analysis, when conducted in a manner consistent with the governing caselaw and the Nov. 2016 Eligibility Memo, should arrive at a conclusion that the presently amended claims recite an inventive concept that renders the claims patent eligible under Section 101. Under *BASCOM* and the Office's own guidelines set forth in the Nov. 2016 Eligibility Memo, the independent claims 49 and 55 in the pending application recite an inventive concept and satisfy the second step. For at least these reasons, Applicants submit that the second step is satisfied and respectfully request the Office to consider the claims as being patent eligible under Section 101, and to withdraw the rejection.

CONCLUSION

Applicants believe that the application is in condition for allowance and respectfully solicit the Examiner to expedite prosecution of this patent application to issuance. Should the Examiner have any questions, the Examiner is encouraged to telephone the undersigned.

The Commissioner is authorized to charge any additional fees which may be required, including petition fees and extension of time fees, to Deposit Account No. 23-2415 (Docket No. 38075-716.301).

Respectfully submitted,

WILSON SONSINI GOODRICH & ROSATI

Dated: May 1, 2017 By: /Lee A. Johnson/

Lee A. Johnson, Reg. No. 75,671

650 Page Mill Road
Palo Alto, CA 94304-1050
(650) 493-9300
Customer No. 021971

9115473-1.doc

EXHIBIT C

Electronically Filed On: November 6, 2017

PATENT
Attorney Docket No.: 38075-716.301

IN THE UNITED STATES PATENT AND TRADEMARK OFFICE

In re Application	
Inventors: Emil KARTALOV, *et al.*	Confirmation No.: 1065
Application No.: 14/451,876	Art Unit: 1631
Filed: August 5, 2014	Examiner: Russell Scott NEGIN
Title: **SIGNAL ENCODING AND DECODING IN MULTIPLEXED BIOCHEMICAL ASSAYS**	Customer No. 021971

Commissioner for Patents
P.O. Box 1450
Alexandria, VA 22313-1450

RESPONSE TO FINAL OFFICE ACTION AND REQUEST FOR CONTINUED EXAMINATION

Dear Sir:

This Amendment is submitted in response to the Final Office Action mailed June 6, 2017 and the Advisory Action mailed August 23, 2017. A Request for Continued Examination and requisite fees are submitted herewith.

A Petition for Extension of Time is requested and the fee set forth under 37 C.F.R. §1.17(a)(3) is electronically submitted herewith.

Amendments to the Claims begins on page **2** of this paper.
Remarks begin on page **8** of this paper.
Conclusion begin on page **14** of this paper.

Amendments to the Claims

This listing of claims will replace all prior versions, and listings, of claims in this application. The following amendments do not constitute an admission regarding the patentability of the amended subject matter and should not be so construed. Applicants reserve the right to pursue the subject matter of the canceled claims in this or any other appropriate patent application. Further, none of Applicants' amendments are to be construed as dedicating any such subject matter to the public, and Applicants reserve all rights to pursue any such subject matter in this or a related patent application.

Listing of claims:

1. **(Withdrawn)** An assay that is capable of unambiguously detecting the presence or absence of each of at least seven (7) analytes, in any combination of presence or absence, in a single sample volume without immobilization of said analytes, physical separation of said analytes, melting curve analysis, or mass spectrometry.
2. **(Withdrawn)** The assay of claim 1, wherein each of said analytes is encoded as a value of one component of a signal.
3. **(Canceled)**
4. **(Withdrawn)** The assay of claim 2, wherein each of said analytes is encoded as at least one first value in a first component of said signal and at least one second value in a second component of said signal.
5. **(Withdrawn)** The assay of claim 2, wherein each of said analytes is encoded as a first value in a first component of said signal at each of a plurality of second values in a second component of said signal.

6.-8. **(Canceled)**

9. **(Withdrawn)** The assay of claim 4, wherein said first value is an intensity or range of intensities and said second value is a wavelength or range of wavelengths.

10.-12. **(Canceled)**

13. **(Withdrawn)** The assay of claim 2, wherein said signal is an electromagnetic signal.

14.-16. **(Canceled)**

17. **(Withdrawn)** The assay of claim 1, wherein said detecting is performed with reagents comprising hybridization probes.

18. **(Withdrawn)** The assay of claim 1, wherein said detecting is performed with a plurality of hybridization probes, comprising an identical fluorophore, wherein said plurality of hybridization probes are specific for different analytes.

19. **(Withdrawn)** The assay of claim 1, wherein said detecting is performed with a plurality of hybridization probes comprising different fluorophores, wherein said plurality of hybridization probes are specific for different analytes.

20.-21. **(Canceled)**

22. **(Withdrawn)** The assay of claim 2, wherein said signal is generated during a polymerase chain reaction.

23.-26. **(Canceled)**

27. **(Withdrawn)** The assay of claim 4, further comprising constructing a diagram.

28. **(Withdrawn)** The assay of claim 27, wherein said diagram is constructed by plotting possible combinations of said first values and said second values for positive control samples.

29. **(Withdrawn)** The assay of claim 1, wherein at least one of said analytes comprises a polynucleotide.

30.-33. **(Canceled)**

34. **(Withdrawn)** The assay of claim 1, further comprising transmitting information concerning the presence or absence of said analyte through a computer network.

35. **(Withdrawn)** The assay of claim 1, further comprising providing information concerning the presence or absence of said analyte to a health care professional, wherein the health care professional makes a clinical decision based on said information.

36. **(Canceled)**

37. **(Withdrawn)** The assay of claim 1, wherein at least one step of said assay is performed using a computer.

38. **(Withdrawn)** The assay of claim 37, wherein said computer is located on a remote server.

39. **(Withdrawn)** The assay of claim 37, wherein said computer is located on a thermal cycler.

40.-41. **(Canceled)**

42. **(Withdrawn)** The assay of claim 2, wherein said coding is innately non-degenerate.

43. **(Withdrawn)** The assay of claim 42, wherein said coding is designed to be non-degenerate by enumerating legitimate results that can be obtained from said encoding, identifying legitimate results that are degenerate, and eliminating at least one potential analyte code from said encoding to eliminate degeneracy.

44. **(Canceled)**

45. **(Withdrawn)** The assay of claim 1, wherein said assay is an end-point assay.

46. **(Canceled)**

47. **(Withdrawn)** The assay of claim 1, wherein said assay is a liquid phase assay.

48. **(Canceled)**

49. **(Currently Amended)** A method of detecting the presence or absence of at least seven polynucleotide~~each~~ analytes, in any combination of presence or absence, in a single sample solution volume ~~of a plurality of analytes~~, the method comprising:

~~a)[[a.]] encoding each of said analytes as a first value of a signal, thereby generating a coding scheme, wherein each of said analytes is represented in said coding scheme by one of said first values, wherein said encoding is performed in a manner that reduces or eliminates degeneracy;~~

a)[[b.]] providing a sample solution volume comprising, or potentially comprising, at least one of ~~said~~ at least seven polynucleotide analytes, and comprising at least seven hybridization probes, each hybridization probe corresponding to one of the at least seven polynucleotide analytes, wherein each hybridization probe comprises at least one fluorophore selected from four fluorophores, and wherein each hybridization probe, when excited and when contacted with its corresponding polynucleotide analyte, generates a

cumulative intensity signal, further wherein each generated cumulative intensity signal comprises at least one signal generated by excitement of at least one of the four fluorophores;

b)[[c.]] contacting said sample solution volume with the plurality of hybridization probes and exciting the hybridization probes to generate the cumulative intensity signal(s) if one or more of the at least seven polynucleotide analytes is present in the sample volume~~analyte-specific reagents that generate said first value, as represented in said coding scheme, when each of said analytes is present~~; and

c)[[d.]] measuring the cumulative intensity signal(s), thereby generating a cumulative signal measurement, wherein the cumulative signal measurement non-degenerately indicates the presence or absence of the at least seven polynucleotide analytes, in any combination of presence or absence,~~cumulatively measuring said first values of said signal within said sample, thereby providing a cumulative measurement;~~

~~e)[[e.]] determining whether each of said analytes is present or absent based on said cumulative measurement and said coding scheme~~;

wherein said method non-degenerately detects the presence or absence of the at least seven polynucleotide analytes in [[a]]said single sample solution volume, in any combination of presence or absence, without requiring any step of immobilization of said polynucleotide analytes, physical separation of said polynucleotide analytes, or mass ~~spectometry~~spectrometry.

50. **(Canceled)**

51. **(Canceled)**

52. **(Canceled)**

53. **(Canceled)**

54. **(Canceled)**

55. **(Canceled)**

56. **(Canceled)**

57.-74. **(Canceled)**

75. **(Canceled)**

76. **(Canceled)**

77. **(Canceled)**

78. **(Canceled)**

79. **(Canceled)**

80. **(Canceled)**

81. **(Currently Amended)** The method of claim 49, wherein said ~~detecting is performed with a plurality of~~ hybridization probes[[,]]comprise ~~comprising~~ an identical fluorophore, and wherein said plurality of hybridization probes are specific for different polynucleotide analytes.

82. **(Withdrawn)** The method of claim 49, wherein said detecting is performed with a plurality of hybridization probes comprising different fluorophores, wherein said plurality of hybridization probes are specific for different analytes.

83. **(Currently Amended)** The method of claim 49, wherein said cumulative intensity signal(s) ~~signal is~~ are generated during a polymerase chain reaction.

84. **(Canceled)**

85. **(Canceled)**

86. **(Canceled)**

87. **(Currently Amended)** The method of claim 49, further comprising transmitting information concerning the presence or absence of said polynucleotide analytes through a computer network.

88. **(Currently Amended)** The method of claim 49, further comprising providing information concerning the presence or absence of said polynucleotide analytes to a health care professional, wherein the health care professional makes a clinical decision based on said information.

89. **(Canceled)**

90. **(Canceled)**

91. **(Canceled)**

92. **(Canceled)**

93. **(New)** The method of claim 49, wherein at least one step of said method is performed using a computer.

94. **(New)** The method of claim 93, wherein said computer is located on a remote server.

95. **(New)** The method of claim 93, wherein said computer is located on a thermal cycler.

REMARKS

The following remarks are in response to the Examiner's Office Action mailed on June 6, 2017 and Advisory Action mailed August 23, 2017.

I. Examiner Interview

Applicant thanks Examiners Russell Scott Negin and Marjorie Moran for the courtesy extended during the telephonic interviews conducted on September 17, October 16, and November 1, 2017.

Discussions were held with the Examiners regarding strategies for overcoming the rejections raised under 35 USC § 101, and a proposal to amend the claims along the lines of the amendments presented herein.

II. Status of the Claims

Claims 49, 81, 83, 87, and 88 are pending. Claims 3, 6-8, 10-12, 14-16, 20-21, 23-26, 30-33, 36, 40-41, 44, 46, 48-80, 84-86, and 89-92 are canceled without prejudice. Claims 1-2, 4-5, 9, 13, 17-19, 22, 27-29, 34-35, 37-39, 42-43, 45, 47, and 82 are withdrawn. Claims 49, 81, 83, 87, and 88 are amended herein. New claims 93-95 are added herein.

Claim Support

Support for the amended and new claims is found in the original claims and throughout the specification. In particular, support for the step of "measuring the cumulative intensity signal(s), thereby generating a cumulative signal measurement" as recited at step c) of independent claim 49, as amended, is provided at least at paragraphs [0134], [0135], and [0154] of the application as published.

Further, support for amended claim 81, which depends from claim 49 and recites "said hybridization probes comprise an identical fluorophore… [and] wherein said plurality of hybridization probes are specific for different polynucleotide analytes" is provided at least at section "E. Encoding Methods Using One Color and One Intensity Per Analyte but Different Intensities

Among Analytes" at paragraphs [0101]-[0105]. In particular, at paragraph [0104], the third sentence provides an exemplary description in how a single colored fluorophore and different intensities are utilized to distinguish up to 16 different analytes.

No new matter is introduced by any amendment made herein.

Upon entry of the amended claims, claims 49, 81, 83, 87, and 93-95 will be under examination. Favorable consideration of these claims is respectfully requested in light of the present amendments and the following remarks.

III. Claim Rejections Under 35 U.S.C. §101

The Office had maintained the rejection of former claims 49, 51, 53, 55, 56, 75-81, 83-88, and 90-92 under 35 U.S.C. § 101, asserting that these claims were directed to a judicial exception (i.e., a law of nature, a natural phenomenon, or an abstract idea) without significantly more. *See* Office Action at pp. 3-4. This rejection is respectfully traversed in view of the present amendments to sole pending independent claim 49, for at least the following reasons.

The 2014 USPTO interim guidance on patent subject matter eligibility, *Federal Register*, vol. 79, no. 241 ("2014 IEG") sets out a two part test to be applied when evaluating a claim for patent eligibility. Step 1 asks whether the claim is directed to a process, machine, manufacture, or composition of matter. Independent claim 49, as amended, is directed to a "method of detecting the presence or absence of at least seven polynucleotide analytes, in any combination of presence or absence, in a single sample solution volume". Applicant submits that this claim, as amended, is directed to a <u>process</u>, and is therefore satisfies Step 1 of the test set out in the 2014 IEG. Step 2A of the test asks whether the claim is directed to a law of nature, a natural phenomenon, or an abstract idea. Applicant respectfully submits that claim 49, as amended, does not recite any of these judicial exceptions, and that Step 2A of the 2014 IEG test is satisfied. Accordingly, Applicant submits that independent claim 49, as amended, is patent eligible under 35 U.S.C. § 101.

Even if the Office asserts that amended claim 49 is directed to an abstract idea, which Applicant would strongly disagree with, the claims recite "significantly more" than an abstract idea itself. As noted in the previous response filed on May 2, 2017, the Nov. 2016 Eligibility Memo

further provides guidance on how examiners should apply the second step. Specifically, the Nov. 2016 Eligibility Memo highlights that regarding *BASCOM*, "examiners should consider the additional elements in **combination,** as well as individually, when determining whether a claim as a whole amounts to significantly more, as this may be found in the nonconventional and non-generic arrangement of known, conventional elements." (Emphasis in Original) Furthermore, the Nov. 2016 Eligibility Memo notes that "the district court erred by failing to recognize that when combined, an inventive concept may be found in the non-conventional and non-generic arrangement of the additional elements, *i.e.,* the installation of a filtering tool at a specific location, remote from the end-users, with customizable filtering features specific to each end user (note that the term 'inventive concept' is often used by the courts to describe additional element(s) that amount to significantly more than a judicial exception)."

The Instant Invention Does Not Seek to Monopolize

Lastly, Applicant does not seek to preempt others from all possible uses of analyte detection by a coding scheme. The Federal Circuit, in *McRO, Inc. v. Bandai Namco Games Am. Inc.*, opined that "[t]he preemption concern arises when the claims are not directed to a specific invention and instead improperly monopolize 'the basic tools of scientific and technological work.'" *McRO, Inc. v. Bandai Namco Games Am. Inc.*, 837 F.3d 1314 (Fed. Cir. 2016) (quoting *Alice*, 134 S. Ct. at 2354, in turn quoting *Myriad*, 133 S. Ct. at 2116). The *McRO* court further explains that the claims at issue were valid under § 101 because:

> The specific structure of the claimed rules would prevent broad preemption of all rules-based means of automating lip synchronization unless the limits of the rules themselves are broad enough to cover all possible approaches. … By incorporating the specific features of the rules as claim limitations, claim 1 is limited to a specific process for automatically animating characters using particular information and techniques and does not preempt approaches that use rules of a different structure or different techniques.
>
> *Id.* at 1315-16.

Similarly, the *BASCOM* court notes that "the claims of the '606 patent do not preempt the use of the abstract idea of filtering content on the Internet or on generic computer components performing conventional activities. The claims carve out a specific location for the filtering system

(a remote ISP server) and require the filtering system to give users the ability to customize filtering for their individual network accounts." *BASCOM Global Internet Services v. AT&T Mobility LLC,* 827 F .3d 1350 (Fed. Cir. 2016).

Here, as with the claims in *McRO* and *BASCOM*, the instant claims do not preempt means of detecting target analytes. Instead, the instant claims are limited to a specific process of detecting the presence or absence of each analyte of a plurality of polynucleotide analytes in a single sample volume without immobilization, physical separation, or mass spectrometry.

Based on the above, Applicant respectfully submits that the instant claims are directed to patent eligible subject matter. Withdrawal of the rejection under 35 U.S.C. § 101 is respectfully requested.

IV. Claim Rejections Under 35 U.S.C. §§102 and 103

The Office had maintained the rejection to previously submitted claims 49, 51, 53, 55-56, 75-78, 80-81, 84-88, and 90-92 under pre-AIA 35 U.S.C. 102, citing a new reference, namely Lin et al. (US2013/0261019A1) (hereinafter Lin), to support the rejection. In particular, the Office asserted that Lin teaches "nondegenerate combinations of barcodes" and that the methods of Lin "do not involve immobilization of analytes, physical separation of analytes, or mass spectrometry." *See* Office Action at pp. 4-7.

As set out in the MPEP, [a] claim is anticipated only if each and every element as set forth in the claim is found, either expressly or inherently described, in a single prior art reference. (MPEP 2131, quoting *Verdegaal Bros. v. Union Oil Co. of California*, 814 F.2d 628, 631, 2 USPQ2d 1051, 1053 (Fed. Cir. 1987). "[U]nless a reference discloses within the four corners of the document not only all of the limitations claimed but also all of the limitations arranged or combined in the same way as recited in the claim, it cannot be said to prove prior invention of the thing claimed and, thus, cannot anticipate under 35 U.S.C. § 102." *Net MoneyIn, Inc. v. VeriSign, Inc.*, No. 2007-1565 slip op. at 18-19 (Fed. Cir. Oct. 20, 2008).

As discussed in the interview held September 19, 2017, and as reflected in the Interview Summary dated September 22, 2017, the present amendments to sole independent claim 49, which has been amended to recite a step of measuring a cumulative <u>intensity</u> signal, overcome the rejections based on Lin. Lin does not teach a method for indicating the presence or absence of at

least seven polynucleotide analytes based on measurement of intensity. Instead, the crux of Lin's invention is the use of color-coded patterns deposited on a nanorod barcode probe to detect a target of interest. The instant invention utilizes intensity to detect targets of interest. Therefore, the instant invention is not anticipated by Lin for at least this reason.

Further, Applicant maintains the position set out in the previous Office Action response that the claims, as amended, are not anticipated by Lin, since Lin teaches a method which is inherently redundant, and fails to non-degenerately indicate the presence or absence of at least seven polynucleotide analytes, as recited by the presently amended independent claim 49.

In light of the above, Applicant respectfully submits that independent claims 49 and their respective dependent claims are not anticipated by Lin. Withdrawal of the rejection under pre-AIA 35 U.S.C. §102(e) is respectfully requested.

V. Claim Rejections Under 35 U.S.C. §103

The Office had rejected former claims 79 and 83 under pre-AIA 35 U.S.C. 103(a) as being unpatentable over Lin in further view of Nie et al. (US 2003/0148544 A1) (claim 79) and in view of Orpana et. Al (WO 2010/128206) (claim 83). Without admission of the propriety of this rejection and solely in the interest of expediting prosecution, Applicant has cancelled claim 79 herein, rendering the rejection of claim 79 moot.

As to the rejection of claim 83, which depends from independent claim 49, Applicant refers to the deficiencies in Lin discussed at § IV, *supra*. Applicant respectfully submits that for at least these reasons, Lin fails to teach or suggest all of the limitations of dependent claim 83. Further, the teachings of Nie and Orpana fail to remedy the deficiencies of Lin. Accordingly, Applicant submits that claim 83, as amended, is not obvious over Lin, Nie, and Orpana, either alone or in combination. Withdrawal of the rejection under pre-AIA 35 U.S.C. §103 is respectfully requested.

VI. Double Patenting

Former claims 49, 51, 53, 55, and 56 are rejected on the ground of nonstatutory double patenting as being unpatentable over claims 20-24, respectively, of U.S. Patent No. 8,838,394.

Applicant respectfully traverses the rejection at least in view of the present amendments to sole independent claim 49. Claims 20-24 of U.S. Patent No. 8,838,394 fail to teach or suggest the

elements of claim 49, as amended. In particular, the cited claims at least fail to teach or suggest steps b) and c) of the presently amended claim 49, namely:

b) contacting said sample solution volume with the plurality of hybridization probes and <u>exciting the hybridization probes to generate the cumulative intensity signal(s) if one or more of the at least seven polynucleotide analytes is present</u> in the sample volume; and

c) <u>measuring the cumulative intensity signal(s), thereby generating a cumulative signal measurement</u>, wherein the cumulative signal measurement non-degenerately indicates the presence or absence of the at least seven polynucleotide analytes, in any combination of presence or absence…

For at least the foregoing reasons, Applicant submits that the present rejection is rendered moot by the amendments to the claims submitted herewith.

CONCLUSION

In light of the remarks set forth above, Applicant believes that the pending claims are under condition for allowance. Applicant respectfully solicits the Examiner to expedite the prosecution of this patent application to issuance. Should the Examiner have any question, the Examiner is encouraged to telephone the undersigned.

The Commissioner is authorized to charge any underpayment or credit any overpayment to Deposit account No. 23-2415 (Attorney Docket No. 38075-716.301).

Respectfully submitted,

Date: November 6, 2017 By: /Lee A. Johnson/
Lee A. Johnson, Reg. No. 75,671

WILSON SONSINI GOODRICH & ROSATI
650 Page Mill Road
Palo Alto, CA 94304-1050
Phone: (650) 493-9300
Customer No. 021971

EXHIBIT D

UNITED STATES PATENT AND TRADEMARK OFFICE

BEFORE THE PATENT TRIAL AND APPEAL BOARD

BIO-RAD LABORATORIES, INC.,
Petitioner,

v.

CALIFORNIA INSTITUTE OF TECHNOLOGY
Patent Owner

IPR 2024-____
U.S. PATENT NO. 10,770,170 B2

DECLARATION OF CARL A. BATT, PH.D. IN SUPPORT OF PETITIONER FOR *INTER PARTES* REVIEW

Mail Stop "PATENT BOARD"
Patent Trial and Appeal Board
U.S. Patent and Trademark Office
P.O. Box 1450
Alexandria, VA 22313-1450

BIO-RAD EX.1002.001

B. Claim Construction

18. I understand that when interpreting the claims of the ’170 patent, I must do so from the perspective of one of ordinary skill in the art at the relevant priority date. I have not independently determined the priority date to which the ’170 patent is entitled. For purposes of this proceeding, I have been asked to assume that the ’170 patent has a priority date of February 3, 2012, the filing date of provisional application No. 61/594,480, the earliest-filed application to which the ’170 patent claims the benefit of priority. My analysis does not change if the ’170 patent is entitled to an earlier priority date falling after July 20, 2011, the filing date of provisional application No. 61/510,013 that one of the applied references relies on for the benefit of priority and incorporates by reference. Likewise, my analysis does not change if the ’170 patent is entitled to a later priority date.

19. I understand that in determining whether a patent claim under *inter partes* review before the Patent Trial and Appeal Board (PTAB) is unpatentable in view of prior art, the words of the claims of a patent are generally given their ordinary and customary meaning from the perspective of and as interpreted by a POSA at the time of the claimed invention. I also understand that patent claims are construed in light of the claim language, the patent specification (including the drawings), and the prosecution history (including the references cited during the prosecution of the patent). Specifically, it is my understanding that in determining

whether a patent claim under *inter partes* review before the PTAB is unpatentable in view of prior art, the PTAB uses the *Phillips*[1] standard for claim construction used in civil courts, which is to say that the claims must be given the meaning that the terms would have had to a person of ordinary skill in the art at the time of the priority date of the '170 patent consistent with the specification and file history of the '170 patent.

20. For this declaration, it is my opinion that each claim term can be easily understood by the skilled artisan without further construction, that is, my analysis is based on the plain and ordinary meaning of the claim terms, unless otherwise indicated. I understand that Petitioner has identified and proposed construction of certain terms in related proceedings. EX1003. To the extent any construction is required, I have been asked to apply claim constructions that are consistent with Patent Owner's position in related proceedings. I reserve the right, however, to supplement my opinions if Patent Owner proposes any constructions or the Board adopts any claim constructions.

C. Obviousness

21. I understand that a claim is unpatentable under 35 U.S.C. § 103 if the claimed subject matter as a whole would have been obvious to a POSA at the time

[1] *Phillips v. AWH Corp.*, 415 F.3d 1303, 1313 (Fed. Cir. 2005).

of the alleged invention, which I have been instructed to treat at present as no earlier than February 3, 2012, the filing date of provisional application No. 61/594,480, the earliest-filed application to which the ’170 patent claims the benefit of priority.

22. I understand that a POSA provides a reference point from which the prior art and the alleged invention should be viewed. This reference point prevents a person of ordinary skill from using one’s insight or hindsight in deciding whether a claim is obvious. I understand the use of such hindsight is impermissible.

23. I also understand that a claim can be obvious in light of a single reference or a combination of multiple prior art references. I understand that such a combination must meet certain requirements, further described below.

24. I understand that a patent claim composed of several elements is not proved obvious merely by demonstrating that each of its elements was known in the prior art. It has been explained to me that three requirements must be satisfied for a combination of prior art references to render obvious a claimed invention. First, the cited art must teach or suggest all the requirements of the invention as recited in the claims. However, I understand that a claim is obvious if a missing feature would be a natural result of the combination of prior art elements. Second, the cited art, coupled with the knowledge generally available in the art at the time of the invention, must contain some suggestion or incentive that would have motivated the ordinary skilled artisan to modify a reference or to combine references. I understand that the

FIG. 2

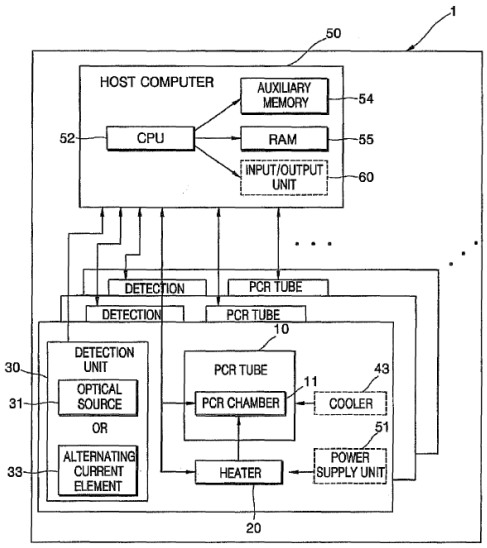

Id. Fig. 2.

IX. CLAIM CONSTRUCTION

125. I do not believe any express claim construction is required to determine the ’170 Patent claims are invalid because the prior art teaches and/or discloses the claim limitations under any reasonable construction.

126. In my analysis below, I have applied constructions consistent with those advanced by Petitioner and/or Patent Owner in parallel litigation. See EX1003. These terms include the following identified by Petitioner with proposed constructions:

- “each [of said at least 5] hybridization probe[s]” means “each collection of hybridization probes specific for a polynucleotide analyte.” EX1003 at 11; ’170 patent, claim 1.

- "cumulative intensity measurement" means "the signal or collection of signals from the probes that contact the present analytes." EX1003 at 16; '170 patent, claim 1.
- "exciting said at least one fluorophore to generate one or more signals if one or more of said at least five polynucleotide analytes is present in said plurality of droplets" means "exciting said at least one fluorophore to generate one or more signals if one or more of said at least five polynucleotide analytes contacts at least one probe in said plurality of droplets." EX1003 at 21; '170 patent, claim 1.
- "single sample solution volume" is non-limiting. EX1003 at 19; '170 patent, claim 1.
- "wherein said method non-degenerately detects the presence or absence of the at least seven polynucleotide analytes in said single sample solution volume, in any combination of presence or absence" is non-limiting. EX1003 at 23; '170 patent, claim 1.

127. Where there are other terms with constructions advanced by Patent Owner in parallel litigation, including apparent interpretations such as those in Patent Owner's infringement contentions (*see generally* EX1012), I have applied constructions consistent with them, as noted below where necessary.

128. I reserve the right to provide express construction(s) later in this proceeding in response to any explicit claim constructions or claim limitations that are contrary to a term's reasonable construction. My opinion may change if I am informed that the Court has construed any claim term in the '170 Patent.

X. GROUND 1: CLAIMS 1-9, 20 ARE OBVIOUS IN VIEW OF SAXONOV

129. The '170 Patent claims a method of purportedly detecting the presence or absence of at least five polynucleotide analytes using at least five hybridization probes that are each labeled with at least one of four fluorophores. EX1001 at claim 1. When a hybridization probe specific for at least one of the five polynucleotide analytes contacts the analyte in a sample, a color signal is purportedly generated. *Id.* The cumulative signal detected from the sample is purportedly used to determine whether any of the at least five polynucleotide analytes are present. *Id.*

130. At its core, the '170 patent relies on nothing more than the concept where the total number of different polynucleotide targets detected exceeds the number of available colors (fluorophores) simply by employing mixed color signals and/or using different signal intensities to provide composite signals that unambiguously identify which analytes are present in a sample. More specifically, the main concept of the '170 patent's claims is that four different colors provided by the four different fluorophores can be used with a coding scheme in order that more than four polynucleotide analytes can be detected. Another concept is that the

dPCR. *See supra* Section V. Further, for example, Saxonov specifically teaches using optical channels to detect emitted light signals that are generated upon excitation of fluorophores. EX1004 ¶ 37.

7. (e) measuring said one or more signals to generate a cumulative intensity measurement,

176. It is my opinion that Saxonov teaches measuring one or more signals to generate a cumulative signal measurement, as recited in claim 1. *See* EX1004 ¶¶ 5, 20, 37, 79, Figs. 4-8, 10; EX1007 at 12:21-13:8.

177. As discussed above, Saxonov discloses detecting the signal from the fluorophores on hybridization probes. *See supra* Section X.A.5. A POSA would have known to use a detection instrument to detect the light emitted from corresponding fluorophores. *See supra* Section X.A.3.

178. For example, Saxonov Figure 4, reproduced below, depicts measuring signals in its graphical trace of light signal(s) from probes in a digital PCR assay and Figure 5 graphs measured intensities of different signals in droplets, including the intensities for C61+, RPP30+, and RPP30+/C61+, which constitutes cumulative signal measurement. EX1004 ¶¶ 12-13, 20, 41, 53, 63-67, Figs. 4-5; *see also* EX1007 at 13:10-13, 17:4-19:23 (Example 3), 4:17-20, 5:19-6:5, 9:4-15, 10:8-11:3, 2:15-3:3, 12:21-13:8, Fig. 5.

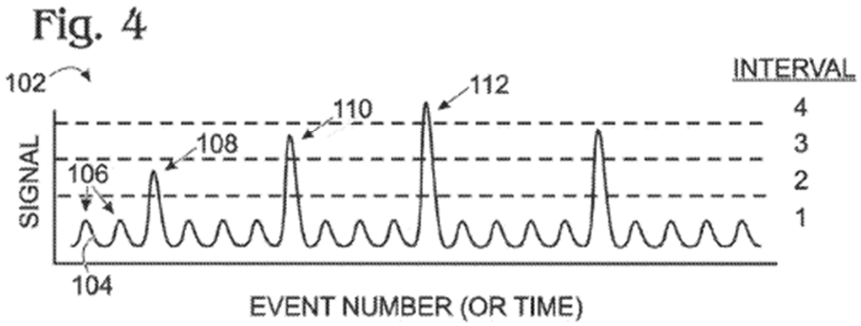

EX1004 Fig. 4.

179. The low peaks in Figure 4 represent droplets with no polynucleotide analytes present, which have minimal fluorescence resulting from noise from the unbound probes present in the droplets. EX1004 ¶ 53, Fig. 4. The peak 108 over the first signal threshold but below the second signal threshold depicted by the dotted lines corresponds to the cumulative intensity signal generated by droplets containing target analyte one. *Id.* The peak 110 between the second signal threshold and third signal threshold corresponds to the cumulative intensity signal generated by droplets containing target analyte two. *Id.* The peak 112 above the third signal threshold corresponds to the cumulative intensity signal generated by droplets containing both target analytes one and two. *Id.*

180. Figure 5, reproduced below, depicts measured cumulative intensity signals of each droplet, including measured intensities of signals for droplets that are C61+, RPP30+, and RPP30+/C61+, which constitutes a cumulative signal

measurement. EX1004 ¶¶ 63-67, Fig. 5; EX1007 at 13:10-13, 17:4-19:23 (Example 3), 4:17-20, 5:19-6:5, 9:4-15, 2:15-3:3, 12:21-13:8, Fig. 5. First, droplets positive for analyte "C61" have a generated cumulative intensity in the FAM channel of ~3,000 in arbitrary units and a negligible VIC intensity. *Id.* Second, droplets containing analyte "RPP30" have a generated cumulative intensity of ~10,000 in the FAM channel in arbitrary units with a negligible VIC intensity. *Id.* Finally, droplets containing both "RPP30" and "C61" have a generated cumulative intensity of ~13,000 in the FAM channel in arbitrary units and a negligible intensity in the VIC channel. *Id.*

Fig. 5

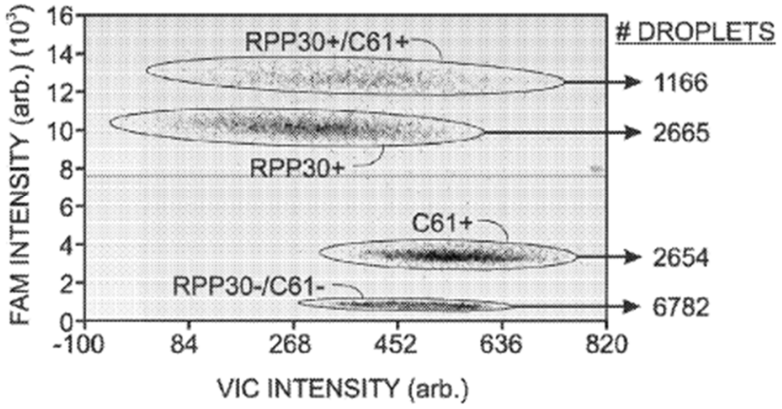

EX1004 Fig. 5.

181. Saxonov further discloses measuring cumulative intensities for signals from three probes of different intensity in the same color, and for two probes in the

same color and one in a second color. EX1004 ¶¶ 20, 41; EX1007 at 5:19-6:5, 10:8-11:3. In my opinion, a POSA would have understood that the measured signals include both different colors and intensities, as also taught by Saxonov. EX1004 ¶¶ 12, 20, 53, 76-78, Figs. 4-5, 10; EX1007 at 9:4-15. Thus, a POSA would have understood Saxonov to teach obtaining a cumulative intensity measurement including each signal of the potential signals from the included probes to identify and quantify the polynucleotide analyte(s) present.

8. wherein said cumulative intensity measurement corresponds to the presence of a unique combination of presence or absence of said at least five polynucleotide analytes in said sample; and

182. It is my opinion that Saxonov discloses but at minimum renders obvious that the cumulative intensity measurement corresponds to the presence of a unique combination of presence or absence of said at least five polynucleotide analytes in said sample, as recited in claim 1.

183. This claim element merely reflects the results of analyzing the claimed "at least five" polynucleotides using the components in the steps of the method that I have discussed above. *See supra* Sections X.A.2-X.A.5. The basis for why this element would have been obvious to a POSA is, accordingly, already amply set forth. *See id.*

184. As discussed above, Saxonov discloses the unambiguous detection of multiple analytes using multiple different colors and signal intensities to distinguish

among polynucleotides. *See supra* Section X.A.2; EX1004 ¶¶ 13, 17-18, 20, 63-67, 76-79, Figs. 5, 9-10; EX1007 at 2:15-3:3; 3:15-4:20, 5:19-6:5, 9:4-10:3, 12:21-19:29, Fig. 5. Saxonov, for instance, teaches using target-specific probes that are each of a single color and emit one of two or three different intensities to distinguish the presence or absence of any combination of eight or nine targets. *See supra* Section X.A.2; EX1004 ¶ 13, 20, 60-67, Fig. 5; EX1007 at 5:19-6:3.

185. In my opinion, also discussed above, a POSA would have understood Saxonov to teach and/or render obvious selecting color labels from four different colors. Saxonov also teaches that two or three different intensities per color provides eight or nine distinct labels, respectively. *See supra* Sections X.A.2, X.A.3. Further, Saxonov teaches selecting intensity values for labels such that the combined intensity for each color for any combination of targets is "separated by intensity" so that it can be uniquely mapped to the combination of targets. *See supra* Sections X.A.2, X.A.3; EX1004 ¶ 20 (describing that "an assay for three targets may generate eight clusters…separated by intensity").

186. Saxonov thus teaches assays that are non-degenerate by design in the same manner, and for the same reasons, as the analogous assays using single color labels of varying intensity disclosed in the '170 patent. EX1001 at 23:1-2, 21:49-52, 22:1-21 (Table 8).

187. Specifically, the use of multiple intensities per color to multiplex the detection of analytes as discussed is analogous to the assays described in the '170 Patent as non-degenerate by design:

> For example, given the 16 analytes provided in Table 8 (A-P), a single color coding scheme encoding all 16 analytes may assign the values 1, 2, 4, 8, 16, 32, 64, 128, 256, 512, 1024, 2048, 4096, 8192, and 16384 to analytes A, B, C, D, E, F, G, H, I, J, K, L, M, N, O, and P, respectively. Such a coding scheme is non-degenerate by design and the cumulative intensity result can be unambiguously decoded to indicate the presence or absence of analytes A-P.

EX1001 at 23:5-13; *see also id.* 23:1-2, 21:49-52, 22:1-21 (Table 8). In my opinion, the design described in the '170 Patent is analogous and the equivalent to that disclosed in Saxonov that utilize the same color and different intensity for analytes.

188. A POSA informed by Saxonov would have been motivated to use single color probes of different intensities that can be distinguished from one another, selecting from four colors and two or three intensities, because the resulting assay would allow non-degenerate determination of useful numbers of polynucleotide analytes while also providing the benefits of a multiplex assay. *See supra* Section X.A.2. A POSA would have had a reasonable expectation of success because using multiple single color probes of varying intensities was well-known.

9. (f) determining whether each of said [at] least five polynucleotide analytes is present, in any unique

DECLARATION

I declare that all statements made herein of my own knowledge are true and that all statements made on information and belief are believed to be true; and further that these statements were made with the knowledge that willful false statements and the like so made are punishable by fine or imprisonment, or both, under Section 1001 of Title 18 of the United States Code.

Dated: July 15, 2024 By: Carl Batt