US008497813B2

(12) **United States Patent**
Rodger et al.

(10) **Patent No.: US 8,497,813 B2**
(45) **Date of Patent: Jul. 30, 2013**

(54) **PANEL ANTENNA HAVING SEALED RADIO ENCLOSURE**

(75) Inventors: **Derek Rodger**, Fife (GB); **Matthew Ferris**, Plano, TX (US)

(73) Assignee: **Andrew LLC**, Hickory, NC (US)

(*) Notice: Subject to any disclaimer, the term of this patent is extended or adjusted under 35 U.S.C. 154(b) by 570 days.

(21) Appl. No.: **12/792,367**

(22) Filed: **Jun. 2, 2010**

(65) **Prior Publication Data**

US 2011/0032158 A1 Feb. 10, 2011

Related U.S. Application Data

(63) Continuation-in-part of application No. PCT/US2009/066345, filed on Dec. 2, 2009.

(60) Provisional application No. 61/119,114, filed on Dec. 2, 2008.

(51) **Int. Cl.**
H01Q 1/42 (2006.01)

(52) **U.S. Cl.**
USPC **343/872**; 343/702

(58) **Field of Classification Search**
USPC 343/700, 702, 872, 873
See application file for complete search history.

(56) **References Cited**

U.S. PATENT DOCUMENTS

3,495,173	A *	2/1970	Harner et al.	324/127
5,828,339	A *	10/1998	Patel	343/700 MS
6,259,933	B1 *	7/2001	Bambridge et al.	455/557
6,414,867	B2 *	7/2002	Suzuki et al.	363/141
2002/0065052	A1 *	5/2002	Pande et al.	455/67.5
2005/0104792	A1	5/2005	Asao et al.	
2006/0109188	A1	5/2006	Ikeda et al.	
2006/0250311	A1	11/2006	Bishop	
2007/0001919	A1	1/2007	Carroll et al.	
2008/0252552	A1	10/2008	Goebel et al.	

FOREIGN PATENT DOCUMENTS

WO	WO 2005-069432	A1	7/2005
WO	WO 2006-119454	A1	11/2006
WO	WO 2009/011601	A1	1/2009
WO	WO 2009-011601	A1	1/2009

OTHER PUBLICATIONS

International Search Report and Written Opinion regarding PCT/US2010/03788.

(Continued)

Primary Examiner — Tho G Phan
(74) *Attorney, Agent, or Firm* — Husch Blackwell LLP

(57) **ABSTRACT**

A panel antenna having an enclosure, an internal cover, one or more micro radios and RF modules, and a radome is provided. The enclosure may include a rectangular rear panel, side walls with an interior surface to mount micro radios and an external surface to receive heat sinks, and a hinged front cover providing an internal cover. The internal cover may also have a plurality of RF radiating modules fastened thereto. The internal cover may also provide environmental sealing and electromagnetic shielding. The plurality of micro radios are located inside the cavity of the enclosure, and each micro radio is coupled to an RF radiating module. The micro radios may be mounted inside the enclosure on the side walls. The radome encloses the RF radiating modules. The radome may be mounted to the internal seal. Additionally, the panel antenna may further include a heat sink mounted on an exterior side of the rear panel. The heat sink on the rear panel may dissipate heat from additional active electronics, such as a communications hub or calibration radio. The micro radios and active electronics may be mounted such that the heat sinks dissipate heat generated by the micro radios.

17 Claims, 10 Drawing Sheets

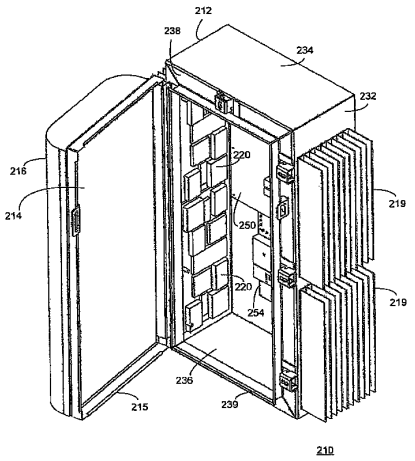

OTHER PUBLICATIONS

International Search Report and Written Opinion regarding PCT/US2009/066345.
International Search Report and Written Opinion regarding international application PCT/US2009/066345.
Supplementary European Search Report for related Application No. EP 09 83 1021 dated Jul. 4, 2012.
PCT Written Opinion for PCT/US2010/037088 dated Jun. 14, 2012.

* cited by examiner

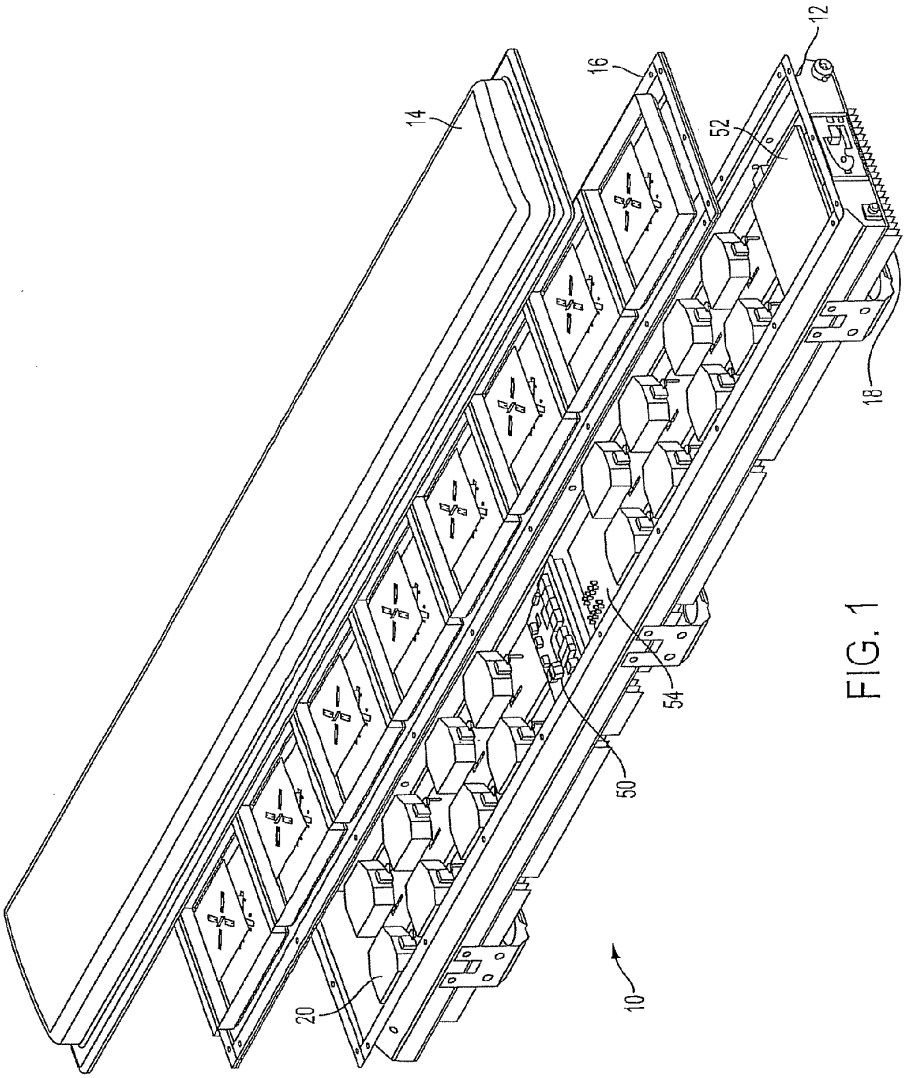

FIG. 1

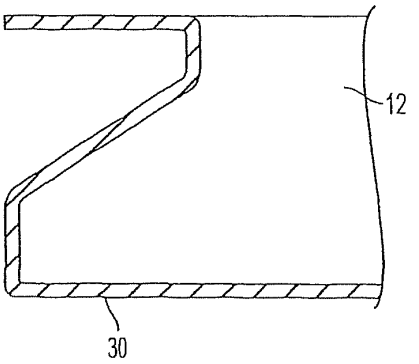

FIG. 2

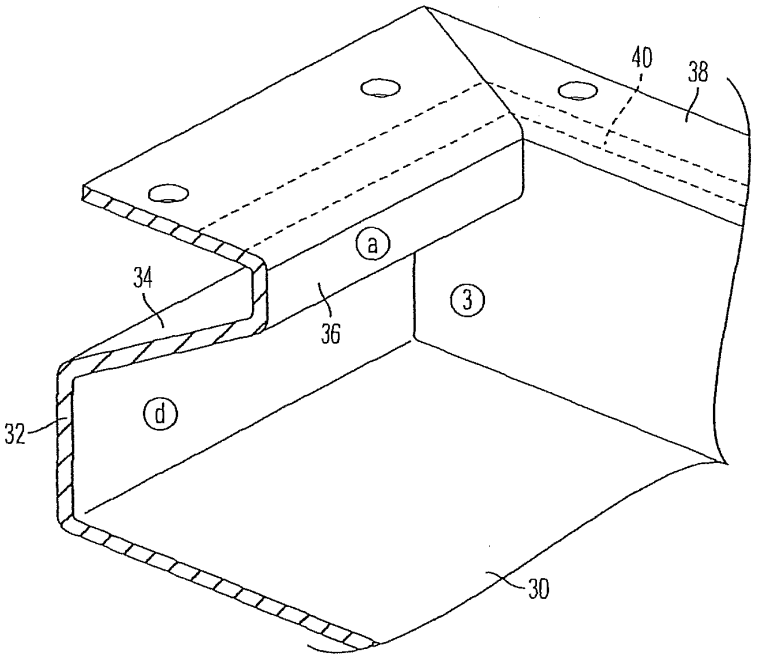

FIG. 3

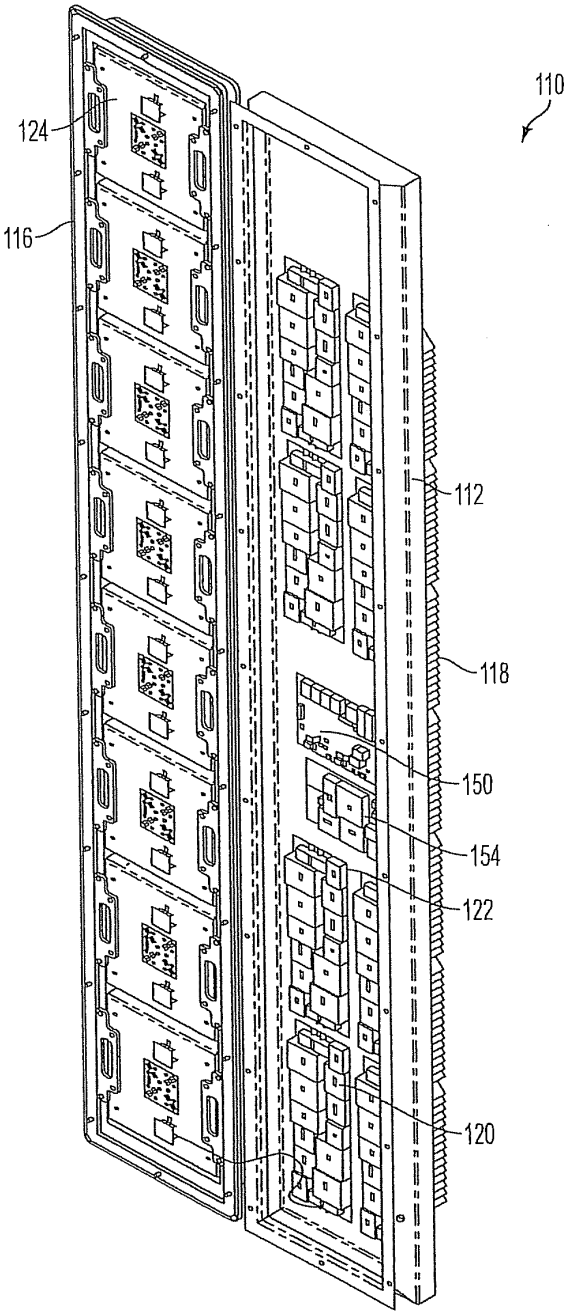

FIG. 4

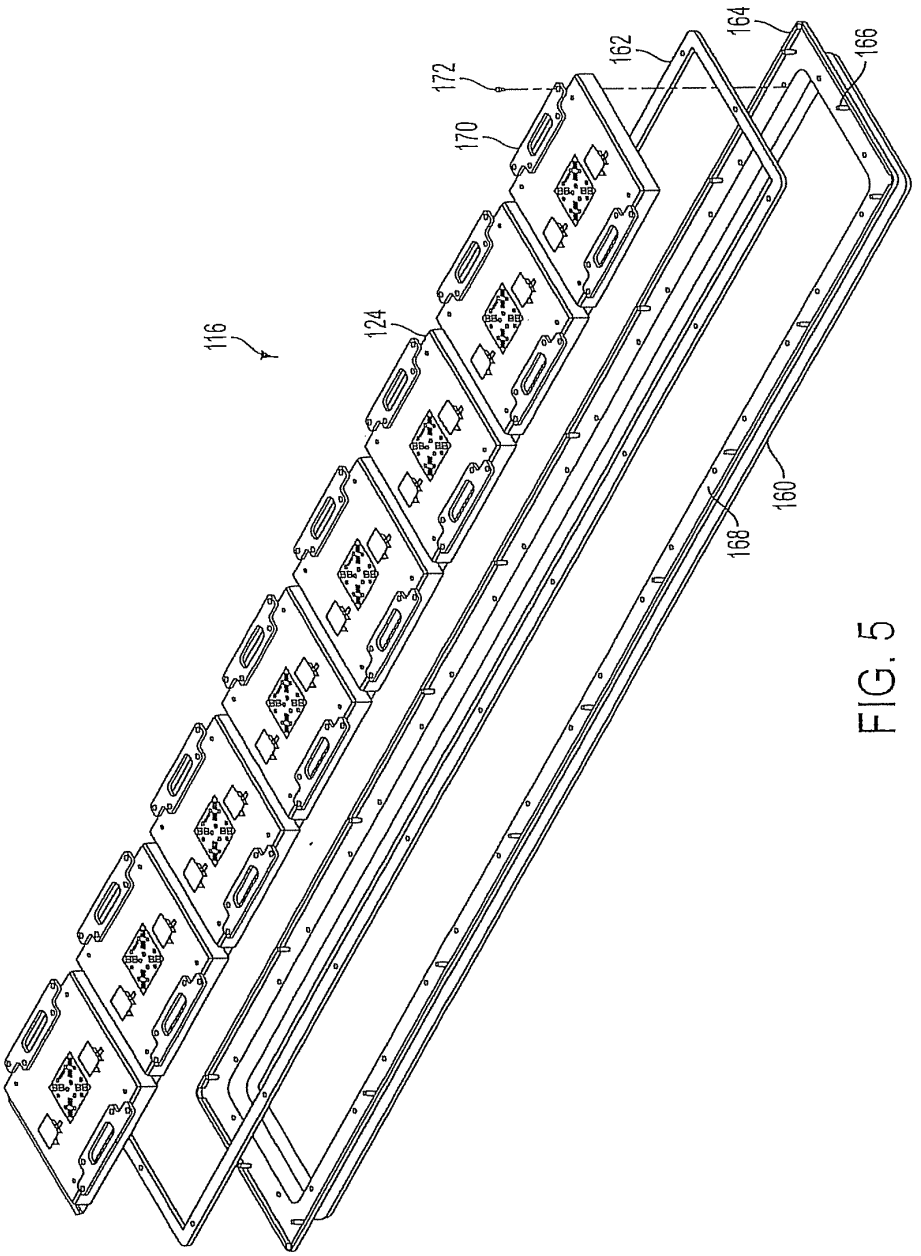

FIG. 5

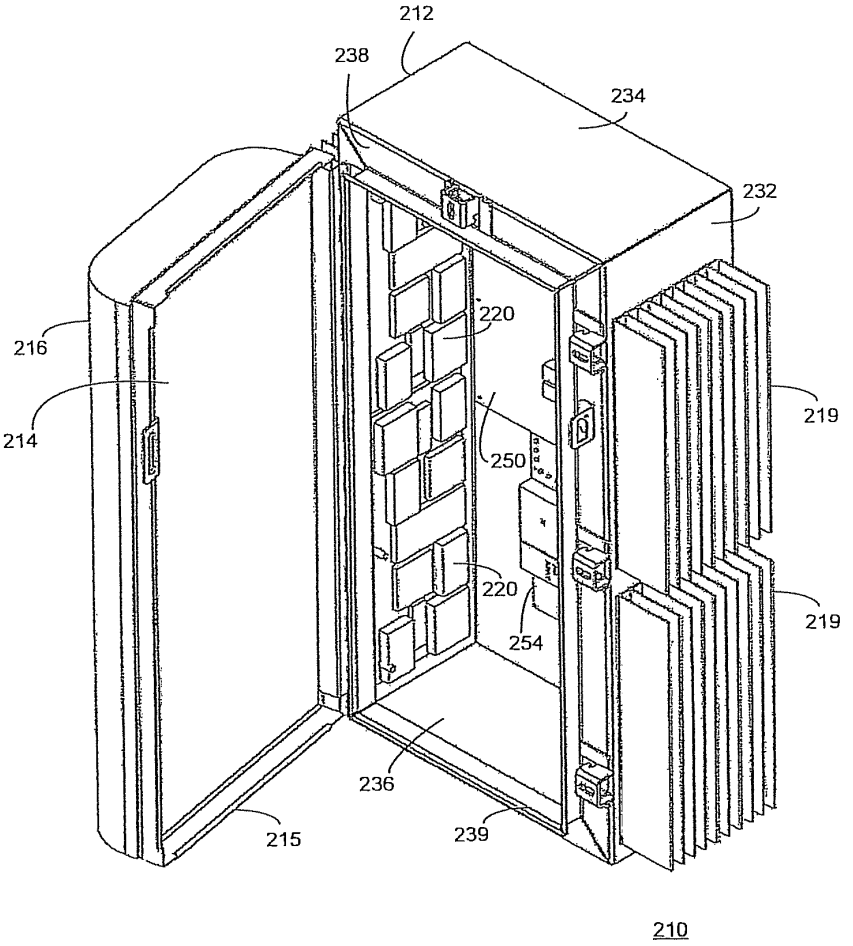

Figure 6

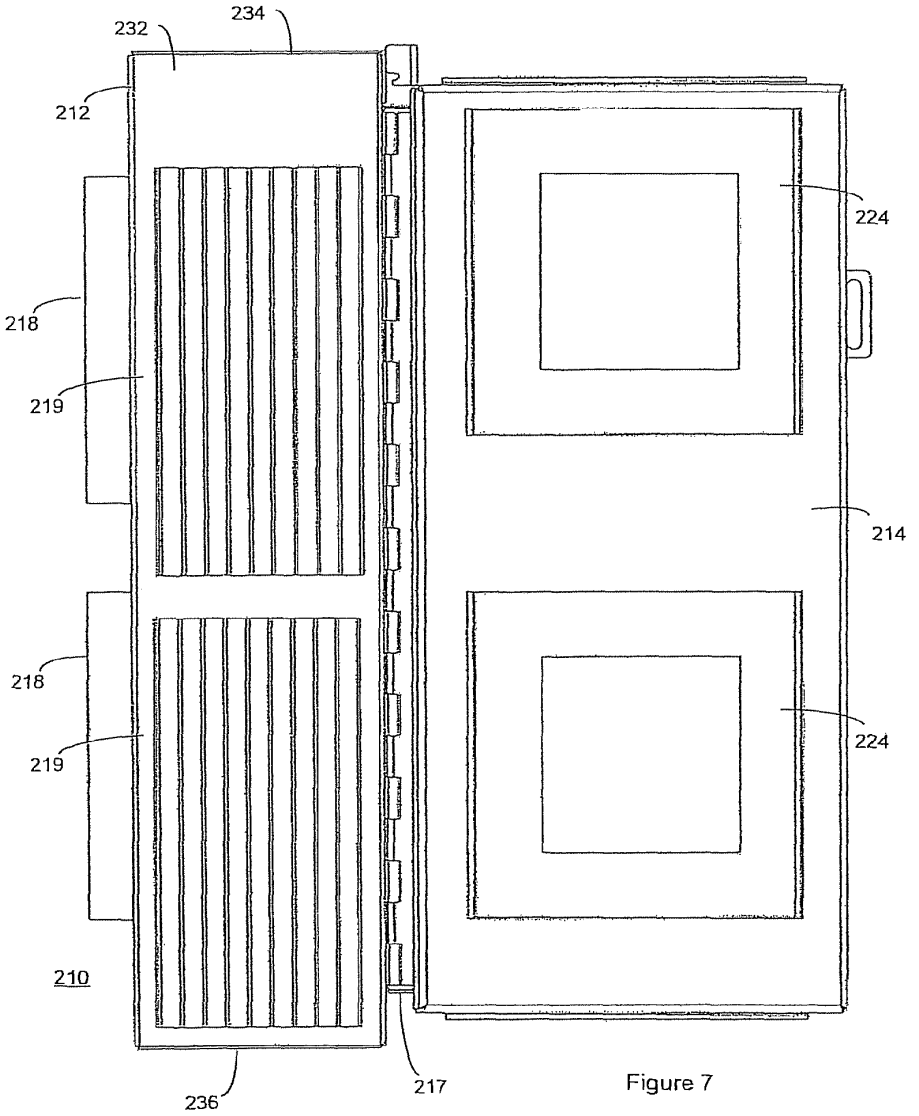

Figure 7

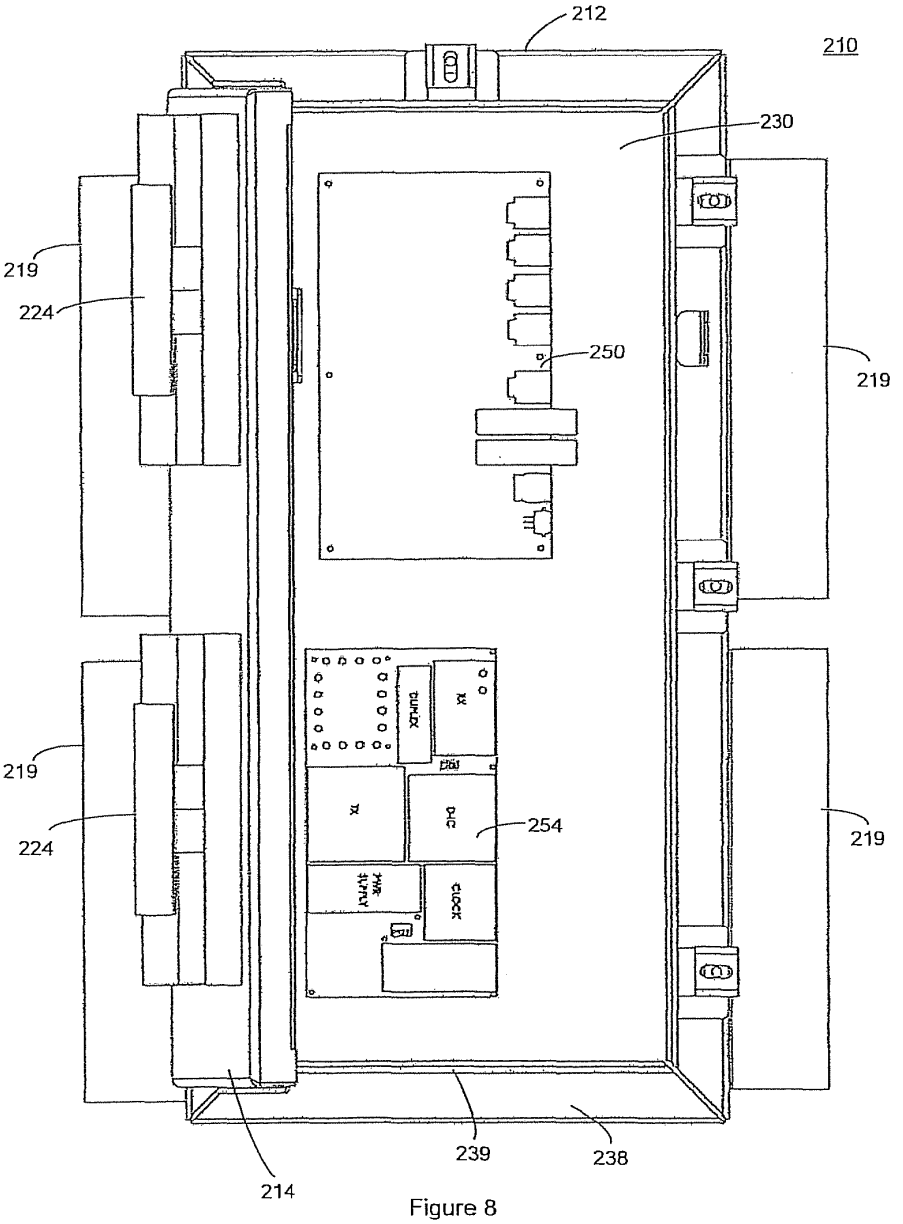

Figure 8

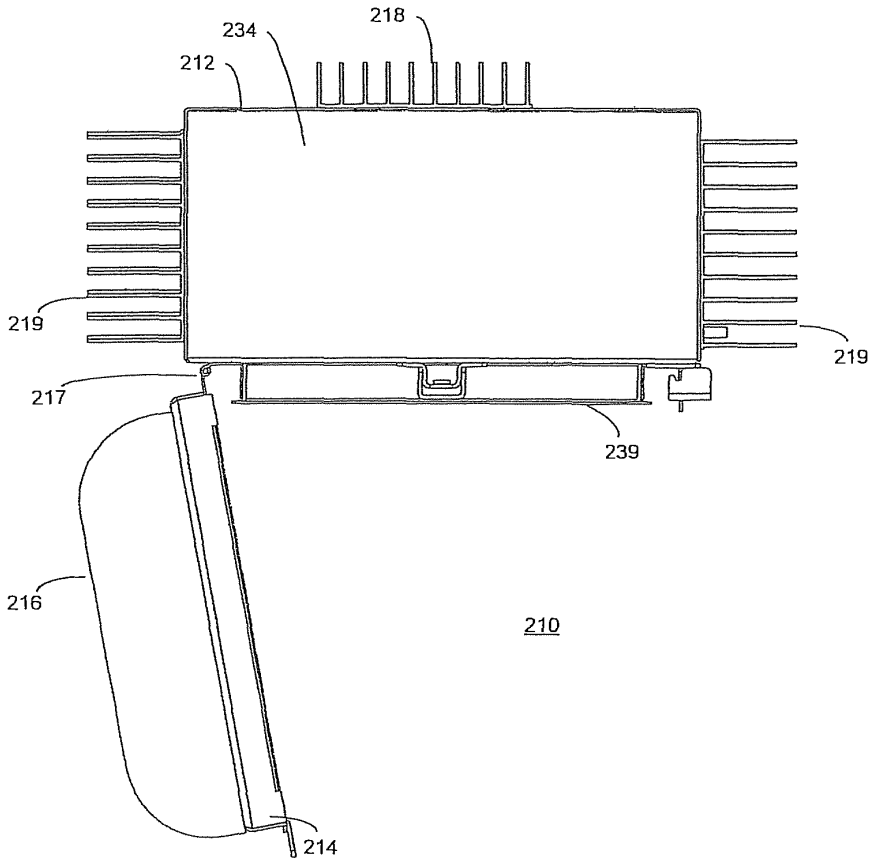

Figure 9

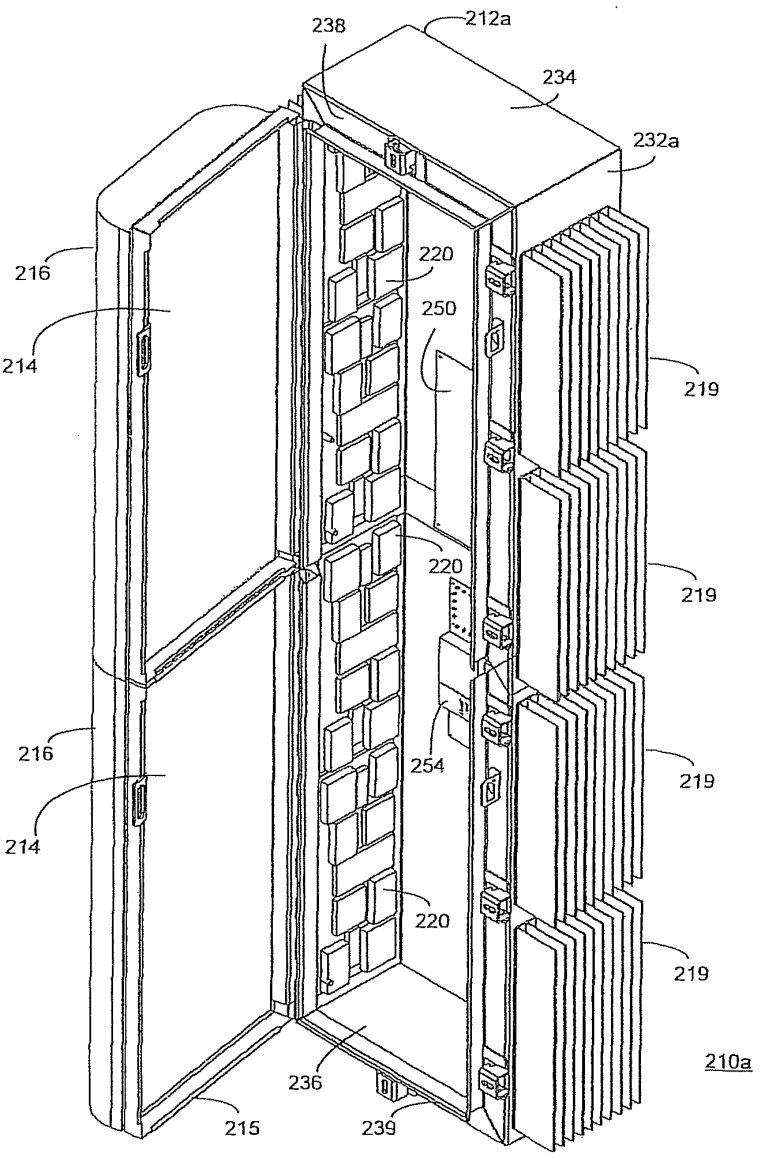
238
212a
234
232a
216
220
250
214
219
220
219
216
254
219
214
220
219
210a
236
215
239

Figure 10

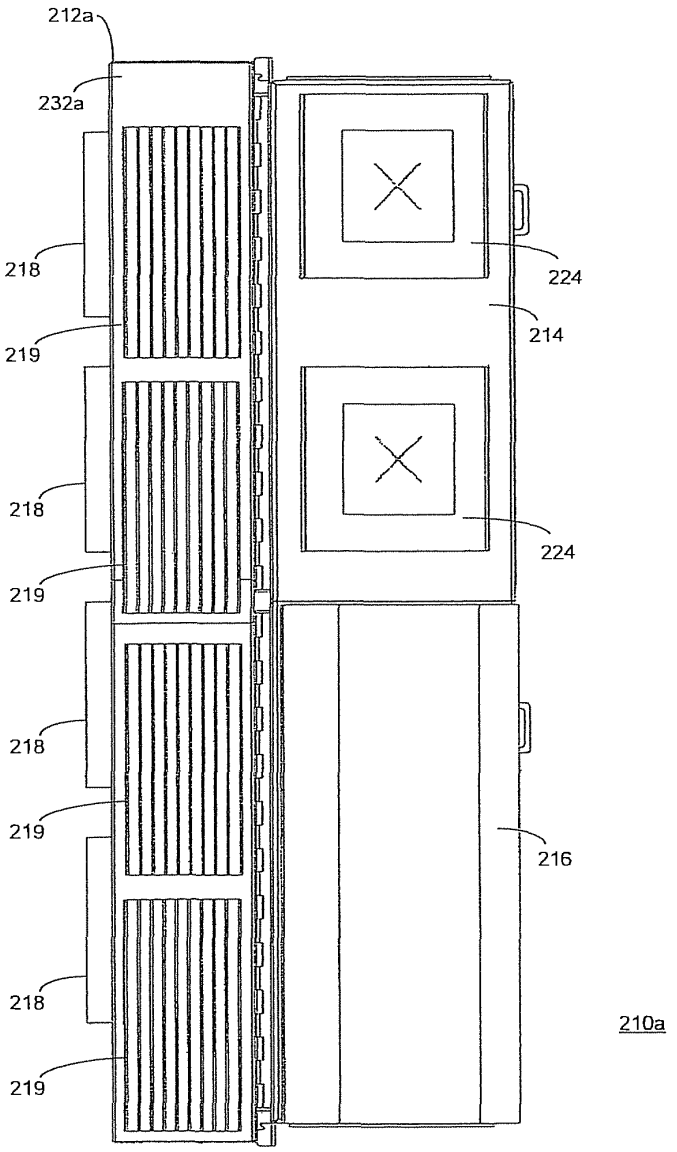

Figure 11

PANEL ANTENNA HAVING SEALED RADIO ENCLOSURE

FIELD OF THE INVENTION

The field of the invention relates generally to panel antennas used in communications applications. More particularly, the field of the invention relates to arrangements of passive and active antenna components in an multiple radiating element panel antenna.

BACKGROUND OF THE INVENTION

A typical known Cellular Telephone Base Station System comprises several elements, including one or more panel antennas, each panel antenna comprising an array of radiating elements mounted at an elevation above the ground, and base station electronics mounted remotely from the antenna arrays. The known antenna arrays typically include a plurality of radiating elements and a feed network. The radiating elements and feed network may be mounted on a panel antenna plate. See, e.g., U.S. Pat. No. 6,034,649, titled Dual Polarized Base Station Antenna. In some antennas, a ground plane for the radiating elements may be used as a part of the antenna structure. In some known panel antennas, the feed network may include power dividers, phase shifters, or other circuit devices for adjusting beam width and/or beam direction. Typically, however, such known panel antennas have feed networks which comprise passive components, and do not have active devices which perform power amplification.

Typically, the known panel antennas are driven by a Low Noise Amplifier (LNA). A LNA may be mounted on support structure for the panel antenna or located as part of a base station, comprising an environmental enclosure on the ground below the panel antenna. The LNA may be coupled to the feed network of the panel antenna by coaxial cable. Locating the LNA in the environmental enclosure at the base station facilitates protecting active electronics from the elements. However, such an arrangement also requires extensive cabling from the base station environmental enclosure to the location of the panel antenna, which may be located at a significant elevation above the base station.

Another type of panel antenna is one where individual radio elements are associated with the radiating elements. For example, international patent application WO 2008/1009421, titled "Antenna Array System," discloses an all-digital antenna array. WO 2008/1009421 is incorporated by reference. In the '421 application, a digital signal is provided to a Communications Hub. The Communications Hub distributes the digital signal to a plurality of micro radios. An antenna radiating element is associated with each micro radio. However, the '421 patent application does not consider or solve certain issues with packaging and antenna design.

For example, in prior art remote radio head antennas, the components in the panel antenna are passive and heat dissipation is not an issue. In the '421 application, however, each micro radio has a power digital to analog converter for converting the digital signal into an RF signal. This power converter generates a significant amount of heat that must be dissipated. The '421 application does not teach or suggest a way to solve the heat dissipation problem. Additionally, locating active electronic components, including power amplifiers in the panel antenna raises substantial issues regarding protecting such electronics from adverse environmental conditions, such as rain and other forms of precipitation. Protection from environmental conditions is not solved in the '421 application. Also, the '421 application does not address issues concerning electromagnetic interference, manufacturing assembly and serviceability.

SUMMARY OF THE INVENTION

According to one example of the present invention, a panel antenna may include an enclosure, an internal cover, one or more micro radios and RF modules, and a radome. The internal cover is dimensioned to overlap an aperture in the enclosure. The aperture provides access to a cavity of the enclosure. The enclosure may include a rectangular rear panel, side walls with an interior surface to mount micro radios and an external surface to receive heat sinks, and a hinged front cover providing an internal cover. The internal cover may also have a plurality of RF radiating modules fastened thereto. The internal cover may also provide environmental sealing and electromagnetic shielding. The plurality of micro radios are located inside the cavity of the enclosure, and each micro radio is coupled to an RF radiating module. The micro radios may be mounted inside the enclosure on the side walls. The radome encloses the RF radiating modules. The radome may be mounted to the internal seal.

Additionally, the panel antenna may further include a heat sink mounted on an exterior side of the rear panel. The heat sink on the rear panel may dissipate heat from additional active electronics, such as a communications hub or calibration radio. The micro radios and active electronics may be mounted such that the heat sinks dissipate heat generated by the micro radios.

In alternate examples of the present invention, a panel antenna may include an enclosure, an internal cover, a plurality of micro radios and RF modules, and a radome. The enclosure may include a rectangular rear panel, and, extending in a longitudinal direction of the enclosure, first walls extending from at least the longitudinal edges of the rear panel, second walls extending from the first walls and being angled inwardly, third walls extending from the second walls, and flange extending from the third wall portion outwardly from the cavity of the enclosure, the flange being substantially parallel with the rear panel, the flange having a mounting locations and a sealing area located between the mounting locations and the third wall portion. The first and third walls may be generally perpendicular to the rear panel. The internal cover may be dimensioned to overlap an area defined by the flange of the enclosure such that the internal cover forms an environmental seal when positioned on the sealing area of the flange. The internal cover may also have a plurality of RF radiating modules fastened thereto. The internal cover may also provide electromagnetic shielding. The plurality of micro radios are located inside the cavity of the enclosure, and each micro radio is coupled to an RF radiating module. In one example, the micro radios are mounted on the rear panel. In an alternate embodiment, the micro radios may be mounted on the first and third walls. The radome encloses the RF radiating modules.

Additionally, the panel antenna may further include a heat sink mounted on an exterior side of the rear panel. The micro radios may be mounted such that the heat sinks dissipate heat generated by the micro radios. The ends of the enclosure may be substantially flat end walls, or the shape of the longitudinal walls may be carried through to one or both of the ends of the enclosure.

A panel antenna according to another alternate example of the present invention includes an enclosure, a radome assembly, and a plurality of micro radios protected by the enclosure and the radome assembly. The enclosure may have a rear

panel, a first wall portion extending from the rear panel, a second wall portion and a third wall portion, and a flange extending outwardly from the third wall portion. The second wall portion is angled inwardly toward a cavity of the enclosure, the flange having a mounting locations and a sealing area located between the mounting locations and the third wall portion. The radome assembly may have a radome, a plurality of RF radiating modules fastened thereto, and a seal element located around a periphery of a cavity of the radome. The seal element on the radome assembly may be adapted to form a seal with the sealing area of the flange. Alternatively, the radome assembly may be attached to the enclosure by a hinge. The plurality of micro radios are located inside the enclosure, and each micro radio is coupled to one of the plurality of RF radiating modules. A plurality of micro radios may be located on a micro radio module. In one alternative example, the micro radios are mounted on interior surfaces of first and second side walls, and heat sinks are mounted on exterior surfaces of the side walls.

BRIEF DESCRIPTION OF THE DRAWINGS

FIG. **1** is an illustration of the components of one example of a panel antenna according to the present invention.

FIG. **2** is a cross-sectional diagram of one example of a housing according to the present invention.

FIG. **3** is an isometric view of a part of one example of a housing according to the present invention.

FIG. **4** illustrates another example of a panel antenna according to the present invention with the radome assembly detached.

FIG. **5** is an illustration of the components of one example of a radome assembly according to the present invention.

FIG. **6** is a perspective view of another example of a panel antenna according to another aspect of the present invention.

FIG. **7** is a side view of the panel antenna of FIG. **6**.

FIG. **8** is a front view of the panel antenna of FIG. **6**.

FIG. **9** is a top view of the panel antenna of FIG. **6**.

FIG. **10** is a perspective view of another example of a panel antenna according to another aspect of the present invention.

FIG. **11** is a side view of the panel antenna of FIG. **10**.

The present invention provides a digital Base Station Antenna that provides for protecting a plurality of micro radios from environmental conditions while providing a mechanically rigid, readily serviceable panel antenna.

DETAILED DESCRIPTION OF THE PRESENT INVENTION

Referring to FIG. **1**, in one example, a Panel Antenna **10** comprises an enclosure **12**, internal cover **14**, radome **16** and rear heat sinks **18**. As described in more detail below, the enclosure **12** may be formed from sheet metal. The Panel Antenna **10** may include a plurality of micro radios **20** mounted within the enclosure **12**. The micro radios **20** may be thermally coupled to the rear heat sinks **18**. In one aspect of the invention, described in more detail below, the internal cover **14** may include a plurality of RF modules **24**.

Referring to FIGS. **2** and **3**, the enclosure **12** comprises a rear panel **30**, a lower side wall **32**, an angled side wall **34**, an upper side wall **36**, and a flange **38**. In one example, lower side wall **32** and upper side wall **36** are perpendicular to rear panel **30** and flange **38** is parallel to the rear panel **30**. Angled side wall **34** is angled toward the interior of the enclosure. The rear panel **30**, side walls **32**, **34**, **36** and flange **38** may be formed from sheet metal. Corners, formed at the junctions of the walls may be welded. Welded corners have the benefit of preventing moisture from entering the enclosure via the corners.

The combination of the rear panel **30**, lower side wall **32**, inclined side wall **34**, upper side wall **36**, and flange **38** may be configured such that these elements, when viewed in cross section, appear in a Z-shape. In one example of the invention, this Z-shape arrangement is employed on two longitudinal sides of the enclosure, and end walls **37** are flat. In alternative examples, the Z-shape may be employed on three sides of the enclosure (e.g., two longitudinal sides and an end) or on all four sides of the enclosure. The Z-shape provides improved structural rigidity over conventional box-style structures.

In addition to enhancing rigidity, a Z-shaped sidewall enclosure provides enhanced internal space for a given outer flange dimension. For example, for a given flange dimension, the Z-shaped enclosure has more interior volume than a conventional box enclosure having an outward-turned flange of the same dimensions. An inward-turned flange may be used, however, such a flange may have additional challenges regarding sealing against adverse environmental conditions, especially moisture. Additionally, a radome may be configured to slide over and engage the outward-turned flanges, which allows installation and removal of a radome without installing or removing fasteners. This may be advantageous when servicing a Panel Antenna **10** located on a communications tower.

Flange **38** may be flat and parallel to the rear panel **30**. In one example, a flat flange **38** provides an area for facilitating a seal between flange **38** and internal cover **14**. In this example, flange **38** includes sealing area **40**. Flange **38** may also include a fastening system for the internal cover **14**.

In one example, the sealing area is located between the fastening system and a peripheral opening defined by upper side walls **36**. In this example, locating the fasteners on the flange **38** outside the sealing area eliminates the need for the fasteners themselves to be sealed or to be of a sealable design. Thus, many options are available for the fasteners. Additionally fasteners may be added after the sheet metal has been finished (e.g., painted, coated).

The Panel Antenna **10** includes a communications hub **50**, a power supply **52**, and a calibration radio **54**. In the illustrated example, interconnections between the communications hub, power supply, and calibration radio are protected from adverse environmental conditions by the enclosure **12**, internal cover **14**, and sealing area **40**.

In the example illustrated in FIG. **1**, eight RF modules **24** and sixteen micro radios **20** (each with a duplexer) are shown. Each RF module **24** is coupled to a corresponding pair of micro radios **20**. In this example, a first micro radio **20** of a pair of micro radios drives a first radiating element of the corresponding RF module **24**, and a second micro radio **20** of the pair of micro radios drives a second radiating element of the corresponding RF module **24**. This arrangement may be used, for example, where the RF modules **24** comprise dual polarized radiating elements.

Each micro radio **20** is also connected to the communications hub **50**. The communications hub **50** is connected to Base Station Equipment (BSE) (not illustrated). A digital signal may be provided by the Base Station Equipment to the communications hub **50**. For example, a fiber optic link or other digital transmission medium may provide the connection between the BSE and the communications hub **50**. Typically, the communications hub receives digital signals from the BSE, comprising information for RF transmission by the

Panel Antenna **10**, and transmits digital signals to the BSE, comprising information received by RF signal by the Panel Antenna **10**.

The connection between the communications hub **50** and each micro radio **20** may also be digital. In one example, the communications may comply with the SerDes standard. The communications hub **50** sends signals to the micro radios **20** for RF transmission, and receives signals from the micro radios **20** that correspond to RF signals received by the RF modules **24** and the micro radios **20**. The communications hub **50** may also perform amplitude and phase adjustment to control attributes of RF transmission or reception. When amplitude and phase adjustment is performed electronically, a conventional feed network having electro-mechanical power dividers and phase shifters need not be included.

In one example, a micro radio **20** may comprise a Digital Up Converter, a power Digital to Analog Converter (including a digital to RF converter). The micro radio may comprise a duplex radio, in which case it may also include a Time Division Duplex Switch, a Low Noise Analog to Digital Converter (including an RF to digital converter) and a Digital Down Converter. A Time Division Duplex Filter couples the Time Division Duplex Switch to a RF module.

Internal cover **14** may be manufactured from a sheet of aluminum. Other materials may be used for internal cover **14**. In the illustrated example, aluminum is selected because the material serves to provide both an environmental seal and an electromagnetic shield. In this example, internal cover **14** protects the micro radios **20** and other electronics in the Panel Antenna **10** from moisture and other environmental hazards, and shields the micro radios **20** and other electronics from the electromagnetic transmissions of the RF modules **24**. The RF modules **24**, as passive devices, need not be as effectively sealed from the elements as the active electronics. RF signals are carried between the RF modules **24** and micro radios **20** on cables (not shown). The cables may pass through sealed apertures in the internal cover **14**.

The internal cover **14** may also serve as a structural support for the RF modules **24**. The RF modules may include a plurality of radio frequency radiating elements. In one illustrated example, the internal cover **14** supports eight RF modules **24**. In one example, the RF modules **24** comprise patch antennas, and in particular, dual polarized patch antennas. Alternatively, the RF modules may comprise dipole or cross-dipole antenna elements. In some embodiments, radiating elements may be disposed over a pan-shaped reflector. In other embodiments, radiating elements may be disposed over a ground plane.

An example of a suitable patch antenna may be found in International Application WO 2006/135956 A1, which in incorporated by reference. In this example, a patch radiator is positioned above a ground plane and excited such that a dual polarized RF signal is produced. This may be accomplished by exciting opposite sides of the radiator in antiphase.

The internal cover **14** may be drilled to match the enclosure **12**, so that mounting hardware may join the internal cover **14** to the enclosure **12**. A seal **62** may be located over the studs in the aluminum frame. Alternatively, the seal may be located inside a periphery defined by the studs. Alternatively, two seals may be provided, a first seal over the studs, and a second seal inside a periphery defined by the studs.

The radome **16** may include flanges (not illustrated) to engage and slide over edges defined by the flange of the enclosure **12**, or the edges of the internal cover **14**, or both. Alternatively the radome **16** includes mounting apertures (not illustrated) through which fastening devices may pass.

Referring to FIGS. **4** and **5**, another example of a Panel Antenna **110** is provided. In this example of the invention, Panel Antenna **110** comprises an enclosure **112**, radome assembly **116** and rear heat sinks **118**. In this example, enclosure **112** is substantially the same as enclosure **12**, the description of which is not repeated herein. Panel Antenna **110** may include a plurality of micro radios **120** mounted within the enclosure **112**. The micro radios **120** may be grouped into radio modules **122**. The radio modules **122** may be thermally coupled to the rear heat sinks **118**. In one aspect of this example, described in more detail below, the radome assembly **116** includes a plurality of RF modules **124**.

In FIG. **5**, a radome assembly **116** is illustrated. The radome assembly **116** includes a radome **160**, a seal **162**, and a plurality of RF modules **124**. Each RF module **124** may include a plurality of RF elements. The RF elements may comprise individual modules, pairs or other groups of modules, or a plurality of RF elements in a single module. In one illustrated example, the Radome assembly of FIG. **5** includes eight RF modules. Each RF module **124** comprises one group of radiating elements.

In the example illustrated in FIG. **5**, four radio modules **122** are shown. Each micro radio module **122** in this example includes two micro radios **120**. The radio modules **122** are not limited to two micro radios, and may contain additional micro radios. Each micro radio **120** is connected to a corresponding RF module. Each micro radio **120** is also connected to the communications hub **150**. The communications hub is connected to Base Station Equipment. A digital signal may be provided by the Base Station Equipment to the communications hub. A fiber optic link or other digital transmission medium may provide the connection. The connection between the communications hub and each micro radio may also be digital.

The radome assembly **116** may include an aluminum frame **164** with studs **166**. In one example, the reflecting elements of the RF modules **124** are integrated with the aluminum frame **164**. The seal **162** may be located over the studs in the aluminum frame. Alternatively, the seal may be located inside a periphery defined by the studs. Alternatively, two seals may be provided, a first seal over the studs, and a second seal inside a periphery defined by the studs.

The radome **160** includes mounting locations **168**. In one example, the mounting locations **168** may comprise apertures through which fastening devices may pass. In one example, the RF modules **124** are located within the radome **160** with brackets **170** and screws **172**, which pass through mounting locations **168**. Alternatively, clips or bonding agents may be used to secure the RF modules **124** to radome **160**. Providing mounting locations **168** in the radome **160** helps ensure accurate positioning of the RF elements in the radome **160**.

In the illustrated example, the RF modules **124** may be installed in the radome **160** to comprise the radome assembly **116**. In this arrangement, electronic components, such as the micro radios **120**, may be accessed without disturbing the location of the RF modules **124** in the radome **160**. However, the RF modules **124** may be removed from the radome assembly **116** if service is required.

As in the earlier-described example, the RF modules **124** may comprise patch antennas, and in particular, dual polarized patch antennas. Alternatively, the RF modules may comprise dipole or cross-dipole antenna elements. In some embodiments, radiating elements may be disposed over a pan-shaped reflector. In other embodiments, radiating elements may be disposed over a ground plane.

Referring to FIGS. **6-9**, in another example, a Panel Antenna **210** may include an enclosure **212**, internal cover **214**, radome **216**, rear heat sinks **218** and side heat sinks **219**.

The enclosure **212** may be formed from sheet metal such as aluminum or steel. The Panel Antenna **210** may include a plurality of micro radios **220** mounted within the enclosure **212**. The micro radios **220** may be thermally coupled to the side heat sinks **219**. In one aspect of the invention, described in more detail below, the internal cover **214** may have a plurality of RF modules **224** mounted thereon.

FIGS. **7** and **8** illustrate panel antenna **210** without radome **216** so that RF modules **224** are visible.

The enclosure **212** comprises a rear panel **230**, side walls **232**, a top wall **234** and a bottom wall **236**. While many aspects of the previously described embodiments may be shared with the present embodiment, such as the internal environmental and RF shielding, in this example, a difference is that the side walls **232** are not Z-shaped. Instead, side walls **232** have an area sufficient to mount micro radios **220** to an internal surface and side heat sinks **219** to an external surface. micro radios **220** may be mounted on the internal surfaces of one or both of the side walls **232** of enclosure **212**.

The enclosure **212** includes an inward-turned flange **238** and an outwardly extending lip **239**. The outwardly extending lip **239** is joined to an inner periphery of flange **238**, and defines an opening through which an interior of the enclosure **212** may be accessed. Internal cover **214** has a lip **215** around its perimeter, and is dimensioned to enclose lip **239**. In one embodiment, resilient seals may be included in the interface between lip **239** and lip **215**. The resilient seals may provide environmental sealing, RF shielding, or both. Also, internal cover **214** may be attached to enclosure **212** by a hinge **217** running lengthwise along enclosure **212**, allowing internal cover **214** to swing open and closed.

Alternately, the enclosure **212** may be configured with Z-shaped walls, as illustrated in earlier embodiments, provided that the lower side walls have sufficient area on which to mount micro radios and heat sinks. The electronics of this embodiment are similar to previously-described embodiments.

The Panel Antenna **210** includes a communications hub **250**, a power supply (not illustrated), and a calibration radio **254**. Interconnections between the communications hub, power supply, and calibration radio are protected from adverse environmental conditions by the enclosure **212**, internal cover **214**, lip **215** and lip **239**. The communications hub **250**, power supply and calibration radio **254** may be mounted on rear panel **230** and be thermally coupled to rear heat sinks **218**.

In the example illustrated in FIGS. **6-9**, two RF modules **224** and four micro radios **220** are included. (FIG. **6** illustrates two micro radios **220** on a front side wall; the other two, on the internal surface of the second side wall, are not visible.) Each RF module **224** is coupled to a corresponding pair of micro radios **220**. In this example, a first micro radio **220** of a pair of micro radios drives a first radiating element of the corresponding RF module **224**, and a second micro radio **220** of the pair of micro radios drives a second radiating element of the corresponding RF module **224**. This arrangement may be used, for example, where the RF modules **224** comprise dual polarized radiating elements.

In an alternate example, illustrated in FIGS. **10-11**, four RF Modules **224** and eight micro radios **220** are included in panel antenna **210***a*. Other components sharing common reference characters are substantially the same as with the example illustrated in FIGS. **6-9**. Panel Antenna **210***a* includes an enclosure **212***a* having longer side walls **232***a* and two internal covers **214** and two radomes **216** (only one radome **216** is illustrated to allow a view of two of the radiating elements **224**.) This would allow the internal covers **214** to be opened independently of each other or at the same time. Alternately, a single internal cover and radome may be used.

Each micro radio **220** is also connected to the communications hub **250**. The communications hub **250** is connected to Base Station Equipment (BSE) (not illustrated). A digital signal may be provided by the Base Station Equipment to the communications hub **250**. For example, a fiber optic link or other digital transmission medium may provide the connection between the BSE and the communications hub **250**. Typically, the communications hub receives digital signals from the BSE, comprising information for RF transmission by the Panel Antenna **210***a*, and transmits digital signals to the BSE, comprising information received by RF signal by the Panel Antenna **210***a*.

The connection between the communications hub **250** and each micro radio **220** may be the same as described above with respect to the earlier embodiments. Additionally, the micro radios **220** may operate as described with respect to micro radios **20**, above.

Internal cover **214** may be manufactured from a sheet of aluminum. Other materials such as stainless steel and powder-coated steel may be used for internal cover **214**. The material is selected to provide both an environmental seal and an electromagnetic shield. In this example, internal cover **214** protects the micro radios **220** and other electronics in the Panel Antenna **210** or **210***a* from moisture and other environmental hazards, and shields the micro radios **220** and other electronics from the electromagnetic transmissions of the RF modules **224**. The RF modules **224**, as passive devices, need not be as effectively sealed from the elements as the active electronics. RF signals are carried between the RF modules **224** and micro radios **220** on cables (not shown). The cables may pass through sealed apertures in the internal cover **214**.

The internal cover **214** may also serve as a structural support for the RF modules **224**. The RF modules may include a plurality of radio frequency radiating elements. In one illustrated example, the internal cover **214** supports two RF modules **224**. As set forth above, in one example, the RF modules **224** comprise patch antennas, and in particular, dual polarized patch antennas. Alternatively, the RF modules may comprise dipole or cross-dipole antenna elements. In some embodiments, radiating elements may be disposed over a pan-shaped reflector. In other embodiments, radiating elements may be disposed over a ground plane. In some embodiments, internal cover **214** may serve as a ground plane or reflector.

As with the examples given above, an example of a suitable patch antenna may be found in International Application WO 2006/135956 A1, which in incorporated by reference.

While in the examples above, the internal cover **214** may be mounted to enclosure **212** by hinge **217**, other mounting arrangements for internal cover **214** are contemplated, including the internal cover **14** mounting arrangements set forth with respect to enclosure **12** above, such as a flange and seal arrangement.

The radome **216** is mounted to the internal cover **214**. Alternatively, the radome **216** may include flanges (not illustrated) to engage and slide over edges defined by a flange of the enclosure **212**, or edges of the internal cover **214**, or both. Alternatively the radome **216** includes mounting apertures (not illustrated) through which fastening devices may pass.

In an alternative embodiment, the enclosure **212** may be combined with the radio modules **122** and RF modules **124** of Panel Antenna **110**, described above. In this example, the RF modules **124** would be installed in a radome to comprise a radome assembly.

An advantage of the above examples, electronic components, such as the micro radios **220**, may be accessed without disturbing the location of the RF modules **224** with respect to the internal cover **214** or the radome **216**. However, the RF modules **224** may be removed from the radome assembly if service is required.

What is claimed is:

1. A panel antenna, comprising:

an enclosure, the enclosure including a rear panel, a first side wall, and a second side wall, a top wall and a bottom wall, the rear panel and the walls defining a cavity, the walls further defining an aperture through which the cavity of the enclosure may be accessed,

an internal cover, the internal cover being dimensioned to overlap an area defined by the aperture of the enclosure and providing an environmental seal and electromagnetic shielding for the cavity, the internal cover having at least one RF radiating module fastened to an exterior surface thereof,

at least one micro radio mounted to an internal surface of the first side wall, the micro radio being coupled to the RF radiating module;

a first heat sink, mounted to an external surface of the first side wall, and

a radome, the radome mounting to the internal cover and enclosing the RF radiating module;

wherein a flange joins the first and second side walls and the top and bottom wall, and a lip extends from the flange, further defining the aperture through which the cavity of the enclosure may be accessed, the lip being engaged by the internal cover to provide the environmental seal.

2. The panel antenna of claim **1**, wherein the panel antenna further comprises: a second micro radio, the second micro radio mounted to an internal surface of the second side wall, a plurality of RF radiating modules, a second heat sink mounted on an exterior surface of the second side wall.

3. The panel antenna of claim **2**, wherein each RF radiating element is dual polarized and is associated with two micro radios.

4. The panel antenna of claim **1**, further comprising a communications hub coupled to each micro radio.

5. The panel antenna of claim **4**, further comprising a calibration radio.

6. The panel antenna of claim **5**, wherein the communications hub and calibration radio are mounted on an interior surface of the rear panel, and a rear heat sink is mounted on an exterior surface of the rear panel.

7. The panel antenna of claim **1**, wherein a flange joins the first and second side walls and the top and bottom wall, further defining the aperture through which the cavity of the enclosure may be accessed.

8. A cellular base station antenna, comprising:

an active radio enclosure, the active radio enclosure including a rear panel, a first side wall, and a second side wall, a top wall and a bottom wall, the rear panel and the walls defining a cavity, the walls further defining an aperture through which the cavity of the active radio enclosure may be accessed;

at least one active radio component mounted inside the cavity, on the rear panel;

a heat sink mounted on an external surface of the rear panel;

an internal cover mounted to the aperture, the internal cover being dimensioned to overlap an area defined by the aperture of the active radio enclosure;

a passive radio enclosure including a radome, the passive radio enclosure being defined by the radome and an exterior surface of the internal cover; and

at least one passive radio element mounted inside the passive radio enclosure;

wherein the active radio enclosure and internal cover provide environmental sealing and electromagnetically shielding for the active radio component; and

wherein the internal cover is mounted to the active radio enclosure by a hinge, so that the active radio components may be accessed without disturbing the location of the radome or RF modules with respect to the internal cover.

9. The cellular base station antenna of claim **8**, wherein the active radio component further comprises a micro radio and the passive radio element comprises a RF module.

10. The cellular base station antenna of claim **8**, wherein the active radio component further comprises at least two micro radios and the passive radio element comprises a dual polarized RF module, wherein a first micro radio is coupled to a first radiating element of the dual polarized RF module, and a second micro radio is coupled to a second radiating element of the dual polarized RF module.

11. The cellular base station antenna of claim **8**, wherein the active radio component further comprises a plurality of micro radios and the passive radio element comprises a plurality of RF modules.

12. The cellular base station antenna of claim **8**, wherein the internal cover is fabricated from a sheet of aluminum.

13. The panel cellular base station antenna of claim **8**, wherein the active radio component further comprises:

a micro radio,

a communications hub coupled to the micro radio, and

a calibration radio.

14. The panel cellular base station antenna of claim **8**, further comprising a plurality of micro radios mounted on the first side wall and the second side wall, and wherein the active radio component further comprises a communications hub coupled to the micro radios.

15. The cellular base station antenna of claim **8**, wherein the passive radio component further comprises a plurality of RF modules mounted to the outer surface of the internal cover.

16. The cellular base station antenna of claim **8**, wherein a flange joins the first and second side walls and the top and bottom wall, and a lip extends from the flange, further defining the aperture through which the cavity of the enclosure may be accessed, the lip being engaged by the internal cover to provide the environmental seal.

17. The cellular base station antenna of claim **8**, wherein the radome of the passive radio enclosure does not provide environmental sealing or electromagnetic shielding for the passive radio element.

* * * * *