SKYWORKS®
BREAKTHROUGH SIMPLICITY

General Purpose RF Switches

Select RF switches available from stock for prototype or high-volume production

Applications

- Tx/Rx and diversity
  - WLAN/Bluetooth®
  - Energy management
  - RFID
  - UHF/VHF: public safety bands
- WCDMA handsets and data cards
- 3G/4G wireless networks
- LNB/DBS matrix
- Microwave applications up to 8 GHz

Features

- Low-insertion loss
- High isolation
- High linearity and low distortion
- High-power handling
- Broad frequency range: 20 MHz to 8 GHz
- Low bias and control-logic voltage

Skyworks Solutions offers a select group of radio frequency (RF) switches from our diverse switch offering that are in stock and ready for immediate design into various markets including handsets, infrastructure, and automotive, CATV / Satcom, smart energy, medical, military, RFID, test and measurement, and WLAN / WiMAX / WiFi.

Our select switches portfolio includes the most popular, broad-market GaAs SPST, SPDT, SP3T, SP4T and DPDT products readily available to ship from stock. These devices provide excellent performance and value while utilizing Skyworks' proven technology for high reliability. The select switches are used in a wide variety of systems, including cellular telephone handsets and base stations, WLAN front-end modules, RF/microwave test instruments, satellite TV receivers and more. All pHEMT switches are broadband by design and require DC blocking capacitors for positive voltage operation. Select switches have been fully characterized for low-frequency applications, covering the UHF and VHF ranges.

Performance characteristics include broadband operation (VHF to 8 GHz), high-power handling, high isolation, low-insertion loss, and reflective or absorptive ports when they are placed into their high-isolation states. Our lead (Pb)-free, RoHS-compliant and Green™ products are fabricated in our high volume GaAs pHEMT facility. All switches are packaged in industry-standard, plastic surface-mount packages and leverage Skyworks' extensive design knowledge, technical leadership, manufacturing expertise and superior quality.

An application engineering team is available to assist you and with your design efforts. Application notes and block diagrams are accessible on Skyworks' Web site: www.skyworksinc.com.

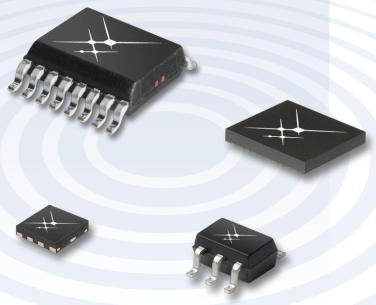

BUY NOW **Innovation to Go™**

Select products and sample/designer kits available for purchase online.

www.skyworksinc.com

Tx/Rx WLAN/Bluetooth® (802.11a,b,g,n)

Description	Insertion Loss (dB)	Isolation (dB)	Input IP3 (dBm)	Input $P_{1\,dB}$ (dBm)	Package (mm)	Part Number
SPDT (R)	0.40	23	43	30	SC-88 6L 2.1 x 2.0	AS179-92LF
SPDT (R)	0.35	24	50	30 (0.5 dB)	MLPD 6L 1 x 1	SKY13351-378LF
SPDT (R)	0.55	17	56	37	SOT 6L 2.8 x 2.9	AS193-73LF
SP3T (R)	0.60	25	50	29	QFN 8L 1.5 x 1.5	SKY13317-373LF
SP4T (R)	0.60	26	51	30	MLPD 10L 2 x 3	SKY13322-375LF
DPDT (R)	0.95	22	60	34	QFN 6L 1.5 x 1.5	SKY13318-321LF

Smart Energy, Broadband, Cellular Infrastructure, Test & Measurement, Military (COTS)

Description	Frequency (GHz)	Insertion Loss (dB)	Isolation (dB)	Input IP3 (dBm)	Input $P_{1\,dB}$ (dBm)	Package (mm)	Part Number
SPDT (R)	0.0003–2.5	0.3–0.4	25–24	48	30	SOT 6L 2.8 x 2.9	AS169-73LF
SPDT (R)	0.1–2.5	0.3–0.55	30–17	56	37 (0.1 dB)	SC-88 6L 2.1 x 2.0	SKY13270-92LF
SPDT (A)	0.1–6.0	0.8–1.5	62–42	46	30	QFN 16L 4 x 4	SKY13286-359LF
SPDT (R)	3.0–8.0	0.7–0.9	25–22	47	26	QFN 8L 2 x 2	SKY13298-360LF
SP3T (A)	0.5–2.5	0.9–1.2	62–55	43	30	QFN 20L 5 x 5	SKY13277-355LF
SP4T (A)	0.5–3.0	0.4–0.9	45–25	40	26	SSOP 16L 6 x 4.9	AS204-80LF

DBS/LNB 4 x 2 Matrix Switch

Description	Frequency (GHz)	Insertion Loss (dB)	Isolation (dB)	Input $P_{1\,dB}$ (dBm)	Package (mm)	Part Number
LNB/DBS (A)	0.25–2.15	7.5–8.5	40–31	15	QFN 20L 4 x 4	SKY13272-340LF

UHF/VHF

Description	Insertion Loss f = 48 MHz (dB)	Isolation f = 48 MHz (dB)	Input $P_{1\,dB}$ f = 48 MHz (dBm)	Insertion Loss f = 1 GHz (dB)	Isolation f = 1 GHz (dB)	Input $P_{1\,dB}$ f = 1 GHz (dBm)	Package (mm)	Part Number
SPDT (R)	0.15	56	29	0.3	25	34	SC-88 6L 2.1 x 2.0	AS179-92LF
SPDT (R)	0.2	55	28	0.35	24	30 (0.5 dB)	MLPD 6L 1 x 1	SKY13351-378LF
SPDT (R)	0.3	47	33	0.45	24	37 (0.1 dB)	SC-88 6L 2.1 x 2.0	SKY13270-92LF
SPDT (R)	0.3	42	38.5 (0.1 dB)	0.4	29	38.5 (0.1 dB)	QFN 12L 3 x 3	SKY13299-321LF
SPDT (R)	0.3	44	39.8 (0.8 dB)	0.45	23	40.5 (0.1 dB)	MLPD 6L 2 x 3	SKY13290-313LF
SP3T (R)	0.3	49	26	0.45	27	29	QFN 6L 1.5 x 1.5	SKY13317-373LF
SP4T (R)	0.3	49	26	0.6	28	30	MLPD 10L 2 x 3	SKY13322-375LF
SP4T (R)	0.3	54	41	0.45	24	38 (0.1 dB)	QFN 16L 3 x 3	SKY14151-350LF

SPDT = Single pole double throw
SP3T = Single pole three throw
SP4T = Single pole four throw
DPDT = Double pole double throw
R = Reflective
A = Absorptive (terminated)

Skyworks Green™ products are compliant to all applicable materials legislation and are halogen-free.
For additional information, refer to Skyworks Definition of Green™, document number SQ04-0074.

RF Switch Fundamentals

A switching field effect transistor (FET) functions as a three port device, where the source and drain ports form a conduction path or channel for the RF signal and the gate port controls whether the channel is opened or closed. A DC control voltage applied to the gate is required to create this function. Most switching FETs use a depletion mode configuration, which means that the channel is normally in its low resistance state with no voltage applied and in its high resistance state when a negative voltage is applied to the gate with respect to the drain and source. For positive control voltage operation, RF ground connections must be floated by inserting a DC block between the FET and ground. Also, DC blocks are required on the RF ports (see Figure 1).

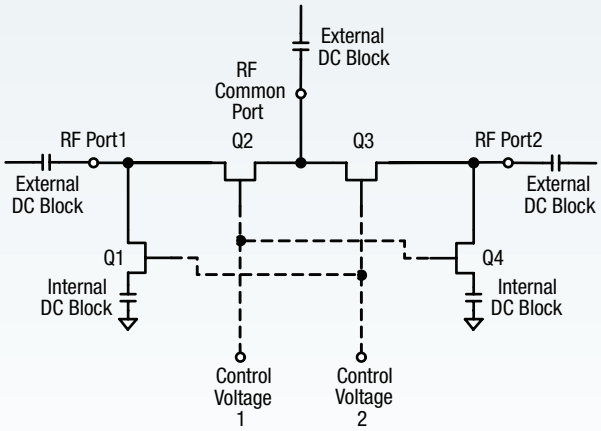

Figure 1. Typical SP2T with Series-Shunt Configuration

A complete switch can be fabricated by arranging FETs in various configurations depending upon the performance requirements of the end application. Figure 1 shows a typical single pole two-throw (SP2T) switch comprised of series and shunt FETs. In the isolation state, the shunt FET (e.g., Q1) is biased to produce a very low resistance, thus its input impedance is a reflective short. The series FET(e.g., Q2) in the same arm is biased to produce a very high resistance. In the low insertion loss state, the converse is true: the shunt FET is biased to produce a very large resistance, while its series FET is biased to produce very low resistance. Please refer to the "Published Articles" section available on Skyworks' Web site (www.skyworksinc.com/Press_Published_Articles.aspx) for more information about FET switch topologies and properties:

- Ultra-Miniature High Linearity SPDT Switch for WLAN Applications
- Top Considerations When Buying or Specifying an RF Switch
- RF/Microwave Solid State Switches: Part 1
- Solid State RF/Microwave Switch Technology: Part 2

Skyworks also offers switches with a 50 Ω absorptive termination connected between the shunt FET(s) and AC ground. In Table 1, Skyworks switches are designated with "R" for reflective and "A" for absorptive.

Figure 2 illustrates the error vector magnitude (EVM) performance of low, medium, and high power switches. EVM is a typical specification to measure the amplitude and phase distortion with modulated signals such as WLAN 802.11a,b,g,n with a 10 dB peak to average ratio.

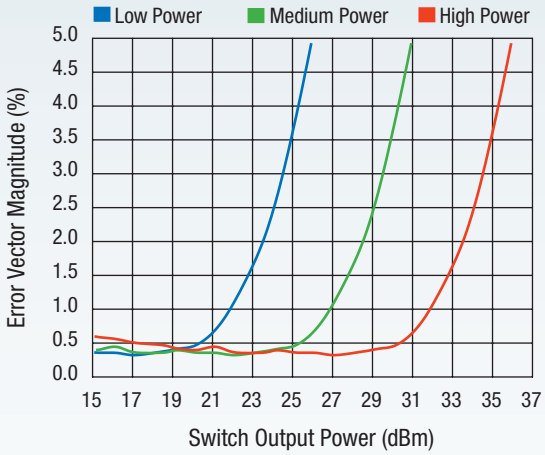

Figure 2. Error Vector Magnitude of Typical Low, Medium, and High Power Switches

Transmit-Receive Switch

A SPDT switch can be used as a transmit-receive (Tx/Rx) switch, to alternately connect a transmitter and a receiver to a common single antenna in a single duplex system, as shown in Figure 3.

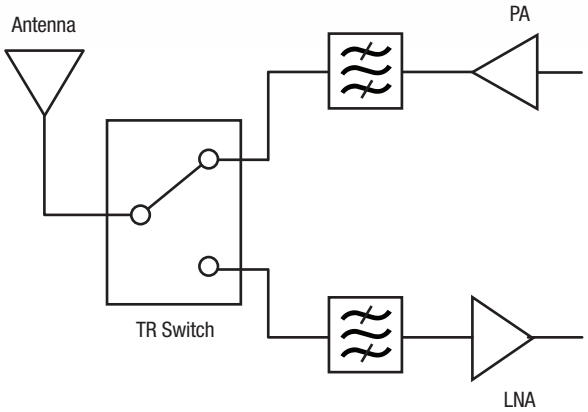

Figure 3. Simplified TR Switching Block Diagram

www.skyworksinc.com

USA

Headquarters
Skyworks Solutions, Inc.
20 Sylvan Road
Woburn, MA 01801
Telephone: (781) 376 3000
Fax: (781) 376 3100
sales@skyworksinc.com

Skyworks Solutions, Inc.
5221 California Avenue
Irvine, CA 92617
Telephone: (949) 231 3000
Fax: (949) 231 3206
kirat.hatzfeld@skyworksinc.com

Skyworks Solutions, Inc.
5520 Adamstown Road
Adamstown, MD 21710
Telephone: (301) 695 9400
Fax: (301) 695 7065
transtech@skyworksinc.com

EUROPE

Skyworks Solutions, Inc.
Parallelvej 10
Lyngby 2800, Denmark
Telephone: +45 45267945
Fax: +45 45267710
jan.thoning@skyworksinc.com

Skyworks Solutions, Inc.
34 Avenue Franklin Roosevelt
Suresnes 92150, France
Telephone: +00 33 1 41443660
Fax: +00 33 1 41443661
irene.pfeiffer@skyworksinc.com

Skyworks Solutions, Ltd.
Abbey Manor Business Centre
The Abbey
Preston Road,
Yeovil, Somerset BA20 2EN
UK
Telephone: +44 1935 848546
Fax: +44 1935 431269
mike.carroll@skyworksinc.com

Skyworks Solutions, Inc.
Keilasatama 3
02150 Espoo
Finland
Telephone: +358 925107131
tommi.hiilos@skyworksinc.com

ASIA • PACIFIC

China
Skyworks Solutions Commercial
(Shenzhen) Co., Ltd. Shanghai Branch
Room 2901-02, Chong Hing
Finance Center,
No.288 Nanjing Road (W),
Shanghai, 200003 China
Telephone: +86 21 23066230
Fax: +86 21 33663398
elaine.zhao@skyworksinc.com

Skyworks Solutions, Inc.
Room 05, 11/F, Tower 2,
Kerry Plaza
No. 1 Zhongxinsi Road
Futian District
Shenzhen 518048 PRC
Telephone: +86 755 8291 3788
ext. 60017
Fax: +86 755 8293 1633
sabrina.chen@skyworksinc.com

Skyworks Solutions, Inc.
Suite 1212, COFCO, No. 8
Jianguomennei Avenue
Dongcheng District
Beijing, 100005 PRC
Telephone: +8610 652 60859
ext. 61608
Fax: +8610 852 98350
david.qi@skyworksinc.com

Japan
Skyworks Solutions, Inc.
3-20-2 Nishi-Shinjuku
Shinjuku-ku
Opera City Tower
Tokyo, 163-1436
Japan
Telephone: +81 3 5308 5180
Fax: +81 3 5308 5190
ahihiro.karikomi@skyworksinc.com

Korea
Skyworks Solutions, Inc.
648-19, Yeoksam-Dong
Seoul, Korea 135-911
Telephone: +822 3490 3816
christine.cho@skyworksinc.com

Singapore
Skyworks Solutions, Inc.
Centennial Tower
3 Temasek Avenue
Office #21-25
Singapore 039190
Telephone: +65 65497113
peter.gan@skyworksinc.com

Taiwan
Skyworks Solutions, Inc.
4 F, #198, Section 2
Tun Hwa. S. Road
Taipei 106, Taiwan ROC
Telephone: +8862 5559 8990
Fax: +8662 2735 6508
diana.wang@skyworksinc.com

Skyworks Solutions, Inc.
20 Sylvan Road, Woburn, MA 01801
USA: (781) 376-3000 • Asia: 886 2 2735 0399
Europe: 33 (0)1 41443660 • Fax: (781) 376-3100
Email: sales@skyworksinc.com • **www.skyworksinc.com**

BRO378-10B ♻Printed on Recycled Paper.

SKYWORKS®