DATA SHEET

# SKY14151-350LF: 20 MHz-2.5 GHz High Power SP4T Switch With Decoder

## Applications

- GSM/WCDMA/EDGE datacards and handsets
- Mobile high power switching systems

## Features

- Broadband frequency range: 20 MHz to 2.5 GHz
- Low insertion loss: 0.40 dB @ 1 GHz, 0.45 dB @ 2 GHz with high isolation (29 dB @ 1 GHz)
- $V_{DD}$: 2.5 to 3.0 V for high power applications; can be used down to 1.8 V for low power applications
- High linearity IMD < –111 dBm over phase
- Good harmonic performance < –80 dBc @ 0.9 GHz
- Low voltage logic compatible (minimum $V_{HIGH}$ = 1.8 V)
- Small, QFN (16-pin, 3 x 3 mm) package (MSL1, 260 °C per JEDEC J-STD-020)

NEW

Skyworks Green™ products are RoHS (Restriction of Hazardous Substances)-compliant, conform to the EIA/EICTA/JEITA Joint Industry Guide (JIG) Level A guidelines, are halogen free according to IEC-61249-2-21, and contain <1,000 ppm antimony trioxide in polymeric materials.

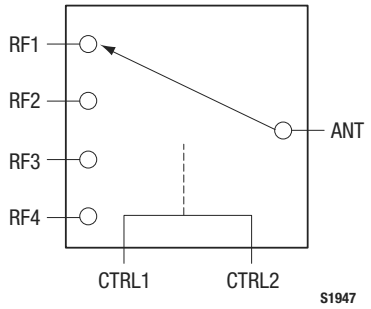


**Figure 1. SKY14151-350LF Block Diagram**

## Description

The SKY14151-350LF is a symmetrical, single-pole, four-throw (SP4T) switch. The device is designed for broadband, high power switching applications that demand high linearity and low insertion loss. This is a general purpose switch optimized for a variety of multimode applications such as GSM/WCDMA/EDGE.

The switch is manufactured using Skyworks state-of-the-art pHEMT process. The SKY14151-350LF features integrated logic that uses only two control lines for switch operation. The low current consumption makes the device suitable for battery-operated applications.

The SKY14151-350LF SP4T switch is provided in a compact Quad Flat No-Lead (QFN) 3 x 3 mm package. A functional block diagram is shown in Figure 1. The pin configuration and package are shown in Figure 2. Signal pin assignments and functional pin descriptions are provided in Table 1.

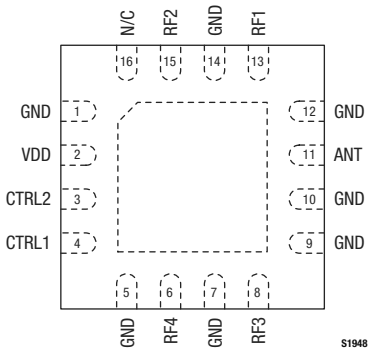


**Figure 2. SKY14151-350LF Pinout – 16-Pin QFN (Top View)**




EX-1031
Kangxi Communication Technologies (Shanghai) Co., Ltd. v. Skyworks Solutions, Inc.

**Table 1. SKY14151-350LF Signal Descriptions**

| Pin # | Name | Description | Pin # | Name | Description |
|---|---|---|---|---|---|
| 1 | GND | Ground | 9 | GND | Ground |
| 2 | VDD | Supply voltage input. The voltage may be switched. The switching time must be no longer than the start-up time. | 10 | GND | Ground |
| 3 | CTRL2 | Control signal 2. The logic level applied to this pin, along with the logic level applied to pin 4, controls the state of the switch. | 11 | ANT | Antenna. This pin is connected directly and exclusively to pin 6, 8, 13, or 15 depending on the control voltage applied to pins 3 and 4. A DC blocking capacitor is required. |
| 4 | CTRL1 | Control signal 1. The logic level applied to this pin, along with the logic level applied to pin 3, controls the state of the switch. | 12 | GND | Ground |
| 5 | GND | Ground | 13 | RF1 | RF output 1. This pin is either connected directly to or is disconnected from pin 11, depending on the control voltage applied to pins 3 and 4. A DC blocking capacitor is required. |
| 6 | RF4 | RF output 4. This pin is either connected directly to or is disconnected from pin 11, depending on the control voltage applied to pins 3 and 4. A DC blocking capacitor is required. | 14 | GND | Ground |
| 7 | GND | Ground | 15 | RF2 | RF output 2. This pin is either connected directly to or is disconnected from pin 11, depending on the control voltage applied to pins 3 and 4. A DC blocking capacitor is required. |
| 8 | RF3 | RF output 3. This pin is either connected directly to or is disconnected from pin 11, depending on the control voltage applied to pins 3 and 4. A DC blocking capacitor is required. | 16 | N/C | No connection. |

**Table 2. SKY14151-350LF Absolute Maximum Ratings**

| Parameter | Symbol | Minimum | Maximum | Units |
|---|---|---|---|---|
| Supply voltage | $V_{DD}$ | | 3 | V |
| Input power (20 MHz to 2.5 GHz, $V_{DD}$ = 2.5 to 3.0 V) | $P_{IN}$ | | +36 | dBm |
| Control voltage | CTRL1, CTRL2 | | 3 | V |
| Operating temperature | $T_{OP}$ | –40 | +85 | °C |
| Storage temperature | $T_{STG}$ | –50 | +100 | °C |

**Note:** Exposure to maximum rating conditions for extended periods may reduce device reliability. There is no damage to device with only one parameter set at the limit and all other parameters set at or below their nominal value. Exceeding any of the limits listed here may result in permanent damage to the device.

***CAUTION**: Although this device is designed to be as robust as possible, Electrostatic Discharge (ESD) can damage this device. This device must be protected at all times from ESD. Static charges may easily produce potentials of several kilovolts on the human body or equipment, which can discharge without detection. Industry-standard ESD precautions should be used at all times.*



EX-1031
Kangxi Communication Technologies (Shanghai) Co., Ltd. v. Skyworks Solutions, Inc.

## Functional Description

The SKY14151-350LF is comprised of a CMOS decoder that enables two TTL-compatible DC lines to control four RF ports. The decoder is internally connected to a GaAs pHEMT RF switch. Depending on the logic voltage level applied to the control pins, the ANT pin is connected to one of four switched RF outputs (RF1, RF2, RF3, or RF4) by a low insertion loss path, while maintaining a high isolation path to the alternate port.

Startup time is defined as the time from when $V_{DD}$ is applied to when the switch is active. Once the startup time has passed, the control voltages CTRL1 and CTRL2 can be applied. RF power should not be applied during the startup time or damage to the device could result.

The recommended startup sequence is:

Step 1: Apply $V_{DD}$.

Step 2: Apply CTRL1 and CTRL2

Step 3: Apply RF input.

The device must be turned off in the reverse order.

When $V_{DD}$ is not applied, the device is considered off or inactive. All arms of the switch remain on in this state, creating a poor four-way power splitter. The return loss of all RF ports is very low in this state. RF should not be applied when $V_{DD}$ is not present and should only be used to conserve current.

## Electrical and Mechanical Specifications

The absolute maximum ratings of the SKY14151-350LF are provided in Table 2. Electrical specifications are provided in Table 3.

The state of the SKY14151-350LF is determined by the logic provided in Table 4.

Typical performance characteristics of the SKY14151-350LF are illustrated in Figures 3 through 10.

Figure 11 illustrates the test setup used to measure data for 3rd Order Intermodulation Distortion (IMD3) testing. Figure 12 illustrates the test setup used to measure triple beat ratio data.

**Table 3. SKY14151-350LF Electrical Specifications (1 of 3) (Note 1)**
**($V_{DD}$ = 2.65 V, CTRL1 = CTRL2 = $V_{DD}$, $T_{OP}$ = +25 °C, All Unused RF Ports are Terminated in a 50 Ω Load, Unless Otherwise Noted)**

| Parameter | Symbol | Test Condition | Min | Typical | Max | Units |
|---|---|---|---|---|---|---|
| ***RF Specifications*** | | | | | | |
| Insertion loss | IL | 0.02 to 1.0 GHz<br>1.0 to 2.0 GHz<br>2.0 to 2.1 GHz | | 0.40<br>0.45<br>0.50 | 0.50<br>0.60<br>0.60 | dB<br>dB<br>dB |
| Isolation | ISO | 0.02 to 1.0 GHz<br>1.0 to 2.0 GHz<br>2.0 to 2.1 GHz | 26<br>19<br>19 | 29<br>24<br>23 | | dB<br>dB<br>dB |
| Return loss | \|S11\| | 0.02 to 2.5 GHz, all RF ports, insertion loss state | | 15 | | dB |
| Second harmonic | 2fo | $f_{FUND}$ = 900 MHz, $P_{IN}$ = +34.5 dBm | –75 | –80 | | dBc |
| | | $f_{FUND}$ = 0.12 GHz, $P_{IN}$ = +10 dBm | –75 | –80 | | dBc |
| | | $f_{FUND}$ = 0.4 GHz, $P_{IN}$ = +10 dBm | –80 | –90 | | dBc |
| | | $f_{FUND}$ = 1.8 GHz, $P_{IN}$ = +31.5 dBm | –70 | –85 | | dBc |
| Third harmonic | 3fo | $f_{FUND}$ = 900 MHz, $P_{IN}$ = +34.5 dBm | –70 | –80 | | dBc |
| | | $f_{FUND}$ = 0.12 GHz, $P_{IN}$ = +10 dBm | –80 | –90 | | dBc |
| | | $f_{FUND}$ = 0.4 GHz, $P_{IN}$ = +10 dBm | –80 | –90 | | dBc |
| | | $f_{FUND}$ = 1.8 GHz, $P_{IN}$ = +31.5 dBm | –70 | –80 | | dBc |



EX-1031
Kangxi Communication Technologies (Shanghai) Co., Ltd. v. Skyworks Solutions, Inc.

**Table 3. SKY14151-350LF Electrical Specifications (2 of 3) (Note 1)**
**($V_{DD}$ = 2.65 V, CTRL1 = CTRL2 = $V_{DD}$, $T_{OP}$ = +25 °C, All Unused RF Ports are Terminated in a 50 Ω Load, Unless Otherwise Noted)**

| Parameter | Symbol | Test Condition | Min | Typical | Max | Units |
|---|---|---|---|---|---|---|
| ***RF Specifications (continued)*** | | | | | | |
| Input 0.1 dB compression point | P0.1dB | @ 48 MHz<br>@ 900 MHz<br>@ 1.8 GHz | <br>+37.0<br>+34.0 | +38.5<br>+38.0<br>+35.0 | | dBm<br>dBm<br>dBm |
| 3rd Order Intermodulation Distortion | IMD3 | $f_{FUND}$ = 1.95 GHz @ +20 dBm, $f_{BLK}$ = 1.76 GHz @ –15 dBm, $f_{RX}$ = 2.14 GHz, worst case over phase. See Figure 9. | | –111 | | dBm |
| Power handling under mismatch | | @ 900 MHz, VSWR = 20:1<br>@ 1.8 GHz, VSWR = 20:1 | | +34.5<br>+31.5 | | dBm<br>dBm |
| 2nd Order Input Intercept Point | IIP2 | f0 = 836.61 MHz @ +26 dBm, f2 = 1718.22 MHz @ –20 dBm, measured @ 881.61 MHz | | +113.5 | | dBm |
| Switching speed | | 10/90% RF rise/fall time | | 5 | | µs |
| Startup time | | Wait time required from when $V_{DD}$ is applied until control voltage can be applied | | 25 | | µs |
| Triple beat ratio (matched) | 3BR | f1 = 1880 MHz, P1 = +21.5 dBm, f2 = 1881 MHz, P2 = +21.5 dBm, $f_{JAMMER}$ = 1960 MHz, $P_{JAMMER}$ = –30 dBm, measured @ 1959 MHz and 1961 MHz for worst case, 50 Ω load | +81 | +82 | | dBc |
| | | f1 = 891.025 MHz @ +14 dBm, f2 = 892.025 MHz, P2 = +14 dBm, $f_{JAMMER}$ = 836.0125 MHz, $P_{JAMMER}$ = –30 dBm, measured @ 835.0125 MHz and 837.0125 MHz for worst case, 50 Ω load | +81 | +82 | | dBc |
| | | f1 = 825.995 MHz, P1 = +21.5 dBm, f2 = 826.995 MHz, P2 = +21.5 dBm, $f_{JAMMER}$ = 870.995 MHz, $P_{JAMMER}$ = –30 dBm, measured @ 869.995 MHz and 871.995 MHz for worst case, 50 Ω load | +81 | +82 | | dBc |



EX-1031
Kangxi Communication Technologies (Shanghai) Co., Ltd. v. Skyworks Solutions, Inc.

**Table 3. SKY14151-350LF Electrical Specifications (3 of 3) (Note 1)**
**($V_{DD}$ = 2.65 V, CTRL1 = CTRL2 = $V_{DD}$, $T_{OP}$ = +25 °C, All Unused RF Ports are Terminated in a 50 Ω Load, Unless Otherwise Noted)**

| Parameter | Symbol | Test Condition | Min | Typical | Max | Units |
|---|---|---|---|---|---|---|
| ***RF Specifications (continued)*** | | | | | | |
| Triple beat ratio (2:1 VSWR) | 3BR | $f_1$ = 1880 MHz, $P_1$ = +21.5 dBm, $f_2$ = 1881 MHz, $P_2$ = +21.5 dBm, $f_{JAMMER}$ = 1960 MHz, $P_{JAMMER}$ = –30 dBm, measured @ 1959 MHz and 1961 MHz for worst case over phase, 2:1 VSWR load | +81 | +82 | | dBc |
| | | $f_1$ = 891.025 MHz, $P_1$ = +14 dBm, $f_2$ = 892.025 MHz, $P_2$ = +14 dBm, $f_{JAMMER}$ = 836.0125 MHz, $P_{JAMMER}$ = –30 dBm, measured @ 835.0125 MHz and 837.0125 MHz for worst case over phase, 2:1 VSWR load | +81 | +82 | | dBc |
| | | $f_1$ = 825.995 MHz, $P_1$ = +21.5 dBm, $f_2$ = 826.995 MHz, $P_2$ = +21.5 dBm, $f_{JAMMER}$ = 870.995 MHz, $P_{JAMMER}$ = –30 dBm, measured @ 869.995 MHz and 871.995 MHz for worst case over phase, 2:1 VSWR load | +81 | +82 | | dBc |
| ***DC/Control Specifications*** | | | | | | |
| Switched supply voltage (Note 2) | $V_{DD}$ | | 1.8 | 2.0 | 3.00 | V |
| Switched supply current | $I_{DD}$ | | | 0.3 | | mA |
| Control voltage:<br>High<br>Low | CTRL1, CTRL2 | | 1.80 (Note 3) | <br>2.65<br>0 | <br>3.00<br>0.3 | <br>V<br>V |
| Control current:<br>High<br>Low | $I_{CTL}$ | | | <br>0.5<br>0.5 | | <br>µA<br>µA |

**Note 1**: Performance is guaranteed only under the conditions listed in this Table.

**Note 2:** For best receiver sensitivity, $V_{DD}$ is recommended to be between 1.8 and 2.0 V with CTRL1/2 (high) no larger than $V_{DD}$.

**Note 3**: For 1.8 V control, $V_{DD}$ must be ≤ 2.65 V.



EX-1031
Kangxi Communication Technologies (Shanghai) Co., Ltd. v. Skyworks Solutions, Inc.

**Table 4. SKY14151-350LF Truth Table**

| State | CTRL1 (Pin 4) | CTRL2 (Pin 3) | RF Path |
|---|---|---|---|
| 1 | $V_{LOW}$ | $V_{LOW}$ | ANT to RF1 |
| 2 | $V_{LOW}$ | $V_{HIGH}$ | ANT to RF2 |
| 3 | $V_{HIGH}$ | $V_{LOW}$ | ANT to RF3 |
| 4 | $V_{HIGH}$ | $V_{HIGH}$ | ANT to RF4 |

**Note**: $V_{HIGH}$ = 1.8 V to $V_{DD}$
$V_{LOW}$ = 0 to 0.3 V
Any state other than described in this Table places the switch into an undefined state.

## Typical Performance Characteristics

**($V_{DD}$ = 2.5 to 3.0 V, CTRL1 = CTRL2 = $V_{DD}$, $T_{OP}$ = +25 °C, All Unused RF Ports are Terminated in a 50 Ω Load, Unless Otherwise Noted)**

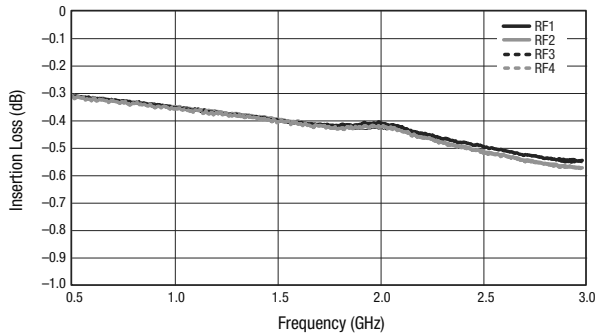


**Figure 3. Insertion Loss vs Frequency**

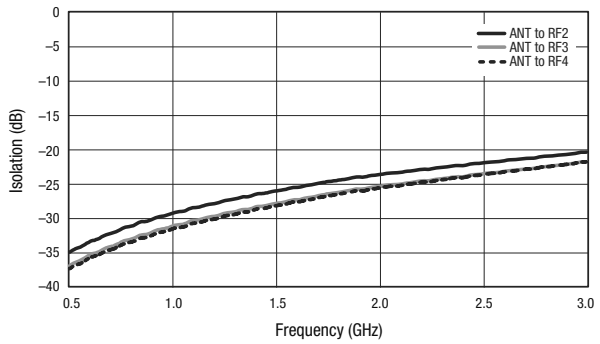


**Figure 4. Isolation vs Frequency (ANT to RF1 Insertion Loss State)**

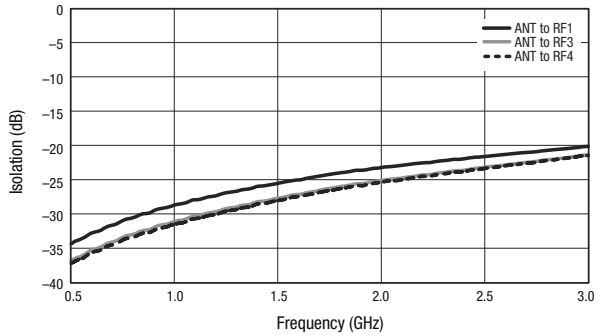


**Figure 5. Isolation vs Frequency (ANT to RF2 Insertion Loss State)**

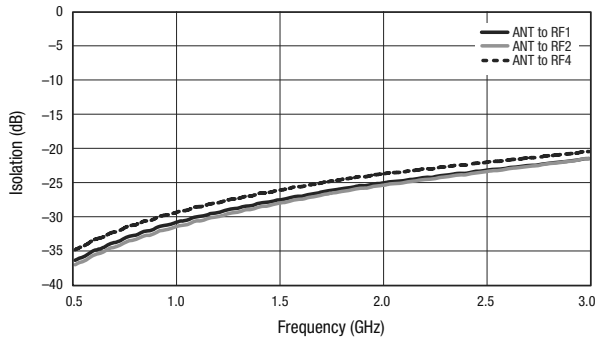


**Figure 6. Isolation vs Frequency (ANT to RF3 Insertion Loss State)**



EX-1031
Kangxi Communication Technologies (Shanghai) Co., Ltd. v. Skyworks Solutions, Inc.

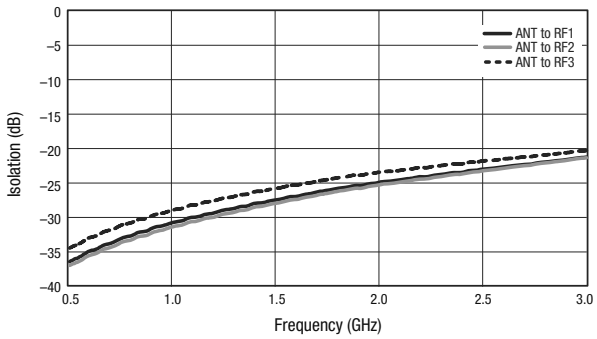


**Figure 7. Isolation vs Frequency (ANT to RF4 Insertion Loss State)**

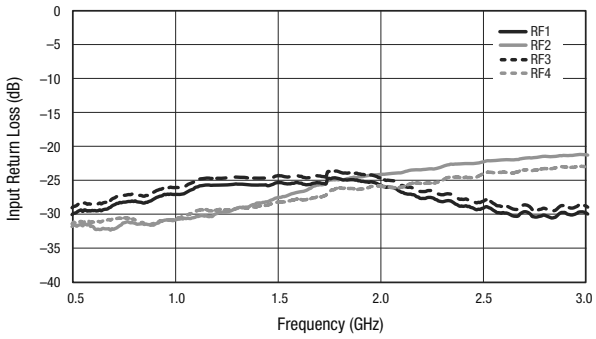


**Figure 8. Input Return Loss vs Frequency**

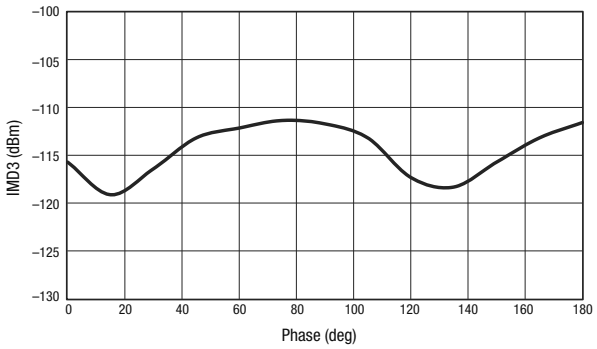


**Figure 9. 3rd Order Intermodulation Distortion vs Phase**

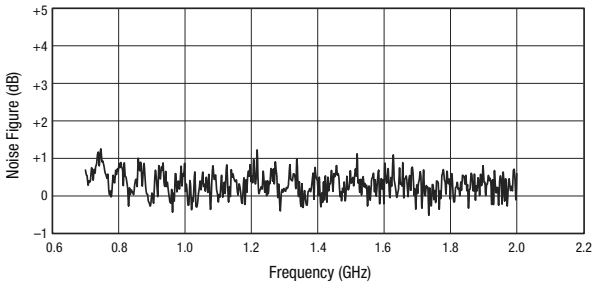


*Note: For best receiver sensitivity, VDD is recommended to be between 1.8 and 2.0 V with CTRL1/2 (high) no larger than VDD.*

**Figure 10. Typical Noise Figure vs Frequency ($V_{DD}$ = 2 V, CTRL1/2 = 1.8 V)**

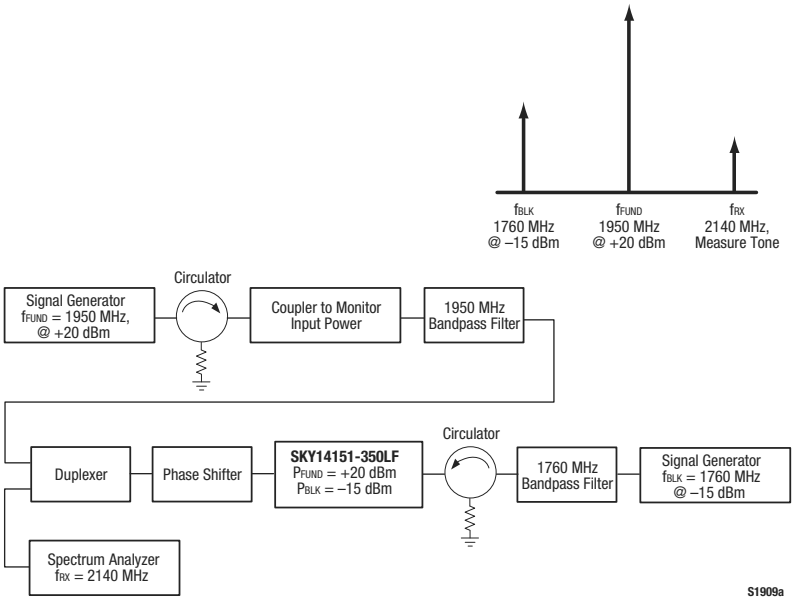


**Figure 11. 3rd Order Intermodulation Test Setup**



EX-1031
Kangxi Communication Technologies (Shanghai) Co., Ltd. v. Skyworks Solutions, Inc.

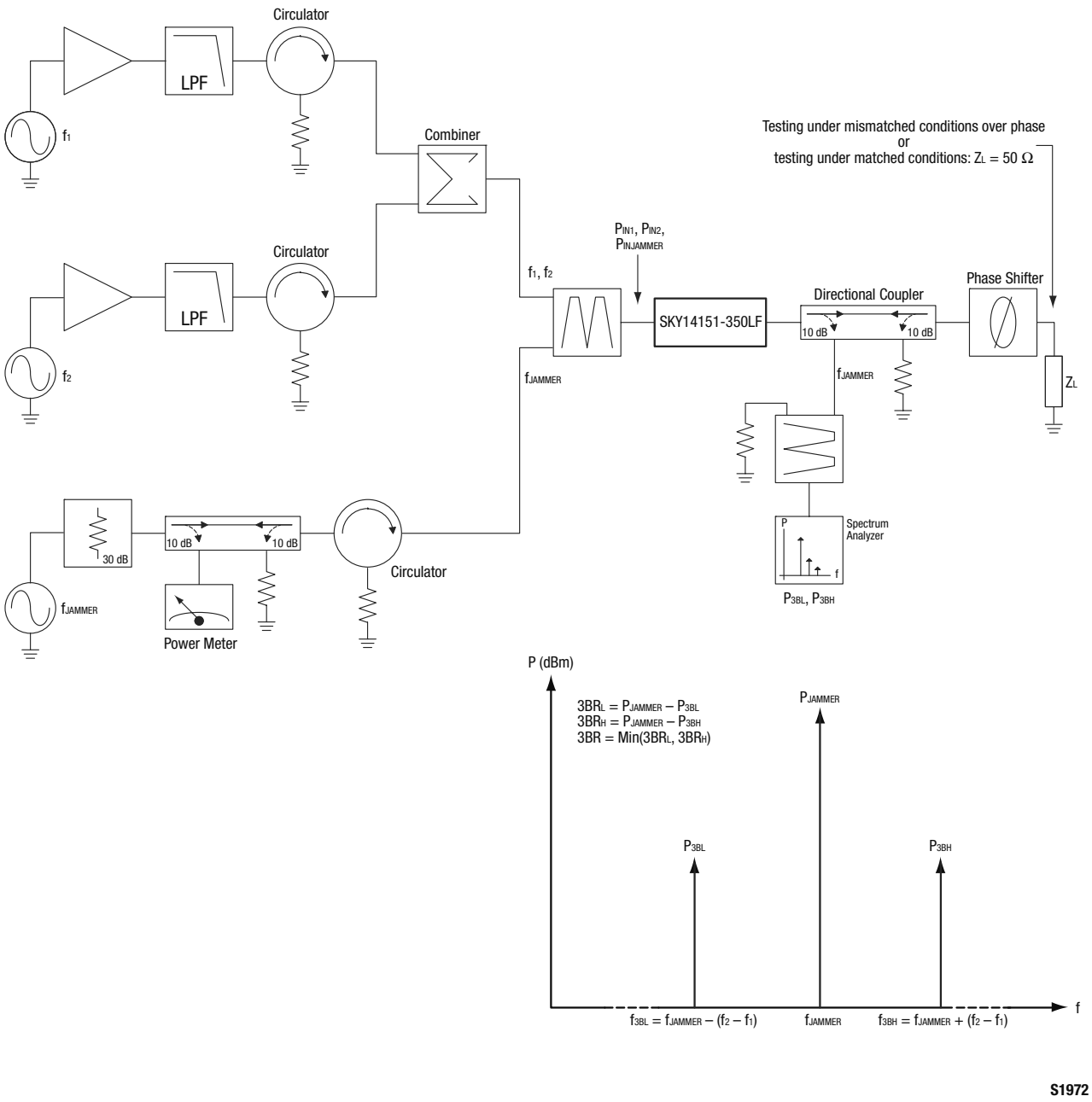


**Figure 12. Triple Beat Ratio (3BR) Test Setup**

## Evaluation Board Description

The SKY14151-350LF Evaluation Board is used to test the performance of the SKY14151-350LF SP4T Switch. An Evaluation Board schematic diagram is provided in Figure 13. An assembly drawing for the Evaluation Board is shown in Figure 14.

Components C3 and L1 constitute an ESD filter. This topology and the component values noted in Figure 13 may vary according to the ESD requirement and acceptable insertion loss for a specific application.

Decoupling capacitors (C3 through C6) are recommended to suppress noise and to prevent RF leakage into the DC control circuits.

DC blocking capacitors C1, C2, C7, C8, and C9 determine the low frequency operation of the switch. Increase the capacitor values to lower operation frequency.



EX-1031
Kangxi Communication Technologies (Shanghai) Co., Ltd. v. Skyworks Solutions, Inc.

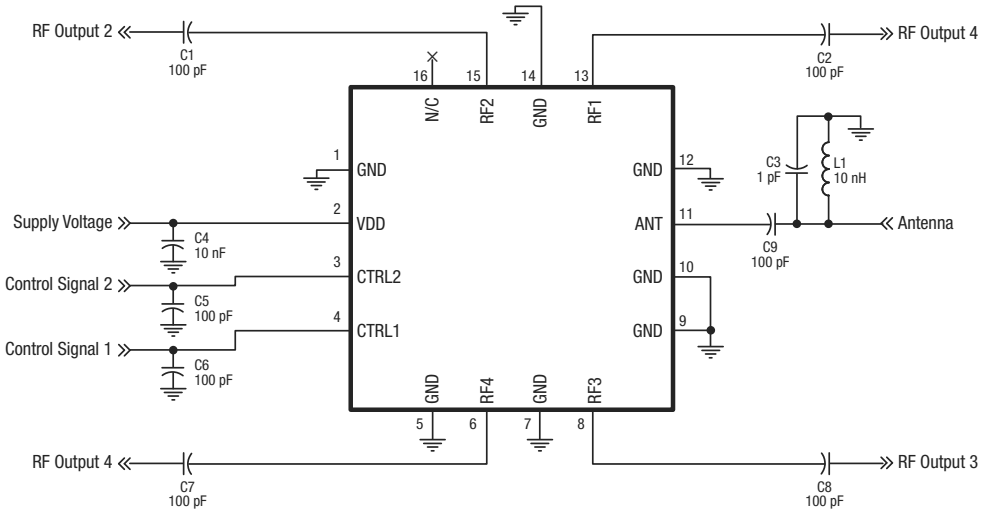


*Note: Some component labels may be different than the corresponding component symbol shown here. Component values, however, are accurate as of the date of this Data Sheet.*

*Use 10 nF DC blocking capacitors (C1, C2, C7, C8, and C9) for <50 MHz operation.*

S1950

**Figure 13. SKY14151-350LF Evaluation Board Schematic**

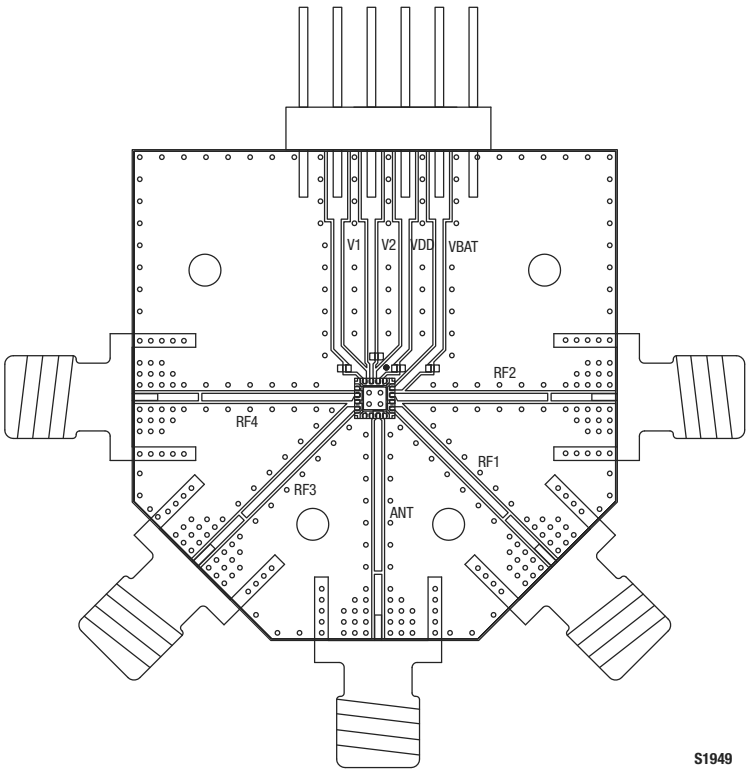


S1949

**Figure 14. SKY14151-350LF Evaluation Board Assembly Diagram**



EX-1031
Kangxi Communication Technologies (Shanghai) Co., Ltd. v. Skyworks Solutions, Inc.

## Package Dimensions

The PCB layout footprint for the SKY14151-350LF is provided in Figure 15. Typical case markings are shown in Figure 16. Package dimensions for the 16-pin QFN are shown in Figure 17, and tape and reel dimensions are provided in Figure 18.

## Package and Handling Information

Instructions on the shipping container label regarding exposure to moisture after the container seal is broken must be followed. Otherwise, problems related to moisture absorption may occur when the part is subjected to high temperature during solder assembly.

THE SKY14151-350LF is rated to Moisture Sensitivity Level 1 (MSL1) at 260 °C. It can be used for lead or lead-free soldering.

Care must be taken when attaching this product, whether it is done manually or in a production solder reflow environment. Production quantities of this product are shipped in a standard tape and reel format.

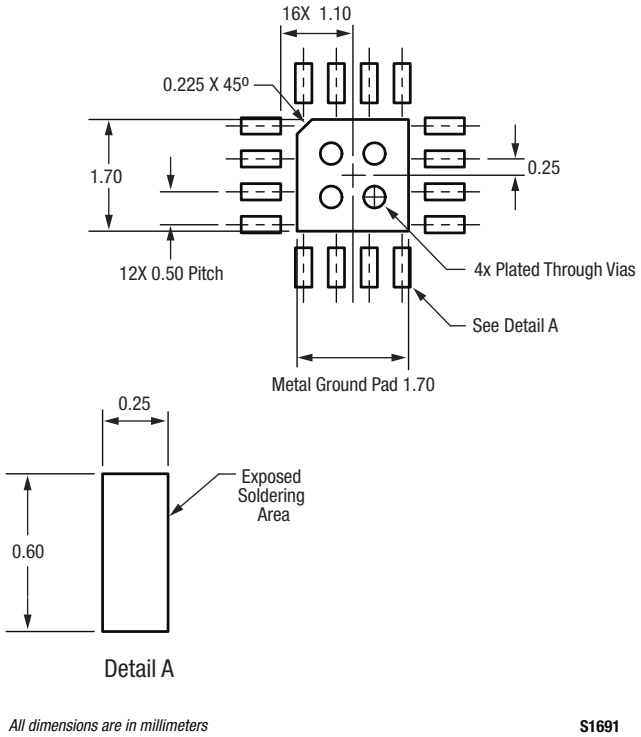


**Figure 15. SKY14151-350LF PCB Layout Footprint (Top View)**



EX-1031
Kangxi Communication Technologies (Shanghai) Co., Ltd. v. Skyworks Solutions, Inc.

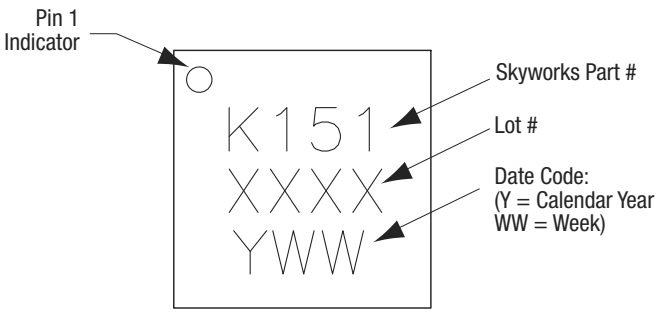


**Figure 16. Typical Case Markings (Top View)**

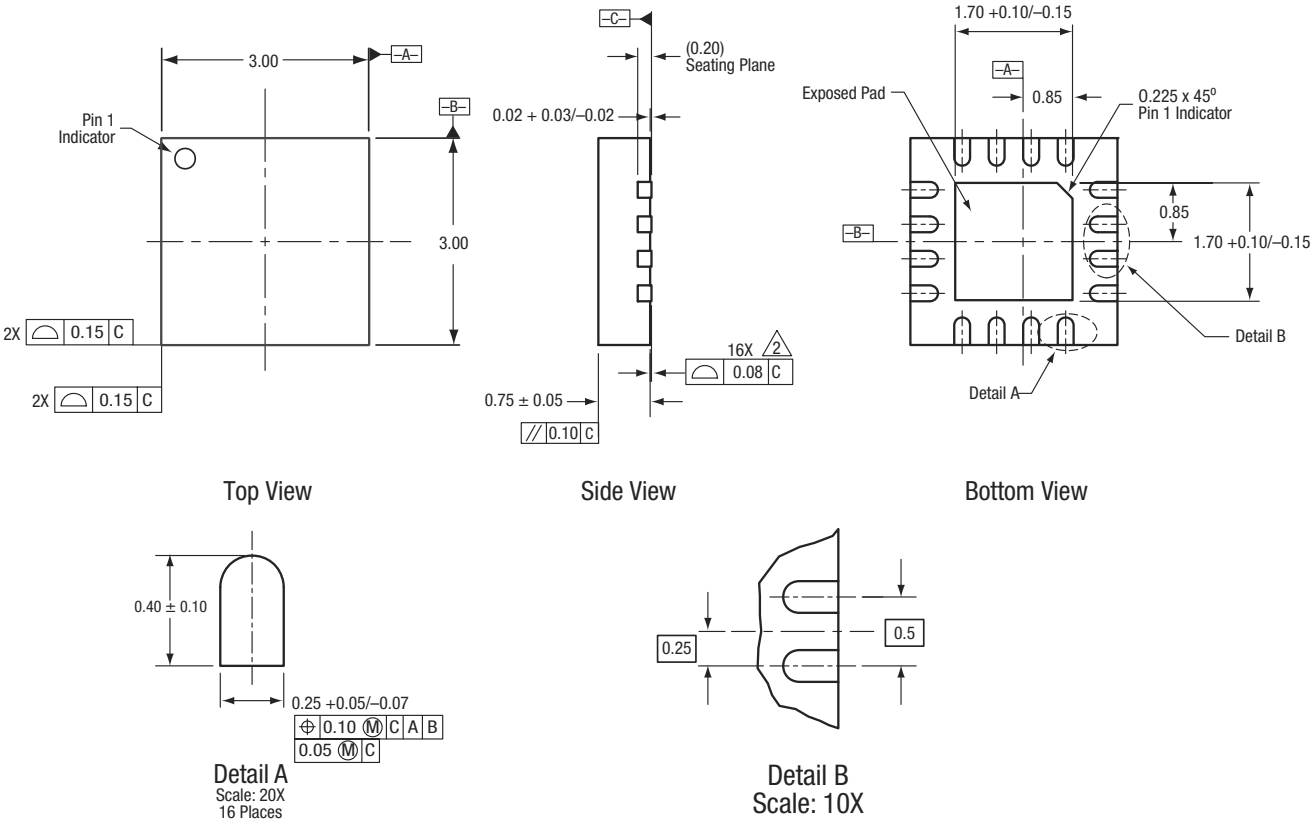


*All measurements are in millimeters.*
*Dimensioning and tolerancing according to ASME Y14.5M-1994.*
*Coplanarity applies to the exposed heat sink slug as well as the terminals..*
*Plating requirement per source control drawing (SCD) 2504.*

S1692

**Figure 17. SKY14151-350LF 16-Pin QFN Package Dimensions**



EX-1031
Kangxi Communication Technologies (Shanghai) Co., Ltd. v. Skyworks Solutions, Inc.

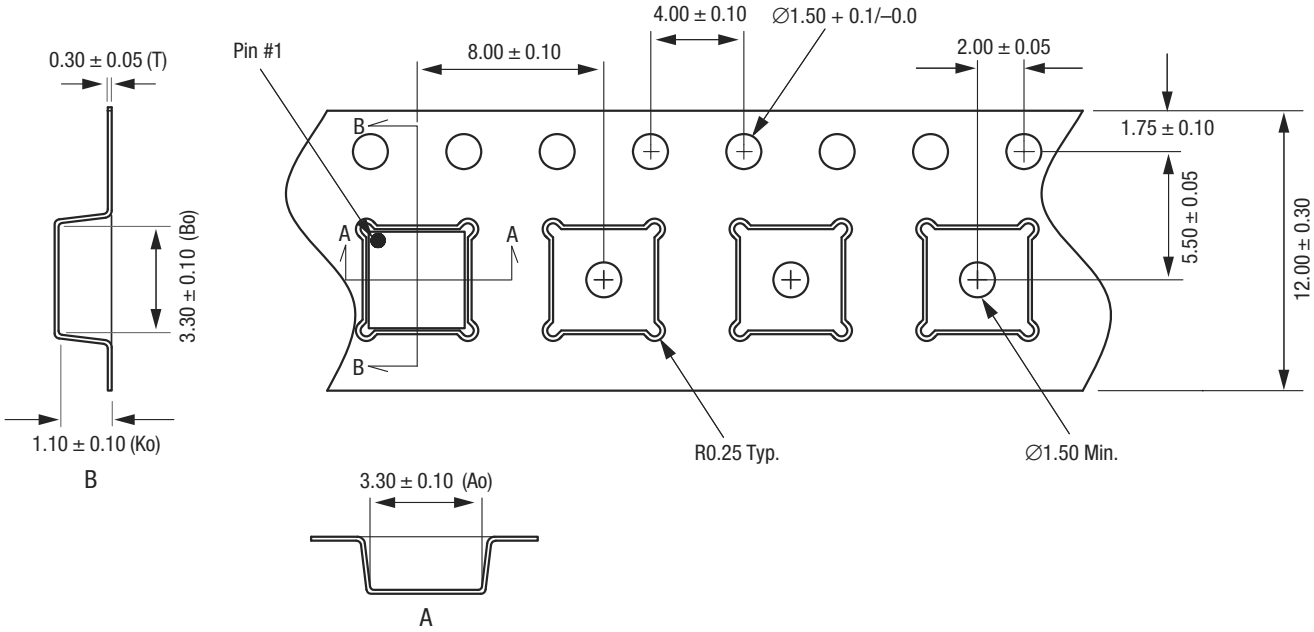


*Notes:*
1. *Carrier tape: black conductive polystyrene, non-bakeable material.*
2. *Cover tape material: transparent conductive HSA.*
3. *Cover tape size: 9.20 mm width.*
4. *All measurements are in millimeters.*

S1698

**Figure 18. SKY14151-350LF Tape and Reel Dimensions**



EX-1031
Kangxi Communication Technologies (Shanghai) Co., Ltd. v. Skyworks Solutions, Inc.

## Ordering Information

| Model Name | Manufacturing Part Number | Evaluation Board Part Number |
|---|---|---|
| SKY14151-350LF SP4T Switch | SKY14151-350LF | SKY14151-350LF-EVB |

Copyright © 2008, 2009, 2010 Skyworks Solutions, Inc. All Rights Reserved.

Information in this document is provided in connection with Skyworks Solutions, Inc. (“Skyworks”) products or services. These materials, including the information contained herein, are provided by Skyworks as a service to its customers and may be used for informational purposes only by the customer. Skyworks assumes no responsibility for errors or omissions in these materials or the information contained herein. Skyworks may change its documentation, products, services, specifications or product descriptions at any time, without notice. Skyworks makes no commitment to update the materials or information and shall have no responsibility whatsoever for conflicts, incompatibilities, or other difficulties arising from any future changes.

No license, whether express, implied, by estoppel or otherwise, is granted to any intellectual property rights by this document. Skyworks assumes no liability for any materials, products or information provided hereunder, including the sale, distribution, reproduction or use of Skyworks products, information or materials, except as may be provided in Skyworks Terms and Conditions of Sale.

THE MATERIALS, PRODUCTS AND INFORMATION ARE PROVIDED “AS IS” WITHOUT WARRANTY OF ANY KIND, WHETHER EXPRESS, IMPLIED, STATUTORY, OR OTHERWISE, INCLUDING FITNESS FOR A PARTICULAR PURPOSE OR USE, MERCHANTABILITY, PERFORMANCE, QUALITY OR NON-INFRINGEMENT OF ANY INTELLECTUAL PROPERTY RIGHT; ALL SUCH WARRANTIES ARE HEREBY EXPRESSLY DISCLAIMED. SKYWORKS DOES NOT WARRANT THE ACCURACY OR COMPLETENESS OF THE INFORMATION, TEXT, GRAPHICS OR OTHER ITEMS CONTAINED WITHIN THESE MATERIALS. SKYWORKS SHALL NOT BE LIABLE FOR ANY DAMAGES, INCLUDING BUT NOT LIMITED TO ANY SPECIAL, INDIRECT, INCIDENTAL, STATUTORY, OR CONSEQUENTIAL DAMAGES, INCLUDING WITHOUT LIMITATION, LOST REVENUES OR LOST PROFITS THAT MAY RESULT FROM THE USE OF THE MATERIALS OR INFORMATION, WHETHER OR NOT THE RECIPIENT OF MATERIALS HAS BEEN ADVISED OF THE POSSIBILITY OF SUCH DAMAGE.

Skyworks products are not intended for use in medical, lifesaving or life-sustaining applications, or other equipment in which the failure of the Skyworks products could lead to personal injury, death, physical or environmental damage. Skyworks customers using or selling Skyworks products for use in such applications do so at their own risk and agree to fully indemnify Skyworks for any damages resulting from such improper use or sale.

Customers are responsible for their products and applications using Skyworks products, which may deviate from published specifications as a result of design defects, errors, or operation of products outside of published parameters or design specifications. Customers should include design and operating safeguards to minimize these and other risks. Skyworks assumes no liability for applications assistance, customer product design, or damage to any equipment resulting from the use of Skyworks products outside of stated published specifications or parameters.

Skyworks, the Skyworks symbol, and “Breakthrough Simplicity” are trademarks or registered trademarks of Skyworks Solutions, Inc., in the United States and other countries. Third-party brands and names are for identification purposes only, and are the property of their respective owners. Additional information, including relevant terms and conditions, posted at www.skyworksinc.com, are incorporated by reference.



EX-1031
Kangxi Communication Technologies (Shanghai) Co., Ltd. v. Skyworks Solutions, Inc.