SKYWORKS®

WHITE PAPER

Choosing the Right RF Switches for Smart Mobile Device Applications

Abstract: Modern smart phones and tablet computers typically incorporate multiple wireless services at different frequency bands ranging from FM radio to LTE. At the same time, an increasing number of designs utilize more than one antenna to enhance sensitivity and suppress cross-talk. Both trends place the miniature RF solid-state switches in an increasingly crucial role in smart mobile device RF front end designs. This paper will give an overview of both high and low throw-count RF switches used in different circuit locations in a typical mobile device design, and discuss how each performance specification and design feature will impact on the overall performance of your system. In addition, this paper will dive deeper inside each RF switch module and reveal current and future trends in core RF switching technologies.

Introduction

Global enthusiasm for data-centric smart mobile devices exploded when several leading cell-phone makers pioneered in integrating multiple wireless communication technologies into one small box that is "always connected" to the Internet. Since then, users of smart phones, tablet computers, and e-readers all crave faster data-rates and more functionality, which has pushed the entire industry on both ends: on one end, better wireless standards/technologies, such as evolved high-speed packet access (HSPA+) and long term evolution (LTE), are being developed and adapted by big service carriers; and on the other end, more wireless services, such as GPS, mobile TV, and RFID, are being integrated into each smart mobile device. Both trends translate into the same impact on RF front end design of these devices: more frequency bands and better signal quality (Figure 1). In the near future, a smart mobile device can easily operate in 12 or more cellular bands, plus WiFi, WiMAX, GPS, Bluetooth®, mobile FM/TV, RFID, and other non-cellular services. With such large amounts of parallel chains to be integrated, RF front end engineers face great challenges in coping with exploded RF component counts and power consumption, while maintaining signal quality over a wide frequency range across bands.

EX-1039
Kangxi Communication Technologies (Shanghai) Co., Ltd. v. Skyworks Solutions, Inc.

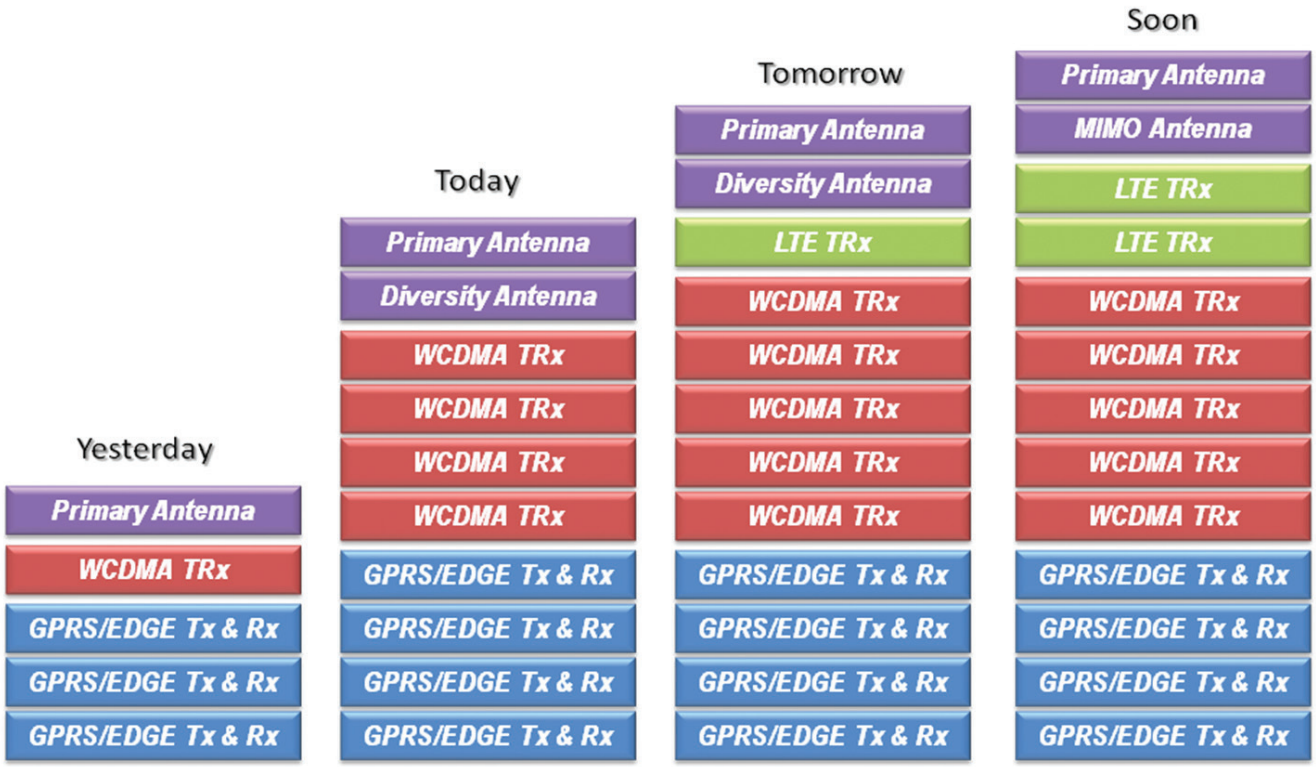

Figure 1. RF Front End (Cellular) Evolution

Switches are the key enabling technology found in all multiband front ends. Traditionally, one high-throw RF switch was placed at the cellular antenna to connect multiple RF chains of duplexers and single-band amplifiers. However, as more bands are cramped into a single front end, distribution switches enable the use of multi-mode and multiband power amplifiers to reduce design complexity, and save on cost and power consumption (Figure 2). Adding diversity antennae and a diversity antenna switch for additional data receiving purposes allows better received data quality, as well as the ability to download data simultaneously while the primary antenna is occupied for voice communication.

EX-1039
Kangxi Communication Technologies (Shanghai) Co., Ltd. v. Skyworks Solutions, Inc.

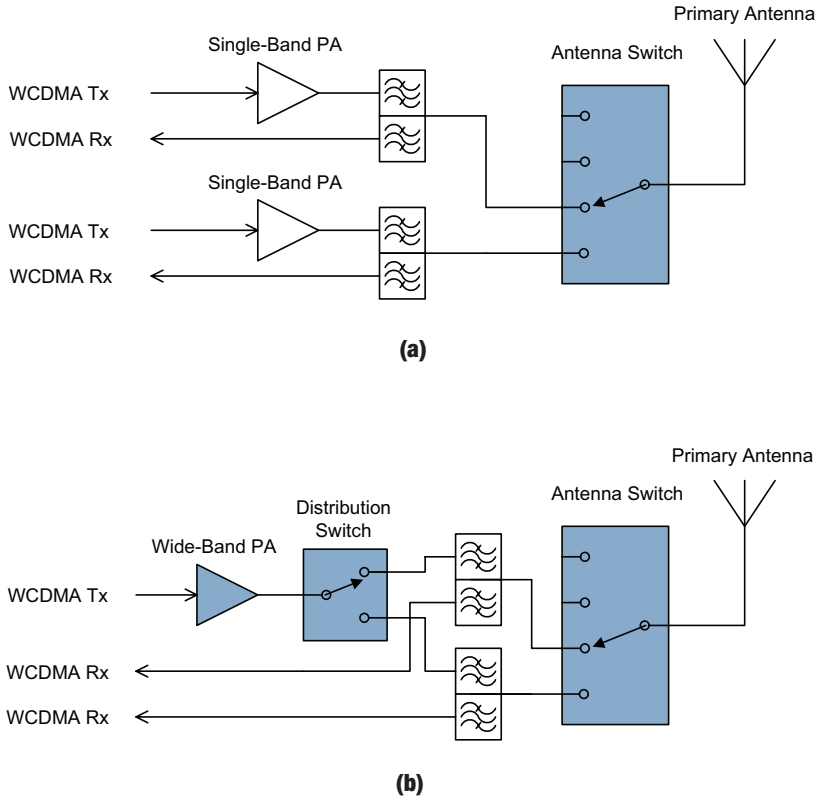

Figure 2. Example of WCDMA Front End Using Single-Band PA (a) and Wide-Band PA with Distribution Switch (b)

On the non-cellular side, modules like WiFi and Bluetooth® also rely on RF switches to switch between transmitting and receiving signals, but power requirements of these switches are lower than their cellular counterparts.

In the following sections, we will have detailed discussion on crucial switch specifications for each function, and what to look at when choosing switches for a typical smart mobile device RF front-end design. Afterward, we will visit some notable technology trends in the RF switch industry. In the Appendix section, for technologically inquisitive readers, there is a micro tutorial on solid-state RF switch technologies, as well as a description of how a practical switch works and where the trade-offs among switch specifications are. Brief definitions of important specifications related to RF switches are listed in Table 2 in the Appendix section.

EX-1039
Kangxi Communication Technologies (Shanghai) Co., Ltd. v. Skyworks Solutions, Inc.

Switches for Smart Mobile Devices

Figure 3 shows a hypothetical smart mobile device RF front end architecture, with six GSM ports (2 Tx, 4 Rx), four CDMA/WCDMA Tx/Rx bands, four diversity bands, WiFi, Bluetooth® and GPS support. All the switches are highlighted, and labeled according to their applications.

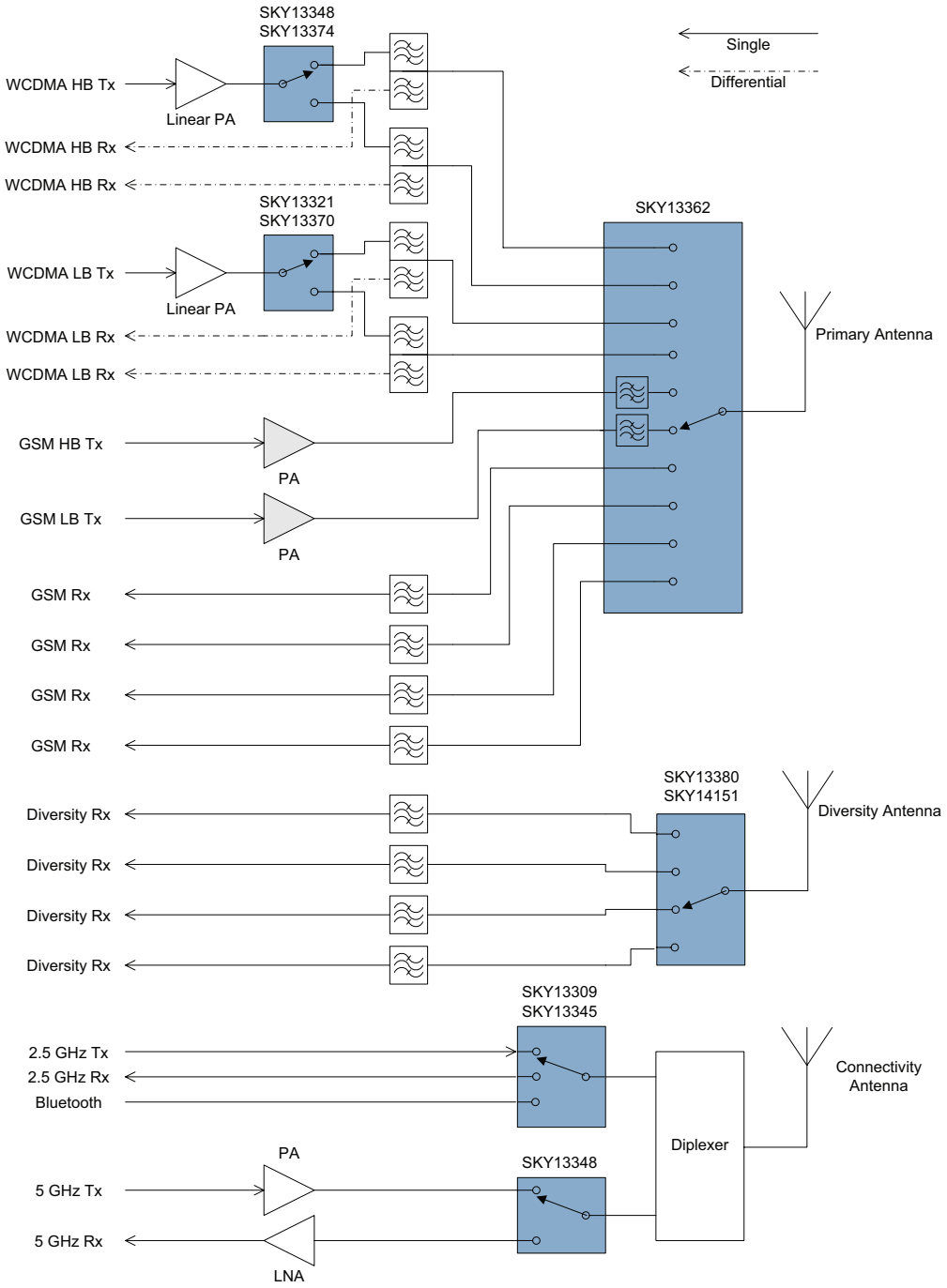

Figure 3. Smart Mobile Device Front End

EX-1039
Kangxi Communication Technologies (Shanghai) Co., Ltd. v. Skyworks Solutions, Inc.

The Single-Pole-10-Throw (SP10T) primary antenna switch is the largest in size and complexity, as well as power handling capability. The primary antenna switch should be able to handle +36 dBm GSM Tx power, plus circuit losses and antenna mismatch, which results in an input-referred 1 dB compression point ($IP_{1\ dB}$) of close to +40 dBm (10 W).

Apart from high power handling capability, low insertion loss is another important specification when considering the primary antenna switch. Lower loss at the receive port puts less burden on the subsequent low noise amplifiers (LNA), and therefore improves receiver sensitivity. More than 25 dB isolation between GSM Tx and the Rx port is important as well, preventing the high power Tx signal leaking into the Rx path and potentially damaging the receiver.

The switch also requires excellent harmonic suppression (less than -30 dBm) at GSM Tx bands to eliminate interference, such as preventing one device's GSM low-band (LB) signal (850/900 MHz) from the interfering with a GSM high-band (HB) signal (1800/1900 MHz). Harmonic suppression at the GSM Tx side is typically realized by integrating two low pass filters (LPF), one at each of the GSM Tx ports (LB and HB). Given the fact that the antenna can be poorly matched due to the external environment, the switch should be able to maintain excellent harmonic performance under mismatched conditions with voltage standing wave ratio (VSWR) at the antenna port as high as 5:1 (Figure 4).

Besides harmonics performance at the GSM side, very good linearity is also required at the CDMA/WCDMA bands, and is measured in the form of intermodulation distortion (IMD) through the out-of-band blocking test. [3] Consider this example (Figure 5): a series of WCDMA signals are being transceived, with Tx at 1.95 GHz and Rx at 2.14 GHz. As a person nearby starts to make a call, its GSM Tx signal at 1.76 GHz will be picked up by our antenna. If the antenna switch's linearity is poor, both the picked-up GSM HB Tx signal and the local WCDMA HB Tx signal tend to mix inside the switch and produce a 3rd order intermodulation peak right at the WCDMA Rx band at 2.14 GHz. In order to prevent any interference at the WCDMA receiver side, such intermodulation peak has to be below the system's sensitivity floor. Switches with IMD to be less than -100 dBm over phase are desired for such an application.

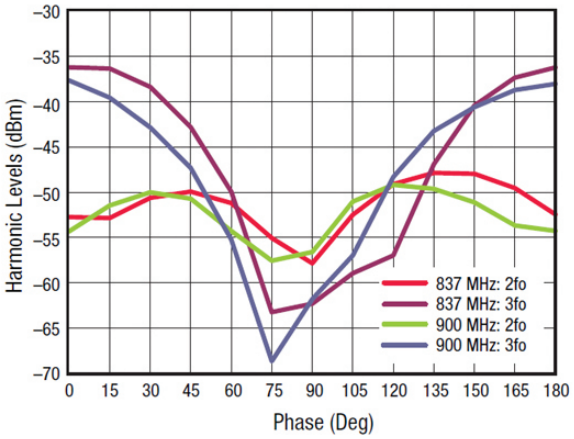

(a) GSM Tx Low Band

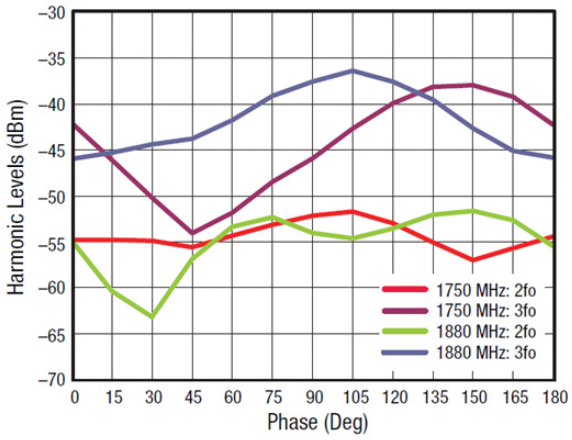

(b) GSM Tx High Band

Figure 4. Primary Antenna Switch (SKY13362) Harmonics vs. Phase at 5:1 Mismatch

EX-1039
Kangxi Communication Technologies (Shanghai) Co., Ltd. v. Skyworks Solutions, Inc.

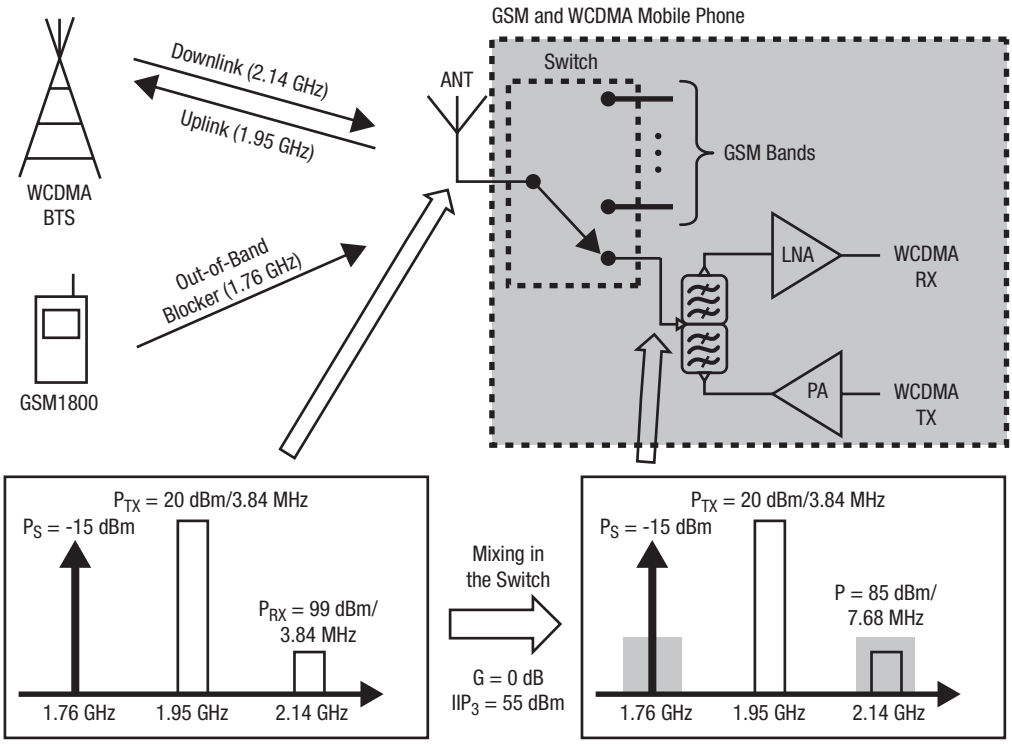

(a) IMD Mechanism Explained [3]

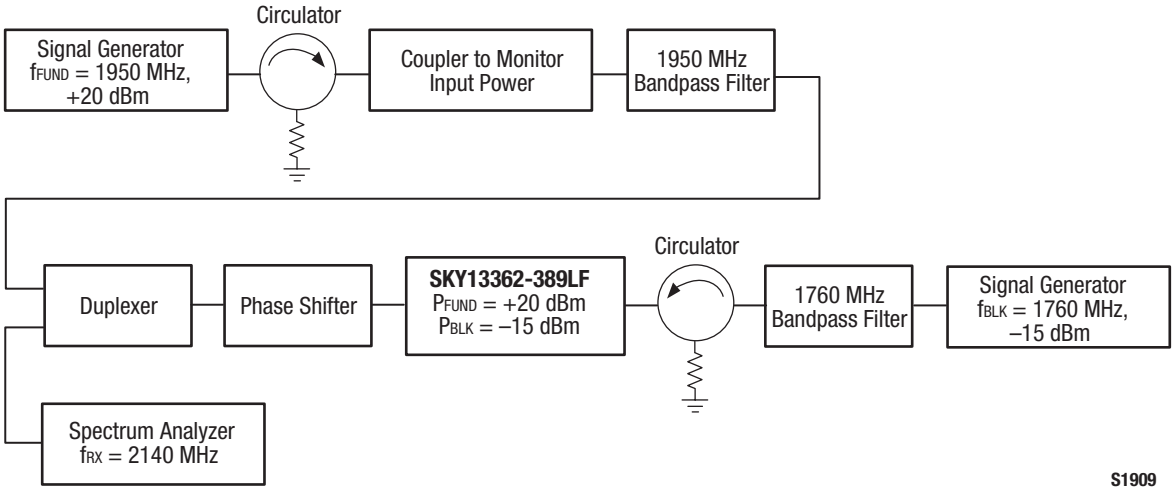

(b) IMD Test Setup

Figure 5. Inter-Modulation Distortion (IMD) in WCDMA Band

EX-1039
Kangxi Communication Technologies (Shanghai) Co., Ltd. v. Skyworks Solutions, Inc.

On the DC side, since the switch is constantly active either during a phone call, downloading a Web page, or simply standing by and listening for incoming calls, it constantly drains current from the battery. Low current drawn by the switch controller leads to less battery drain and therefore longer battery life. In general, supply current should not exceed 1 mA, and is typically less than 0.5 mA.

CDMA/WCDMA distribution switches and diversity switches are low- and mid-throw-count switches with mid-range power capability to cater the CDMA/WCDMA signal peak power, which is lower than GSM's. Distribution switches are used to route signals both pre-PA and post-PA, as bands are added or combined in multiband platforms. Diversity switches are used to connect the diversity antenna, which is quite common in data card applications and are growing in popularity for smart mobile device use. Diversity receive techniques are used to increase data rates, so diversity switches typically have lower power capacity since they are used on the receiver side. Apart from power capability, very good IMD performance is also desired for the CDMA/WCDMA application.

The low-throw-count switches used at the WiFi/Bluetooth® side are low power switches, with $P_{1\ dB}$ around +30 dBm. Small size (1 x 1 mm) and low control voltage (1.8 V) are more frequently seen among these type of switches. Since the embedded WiFi/Bluetooth® transceiver module is highly standardized, a standard error vector magnitude (EVM) vs. input power test is the typical performance indicator for WiFi/Bluetooth® switches (Figure 6), which takes into account both power and linearity performance of the tested switch. For WiMAX operation, RF switches must have higher power capability and better linearity than the WiFi version to avoid signal distortion.

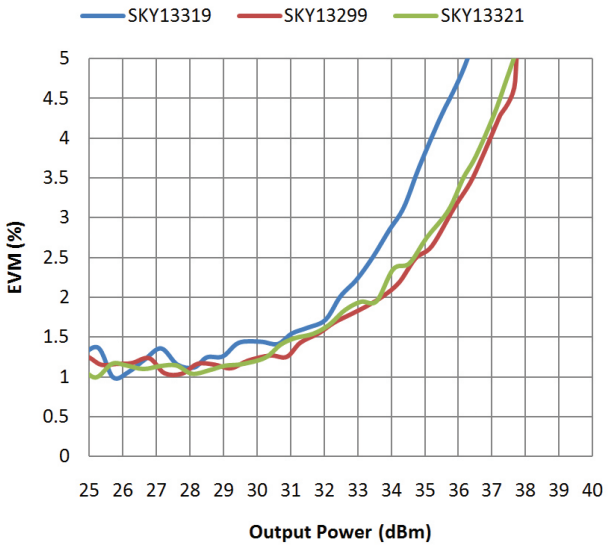

Figure 6. Error Vector Modulation (EVM) Results for High Power WLAN Switches at 2.45 GHz

Switch Technology Trends

As baseband CMOS chips continue to scale up while total DC power consumption continues to scale down, control voltage from the baseband controller shows the trend of reducing from +2.8 V to +1.8 V, and in certain areas, there are signs that it might be further reduced to +1.3 V. Because these voltages approach the GaAs pHEMT's threshold voltage, an integrated CMOS charge pump becomes necessary to satisfy the ever-increasing switch linearity and power requirements, which brings us to compare the relative advantages of GaAs pHEMT technology and SOI MOSFET technology (Table 1).

Table 1. GaAs pHEMT vs. SOI MOSFET

Parameters	GaAs pHEMT	SOI MOSFET
Fabrication Process	GaAs process	Standard Silicon CMOS process
Channel Conductivity	High	Mid
Individual FET Power Density	Mid	Low
Typical Bias Voltage	Positive (E-Mode) or Negative (D-Mode)	Positive and Negative (require integrated driver section)
Die Area	Smaller	Larger
Logic Integration Support	Little (E/D-Mode only)	Standard
Manufacturing Cost Per Wafer Area	Mid	Low

At the low-throw-count switch side, GaAs pHEMT technology offers good power and linearity performance while occupying less chip area, which means smaller package size. SOI MOSFET switches generally occupy larger chip area, due to the requirement of an integrated positive and negative voltage generator, as well as lower power handling and higher loss for each FET. But the ability to function at voltage below +1.8 V, and the flexibility of the ability to integrate CMOS logic circuits on chip have given SOI MOSFET switches an upper hand in low control voltage and high throw-count switch applications

EX-1039
Kangxi Communication Technologies (Shanghai) Co., Ltd. v. Skyworks Solutions, Inc.

Apart from control voltage, control signal protocol is evolving as well (Figure 7). Traditionally switches are controlled through a loosely defined parallel scheme called general purpose input/output (GPIO), which involves a set of parallel control pins with pre-defined "high" and "low" logic. More and more designs are moving from this parallel to a serial control scheme, such as the serial peripheral interface (SPI). A SPI protocol may involve a clock pin, a serial control input pin and a latch-enable pin that triggers switch action according to the stored serial control bits. In 2003, several major mobile chipset companies formed the Mobile Industry Processor Interface (MIPI) Alliance, aiming to standardize communication between all the major components in mobile devices with structured serial commands. [4] Today there is an increasing number of companies adopting MIPI and requiring RF switches used in their mobile devices to be MIPI-compatible.

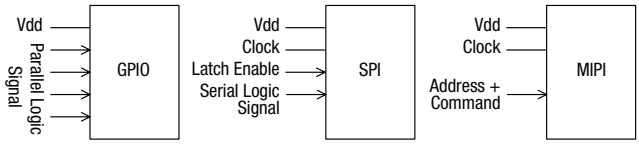

Figure 7. Switch Control Interface Evolution

On the other hand, linearity requirements for RF switches are getting harder to meet due to fundamental physics limitations of the FETs, and as a result, many filter technologies are increasingly incorporated into the switch packages. Integrated passive device (IPD) filters built on native GaAs or SiO_2 wafers offer good harmonic suppression and high power handling capability, and are often used at GSM Tx ports. Surface acoustic wave (SAW) filters [5] offer near-perfect band selection, and are being used at the GSM Rx side. Similar to SAW filters, bulk acoustic wave (BAW) filters [6] that offer similar filtering behavior while being more robust are gaining popularity recently as well.

In addition, the 4G Long Term Evolution (LTE) standards specify the presence of a second antenna element for multiple-input-multiple-output (MIMO) operation, which may use a double-pole-double-throw (DPDT) dual antenna switch to allow the baseband processor to dynamically select the stronger receive signal or even simultaneously communicate two independent data streams with the base station (Figure 8).

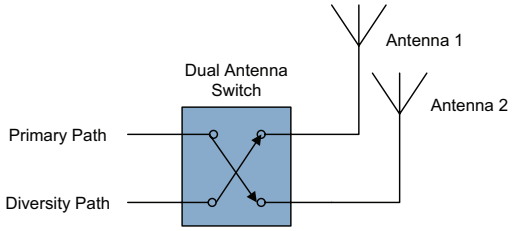

Figure 8. Dual Antenna Multiple-Input-Multiple-Output (MIMO)

Finally, active antenna tuning based on solid-state switching technology is also being perused by many manufacturers (Figure 9). This technology will allow much improved impedance matching for a single antenna across a wide frequency range, and therefore reduce power stress on the transmitter side and increase sensitivity on the receiver side. However, the requirements for high power capability and ultra low loss (high Q factor) impose great challenges to the development of these types of devices.

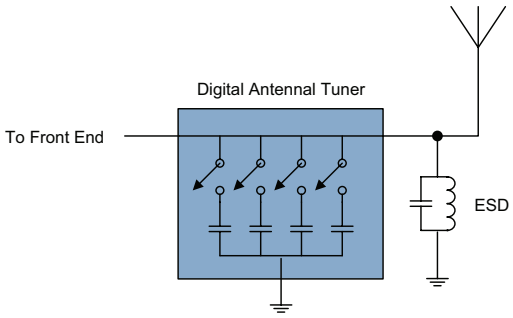

Figure 9. Digital Antenna Tuner Example Using Shunt Switched Capacitor Bank

EX-1039
Kangxi Communication Technologies (Shanghai) Co., Ltd. v. Skyworks Solutions, Inc.

Summary

As the mobile device industry moves toward faster data-rates, more wireless services, and lower power consumption, solid-state RF switches become crucial in the RF front-end design. GaAs pHEMT and SOI MOSFET technologies offer a variety of RF switches with excellent power and linearity performance, which are ideal for versatile architectures of current and next-generation smart mobile devices.

Appendix: A Brief Tutorial on Solid-State RF Switching

There are three existing technologies suitable for making practical RF switches with the size of less than a few mm^2: p-i-n diode, micro-electro-mechanical systems (MEMS), and solid-state field-effect transistor (FET). P-i-n diodes are usually seen in high power applications, but their need for large biasing current and relatively slow switching speed make them unsuitable for mobile device applications. Though touted by its promising potential for years, only a few types of MEMS devices have been commercialized, including miniature gyroscopes and accelerometers. The MEMS RF switch is attractive for its ultra-low insertion loss and high isolation, but its large actuation voltage requirement, special packaging, and reliability issues are major obstacles that researchers have yet to solve after years of effort. Solid-state FETs comprise a large family of many different structure variations on many different material systems, but all of them share the important traits of being fast, reliable, highly integratable and low power consumption, which make this technology ideal to make miniature RF switches.

Since its birth decades ago, FET technology has evolved into many varieties across almost all known semiconductor material systems. [2] The two most popular types of FETs used in the RF switch industry are gallium arsenide (GaAs) psuedomorphic high electron mobility transistor (pHEMT), and silicon-on-insulator (SOI) metal oxide field effect transistor (MOSFET). GaAs pHEMT and SOI MOSFET, as well as other FETs, share the same basic structure: two electrodes ("drain" and "source") contacting a planar "channel", and a metal "gate" placed above the channel. When bias voltage induces change in the gate's electrical potential, free charges in the channel are either pushed out or pulled in, causing change in resistance between the drain and source electrodes. In extremes cases, the FET can be biased to be either fully off (infinite/maximum resistance) or fully on (minimum resistance), which turns it into a simple switch (Figure 10).

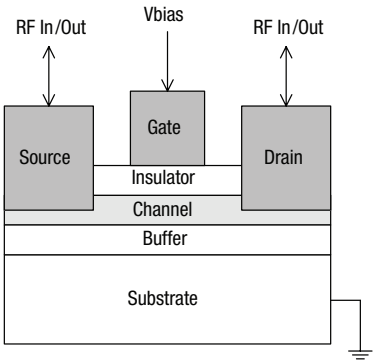

(a) Common FET Structure

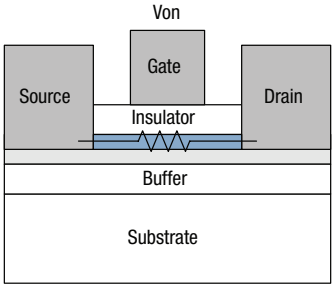

(b) ON-State (Equivalent to Resistor)

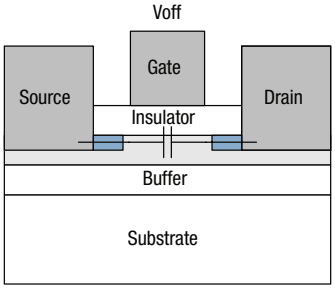

(c) OFF-State (Equivalent to Capacitor)

Figure 10. GaAs pHEMT and SOI MOSFET Structures

For the RF switch that consists of only one series FET, when the switch is on, the FET approximates as a series resistor, and any loss which occurs in it when the RF signal passes through is called "insertion loss", which is defined as the ratio between output and input RF power. Therefore, the switch's on-state is also called its "insertion loss state". On the other hand, when the switch is off, due to parasitic capacitances between the FET's gate, drain and source, it approximates as a series capacitor. At high frequencies, some of the RF signal can still be coupled from input to output through this capacitance. The ratio between output and input RF power when the switch is off is called "isolation", and the switch's off-state is known as its "isolation state" (Table 2).

EX-1039
Kangxi Communication Technologies (Shanghai) Co., Ltd. v. Skyworks Solutions, Inc.

Increasing the series FET's size decreases resistance and thus improves insertion loss, but also degrades isolation proportionally. Cascading multiple series FETs improves isolation, but degrades insertion loss proportionally. In many cases, series-FET-only switch designs may not be able to satisfy both insertion loss and isolation requirements, especially at high frequencies, so shunt FETs are added. These FETs are turned on when the switch is in isolation state. As shown in Figure 11, adding a shunt FET significantly improves isolation at the high frequency range, with the cost of a little higher insertion loss. Figure 12 also shows a real SPDT switch design, with series and shunt FETs identified.

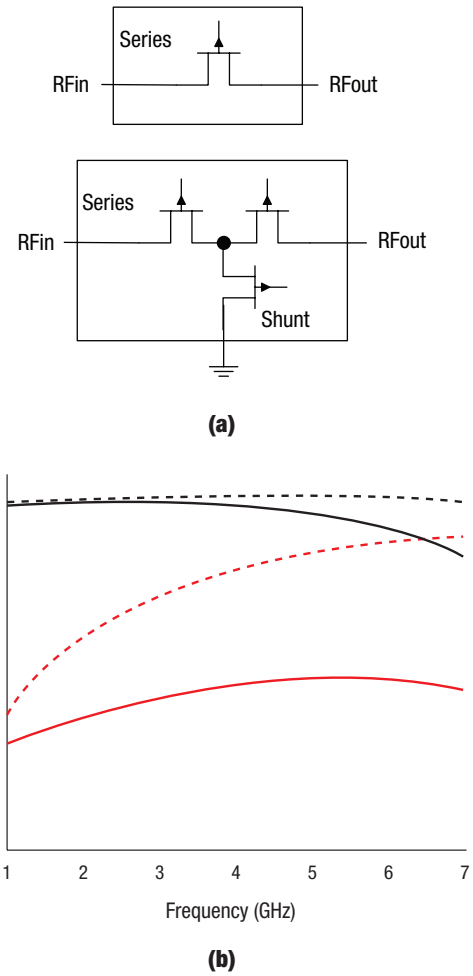

Figure 11. Performance Comparison between Series-Only (dashed) and Series-Shunt (solid) Switch Architectures

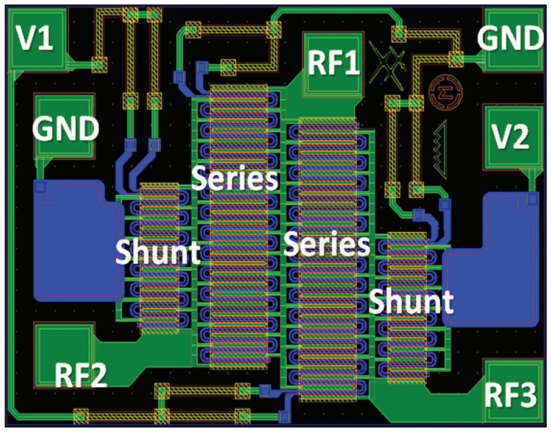

Figure 12. A Typical SPDT Switch with Series and Shunt FETs

On the other hand, the series resistor approximation for single FET in on-state is not completely accurate under large-signal conditions when the RF signal's peak-to-peak amplitude is comparable to the bias voltage applied to gate. Non-linearity of the FETs may cause generation of second and third harmonics under large-signal conditions, while too much RF power will cause the switch to saturate with fast degrading insertion loss and isolation. Though there is one effective way of defining a RF switch's power handling capability by measuring its 1 dB power compression point ($P_{1\ dB}$), there are various methods for measuring the switch's linearity, depending on the application and preferred point of view. These methods include measurement of 2nd and 3rd harmonics (H2, H3), 2nd and 3rd order input intercept points (IIP2, IIP3), 2nd and 3rd intermodulation distortion (IMD2, IMD3), and error vector magnitude (EVM) (Table 2).

EX-1039
Kangxi Communication Technologies (Shanghai) Co., Ltd. v. Skyworks Solutions, Inc.

Table 2. Important RF Switch Specification Parameters

Specifications	Symbols	Definitions	Illustrations	Typical Units
Insertion Loss	IL	Loss of signal power resulting from the insertion of a switch (ON-state) in a transmission line.	$IL = 10\log_{10}\frac{P_{out,on}}{P_{in}}$	dB
Isolation	ISO	Same as insertion loss, but in OFF state.	$ISO = 10\log_{10}\frac{P_{out,off}}{P_{in}}$	dB
1 dB Power Impression Point	$P_{1\ dB}$	Input power level when insertion loss increases by 1 dB.	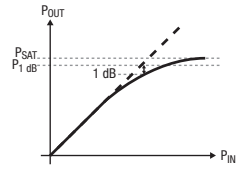	dBm
2nd and 3rd Harmonic	H2, H3	Level of signal power at 2 and 3 times of the fundamental signal frequency generated due to nonlinearity of the switch	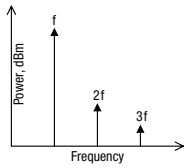	dBm, dBc
2nd and 3rd Order Input Power Interception Point	IIP2, IIP3	Two close tones can be mixed due to switch's nonlinearity, and generate second and third intermodulation components that are close to the fundamental signals and their second harmonics. IIP2 and IIP3 determine the extrapolated intercept points in terms of input power, at which the power of the extrapolated second and third intermodulation components equal the power of the fundamental signals.	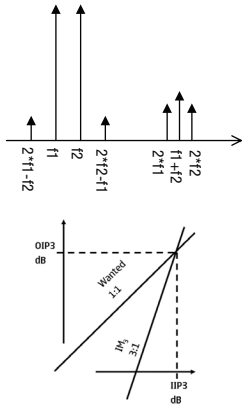	dBm
2nd and 3rd Order Intermodulation Distortion	IMD2, IMD3	Similar to IIP2 and IIP3, but possibly with non-symmetrical tones.	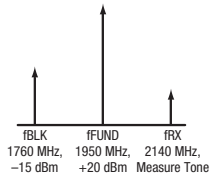	dBm
Error Vector Magnitude	EVM	It measures demodulated performance including switch and other components. The measured symbol locations are compared with reference symbol locations, and the error vector distance are used to calculate EVM.	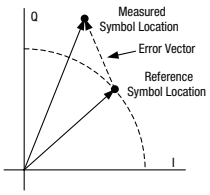	%, dB

EX-1039
Kangxi Communication Technologies (Shanghai) Co., Ltd. v. Skyworks Solutions, Inc.

References

[1] Skyworks, RF switch products catalogue, www.skyworksinc.com/products_switches.aspx

[2] Field-Effect Transistor on Wikipedia, http://en.wikipedia.org/wiki/Field-effect_transistor

[3] T. Ranta, J. Ella and H. Pohjonen, “Antenna switch linearity requirements for GSM/WCDMA mobile phone front-ends”, IEEE Euro. Conf. on Wireless Tech., 2005

[4] MIPI Alliance Web site, http://www.mipi.org

[5] C. Campbell, “Surface acoustic wave devices for mobile and wireless communications”, Academic Press, 1998

[6] R. Aigner, et. al., “Bulk-acoustic-wave filters: performance optimization and volume manufacturing”, IEEE MTT-S International, 2003

EX-1039
Kangxi Communication Technologies (Shanghai) Co., Ltd. v. Skyworks Solutions, Inc.

Copyright © 2011, Skyworks Solutions, Inc. All Rights Reserved.

Information in this document is provided in connection with Skyworks Solutions, Inc. ("Skyworks") products or services. These materials, including the information contained herein, are provided by Skyworks as a service to its customers and may be used for informational purposes only by the customer. Skyworks assumes no responsibility for errors or omissions in these materials or the information contained herein. Skyworks may change its documentation, products, services, specifications or product descriptions at any time, without notice. Skyworks makes no commitment to update the materials or information and shall have no responsibility whatsoever for conflicts, incompatibilities, or other difficulties arising from any future changes.

No license, whether express, implied, by estoppel or otherwise, is granted to any intellectual property rights by this document. Skyworks assumes no liability for any materials, products or information provided hereunder, including the sale, distribution, reproduction or use of Skyworks products, information or materials, except as may be provided in Skyworks Terms and Conditions of Sale.

THE MATERIALS, PRODUCTS AND INFORMATION ARE PROVIDED "AS IS" WITHOUT WARRANTY OF ANY KIND, WHETHER EXPRESS, IMPLIED, STATUTORY, OR OTHERWISE, INCLUDING FITNESS FOR A PARTICULAR PURPOSE OR USE, MERCHANTABILITY, PERFORMANCE, QUALITY OR NON-INFRINGEMENT OF ANY INTELLECTUAL PROPERTY RIGHT; ALL SUCH WARRANTIES ARE HEREBY EXPRESSLY DISCLAIMED. SKYWORKS DOES NOT WARRANT THE ACCURACY OR COMPLETENESS OF THE INFORMATION, TEXT, GRAPHICS OR OTHER ITEMS CONTAINED WITHIN THESE MATERIALS. SKYWORKS SHALL NOT BE LIABLE FOR ANY DAMAGES, INCLUDING BUT NOT LIMITED TO ANY SPECIAL, INDIRECT, INCIDENTAL, STATUTORY, OR CONSEQUENTIAL DAMAGES, INCLUDING WITHOUT LIMITATION, LOST REVENUES OR LOST PROFITS THAT MAY RESULT FROM THE USE OF THE MATERIALS OR INFORMATION, WHETHER OR NOT THE RECIPIENT OF MATERIALS HAS BEEN ADVISED OF THE POSSIBILITY OF SUCH DAMAGE.

Skyworks products are not intended for use in medical, lifesaving or life-sustaining applications, or other equipment in which the failure of the Skyworks products could lead to personal injury, death, physical or environmental damage. Skyworks customers using or selling Skyworks products for use in such applications do so at their own risk and agree to fully indemnify Skyworks for any damages resulting from such improper use or sale.

Customers are responsible for their products and applications using Skyworks products, which may deviate from published specifications as a result of design defects, errors, or operation of products outside of published parameters or design specifications. Customers should include design and operating safeguards to minimize these and other risks. Skyworks assumes no liability for applications assistance, customer product design, or damage to any equipment resulting from the use of Skyworks products outside of stated published specifications or parameters.

Skyworks, the Skyworks symbol, and "Breakthrough Simplicity" are trademarks or registered trademarks of Skyworks Solutions, Inc., in the United States and other countries. Third-party brands and names are for identification purposes only, and are the property of their respective owners. Additional information, including relevant terms and conditions, posted at www.skyworksinc.com, are incorporated by reference.

EX-1039
Kangxi Communication Technologies (Shanghai) Co., Ltd. v. Skyworks Solutions, Inc.