US 20110036346A1

(19) United States

(12) Patent Application Publication

Cohen et al.

(10) Pub. No.: US 2011/0036346 A1

(43) Pub. Date: Feb. 17, 2011

(54) **PERSONAL INHALATION DEVICES**

(75) Inventors: **Scott A. Cohen**, Portland, ME (US); **Michael J. Bedecs**, Jupiter, FL (US)

Correspondence Address:
PATRICK R. SCANLON
PRETI FLAHERTY BELIVEAU & PACHIOS LLP
ONE CITY CENTER
PORTLAND, ME 04112-9546 (US)

(73) Assignee: **A. J. MARKETING LLC**, Portland, ME (US)

(21) Appl. No.: **12/869,000**

(22) Filed: **Aug. 26, 2010**

Related U.S. Application Data

(63) Continuation-in-part of application No. 29/335,784, filed on Apr. 21, 2009, Continuation-in-part of application No. 29/335,785, filed on Apr. 21, 2009.

Publication Classification

(51) **Int. Cl.**
A61M 11/00 (2006.01)

(52) **U.S. Cl.** **128/200.14**

(57) **ABSTRACT**

A personal inhalation device includes an outer shell having an orifice formed therein and containing a medium having one or more deliverables and an atomizing unit disposed within the shell. The atomizing unit atomizes the medium when a user puffs on the orifice such that vapor containing the deliverables is discharged through the orifice. The personal inhalation device is further capable of metering the deliverables discharged with the vapor.

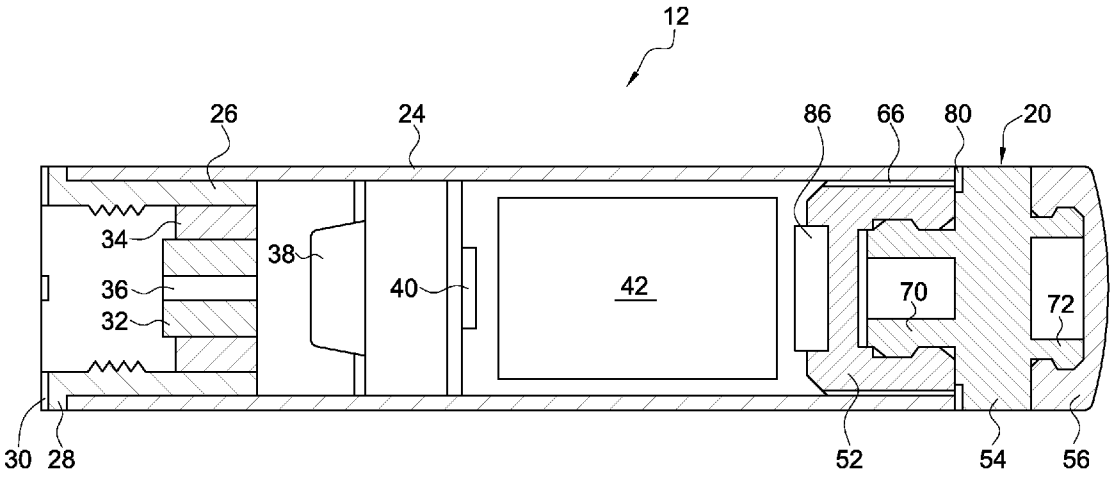

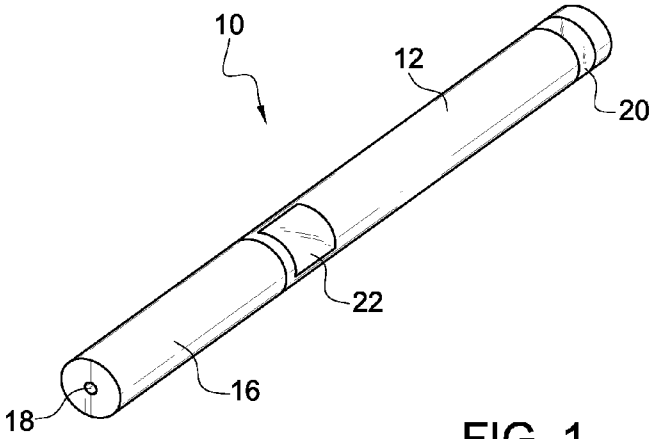

FIG. 1

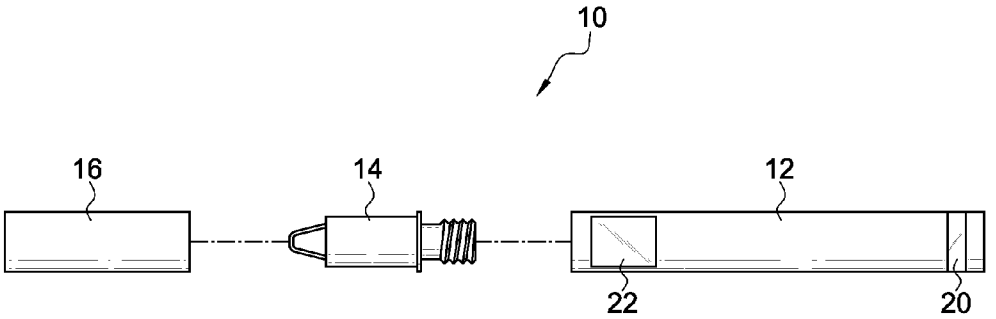

FIG. 2

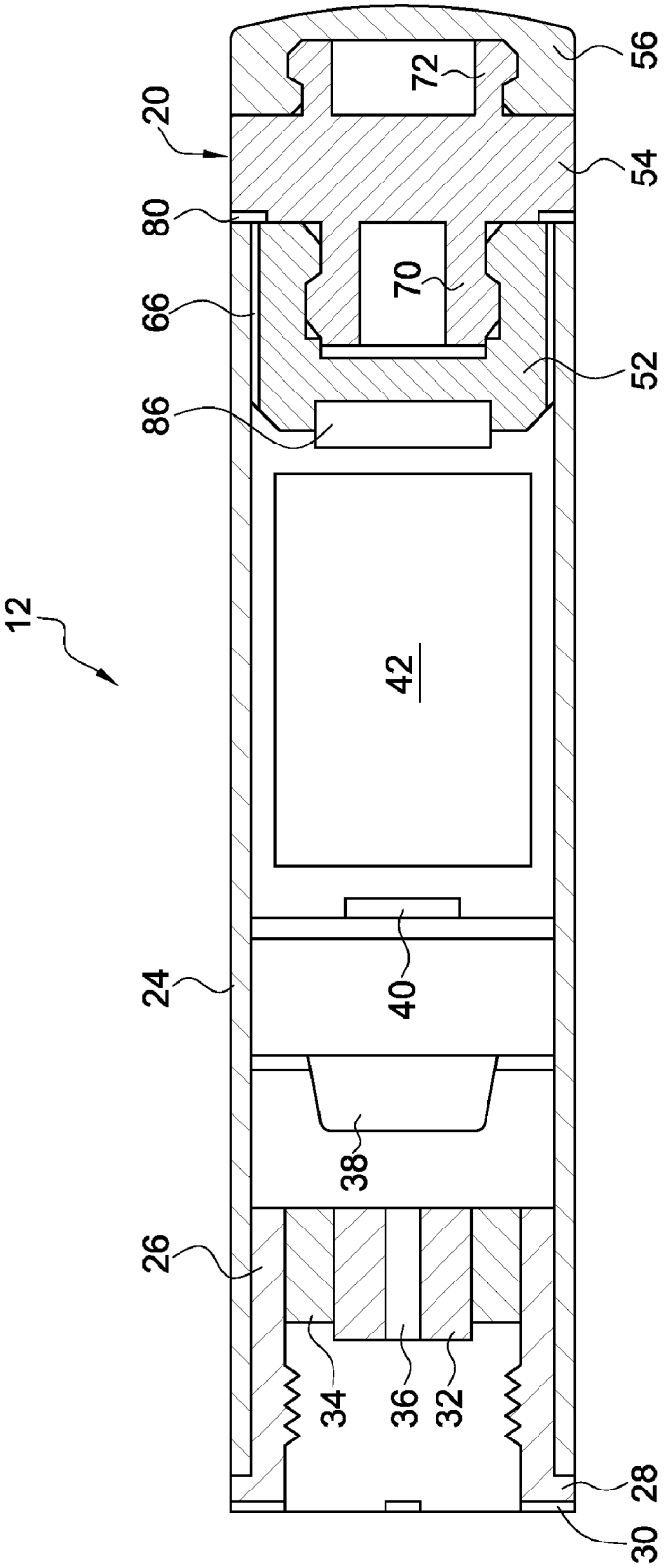

FIG. 3

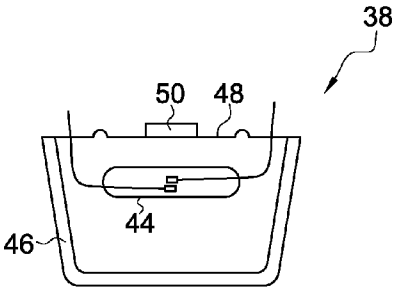

FIG. 4

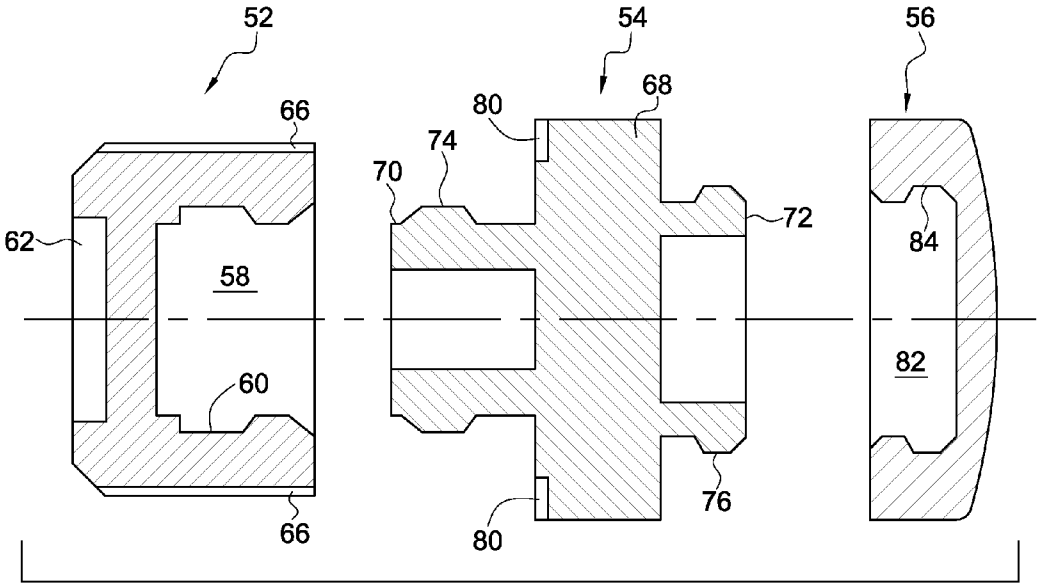

FIG. 5

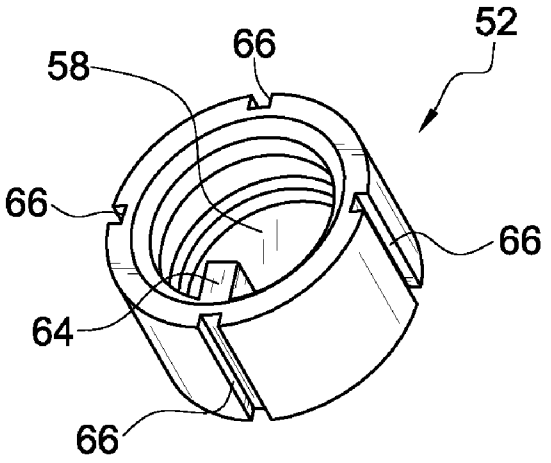

FIG. 6

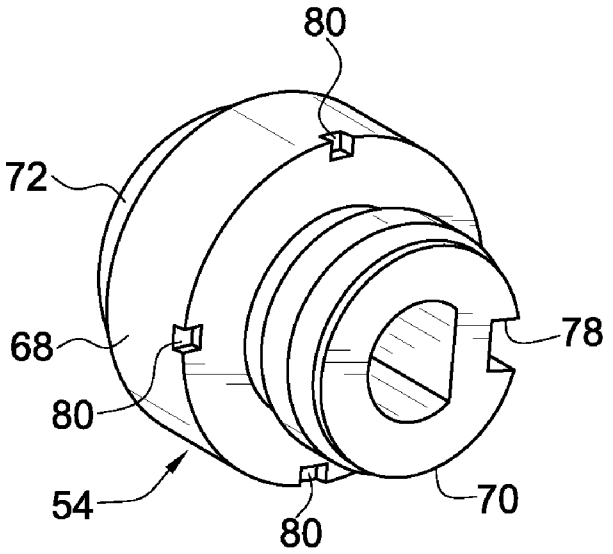

FIG. 7

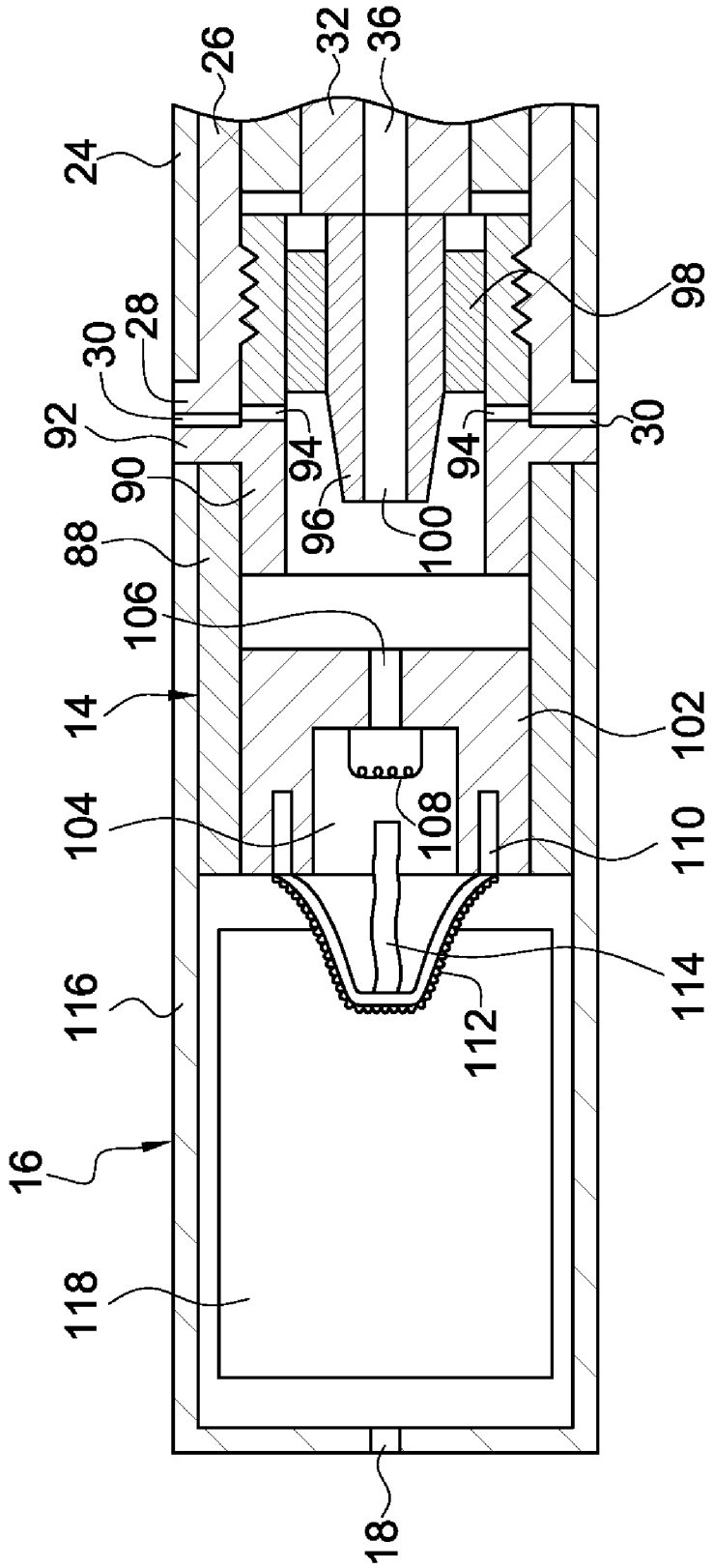
26
32
36
24
98
28
30
92
94
94
30
90
96
100
88
106
14
102
104
108
110
116
114
112
16
118
18

FIG. 8

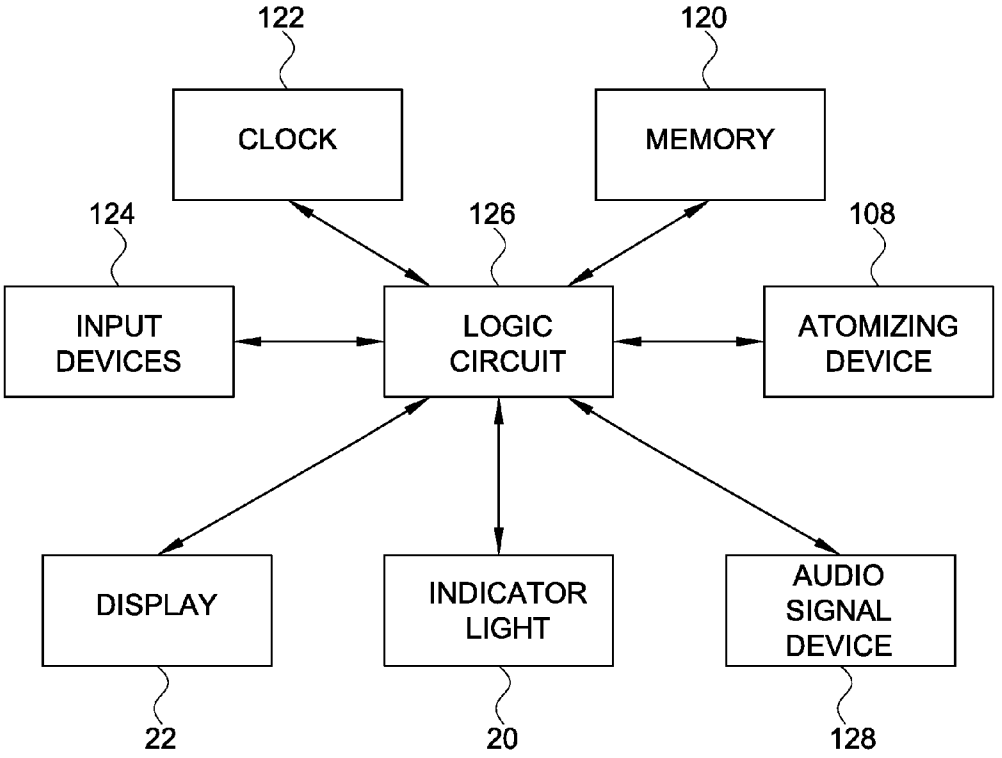
122
120
CLOCK
MEMORY
124
126
108
INPUT DEVICES
LOGIC CIRCUIT
ATOMIZING DEVICE
DISPLAY
INDICATOR LIGHT
AUDIO SIGNAL DEVICE
22
20
128

FIG. 9

PERSONAL INHALATION DEVICES

CROSS REFERENCES TO RELATED APPLICATIONS

[0001] This application is a Continuation-In-Part of copending U.S. Patent Application No. 29/335,784, filed Apr. 21, 2009, copending U.S. Patent Application No. 29/335,785, filed Apr. 21, 2009, and copending U.S. Patent Application No. 29/335,786, filed Apr. 22, 2009, all of which are hereby incorporated by reference.

BACKGROUND OF THE INVENTION

[0002] This invention relates generally to inhalation devices and more particularly to personal inhalation devices having regulated operation.

[0003] The term "personal inhalation device" refers to a device that delivers doses of one or more substances, chemicals, medicines, ingredients or the like (hereinafter referred to as "deliverables") by way of inhaled vapor. Generally, a personal inhalation device holds a medium (such as a solution) that contains the deliverable and is atomized when a user draws or puffs on the device, thereby creating a vapor containing the deliverable. The vapor and the deliverable are inhaled by the user. For the sake of clarity, as used herein, the term "inhale" refers to a person drawing in a substance (typically via the mouth but could also be via the nose, a tracheostomy, or the like) and can include, but does not necessarily require, the substance entering the lungs. As used herein, the term "vapor" refers to both a substance in the gaseous state and a suspension of finely divided solid particles or liquid droplets in a gas, including aerosols, mists and the like.

[0004] While a wide variety of deliverables are possible, personal inhalation devices are often used to deliver nicotine by inhalation, and when so used are sometimes referred to as an "electronic cigarette" or "e-cigarette." Such devices provide several advantages as an alternative to smoked tobacco products. Inhaling a vapor containing nicotine is believed to preclude the tar and other harmful effects of traditional tobacco smoke. Also, the vapor, which dissipates quickly, reduces the hazards of secondhand smoke or passive smoking among bystanders. And because there is no actual combustion involved, personal inhalation devices avoid the fire hazard and environmental problems associated with tobacco smoking. Personal inhalation devices also have an advantage with respect to other alternative nicotine delivery systems (e.g., nicotine chewing gum, nicotine patches, etc.) in that inhaling the vapor can produce a flavor and physical sensation similar to that of inhaled tobacco smoke.

[0005] Despite these advantages, some regulatory agencies have questioned using personal inhalation devices to deliver nicotine, particularly raising concerns about the uncontrolled and inconsistent amounts of nicotine delivered by such devices. Some jurisdictions around the world have placed limits on—or even banned—the use of electronic cigarettes. In the United States, the sale and use of personal inhalation devices might require approval of the Food and Drug Administration.

[0006] Accordingly, it is desirable to provide a personal inhalation device that is more likely to gain regulatory approval.

SUMMARY OF THE INVENTION

[0007] A personal inhalation device including an outer shell having an orifice formed therein and containing a medium having one or more deliverables and an atomizing unit disposed within the shell. The atomizing unit atomizes the medium when a user puffs on the orifice such that vapor containing the deliverables is discharged through the orifice. The personal inhalation device is further capable of metering the deliverables discharged with the vapor.

DESCRIPTION OF THE DRAWINGS

[0008] FIG. **1** perspective view of one embodiment of a regulated personal inhalation device.

[0009] FIG. **2** is an exploded view of the regulated personal inhalation device of FIG. **1**.

[0010] FIG. **3** is a cross-sectional view of a portion of the regulated personal inhalation device of FIG. **1**.

[0011] FIG. **4** is a cross-sectional view of one embodiment of a pressure transducer used in the regulated personal inhalation device of FIG. **1**.

[0012] FIG. **5** is an exploded, cross-sectional view of a light assembly used in the regulated personal inhalation device of FIG. **1**.

[0013] FIG. **6** is a perspective view of a base member from the light assembly.

[0014] FIG. **7** is a perspective view of a lens member from the light assembly.

[0015] FIG. **8** is a cross-sectional view of another portion of the regulated personal inhalation device of FIG. **1**.

[0016] FIG. **9** is a schematic view depicting one embodiment of control electronics for the regulated personal inhalation device of FIG. **1**.

DETAILED DESCRIPTION OF THE INVENTION

[0017] Referring to the drawings wherein identical reference numerals denote the same elements throughout the various views, FIGS. **1** and **2** show one embodiment of a regulated personal inhalation device **10**. In this embodiment, the personal inhalation device **10** is constructed to resemble a cigarette in appearance, but it should be noted that the present invention can be constructed to resemble various other items, including but not limited to a cigar or a pipe. In addition, the present invention can be provided with a construction that does not resemble any particular item.

[0018] The personal inhalation device **10** includes three principal components: an electronics section **12**, an atomizing unit **14** and a cartridge **16**. In the illustrated embodiment, the electronics section **12** is connected to one end of the atomizing unit **14** by means of a screw-on connection, and the cartridge **16** is connected to the other end of the atomizing unit **14** by an interference fit (sometimes referred to as a friction fit). When so assembled, the personal inhalation device **10** defines an elongated, cylindrical shape having a length-to-diameter ratio that is similar to the length-to-diameter ratio of a standard cigarette. As described in more detail below, the cartridge **16** stores a deliverable-containing medium which is atomized in the atomizing unit **14** when a user draws or puffs on the cartridge end of the inhalation device **10**. As used herein, "drawing" or "puffing" on the inhalation device **10** involves a user placing the cartridge end of the inhalation device **10** into the mouth and sucking in, thereby drawing air through the inhalation device **10**. This creates a vapor that is inhaled by the user through an orifice **18** formed in the end of the cartridge **16**. An indicator light **20** at the other end of the electronics section **12** will illuminate when the user inhales vapor from the inhalation device **10**,

and a display **22** is mounted on the exterior surface of the electronics section **12** for outputting additional information to the user. The operation of the inhalation device **10** is controlled by micro-electronic components (hereinafter referred to as the "control electronics") contained in the electronics section **12**.

[0019] Instead of a separable interference fit, the atomizing unit **14** and the cartridge **16** could be joined together in a fixed manner, such as by gluing or the like. In this instance, the combined atomizing unit-cartridge component would by disposable, and replaced after a certain number of uses or when the medium in the cartridge is deplete.

[0020] Referring to FIG. **3**, the electronics section **12** includes a first cylindrical housing **24** that is open at both ends. A first coupling **26**, having internal screw threads, is mounted in a first end of the first housing **24**. The first coupling **26** comprises a cylindrical body that fits snuggly inside the first housing **24** (thereby creating an interference fit between these components) and has a flange **28** on a first end thereof that abuts the end of the first housing **24**. A number of slots **30** are formed in the flange **28** to create air passages into the interior of the first coupling **26**. The internal threads are formed on the inner surface of the cylindrical body, near the first end. A first electrical contact **32** is mounted inside the cylindrical body of the first coupling **26**, adjacent to the second end thereof, by means of a first insulating sleeve **34**. The first electrical contact **32** is made of an electrically conductive material and comprises a substantially cylindrical member having a central bore **36** formed therethrough along its longitudinal axis. The cylindrical body of the first coupling **26** is also made of an electrically conductive material. The first insulating sleeve **34** is made of a non-electrically conductive material.

[0021] The first cylindrical housing **24** further contains a pressure transducer **38**, an electronic circuit board **40**, and a power source **42**. Each of these components is mounted within the first housing **24** so as to allow air to freely flow around or past the component. Also, the pressure transducer **38** and the electronic circuit board **40**, as well as the first coupling **26** and the first electrical contact **32**, are electrically connected to the power source **42** in any suitable manner, such as wiring (not shown). The pressure transducer **38** is designed to react to a pressure increase due to air flowing through the first housing **24** to actuate the control electronics on the electronic circuit board **40** and other electric components of the inhalation device **10**. In one possible embodiment, shown in FIG. **4**, the pressure transducer **38** can comprise a reed switch **44** disposed in a casing **46**, which is covered by a flexible member **48**. A magnet **50** is mounted on the flexible member **48**. These elements are arranged such that a flow of air through the first housing **24** will deflect the flexible member **48** and thereby move the magnet **50** closer to the reed switch **44**. The magnet's magnetic field then closes the reed switch **44**, which completes a circuit between the power source **42** and the electronic circuit board **40**. When the flow of air ceases, the flexible member **48** and the magnet **50** return to their normal positions, and the reed switch **44** re-opens. The power source **42** can be a battery or any other suitable energy storage device, such as a capacitance-based device. The electronic circuit board **40** contains control electronics for controlling operation of the inhalation device **10**.

[0022] Referring again to FIG. **3**, as well as FIGS. **5-7**, the indicator light **20** is an assembly comprising a base member **52**, a lens member **54**, and a tip member **56**. The base member **52** is a substantially cylindrical piece of a translucent material that is mounted in the first housing **24** with one end being positioned substantially flush with the second end of the first housing **24**. The outside diameter of the base member **52** closely matches the inside diameter of the first housing **24** so that the base member **52** is held inside the first housing **24** by an interference fit. A circular cavity or socket **58** is formed in this end of the base member **52**, and an annular groove **60** is formed in the inner surface of the socket **58**. A relatively shallow recess **62** is provided in the opposite end of the base member **52**. As best seen in FIG. **6**, an axially extending rib **64** is formed on the inner surface of the socket **58**. Several axially extending channels **66** are provided in the outer cylindrical surface of the base member **52**. These channels **66** extend the length of the base member **52** and function as air passages.

[0023] The lens member **54** is a unitary piece made of a translucent material, which can be colored. The lens member **54** comprises a cylindrical body portion **68** having an outside diameter that is substantially equal to the outside diameter of the first housing **24**. A first connector **70** extends from one end of the body portion **68** and a second connector **72** extends from the other end of the body portion **68**. The first connector **70** is an annular projection having a first retaining lip **74** formed on its outer cylindrical surface. Similarly, the second connector **72** is an annular projection having a second retaining lip **76** formed on its outer cylindrical surface. As best seen in FIG. **7**, an axially extending slot **78** is provided in the outer surface of the first connector **70**. A number of small notches **80** are formed in the first end of the body portion **68**, at the outer cylindrical surface. When assembled, the first connector **70** is inserted into the socket **58**, with the first retaining lip **74** being received in the groove **60** to axially retain the first connector **70** in the socket **58**. Furthermore, the rib **64** is received in the slot **78**, thereby preventing relative rotational movement between the lens member **54** and the base member **52**. Also, each notch **80** aligns with a corresponding one of the channels **66** to define a passage for external air to flow into the interior of the first housing **24**.

[0024] The tip member **56** is a disc-shaped member made of an opaque material and having an outside diameter that is substantially equal to the outside diameter of the cylindrical body portion **68** of the lens member **54**. One end of the tip member **56** defines a closed, curved surface, and the other end has a circular cavity **82** with an annular groove **84** formed in the inner surface thereof. When assembled, the second connector **72** is inserted into the cavity **82**, with the second retaining lip **76** being received in the groove **84** to axially retain the tip member **56** on the second connector **72**.

[0025] The indicator light **20** further includes a light source **86** that is mounted in the shallow recess **62** of the base member **52**. The light source **86**, which can be any suitable type of light source, such as a light emitting diode or the like, is electrically connected to the power source **42** and the circuit board **40** and is activated at the desired times by the control electronics. When the light source **86** is activated, the translucent base member **52** functions as a light pipe and transmits the light to the lens member **54**. The light is then transmitted through the translucent lens member **54**, causing the outer cylindrical surface of the body portion **68** (which is visible to the user while inhaling on the inhalation device **10**) to be illuminated.

[0026] Referring to FIG. **8**, the atomizing unit **14** includes a second cylindrical housing **88** that is open at both ends. A second coupling **90**, having external screw threads, is

mounted in a first end of the second housing **88**. The second coupling **90** includes a cylindrical body having an annular flange **92** formed on its outer surface, spaced a short distance from a first end thereof. The first end of the second coupling **90** is inserted into the second housing **88** so that the annular flange **92** abuts the first end of the second housing **88**. The outside diameter of the coupling body closely matches the inside diameter of the second housing **88** so that the second coupling **90** is held in the second housing **88** by an interference fit. Radial holes **94** extend through the cylindrical body of the second coupling **90** and create air passages into the interior of the second coupling **90**. The external threads are formed on the outer surface of the cylindrical body, near the second end thereof, and mesh with the internal threads of the first coupling **26** so as to join the atomizing unit **14** to the electronics section **12** via a screw-on connection. A second electrical contact **96** is mounted inside the cylindrical body of the second coupling **90** by means of a second insulating sleeve **98**. The second electrical contact **96** is made of an electrically conductive material and comprises a substantially cylindrical member having a central bore **100** formed therethrough along its longitudinal axis. The cylindrical body of the second coupling **90** is also made of an electrically conductive material. The second insulating sleeve **98** is made of a non-electrically conductive material, such as plastic.

[0027] A holder **102** is disposed in the second housing **88**, with one end thereof flush with the second end of the second housing **88**. The holder **102** comprises a cylindrical body, made of a non-electrically conductive material, retained in the second housing **88** by an interference fit. A cavity formed in a first end of the holder **102** defines an atomization chamber **104**. An air passage **106** extends through the holder **102**, along its longitudinal axis, from the atomization chamber **104** to the second end of the holder **102**. An atomizing device **108** is mounted in the atomization chamber **104** and is electrically connected to the second coupling **90** and the second electrical contact **96** in any suitable manner, such as wiring (not shown). In the illustrated embodiment, the atomizing device **108** is a heating coil positioned adjacent to the air passage **106**. Alternatively, the atomizing device **108** could be another type of device, such as an ultrasonic atomizer. A yoke-shaped strut **110** is mounted on the first end of the holder **102**, straddling the atomization chamber **104**. The portion of the strut **110** extending away from the holder **102** supports a metal mesh **112**. A wick **114** supported by the strut **110** extends into the atomization chamber **104**.

[0028] The cartridge **16** includes a third cylindrical housing **116** that is open at a first end and closed at a second end, with the orifice **18** being formed in the closed second end. The open first end of the cartridge **16** fits tightly over the second housing **88** and is held thereon by an interference fit. A reservoir **118** is mounted in the cartridge **16** in such a manner so as to allow air to flow around the reservoir **118** to the orifice **18**. The reservoir **118** contains the medium that is atomized in the atomization chamber **104** when a user draws or puffs on the inhalation device **10**.

[0029] The medium can be in the form of a solution comprising any desired solute dissolved in a suitable solvent such as water, propylene glycol, or the like. The solute can be one or more substances that provide the deliverable or deliverables to be delivered with the vapor inhaled by the user. The medium can comprise other forms such as gels and powders. In the illustrated embodiment, the medium is a liquid solution, and the reservoir **118** can comprise an adsorbent pad that holds the solution. Possible deliverables include nicotine, caffeine, medications, and vitamins. Using nicotine as an deliverable allows for the delivery of nicotine without the tar and other harmful effects of traditional smoking of tobacco. Another possible deliverable is tetrahydrocannabinol (THC), the primary psychoactive substance in marijuana, for use in jurisdictions in which medical marijuana is permitted. The deliverables could also comprise flavorings, such as menthol, fruit flavors, etc., that have no particular chemical effects other than taste.

[0030] The electronics section **12** and the atomizing unit **14** are joined with a screw-on connection, as described above. When these components are so joined, the first and third cylindrical housings **24**, **116** define an outer shell of the inhalation device **10**. Furthermore, the flange **28** of the first coupling **26** abuts the annular flange **92** of the second coupling **90**, and the first and second electrical contacts **32**, **96** contact one another. Being electrically conductive, these elements create an electric circuit that conducts power from the power source **42** to the atomizing device **108**, which is controlled by the electronics. When the cartridge **16** is mounted on the atomizing unit **14**, the strut **110** and metal mesh **112** engage the reservoir **118**, allowing media (e.g., solution) to be wicked through the mesh **112** and onto the wick **114**. The outer shell of the illustrated embodiment is cylindrical such that the personal inhalation device **10** resembles a cigarette in appearance. However, the personal inhalation device **10** is not limited to a cylindrical outer shell; the personal inhalation device **10** can take on different shapes and configurations, as noted above.

[0031] In operation, a user inhales vapor from the inhalation device **10** by puffing on the orifice **18** in the cartridge end. This causes external air to be drawn into the inhalation device **10**. Specifically, air is drawn in through the slots **30** and then passes through the holes **94** into the interior of the second coupling **90**. Air is also drawn in through the notches **80** and passes through the axial channels **66** into the interior of the first housing **24**. The air flowing through the first housing **24** triggers the pressure transducer **38**, thereby activating the control electronics, which power the light source **86** and the atomizing device **108**. The air in the first housing **24** flows through the bores **36**, **100** of the first and second electrical contacts **32**, **96**, respectively, and joins the air that has entered via the slots **30** and the holes **94**. The combined air flow then passes through the air passage **106** into the atomization chamber **104**. The air is heated as it flows over the atomizing heating coil **108**. The heated air then passes over the wick **114** causing the medium that has been absorbed into the wick **114** to be atomized, creating a vapor containing the deliverables from the medium. The vapor flows around the reservoir **118**, and is discharged through the orifice **18** into the user's mouth. Each instance of the user drawing or puffing on the inhalation device **10** is referred to herein as a "puff."

[0032] As mentioned above, the electronic circuit board **40** contains control electronics for controlling operation of the regulated personal inhalation device **10**. Referring to FIG. **9**, one possible embodiment of the control electronics comprises a memory **120** and a clock **122** connected to a logic circuit **126**. The logic circuit **126** is also connected to one or more input devices **124**, as well as the atomizing device **108**, the indicator light **20**, and the display **22**. An audio signal device **128**, such as a buzzer, can also be connected to the logic circuit **126**. The indicator light **20**, the display **22**, and

the audio signal device **128** are controlled by the logic circuit **126** to provide feedback to the user.

[0033] The control electronics are programmable such that a user is able to selectively determine the operation of the inhalation device **10**. The one or more input devices **124** provide a user interface for programming the control electronics, allowing the user to select an operating mode, turn metering (described below) on and off, vary metering, and otherwise set or change operating parameters of the inhalation device **10**. Programming instructions can be either embedded in the logic circuit **126** or stored in the memory **120**, with the desired programming being called up for use by the logic circuit **126** via manipulation of one or more of the input devices **124**. Programming instructions also can be uploaded from an external device via one or more of the input devices **124**, or accessed directly from an input device.

[0034] Some possible means and techniques for programming the control electronics include, but are not limited to, the following examples. One example uses an input device in the form of a pin inserted into a receptacle formed in the inhalation device **10**. Typically, a series of pins is provided, with each pin having a means (such as a resistive circuit or mechanical features similar to the teeth on a key) defining unique programming instructions. The receptacle makes a circuit connection with the logic circuit **126** such that the programming instructions are provided to the logic circuit **126**. The pin defining the desired programming instructions is inserted into the receptacle in order to produce the desired programming of the control electronics.

[0035] In another example, the inhalation device **10** has an input device in the form of a button or switch electrically connected to the logic circuit **126**. The button or switch is mounted on the inhalation device **10** in a manner accessible to the user so that the user can press the button or switch. Programming instructions are entered by pressing the button or switch in a predetermined sequence. Different sequences are provided for the various programming instructions; the user inputs the appropriate sequence to produce the desired programming. Other possibilities involve using the pressure transducer **38** as an input device. For instance, the user could trigger the pressure transducer **38** by sequentially inhaling and/or exhaling through the orifice **18** in various patterns or combinations. The desired programming is achieved through the appropriate sequence of inhalations and/or exhalations. Alternatively, the pressure transducer **38** could be triggered by sequentially tapping the inhalation device **10** against a surface (or tapping on the inhalation device **10**), whereby each tap would cause the reed switch **44** to close. In this case, the desired programming is achieved through a particular sequence of taps. It is also possible to use an input device in the form of an accelerometer disposed inside in the inhalation device **10**, whereby shaking or tapping the inhalation device **10** activates the accelerometer, which sends a signal to the logic circuit **126**. The desired programming is achieved through a particular sequence of shakes or taps.

[0036] Another example involves providing the inhalation device **10** with an input device in the form of a programming port that is configured to receive a cable, wire or the like for connecting the inhalation device **10** to an external device, such as a computer. The programming port is electrically connected to the logic circuit **126** so that programming instructions can be provided to the logic circuit **126** via the external device. The programming port could also be used to download data from the inhalation device **10** and recharge the power source **42**. A further example uses an input device in the form of a radio frequency (RF) or other type of wireless receiver disposed inside of the inhalation device **10** and electrically connected to the logic circuit **126**. The user would then use an external device with compatible wireless capability to wirelessly transmit programming instructions to the inhalation device **10**. It is also possible to use magnetic induction to provide programming instructions. This would involve a first element, such as a coil, disposed inside of the inhalation device **10** and electrically connected to the logic circuit **126**, and a second element, such as a magnet, located externally of the inhalation device **10**. Waving the magnet over the coil would produce a temporary electric current in the coil, sending a signal to the logic circuit **126**. The desired programming is achieved by waving the magnet over the coil in a particular sequence.

[0037] Another example uses the indicator light **20** as an input device. This is accomplished by using a bi-directional light-emitting diode (LED) as the light source **86**. Bi-directional LEDs, such as the LED-based sensors proposed by Mitsubishi Electric Research Laboratories (see, for example, the web site at http://www.merl.com/projects/LED_chemical_sensors/), function as a light emitter when driven in forward bias and as a light detector when driven in reverse bias. When functioning as a light detector, the bi-directional LED will produce a signal in response to a flash of light impinging thereon, which signal is transmitted to the logic circuit **126**. The desired programming can be achieved by providing a particular sequence of flashes. A bi-directional LED is also capable of functioning as the light source **86**.

[0038] In another example, programming of the control electronics can be accomplished through the cartridge **16**. In this instance, multiple interchangeable cartridges **16** are provided, and each cartridge has an input device, such as a memory chip or logic circuit containing particular programming instructions, mounted therein. Different cartridges **16** would provide different programming instructions. The cartridge input device makes an electrical connection with the logic circuit **126** when its cartridge **16** is connected to the atomizing unit **14** of an assembled inhalation device **10**. The programming of the inhalation device **10** can thus be changed by installing a different cartridge **16**. That is, the desired programming is achieved by installing the cartridge **16** having the appropriate programming instructions. This type of component programming could also be accomplished by providing a number of interchangeable atomizing units **14** having input devices with different programming instructions, instead of using interchangeable cartridges **16**.

[0039] In one operating mode, the control electronics meter (i.e., supply in a measured or regulated amount) the deliverables discharged with the vapor through the orifice **18**. The amount of deliverables contained in a puff is also referred to herein as the dose or dosage. The metering can include controlling the maximum amount of deliverables (i.e., the maximum dosage) discharged with a single puff, controlling the maximum number of doses discharged during a set period of time, or both.

[0040] In one embodiment, the logic circuit **126** controls the on-time of the atomizing device **108** to meter the maximum dosage delivered by a single puff. As described above, the control electronics activate the atomizing device **108** when the pressure transducer **38** is triggered by a user drawing on the inhalation device **10**. While activated, the atomizing device **108** atomizes media on the wick **114**, creating a

vapor containing the deliverable from the medium. The logic circuit **126** deactivates the atomizing device **108** after a predetermined period of time, even if the user draws on the inhalation device **10** for a longer time. The atomizing device **108** ceases to atomize media upon being deactivated. Therefore, the amount of media atomized during a single puff, and thus the maximum dosage in the puff, is limited by the predetermined on-time of the atomizing device **108**. The duration of the on-time of the atomizing device **108** dictates the maximum possible dosage in a puff regardless of how long air is drawn through the inhalation device **10** during the puff. A dosage smaller than the maximum dosage is possible by drawing on the inhalation device **10** for a time shorter than the predetermined on-time, but the maximum dosage cannot be exceeded.

[0041] Where the atomizing device **108** is a heating coil, it is possible to meter the maximum dosage delivered by a single puff based on temperature rather than time. In this case, a sensor for sensing the temperature in the atomization chamber **104** is electrically connected to the logic circuit **126**. When the atomizing device **108** is activated as the user draws on the inhalation device **10**, media is heated and atomized, creating a vapor containing the deliverables from the medium. If the temperature in the atomization chamber **104** exceeds a predetermined value, the logic circuit **126** deactivates the atomizing device **108** even if the user continues to draw on the inhalation device **10**, thereby limiting the maximum dosage of the puff.

[0042] There are also multiple approaches for the logic circuit **126** to meter the maximum number of doses discharged during a set period of time. For instance, the logic circuit **126** can control a minimum time interval between activations of the atomizing device **108**. That is, after the logic circuit **126** activates the atomizing device **108** in response to the user puffing on the inhalation device **10**, the logic circuit **126** will not activate the atomizing device **108** again until a predetermined period of time (the minimum time interval) has elapsed. If the user puffs again on the inhalation device **10**, and thereby triggers the pressure transducer **38**, before the minimum time interval has elapsed, the logic circuit **126** will not activate atomizing device **108**. The minimum time interval can be set by the user via one or more of the input devices **124**.

[0043] Another possible approach is to control the number of atomizing device activations permitted during a set period of time. For example, the logic circuit **126** could be programmed to activate the atomizing device **108** no more than five times during a 30 minute period. A cycle begins when a user first takes a puff on the inhalation device **10** after an extended period of inactivity, thereby activating the atomizing device **108**. The clock **122**, functioning as a timer, begins tracking elapsed time. If the user takes four more puffs (for a total of five puffs) before 30 minutes elapse, then the logic circuit **126** will not activate the atomizing device **108** for the remainder of the 30-minute period, even if the user takes further puffs on the inhalation device **10**. After 30 minutes, the timer is reset and the logic circuit **126** will again permit activation of the atomizing device **108**. The cycle would restart upon the next puff by the user. A maximum of five puffs over a 30 minute period is given by example only; any number of puffs and any period of time could be utilized. The maximum number of permitted activations and the length of the set period of time can be changed by programming the logic circuit **126**.

[0044] Yet another approach would be to use the clock **122** to track cumulative on-time of the atomizing device **108**. When the cumulative on-time of the atomizing device **108** reaches a predetermined value (through one or more puffs), then the atomizing device **108** would be turned off (i.e., not activated even if the user puffs on the inhalation device **10** and triggers the pressure transducer **38**) for a predetermined period of time. That is, the logic circuit **126** would not activate the atomizing device **108** even if the user puffs on the inhalation device **10** during the predetermined period of time. Once the predetermined period of time elapses, the cumulative on-time is reset to zero and the logic circuit **126** again allows the atomizing device **108** to be activated.

[0045] The user can re-program the control electronics using one or more of the input devices **124** to change the maximum dosage discharged with a single puff and/or the maximum number of doses that can be discharged during a set period of time. The metering programming can be based on factors such as the type of deliverable being used (i.e., different metering depending on the deliverable). In some instances, the metering programming is simply a matter of the user's individual preferences. That is, the user can program whatever maximum dosage and number of dosage he or she desires. In other instances, at least with respect to certain deliverables, the user's ability to change or program the metering can be restricted based on regulatory limits. For instance, the Food and Drug Administration or other agencies may place limits on the maximum possible dosage for deliverables such as nicotine and THC. In this case, the control electronics would be configured so that it would be impossible to program the device to exceed such limits.

[0046] As mentioned above, the inhalation device **10** has output devices (e.g., the indicator light **20**, the display **22**, and the audio signal device **128**) for providing feedback to the user. By illuminating when the user puffs on the inhalation device **10**, the indicator light **20** indicates operation of the inhalation device **10**. This indication can be supplemented by the audio signal device **128** emitting a sound when the user puffs on the inhalation device **10**. The audio signal device **128** could also produce another audio signal when the inhalation device **10** is not being used properly. The indicator light **20** can also be used to indicate power remaining status. For instance, if the power level of the power source **42** falls below a predetermined threshold level, then the logic circuit **126** can cause the indicator light **20** to flash repeatedly to provide an indication of the low power level. The display **22** could also be used to provide a low battery warning, either in addition to, or instead of, the indicator light **20**.

[0047] The indicator light **20** can be a single color or multi-color light. If multi-color, the indicator light **20** can be operated so as to produce a different color depending on the deliverable of the medium in the cartridge **16**. For example, the light **20** could be blue for nicotine, brown for caffeine, green for THC, orange for medications, and so on. These color indications could also be supplemented by unique sounds emitted from the audio signal device **128** depending on the deliverable.

[0048] The display **22** can utilize any suitable display technology, including but not limited to LED, LCD and E Ink. The display **22** can cover only a portion of the electronics section housing **24**, as shown in the FIGS. **1** and **2**, or it can cover the entire outer surface of the electronics section housing **24**. The display **22** is useful for displaying a variety of information to the user. Types of information that can be displayed include

instructions for using the inhalation device **10**, the type of deliverable being used, the number of remaining doses under the metering regimen, the current count of dosages; the time out period, and other metering feedback. The display **22** can also show logos and/or decorations, which can be changeable.

[0049] The control electronics can also be programmed to retain device operation information for later download over a synchronization channel. The type of data collected could include puffs per day, puffs per minute, cartridges used, average dosage, etc. The collected data would typically be stored in the memory **120** and can be downloaded in any suitable manner. For instance, if the inhalation device **10** is provided with a programming port as described above, this port could be utilized to connect the inhalation device **10** to a computer with a USB cable or the like and download the data to the computer. The data alternatively could be downloaded wirelessly. The data download would allow users to analyze their usage of the inhalation device **10**. This could be helpful for users who are using nicotine in the inhalation device **10** and trying to quit traditional smoking by allowing them to track their nicotine use and their progress.

[0050] The control electronics can provide operating modes other than the metering mode. For instance, the inhalation device **10** could have a party mode in which the indicator light **20** illuminates in different patterns, such as blinking or static. This could also involve a multi-color light that randomly changes color, either continuously or with each puff on the inhalation device **10**. The light could also change colors slowly; for example, the light could be red, then slowly change to orange, then slowly change to purple, then to blue, green and so on. A party mode could also involve varying audio outputs from the audio signal device **128** and varying decorations or logos shown on the display **22**.

[0051] Another possibility is a military mode. In this mode, the control electronics disable the indicator light **20** and the audio signal device **128** so that use of the inhalation device **10** in the field will not give away the soldier's position. The control electronics also randomly vary device operation times to suppress the RF signature of the inhalation device **10**. The dosing can also be changed based on mission parameters, e.g., caffeine delivery for military usage. The display **22** (particularly where it covers the entire outer surface of the electronics section housing **24**) can be caused to display a camouflage design.

[0052] A marketing mode can be provided for displaying inhalation devices at retail shops or the like. This could include programmed demonstrations and other unattended attraction features. For instance, the vaporizer **10** could provide various light displays or a scrolling message on the display **22**.

[0053] Other possible modes include a cooperative mode which permits device interactivity, such as an RF interface to a mobile phone, and a lock off mode in which the vaporizer **10** is turned off for security (i.e., to prevent unauthorized use) or to save battery power during shipment or other extended periods on non-use. The vaporizer **10** can also have various "key" encryption means to prevent use of unauthorized deliverables in the device. This could be accompanied by feedback such as disabling the atomizing unit **14**, flashing the indicator light **20**, an audio signal from device **128**, or a display on the display **22**. The vaporizer **10** could also have an administration mode in which an administrator would be enabled to adjust, update or delete any operations. An authorized user mode is also possible. This would be similar to the administration mode but without as many privileges. It is possible that any of the operating modes could be run independently, or a combination of modes could be run together and prioritized by the control electronics.

[0054] The control electronics can also dictate operational parameters to protect the vaporizer **10** and the user. For instance, the control electronics can control operation to prevent overheating of the medium and/or the atomizing unit **14**, adjust for maximum battery life, and adjust for charging time. Feedback parameters for providing warnings such as low battery or imminent overheating as also provided.

[0055] While specific embodiments of the present invention have been described, it should be noted that various modifications thereto can be made without departing from the spirit and scope of the invention as defined in the appended claims.

What is claimed is:

1. A personal inhalation device comprising:

an outer shell having an orifice formed therein and containing a medium having one or more deliverables;

an atomizing unit disposed within said shell, whereby said atomizing unit atomizes said medium when a user puffs on said orifice such that vapor containing said deliverables is discharged through said orifice; and

control electronics for controlling operation of said personal inhalation device, wherein said control electronics meter the deliverables discharged with said vapor.

2. The personal inhalation device of claim **1** wherein said control electronics control the maximum amount of deliverables discharged during a single puff.

3. The personal inhalation device of claim **2** wherein said control electronics control the maximum amount of deliverables discharged during a single puff by controlling the on-time of said atomizing unit.

4. The personal inhalation device of claim **2** wherein said control electronics control the maximum amount of deliverables discharged during a single puff based on temperature in said atomizing unit.

5. The personal inhalation device of claim **2** further comprising means for programming said control electronics to change the maximum amount of deliverables discharged during a single puff.

6. The personal inhalation device of claim **1** wherein said control electronics control the maximum number of deliverable doses discharged during a set period of time.

7. The personal inhalation device of claim **6** wherein said control electronics control the maximum number of deliverable doses discharged during a set period of time by controlling a minimum time interval between activations of said atomizing unit.

8. The personal inhalation device of claim **6** wherein said control electronics control the maximum number of deliverable doses discharged during a set period of time by controlling the number of activations of said atomizing unit permitted during said set period of time.

9. The personal inhalation device of claim **6** wherein said control electronics control the maximum number of deliverable doses discharged during a set period of time based on the cumulative on-time of said atomizing unit.

10. The personal inhalation device of claim **6** further comprising means for programming said control electronics to change the maximum number of deliverable doses discharged during a set period of time.

11. The personal inhalation device of claim **1** wherein said control electronics control the maximum amount of deliverables discharged during a single puff and the maximum number of deliverable doses discharged during a set period of time.

12. The personal inhalation device of claim **1** further comprising an indicator light, wherein said indicator light is an assembly comprising:

a translucent base member mounted in one end of said outer shell, said base member having a socket formed therein;

a translucent lens member having a body portion defining an outer surface, a first connector extending from one end of said body portion, and a second connector extending from another end of said body portion, said first connector being inserted into said socket;

a tip member mounted on said second connector; and

a light source mounted on said base member, said light source illuminating said outer surface of said body portion when activated.

13. The personal inhalation device of claim **12** wherein said light source is a bi-directional light-emitting diode.

14. The personal inhalation device of claim **12** wherein said control electronics can be programmed to disable said light source.

15. The personal inhalation device of claim **1** further comprising a multi-color indicator light that produces a different color depending on the deliverable contained in said outer shell.

16. The personal inhalation device of claim **1** further comprising a display for outputting information about said personal inhalation device.

17. The personal inhalation device of claim **1** further comprising an audio signal device for outputting information about said personal inhalation device.

18. The personal inhalation device of claim **1** wherein said control electronics are programmed to retain operation information and further comprising means for downloading said operation information.

* * * * *