US 20130220316A1

(19) United States

(12) Patent Application Publication

Oglesby et al.

(10) Pub. No.: US 2013/0220316 A1

(43) Pub. Date: Aug. 29, 2013

(54) **PORTABLE HANDHELD VAPORISING DEVICE**

(75) Inventors: **Alfred Peter Oglesby**, Carlingford (IE); **John Paul Oglesby**, Shrule (IE); **John Joseph Storey**, Portlaoise (IE)

(73) Assignee: **OGLESBY & BUTLER RESEARCH & DEVELOPMENT LIMITED**, Carlow (IE)

(21) Appl. No.: **13/639,402**

(22) PCT Filed: **Apr. 6, 2011**

(86) PCT No.: **PCT/IE2011/000021**

§ 371 (c)(1), (2), (4) Date: **May 17, 2013**

(30) **Foreign Application Priority Data**

Apr. 6, 2010 (IE) S2010/0199

Publication Classification

(51) **Int. Cl.**
A24F 47/00 (2006.01)

(52) **U.S. Cl.**
CPC ***A24F 47/006*** (2013.01); ***A24F 47/008*** (2013.01)
USPC **128/202.21**

(57) **ABSTRACT**

A portable handheld vaporising device (**1**) comprises a housing (**2**) within which a vaporising chamber (**7**) is formed, wherein a liquid in a container (**11**) is vaporised to form an aerosol. A heatable element (**21**) having a dished abutment surface (**22**) is located in the vaporising chamber (**7**), and is heated by a gas powered heater (**20**) located in a main chamber (**8**) of the housing (**2**). A wick (**18**) extending through a port (**17**) of the container (**11**) is located spaced apart from the heatable element (**21**) when the container (**11**) is in a first state illustrated in FIG. **3**. The container (**11**) is depressable into the housing (**2**) into a second state for engaging the wick (**18**) with the abutment surface (**22**) of the heatable element (**21**) for evaporating liquid which is wicked through the wick (**18**) from the container (**11**). A draw pipe (**27**) terminating in a mouthpiece (**29**) draws an aerosol of the vapour evaporated from the liquid for inhaling thereof. Inlet ports (**28**) accommodate air into the vaporising chamber (**7**) for forming the aerosol during drawing on the draw pipe (**27**).

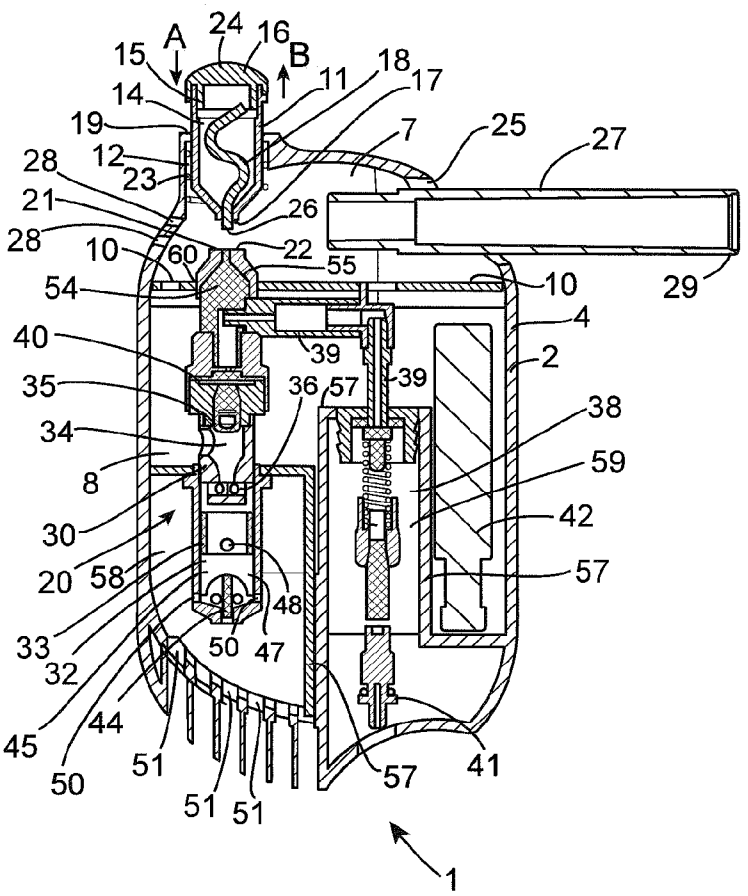

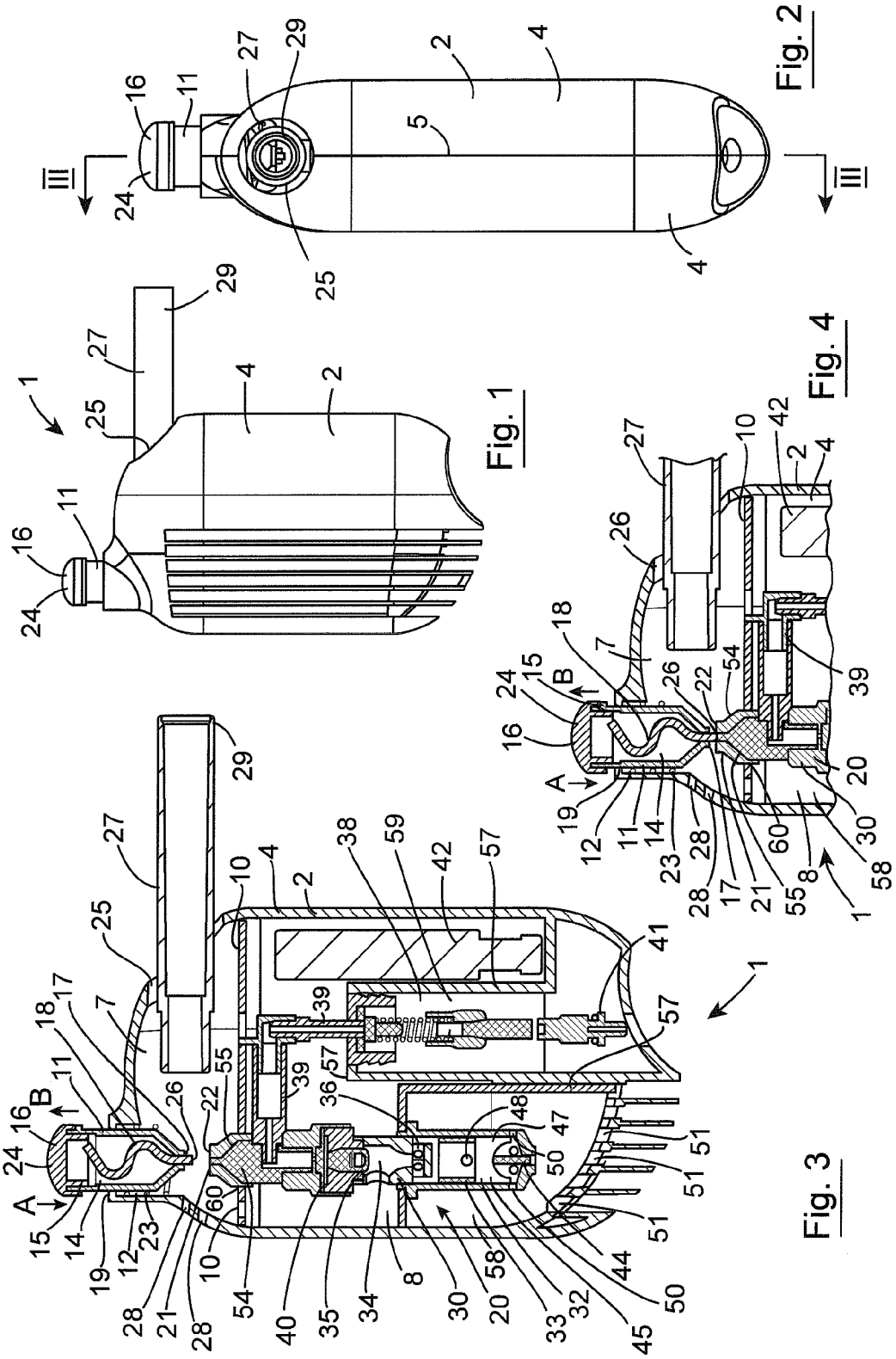

Fig. 1

Fig. 2

Fig. 3

Fig. 4

PORTABLE HANDHELD VAPORISING DEVICE

[0001] The present invention relates to a portable handheld vaporising device for vaporising a liquid to produce a vapour thereof, and in particular, though not limited to a portable handheld vaporising device to produce an aerosol of such a vapour.

[0002] Portable handheld vaporising devices are known for vaporising liquids to form an aerosol, which can then be inhaled. Such vaporising devices typically are provided for vaporising a liquid which carries a medicinal drug, nicotine or any other chemical, be it naturally occurring or a synthesised chemical for inhaling thereof. Where such portable handheld vaporising devices are provided for vaporising a liquid which includes nicotine, they are commonly referred to as "E cigarettes".

[0003] In general, vaporising devices of the type commonly referred to as E cigarettes comprise a housing within which a vaporising chamber is located, and a container for a nicotine carrying liquid is located adjacent the vaporising chamber. An absorbent pad of spongy material into which the nicotine carrying liquid is absorbed is located in the container, and a portion of the absorbent pad is exposed and is in continuous contact with a hot plate which is located in the vaporising chamber, and which is heated to evaporate the nicotine carrying liquid absorbed in the absorbent pad adjacent the hot plate. A battery powered electrical heater is provided to heat the hot plate for evaporating the nicotine carrying liquid. In order to conserve power in the battery, the heater is only powered up when a person wishes to draw a puff of an aerosol containing the vaporised nicotine carrying liquid from the vaporising chamber.

[0004] A pressure sensor is suitably located to detect a drop in pressure resulting from a person commencing to draw a puff of the aerosol. The electrically powered heater is activated in response to a drop in pressure being detected by the pressure sensor, and commences to heat the hot plate. However, this results in a delay before an aerosol of the nicotine carrying liquid is available, since it takes some time for the hot plate to be raised to a temperature sufficient to evaporate the nicotine carrying liquid in the absorbent pad adjacent the hot plate. Indeed, in many cases it can take between two and three seconds, and in some cases up to five seconds for the hot plate to be brought up to a suitable temperature by the electrically powered heater in order to evaporate the nicotine carrying liquid to form the aerosol. This is undesirable.

[0005] Indeed, a further problem with such devices is that in general it is necessary to maintain the draw on the vaporising chamber while the hot plate is being brought up to temperature by the heater, otherwise, in the absence of a pressure drop being detected by the pressure sensor, the heater is deactivated. This is likewise undesirable, since some people may not have sufficient drawing power to continuously draw on the vaporising chamber until the aerosol becomes available.

[0006] A further problem with such devices is that by virtue of the fact that the absorbent pad in which the nicotine carrying liquid is absorbed in the container is in continuous contact with the hot plate, the absorbent pad rapidly deteriorates due to the heat applied to the pad by the hot plate, to the extent that its wicking capacity is significantly reduced, and in particular, is significantly reduced adjacent the hot plate. Thereby the capacity of the absorbent pad to wick the nicotine carrying liquid to the hot plate for evaporation thereof is compromised.

[0007] A further problem with such devices is that in general, in order to activate the heater, a relatively high pressure drop is required to be detected by the pressure sensor. This is also undesirable, and can cause discomfort to a person using the device.

[0008] Other such vaporising devices which are adapted for vaporising a liquid, which carries other constituents besides nicotine, to produce an inhalable aerosol are known, and in general, such devices suffer from all or some of the problems discussed above.

[0009] The present invention is directed towards addressing at least some of the problems of known portable handheld vaporising devices.

[0010] According to the invention there is provided a portable handheld vaporising device comprising a housing defining a vaporising device comprising a vaporising chamber, a heatable element located in the vaporising chamber, a container defining a hollow interior region for a liquid, an applicator means for applying liquid from the container to the heatable element for evaporation thereof, one of the applicator means and the heatable element being adapted for selectively applying liquid from the container to the heatable element, an outlet port from the vaporising chamber for accommodating one of a vapour and an aerosol of the vapour from the vaporising chamber, and a heating means for heating the heatable element.

[0011] In one embodiment of the invention the one of the applicator means and the heatable element is moveable relative to the other of the applicator means and the heatable element for applying liquid from the container to the heatable element.

[0012] In another embodiment of the invention the applicator means comprises a wick extending outwardly from the container and communicating with the hollow interior region of the container. Preferably, the one of the wick and the heatable element is moveable between a first state with the wick and the heatable element spaced apart from each other, and a second state with the wick and the heatable element in engagement with each other for applying liquid from the container to the heatable element. Advantageously, the wick is moveable relative to the heatable element between the first state and the second state.

[0013] In another embodiment of the invention the container is mounted in the housing, and is moveable with the wick between the first state and the second state. Preferably, the container is slideably mounted in the main housing, and is slideable between the first state and the second state. Advantageously, the container is slideable into the vaporising chamber from the first state to the second state. Ideally, the container is manually slideable from the first state to the second state.

[0014] In one aspect of the invention a portion of the container extends outwardly through the housing, and terminates in a finger accommodating button for engagement by a thumb or a finger of a person for manual urging the container from the first state to the second state.

[0015] In another aspect of the invention an urging means is provided for urging the container in a direction from the second state to the first state. Preferably, the urging means comprises a resilient element. Advantageously, the resilient element is located to act between the container and the housing. Ideally, the urging means comprises a spring.

[0016] In another aspect of the invention the wick extends outwardly from the container in a direction towards the heat-

able element. Preferably, a portion of the wick extending from the container terminates in a distal end, and the distal end of the wick is engageable with the heatable element when the moveable one of the wick and the heatable element is in the second state.

[0017] In another aspect of the invention the wick is of a heat resistant material. Preferably, the heat resistant material of the wick is heat resistant at least up to a temperature corresponding to the temperature of vaporisation of the liquid in the container. Advantageously, the wick is of an absorbent material. Preferably, the wick extends into the hollow interior region of the container.

[0018] In a further aspect of the invention the container is refillable. Preferably, the container comprises a filling opening located in the container externally of the housing. Advantageously, a closure cap engageable with the container closes the filling opening. Advantageously, the finger accommodating button is formed on the closure cap.

[0019] In one embodiment of the invention an inlet port is provided to the vaporising chamber for accommodating air into the vaporising chamber to produce an aerosol of the vapour therein.

[0020] In another embodiment of the invention the outlet port from the vaporising chamber is adapted to receive a draw pipe.

[0021] In a further embodiment of the invention the vaporising device comprises the draw pipe, and the draw pipe terminates at a distal end thereof in a mouthpiece.

[0022] In one aspect of the invention the heatable element defines an abutment surface for receiving liquid from the applicator means. Preferably, the abutment surface is of slightly dished shape. Advantageously, the heatable element is of a heat conductive material.

[0023] In one aspect of the invention the heating means is in heat transfer relationship with the heatable element.

[0024] In one embodiment of the invention the heating means is adapted to produce a heat output which is matched to the thermal mass of the heatable element so that the heatable element and the heating means are thermally balanced, and the temperature of the heatable element is maintained at a temperature suitable for evaporating liquid from the container.

[0025] In a further embodiment of the invention the housing defines a heater accommodating chamber for accommodating the heating means. Preferably, the heater accommodating chamber is sealably isolated from the vaporising chamber.

[0026] In one embodiment of the invention the heating means comprises a gas powered heating means.

[0027] In another embodiment of the invention the heating means comprises a body member defining a combustion chamber.

[0028] In one aspect of the invention a gas catalytic combustion element is located in the combustion chamber for converting fuel gas to heat.

[0029] Preferably, the body member is of heat conducting material.

[0030] In another aspect of the invention an ignition means is provided for igniting the fuel gas to initially burn with a flame for raising the temperature of the gas catalytic combustion element to its ignition temperature. Preferably, the gas catalytic combustion element is located so that on the gas catalytic combustion element being raised to its ignition temperature, the flame of the initial flame combustion is starved of fuel gas and is extinguished.

[0031] In another embodiment of the invention a thermostatic control means is provided for controlling the temperature of the heatable element. Preferably, the thermostatic control means is adapted for controlling the temperature of the heatable element by controlling flow of fuel gas to the combustion chamber.

[0032] In another embodiment of the invention a thermal mass is located in heat conducting engagement with the gas catalytic combustion element for maintaining a portion of the gas catalytic combustion element adjacent the thermal mass at a temperature at or above the ignition temperature of the gas catalytic combustion element during short time periods during which the gas catalytic combustion element is isolated from the fuel gas by the thermostatic control means.

[0033] Ideally, the body member of the heating means is in heat conducting engagement with the heatable element.

[0034] In another embodiment of the invention a fuel gas reservoir is provided for storing fuel gas, the fuel gas reservoir being coupled to the heating means. Preferably, the fuel gas reservoir is refillable.

[0035] In another embodiment of the invention a reservoir chamber is located in the housing for accommodating the fuel gas reservoir.

[0036] In an alternative embodiment of the invention the heating means comprises an electrically powered heating means.

[0037] In one aspect of the invention the heating means comprises an electrically powered heating element.

[0038] In another aspect of the invention the electrically powered heating element comprises a resistive heating element.

[0039] In one aspect of the invention the electrically powered heating element comprises a positive temperature coefficient device.

[0040] In another aspect of the invention the electrically powered heating element comprises a ceramic device.

[0041] In a further aspect of the invention the electrically powered heating element comprises a carbon element.

[0042] Preferably, the electrically powered heating means is battery powered.

[0043] In another embodiment of the invention the heatable element is of a specific thermal mass, and preferably, the heatable element is connected to the heating means by a heat transfer means for controlling heat transfer from the heating means to the heatable element.

[0044] In another aspect of the invention the housing is formed by a pair of shells, which when joined together form the vaporising chamber. Preferably, the shells when joined together define the heater accommodating chamber. Advantageously, the pair of shells when joined together to form the housing define the reservoir accommodating chamber.

[0045] In one aspect of the invention a partition wall extending between the shells when joined together to form the housing isolates the vaporising chamber from the heater accommodating chamber.

[0046] In another aspect of the invention the housing is of a plastics material.

[0047] In a further aspect of the invention the housing is of a heat resistant plastics material.

[0048] The advantages of the invention are many. A particularly important advantage of the invention is that there is no delay between drawing on the draw pipe and an aerosol of

the vaporised liquid being available. This is achieved by virtue of the fact that the heating means is maintained active while the vaporising device is in use, and thus, once the one of the applicator means and the heatable element is urged from the first state to the second state for depositing liquid onto the heatable element, liquid applied to the heatable element is immediately evaporated to form a vapour which in turn forms the aerosol, as air is being drawn through the vaporising chamber. Thus, once the moveable one of the applicator means and the heatable element is moved for bringing the moveable one of the applicator means and the heatable element into engagement with the other one of the application means and the heatable element either just prior to or simultaneously with the commencement of drawing of the aerosol from the vaporising chamber, the aerosol will be immediately available and will be drawn from the vaporising chamber.

[0049] By providing the applicator means in the form of a wick, the liquid is readily easily wicked from the container and applied to the heatable element, without any leakage or loss of liquid.

[0050] A further advantage of the invention is that the quantity of liquid to be applied to the heatable element can be readily controlled. This advantage is achieved in particular when the applicator means is provided by a wick. The provision of the wick provides a relatively constant rate of transfer of the liquid therethrough, and thus, the quantity of the liquid to be evaporated applied to the heatable element is determined by the length of time the wick is brought into engagement with the heatable element. A further and particularly important advantage of the invention is achieved by virtue of the fact that when the applicator means is provided by a wick, the wick is only brought into engagement with the heatable element when it is desired to apply the liquid to the heatable element. Thus, the wick is only in contact with the heatable element for relatively short time periods, and thus, little or no deterioration of the wick or its wicking capacity occurs. Indeed, by virtue of the fact that the wick is only in engagement with the heatable element for such relatively short periods of time, the wick will be sufficiently wetted by the liquid to avoid virtually any deterioration of the wick.

[0051] The invention will be more clearly understood from the following description of a preferred embodiment thereof, which is given by way of example only, with reference to the accompanying drawings, in which:

[0052] FIG. **1** is a side elevational view of a vaporising device according to the invention,

[0053] FIG. **2** is a front end elevational view of the vaporising device of FIG. **1**,

[0054] FIG. **3** is a transverse cross-sectional side elevational view of the vaporising device of FIG. **1** on the line of FIG. **2**, and

[0055] FIG. **4** is a transverse cross-sectional side elevational view of a portion of the vaporising device of FIG. **1**.

[0056] Referring to the drawings, there is illustrated a portable handheld vaporising device according to the invention, indicated generally by the reference numeral **1**, for vaporising a liquid to produce an inhalable aerosol. The liquid may be any suitable vaporisable liquid. Typical liquids would include a mixture of propylene glycol or vegetable glycerine along with flavourings and/or pure nicotine or other optional additive. The vaporising device **1** comprises a housing **2** of injection moulded plastics material formed in two half shells **4**, which when joined together along a seam **5** define a vaporising chamber **7** within which the liquid is vaporised, and a main chamber **8** which will be described below. The vaporising chamber **7** is sealably isolated from the main chamber **8** by a partition wall **10** which is integrally formed in two parts with the shells **4**, so that when the shells **4** are joined together along the seam **5** to form the housing **2**, the partition wall **10** sealably isolates the vaporising chamber **7** from the main chamber **8**.

[0057] A container **11** for the liquid to be vaporised is located in a bore **12** of circular transverse cross-section in the housing **2**, and defines a hollow interior region **14** for the liquid. The container **11** is refillable with liquid to be vaporised through a filling opening **15**, which is sealably closed by a closure cap **16** which is sealably engageable in the filling opening **15**. The container **11** is of cylindrical shape and tapers towards an outlet port **17**. A flange **19** extends around and inwardly into the bore **12**, and slideably accommodates the container **11** in the bore **12** for a purpose to be described below. An applicator means comprising a heat resistant absorbent wick **18** extends through the outlet port **17** from the container **11**, and extends into the hollow interior region **14** of the container **11** for absorbing the liquid therein and for dispensing the liquid from the hollow interior region **14** by a capillary wicking action.

[0058] A heatable element **21** extends from the main chamber **8** of the housing **2** into the vaporising chamber **7**, and co-operates with a distal end **26** of the wick **18** for selectively evaporating liquid from the container **11**, as will be described below. The heatable element **21** is of heat conductive material, namely, aluminium, and defines a slightly dished shape abutment surface **22** for engaging the distal end **26** of the wick **18**. A heating means, in this embodiment of the invention comprising a gas powered heater **20**, which is described below, is located in the main chamber **8** of the housing **2**, and is in heat conducting engagement with the heatable element **21** for heating thereof.

[0059] The container **11**, as mentioned above, is slideably mounted in the bore **12**, and is manually urgeable in the direction of the arrow A from a first state illustrated in FIG. **3** with the distal end **26** of the wick **18** spaced apart from the heatable element **21** to a second state illustrated in FIG. **4** with the distal end **26** of the wick **18** abutting the abutment surface **22** of the heatable element **21** for selectively applying the liquid from the container **11** to the abutment surface **22** of the heatable element **21** for vaporising the liquid. An urging means comprising a compression spring **23** located in the bore **12** and appropriately acting between the housing **2** and the container **11** resiliently urges the container **11** in the direction of the arrow B outwardly of the vaporising chamber **7** into the first state, and retains the container **11** in the first state with the distal end **26** of the wick **18** spaced apart from the abutment surface **22** of the heatable element **21**. The closure cap **16** forms a finger accommodating push button **24** engageable by a finger or thumb of a person using the vaporising device **1** for manually urging the container **11** in the direction of the arrow A from the first state to the second state to thereby selectively apply liquid from the container **11** to the abutment surface **22** of the heatable element **21** for vaporising the liquid.

[0060] An outlet port **25** through the housing **2** from the vaporising chamber **7** engages and accommodates a hollow tubular draw pipe **27** from the vaporising chamber **7** for accommodating an aerosol of the evaporated liquid therefrom. The draw pipe **27** terminates at its distal end in a

mouthpiece **29** for facilitating drawing on the draw pipe **27** for drawing the aerosol from the vaporising chamber **7** for inhaling thereof.

[0061] Air inlet ports **28** through the housing **2** to the vaporising chamber **7** accommodate air into the vaporising chamber **7** as the aerosol is being drawn from the vaporising chamber **7** through the draw pipe **27**. Vapour evaporated by the surface **22** of the heatable member **21** is entrained in the air as it is being drawn through the vaporising chamber **7** to form the aerosol, which is then drawn through the draw pipe **27**.

[0062] Turning now to the gas powered heater **20**, the gas powered heater **20** is substantially similar to a gas powered heater which is disclosed in PCT published Application Specification No. WO 2006/082571, and comprises a body member **30** which is constructed from a number of components all of heat conducting material, which in this embodiment of the invention is aluminium, and which are in heat conducting engagement with each other. The body member **30** defines a combustion chamber **32** within which a gas catalytic combustion element **33** is located for converting fuel gas to heat. In this embodiment of the invention the gas catalytic combustion element comprises a perforated metal substrate coated with a precious metal. A venture mixer **34** formed in the body member **30** mixes air with the fuel gas which is delivered into the venture mixer **34** by a jet orifice **35**, and the gas/air mixture is delivered from the venture mixer **34** into the combustion chamber **32** through a diffuser **36**.

[0063] A fuel gas reservoir **38** is located in the main chamber **8** for storing the fuel gas in liquid form. The fuel gas is delivered from the fuel gas reservoir **38** to the venturi mixer **34** through a fuel supply pipe **39** and a thermostatic control means, namely, a thermostatic control valve **40**, which is located in the body member **30**. The thermostatic control valve **40** controls the temperature of the body member **30**, and in turn the heatable element **21** by controlling the flow of fuel gas to the venturi mixer **34**. A filler valve **41** is provided for facilitating refilling of the fuel gas reservoir **38**.

[0064] A piezoelectric igniter **42** is located in the main chamber **8** for generating a high voltage which is applied to an electrode **44** which extends into the combustion chamber **32**. The electrode **44** is located adjacent an end **45** of the combustion chamber **32** which defines a flame combustion chamber **47**. The electrode **44** is located within the flame combustion chamber **47** spaced apart from the portion of the body member **30** which forms the flame combustion chamber **47**, so that when the high voltage is applied to the electrode **44** by the piezoelectric igniter **42**, a spark arcs from the electrode **44** to the body member **30** within the flame combustion chamber **47** for initially igniting the fuel gas to burn in a flame in the flame combustion chamber **47**.

[0065] The gas catalytic combustion element **33** is located relative to the flame combustion chamber **47** so that the root of the flame commences to raise the temperature of the gas catalytic combustion element **33** to its ignition temperature. On being raised to its ignition temperature, the gas catalytic combustion element **33** commences to convert the fuel gas to heat by catalytic conversion. In due course the flame is starved of fuel gas and is extinguished.

[0066] An on/off switch (not shown) in the housing **2** controls an isolating valve (also not shown) in the fuel supply pipe **39** for selectively controlling the supply of fuel gas from the reservoir to the thermostatic control valve **40**. A linkage (not shown) in the housing **2** connects the on/off switch (not shown) to the piezoelectric igniter **42** for activating the piezoelectric igniter **42** for activating the piezoelectric igniter **42** to apply the high voltage to the electrode **44** after the isolating valve (not shown) has been operated into the open state by the on/off switch (not shown) to ignite the fuel gas/air mixture in the flame combustion chamber **47** to burn with a flame.

[0067] A thermal mass **48** is secured to a portion of the gas catalytic combustion element **33**. The thermal mass **48** is of heat conducting material and is sized in order to maintain the portion of the gas catalytic combustion element **33** adjacent the thermal mass **48** at its ignition temperature during relatively short periods while the supply of fuel gas to the combustion chamber **32** is interrupted by the thermostatic control valve **40** as the temperature of the body member **30** is being controlled. Thus when fuel gas is reinstated to the gas catalytic combustion element **33**, the portion of the gas catalytic combustion element **33** adjacent the thermal mass **48** commences to convert fuel gas to heat. Thereafter, the remainder of the gas catalytic combustion element **33** rapidly rises to its ignition temperature.

[0068] These aspects of the gas powered heater **20** and its operation, as well as the thermostatic control valve **40** and the thermal mass **48** are described in PCT published Application Specification No. WO 2006/082571.

[0069] Primary exhaust gas ports **50** extend through the body member **30** from the combustion chamber **32** for accommodating exhaust gases from the combustion chamber **32** into the main compartment **8**. A plurality of secondary exhaust gas ports **51** extend through the housing **2** from the main chamber **8** for exhausting the exhaust gases to atmosphere.

[0070] A portion **54** of the body member **30** extends into a bore **55** in the heatable element **21** and engages the bore **55** with heat conducting engagement for transferring heat from the body member **30** to the heatable element **21**, and for maintaining the heatable element **21** at the appropriate temperature for vaporising the liquid when it is applied to the abutment surface **22** thereof by the wick **18**.

[0071] Partition walls **57** located in the main chamber **8** divide the main chamber **8** into a heater accommodating chamber **58** for accommodating the heater **20**, and a reservoir accommodating chamber **59** for accommodating the fuel gas reservoir **38**. Fuel gas from the combustion chamber **32** is exhausted into the heater accommodating chamber **58** from where it is in turn exhausted to atmosphere through the secondary exhaust ports **51**. The partition walls **57** sealably isolate the reservoir chamber **59** from the heater accommodating chamber **58**. The partition wall **10** sealably isolates the vaporising chamber **7** from the heater accommodating chamber **58** to avoid any danger of exhaust gases in the heater accommodating chamber **58** entering the vaporising chamber **7**. An opening **60** in the partition wall **10** accommodates the heatable element **21** into the vaporising chamber **7**, and the heatable element **21** is sealably located in the opening **60**, in order to avoid any danger of exhaust gases in the heater accommodating chamber **58** migrating into the vaporising chamber **7**.

[0072] In use, with the fuel gas reservoir **38** charged with liquid fuel gas and the container **11** charged with the liquid to be vaporised, the vaporising device **1** is ready for use. The on/off switch (not shown) is operated for delivering fuel gas from the fuel gas reservoir **38** to the combustion chamber **32**. Operation of the on/off switch (not shown) also activates the piezoelectric igniter **42** to apply the high voltage to the electrode **44**, to in turn produce a spark in the flame combustion chamber **47** which causes the fuel gas/air mixture from the

venture mixer **34** to burn in a flame in the flame combustion chamber **47**. The gas catalytic combustion element **33** is rapidly raised to its ignition temperature by the root of the flame burning in the flame combustion chamber **47**, and then commences to convert the fuel gas to heat by a catalytic reaction. Thereafter the flame is quickly starved of fuel gas and is extinguished. The gas powered heater **20** continues to operate with the gas catalytic combustion element **33** converting the fuel gas/air mixture to heat. Heat is conducted from the combustion chamber **32** through the body member **30** of the heater **20** to the heatable element **21**, which is rapidly raised to an appropriate temperature by the gas powered heater **20** for evaporating the liquid.

[0073] When it is desired to inhale an aerosol of vapour of the liquid, the push button **24** is depressed in the direction of the arrow A into the housing **2** for urging the container **11** through the bore **12** from the first state to the second state with the distal end **26** of the wick **18** engaging the abutment surface **22** of the heatable element **21**, thereby applying liquid from the distal end **26** of the wick **18** from the container **11** to the abutment surface **22** of the heatable element **21**. The liquid is evaporated on coming into contact with the abutment surface **22** of the heatable element **21**. By drawing on the mouthpiece **29**, air is drawn into the vaporising chamber **7** through the air inlet ports **28** where it entrains the vapour of the liquid evaporated by the heatable element **21** to form an aerosol, which is then drawn through the draw pipe **27**. On release of the push button **24**, the spring **23** returns the container **11** in the direction of the arrow B to the first state with the distal end **26** of the wick **18** spaced apart from the heatable element **21**.

[0074] The fuel gas supply from the fuel gas reservoir **38** to the heater **20** is maintained during a session of use of the vaporising device **1**. At the end of a session, the on/off switch (not shown) is operated into an off state in order to operate the isolating valve (not shown) in the fuel gas supply pipe **39** into an isolating state for isolating the heater **20** from the fuel gas reservoir **18**. The thermostatic control valve **40** controls the supply of fuel gas to the combustion chamber **32** for maintaining the heatable element **21** at the appropriate temperature to vaporise the liquid, both during periods when the wick **18** is engaged with the heatable element **21** and when the wick **18** is disengaged from the heatable element **21**.

[0075] When the container **11** requires to be recharged, the closure cap **16** is removed from the filling opening **15**, and the hollow interior region **14** of the container **11** is charged with a fresh supply of the liquid. The closure cap **16** is then sealably engaged in the filling opening **15**.

[0076] Thereafter operation of the vaporising device continues, and each time a draw of the aerosol is required, the push button **24** is depressed towards the housing **2** for urging the container **11** from the first state to the second state for engaging the distal end **26** of the wick **18** with the abutment surface **22** of the heatable element **21** to vaporise the liquid.

[0077] While the liquid to be evaporated may be any suitable liquid, and may be a mixture of propylene glycol and/or vegetable glycerine along with one or more flavourings and/or pure nicotine, in this particular embodiment of the invention the vaporising device is particularly suitable for vaporising nicotine in a liquid carrier. Typically, it is envisaged that the nicotine will be concentrated nicotine in liquid form, and will be carried in a liquid propylene glycol carrier liquid. Typically, a liquid flavouring concentrate will also be included in the liquid carrier, which typically would provide a tobacco flavour, and the tobacco flavour could be a specific tobacco flavour specific to a particular type of tobacco plant or a blend of tobacco leaves. Alternatively, or additionally, a peppermint or other such flavouring concentrate which would similarly be in liquid form could be included in the liquid carrier along with the concentrated liquid nicotine and the liquid tobacco flavouring concentrate, or instead of the liquid tobacco flavouring concentrate.

[0078] While the means for selectively applying the liquid to be vaporised to the surface of the heatable element has been described as being provided by locating the container **11** to be moveable into and out of the vaporising chamber **7**, any other suitable means for selectively applying the liquid to the heatable element may be used. For example, in certain cases, the gas powered heater **20** may be moveable relative to the container for bringing the heatable element into engagement with the wick.

[0079] It is also envisaged that instead of providing a wick for applying the liquid from the container **11** to the surface of the heatable element, any other suitable means for selectively applying the liquid from the container **11** to the heatable element may be provided. For example, in certain cases, it is envisaged that a valve may be provided in the outlet port **17** of the container **11** which would be selectively operable for selective drip feeding of the liquid in the container **11** onto the abutment surface of the heatable element. In which case, the container **11** would be fixed relative to the housing **2**, and could be formed as an integral part of the housing **2**. It is also envisaged that a precision drip feed mechanism may be provided in the outlet port **17** of the container **11** which would be adapted to dispense a specific predefined volume of the liquid on each activation.

[0080] While the heating means has been described as comprising a gas powered heater, any other suitable heating means may be provided. While the gas powered heater has been described as comprising a gas catalytic combustion element for converting the fuel gas to heat by a catalytic reaction, it is envisaged in certain cases that the gas powered heater may be of the type which converts fuel gas to heat by flame combustion only. It is also envisaged that the heating means may be provided by an electrical heating means, for example, an electrically powered heating element or the like, and in which case, it is envisaged that the electrically powered heating element may comprise an electrical resistive heating element, a positive temperature coefficient element, an electrically powered ceramic heater element, a carbon heater element, an infrared heater, or heat emitted from a halogen light bulb.

[0081] While the body member **30** of the heater **20** has been described as being of aluminium, the body member may be of any other suitable heat conductive material, for example, brass, copper, or an alloy or any other suitable material. Additionally, it is envisaged that the heatable element may be of any other suitable heat conductive material, for example, brass, copper, or an alloy of any other suitable material. Further, it is envisaged that the heatable element may be of a ceramics material, as could the body member of the heater be of a ceramics material.

[0082] It is also envisaged that instead of providing the heater **20** with a thermostatic control valve, the heater **20** may be provided without any thermostatic control means, and in which case, it is envisaged that the heater and the heatable element would be thermally balanced. This would be achieved by providing the body member and the heatable element to be of a thermal mass which would be matched to

the heat output produced by the gas catalytic combustion element, so that the temperature of the heatable element would be maintained at a substantially constant temperature, which would be selected to be an appropriate temperature for vaporising the liquid. Furthermore, where a thermostatic control means is provided for controlling the flow of fuel gas to the heater, or where the body member of the heater and the heatable element are selected to be of a thermal mass to match the heat output of the gas catalytic combustion element, it will be appreciated that the thermostatic control means will be set, and the heat output from the gas catalytic combustion element will be such that the heatable element will be maintained at a substantially constant temperature, which will be suitable for evaporating the constituent to be evaporated from the liquid.

[0083] It is also envisaged that the heatable element may have a specific thermal capacity, and heat transfer from the heater to the heatable element would be controlled so that a quantity of heat corresponding to the thermal capacity of the heatable element would be transferred from the heater to the heatable element in a predefined time period. Where the heater is provided as a gas powered heater with a heat conductive body member, the body member of the heater would be connected to the heatable element by a heat transfer means, such as a heat conductive connector which would be connected to the heater and the heatable element with heat conducting engagement, and would be sized in order to control the heat transfer from the heater to the heatable element.

[0084] Needless to say, it is envisaged that the vaporising device may be adapted for vaporising any liquid, and it will of course be appreciated that where a thermostatic control means is provided for controlling the flow of fuel gas to the gas catalytic combustion element, or where the thermal mass of the body member of the heater and the heatable element are matched to the heat output from the gas catalytic combustion element, or where the heatable element is provided to have a specific thermal mass, it is envisaged that the temperature at which the heatable element is being maintained will be a temperature suitable for evaporating the liquid, and in particular, the constituent carried in the liquid for producing a vapour thereof in order to form the aerosol.

[0085] While the container for the liquid to be evaporated has been described as being of cylindrical shape and tapering towards the outlet port, it will be appreciated that the container for the liquid to be evaporated may be of any other suitable shape or construction. Indeed, in certain cases, it is envisaged that the container may be of square transverse cross-section, rectangular transverse cross-section, triangular transverse cross-section or any other polygonal transverse cross-section, oval transverse cross-section or the like.

[0086] It is also envisaged that the heater may be operated to be powered up each time a puff of the aerosol is to be drawn from the vaporising chamber, and on completion of drawing of the puff of the aerosol, the heater would be deactivated. The heater could be powered up in response to urging of the applicator means into engagement with the heatable element, and could be deactivated after a predefined time period had been timed out after powering up.

1-62. (canceled)

63. A portable handheld vaporising device comprising a housing defining a vaporising device comprising a vaporising chamber, a heatable element located in the vaporising chamber, a container defining a hollow interior region for a liquid, an applicator means for applying liquid from the container to the heatable element for evaporation thereof, one of the applicator means and the heatable element being adapted for selectively applying liquid from the container to the heatable element, an outlet port from the vaporising chamber for accommodating one of a vapour and an aerosol of the vapour from the vaporising chamber, and a heating means for heating the heatable element.

64. A vaporising device as claimed in claim **63** in which the one of the applicator means and the heatable element is moveable relative to the other of the applicator means and the heatable element for applying liquid from the container to the heatable element.

65. A vaporising device as claimed in claim **63** in which the applicator means comprises a wick extending outwardly from the container and communicating with the hollow interior region of the container.

66. A vaporising device as claimed in claim **65** in which the one of the wick and the heatable element is moveable between a first state with the wick and the heatable element spaced apart from each other, and a second state with the wick and the heatable element in engagement with each other for applying liquid from the container to the heatable element, and preferably, the wick is moveable relative to the heatable element between the first state and the second state, and advantageously, the container is mounted in the housing, and is moveable with the wick between the first state and the second state.

67. A vaporising device as claimed in claim **66** in which the container is slideably mounted in the main housing, and is slideable between the first state and the second state, and preferably, the container is slideable into the vaporising chamber from the first state to the second state, and advantageously, the container is manually slideable from the first state to the second state, and preferably, a portion of the container extends outwardly through the housing, and terminates in a finger accommodating button for engagement by a thumb or a finger of a person for manual urging the container from the first state to the second state.

68. A vaporising device as claimed in claim **66** in which an urging means is provided for urging the container in a direction from the second state to the first state, and preferably, the urging means comprises a resilient element, and advantageously, the resilient element is located to act between the container and the housing, and preferably, the urging means comprises a spring.

69. A vaporising device as claimed in claim **65** in which the wick extends outwardly from the container in a direction towards the heatable element, and preferably, a portion of the wick extending from the container terminates in a distal end, and the distal end of the wick is engageable with the heatable element when the moveable one of the wick and the heatable element is in the second state, and advantageously, the wick is of a heat resistant material, and preferably, the heat resistant material of the wick is heat resistant at least up to a temperature corresponding to the temperature of vaporisation of the liquid in the container, and advantageously, the wick is of an absorbent material, and preferably, the wick extends into the hollow interior region of the container.

70. A vaporising device as claimed in claim **63** in which the container is refillable, and preferably, the container comprises a filling opening located in the container externally of the housing, and advantageously, a closure cap engageable with the container closes the filling opening, and preferably, the finger accommodating button is formed on the closure cap.

71. A vaporising device as claimed in claim **63** in which an inlet port is provided to the vaporising chamber for accom-

modating air into the vaporising chamber to produce an aerosol of the vapour therein, and preferably, the outlet port from the vaporising chamber is adapted to receive a draw pipe, and preferably, the vaporising device comprises the draw pipe, and the draw pipe terminates at a distal end thereof in a mouthpiece, and advantageously, the heatable element defines an abutment surface for receiving liquid from the applicator means.

72. A vaporising device as claimed in claim **71** in which the abutment surface is of slightly dished shape.

73. A vaporising device as claimed in claim **63** in which the heatable element is of a heat conductive material, and preferably, the heating means is in heat transfer relationship with the heatable element, and advantageously, the heating means is adapted to produce a heat output which is matched to the thermal mass of the heatable element so that the heatable element and the heating means are thermally balanced, and the temperature of the heatable element is maintained at a temperature suitable for evaporating liquid from the container.

74. A vaporising device as claimed in claim **63** in which the housing defines a heater accommodating chamber for accommodating the heating means, and preferably, the heater accommodating chamber is sealably isolated from the vaporising chamber.

75. A vaporising device as claimed in claim **63** in which the heating means comprises a gas powered heating means, and preferably, the heating means comprises a body member defining a combustion chamber, and preferably, a gas catalytic combustion element is located in the combustion chamber for converting fuel gas to heat, and advantageously, the body member is of heat conducting material, and preferably, an ignition means is provided for igniting the fuel gas to initially burn with a flame for raising the temperature of the gas catalytic combustion element to its ignition temperature, and advantageously, the gas catalytic combustion element is located so that on the gas catalytic combustion element being raised to its ignition temperature, the flame of the initial flame combustion is starved of fuel gas and is extinguished.

76. A vaporising device as claimed in claim **75** in which a thermostatic control means is provided for controlling the temperature of the heatable element, and preferably, the thermostatic control means is adapted for controlling the temperature of the heatable element by controlling flow of fuel gas to the combustion chamber, and advantageously, a thermal mass is located in heat conducting engagement with the gas catalytic combustion element for maintaining a portion of the gas catalytic combustion element adjacent the thermal mass at a temperature at or above the ignition temperature of the gas catalytic combustion element during short time periods during which the gas catalytic combustion element is isolated from the fuel gas by the thermostatic control means.

77. A vaporising device as claimed in claim **75** in which the body member of the heating means is in heat conducting engagement with the heatable element, and preferably, a fuel gas reservoir is provided for storing fuel gas, the fuel gas reservoir being coupled to the heating means, and preferably, the fuel gas reservoir is refillable, and advantageously, a reservoir chamber is located in the housing for accommodating the fuel gas reservoir.

78. A vaporising device as claimed in claim **63** in which the heating means comprises an electrically powered heating means.

79. A vaporising device as claimed in claim **78** in which the electrically powered heating means comprises one of the following:

an electrically powered heating element,
a resistive heating element,
a positive temperature coefficient device,
a ceramic device, and
a carbon element.

80. A vaporising device as claimed in claim **78** in which the electrically powered heating means is battery powered.

81. A vaporising device as claimed in claim **63** in which the heatable element is of a specific thermal mass, and preferably, the heatable element is connected to the heating means by a heat transfer means for controlling heat transfer from the heating means to the heatable element.

82. A vaporising device as claimed in claim **63** in which the housing is formed by a pair of shells, which when joined together form the vaporising chamber, and preferably, the shells when joined together define the heater accommodating chamber, and advantageously, the pair of shells when joined together to form the housing define the reservoir accommodating chamber, and preferably, a partition wall extending between the shells when joined together to form the housing isolates the vaporising chamber from the heater accommodating chamber, and advantageously, the housing is of a plastics material, and preferably, the housing is of a heat resistant plastics material.

* * * * *