US008314591B2

(12) **United States Patent**
Terry et al.

(10) **Patent No.: US 8,314,591 B2**
(45) **Date of Patent: Nov. 20, 2012**

(54) **CHARGING CASE FOR A PERSONAL VAPORIZING INHALER**

(76) Inventors: **Nathan Andrew Terry**, San Francisco, CA (US); **Noah Mark Minskoff**, Salt Lake City, UT (US)

(*) Notice: Subject to any disclaimer, the term of this patent is extended or adjusted under 35 U.S.C. 154(b) by 277 days.

(21) Appl. No.: **12/780,877**

(22) Filed: **May 15, 2010**

(65) **Prior Publication Data**

US 2011/0278189 A1 Nov. 17, 2011

(51) **Int. Cl.**
H01M 10/46 (2006.01)

(52) **U.S. Cl.** **320/114**

(58) **Field of Classification Search** 320/103, 320/107, 112, 114, 115; 131/328, 329, 330, 131/175, 347, 348
See application file for complete search history.

(56) **References Cited**

U.S. PATENT DOCUMENTS

4,429,703	A	2/1984	Haber	
4,735,217	A	4/1988	Gerth et al.	
4,771,796	A	9/1988	Myer	
4,922,901	A	5/1990	Brooks et al.	
4,947,874	A	8/1990	Brooks et al.	
4,947,875	A	8/1990	Brooks et al.	
4,991,596	A	2/1991	Lawrence et al.	
5,060,671	A	10/1991	Counts et al.	
5,261,424	A	11/1993	Sprinkel, Jr.	
5,269,327	A	12/1993	Counts et al.	
5,353,813	A	10/1994	Deevi et al.	
5,408,574	A	4/1995	Das et al.	
5,573,692	A	11/1996	Das et al.	
5,666,977	A	9/1997	Higgins et al.	
5,730,158	A	3/1998	Collins et al.	
5,893,371	A	4/1999	Rose et al.	
6,024,097	A	2/2000	Von Wielligh	
6,095,153	A	8/2000	Kessler et al.	
6,125,853	A	10/2000	Susa et al.	
6,155,268	A	12/2000	Takeuchi	
6,196,218	B1	3/2001	Voges	
6,854,470	B1	2/2005	Pu	
8,156,944	B2 *	4/2012	Han	131/273
2002/0136886	A1	9/2002	He et al.	
2004/0055613	A1	3/2004	Horian	
2006/0196518	A1	9/2006	Hon	
2006/0283468	A1	12/2006	Lipowiez	
2007/0267031	A1	11/2007	Hon	
2008/0276947	A1	11/2008	Martzel	
2008/0302375	A1	12/2008	Andersson et al.	
2009/0095311	A1 *	4/2009	Han	131/194

(Continued)

OTHER PUBLICATIONS

International Search Report and Written Opinion of PCT/US2011/036252 issued Jan. 2, 2012, 9 pages.

(Continued)

Primary Examiner — Edward Tso
(74) *Attorney, Agent, or Firm* — The Neudeck Law Firm, LLC

(57) **ABSTRACT**

A personal vapor inhaling unit is disclosed. An electronic flameless vapor inhaler unit that may simulate a cigarette has a cavity that receives a cartridge in the distal end of the inhaler unit. The cartridge brings a substance to be vaporized in contact with a wick. When the unit is activated, and the user provides suction, the substance to be vaporized is drawn out of the cartridge, through the wick, and is atomized by the wick into a cavity containing a heating element. The heating element vaporizes the atomized substance. The vapors then continue to be pulled by the user through a mouthpiece and mouthpiece cover where they may be inhaled.

14 Claims, 25 Drawing Sheets

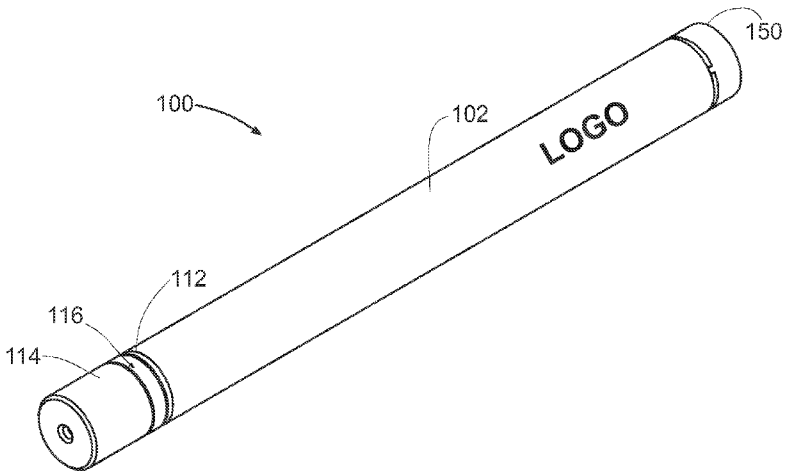

U.S. PATENT DOCUMENTS

2009/0095312	A1	4/2009	Herbrich et al.
2009/0126745	A1	5/2009	Hon
2009/0165808	A1	7/2009	Melahropoulos
2009/0260641	A1	10/2009	Monsees et al.
2009/0283103	A1	11/2009	Nielsen et al.
2010/0006113	A1	1/2010	Urtsev et al.

OTHER PUBLICATIONS

International Search Report and Written Opinion of PCT/US2011/036259 issued Jan. 2, 2012, 9 pages.
International Search Report and Written Opinion of PCT/US2011/036267 issued Jan. 10, 2012, 9 pages.
International Search Report and Written Opinion of PCT/US2011/036275 issued Jan. 10, 2012, 9 pages.
International Search Report and Written Opinion of PCT/US2011/036283 issued Jan. 4, 2012, 9 pages.
International Search Report and Written Opinion of PCT/US2011/036396 issued Jan. 17, 2012, 9 pages.
International Search Report and Written Opinion of PCT/US2011/036399 issued Jan. 18, 2012, 10 pages.
International Search Report and Written Opinion of PCT/US2011/032016 issued Dec. 20, 2011, 10 pages.
International Search Report and Written Opinion of PCT/US2011/032025 issued Dec. 20, 2011, 10 pages.
International Search Report and Written Opinion of PCT/US2011/036600 issued Jan. 18, 2012, 12 pages.
International Search Report and Written Opinion of PCT/US2011/036605 issued Jan. 18, 2012, 10 pages.
International Search Report and Written Opinion of PCT/US2011/036609 issued Jan. 19, 2012, 11 pages.
International Search Report and Written Opinion of PCT/US2011/036614 issued Jan. 19, 2012, 11 pages.

* cited by examiner

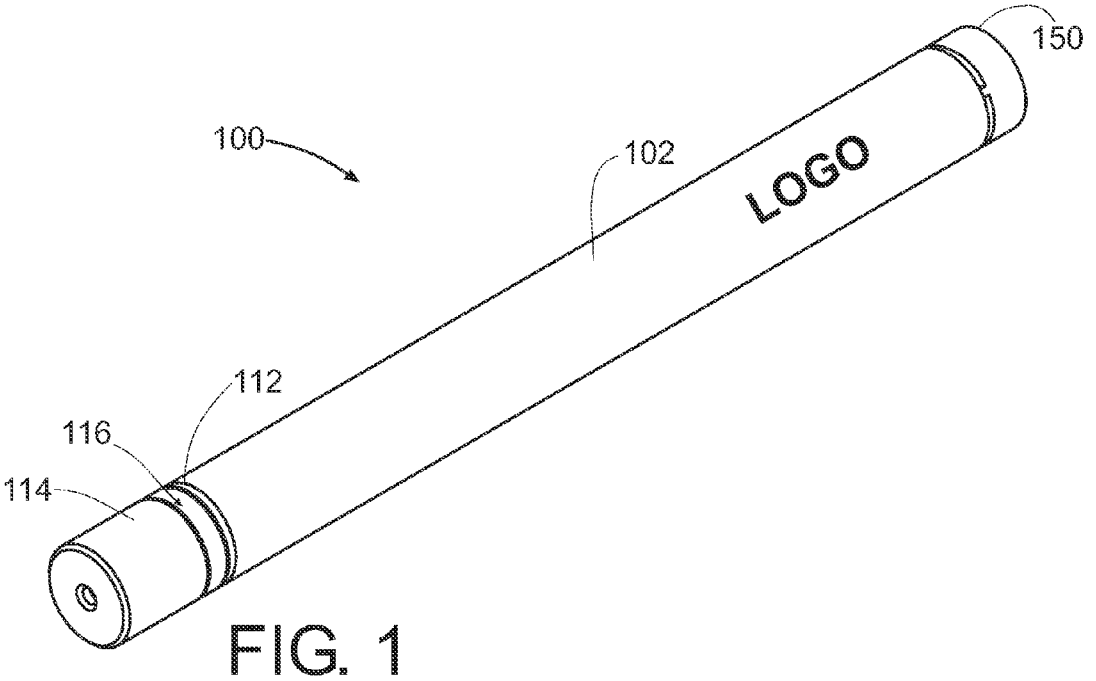

FIG. 1

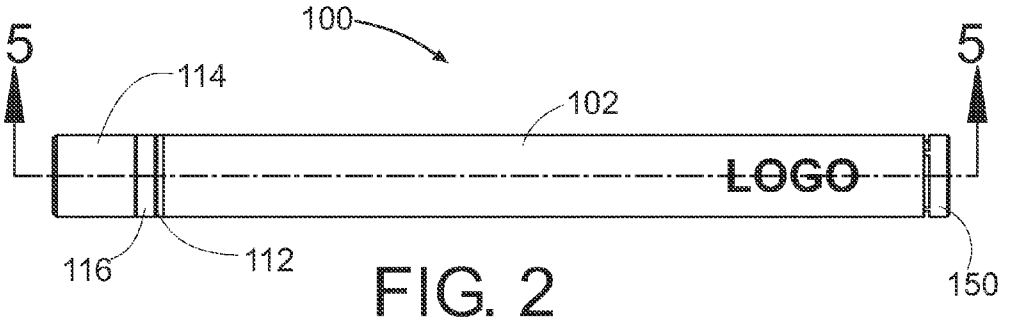

FIG. 2

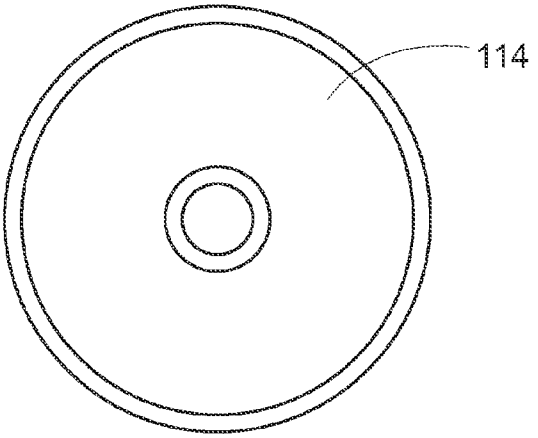

FIG. 3

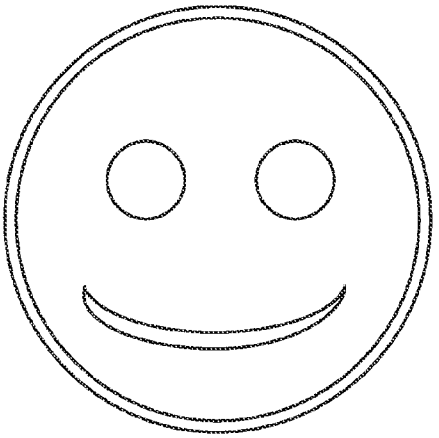

FIG. 4A

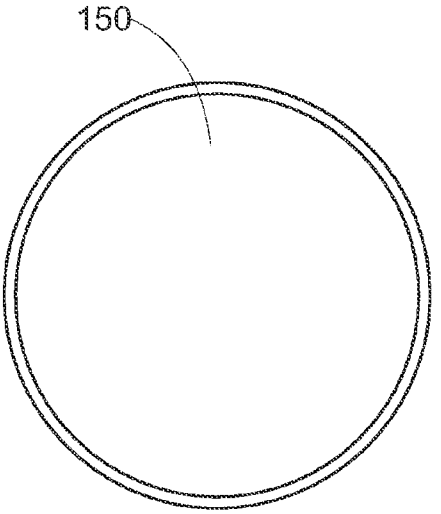

FIG. 4

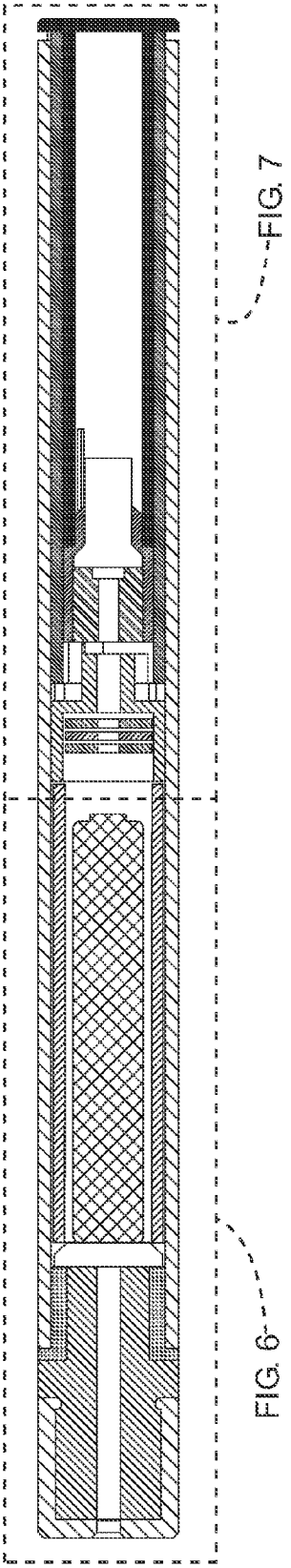

FIG. 5

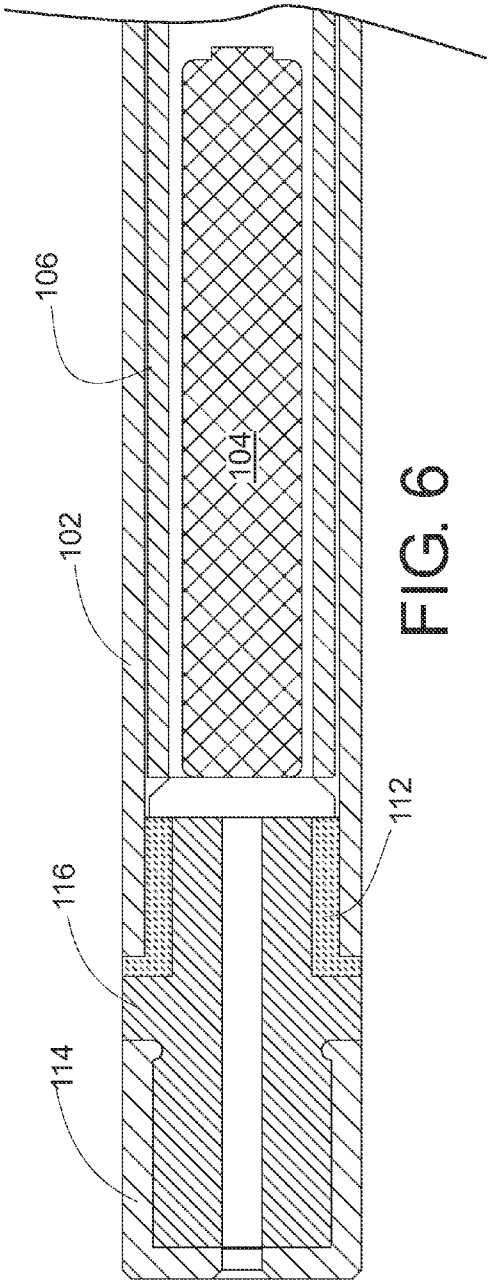

FIG. 6

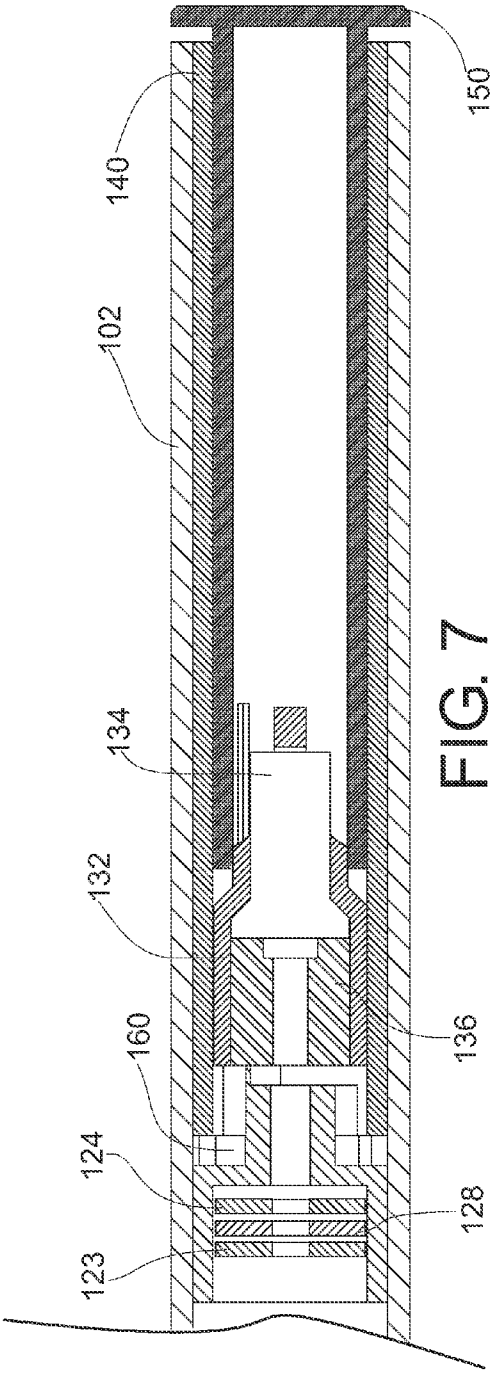

FIG. 7

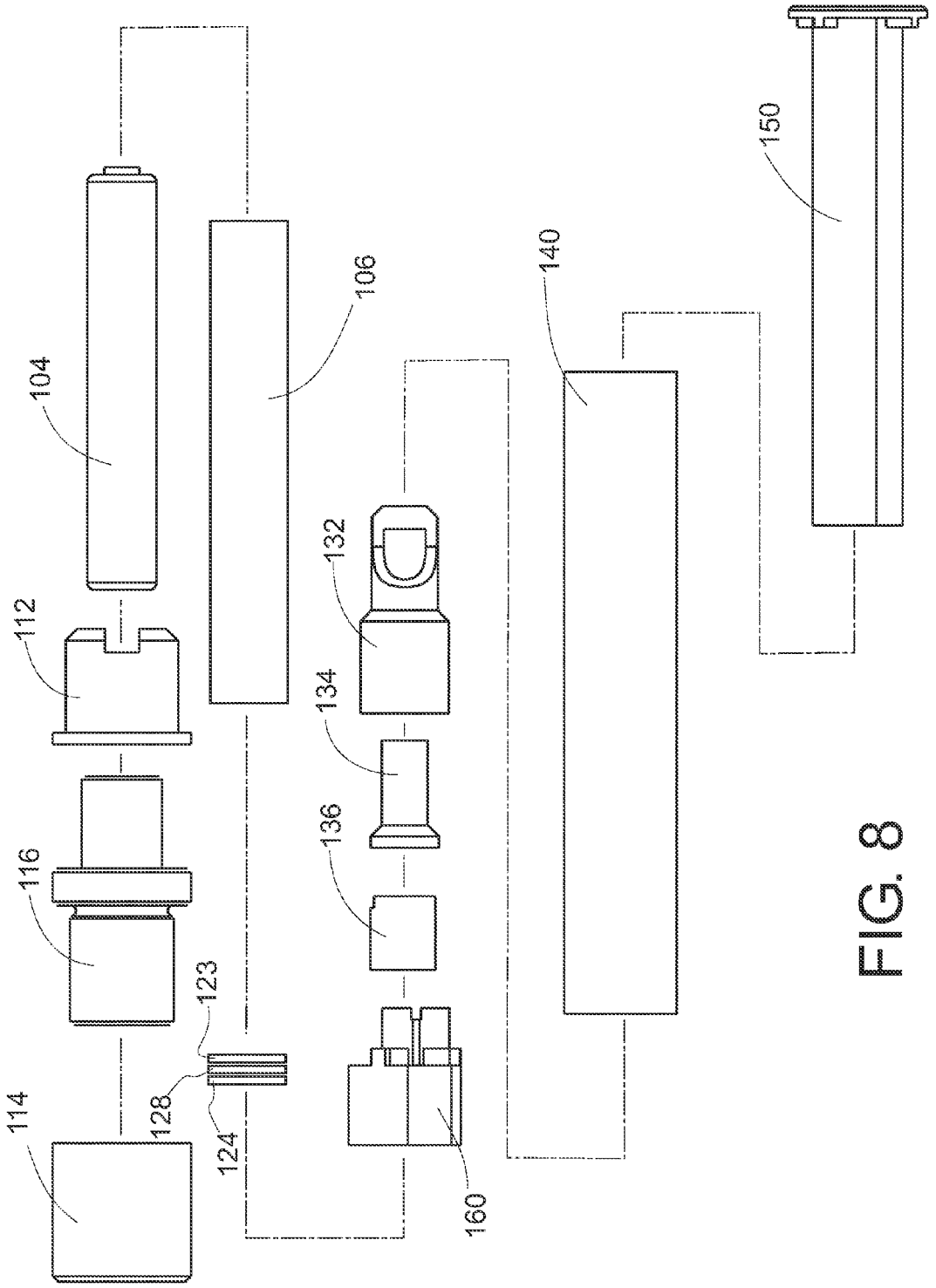

FIG. 8

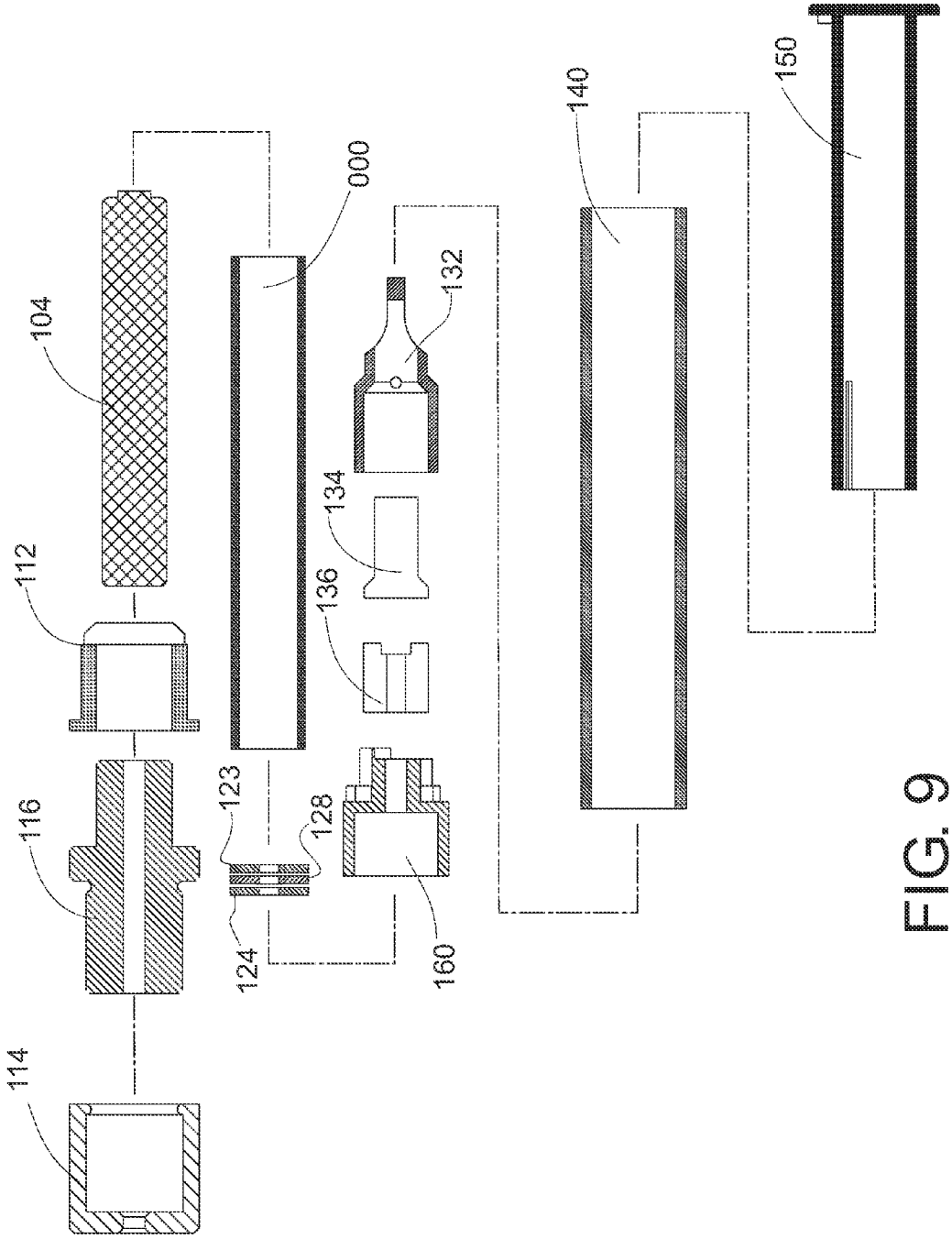

FIG. 9

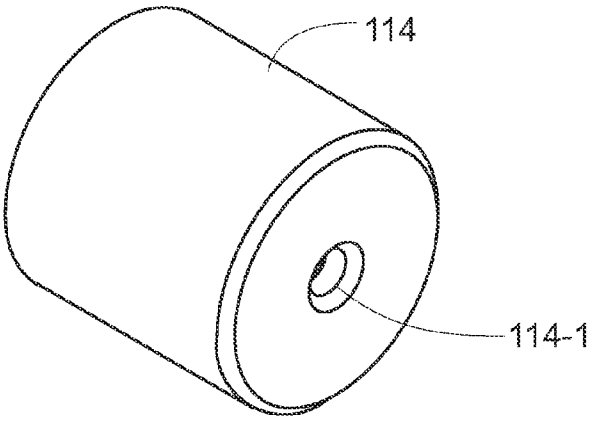

FIG. 10

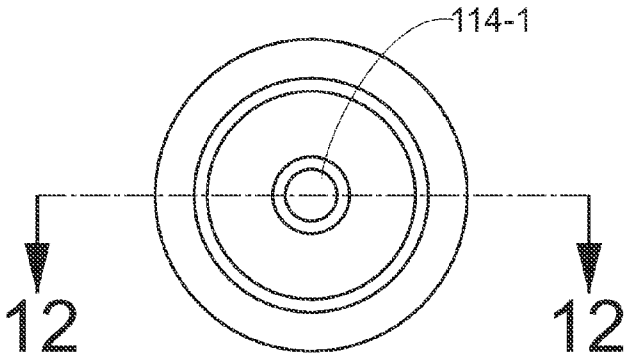

FIG. 11

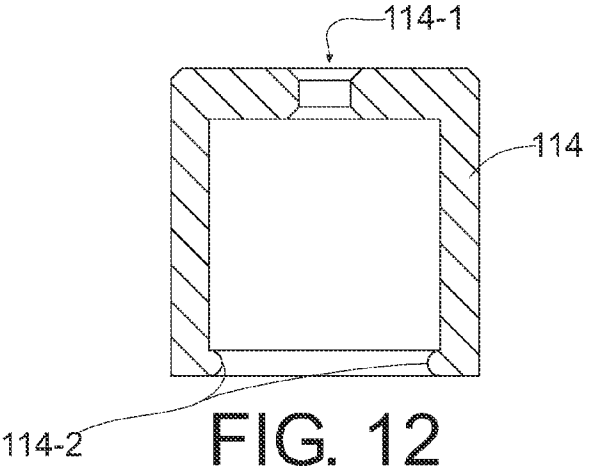

FIG. 12

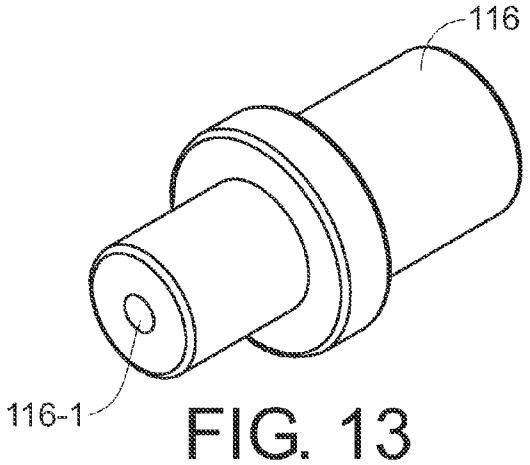

FIG. 13

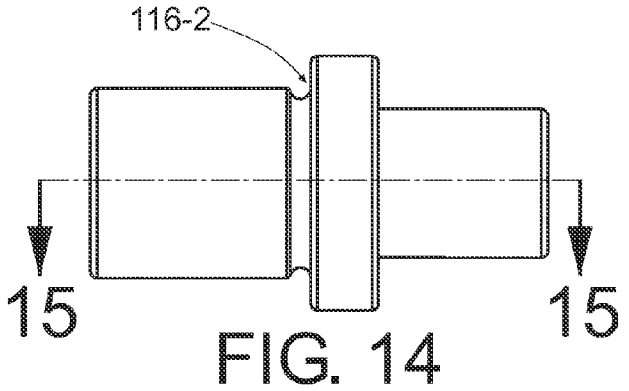

FIG. 14

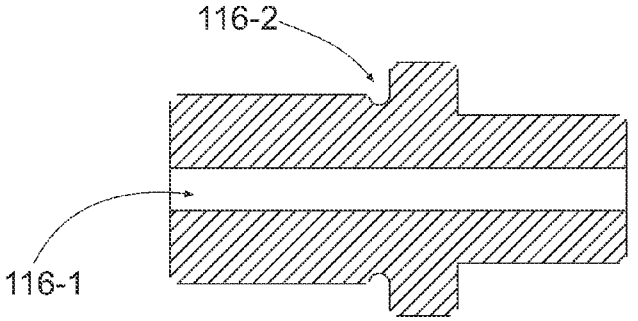

FIG. 15

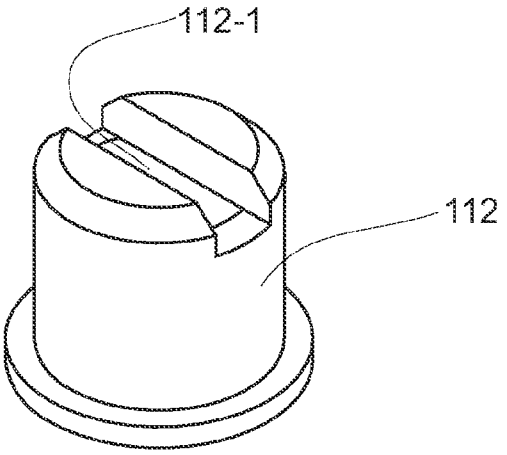

FIG. 16

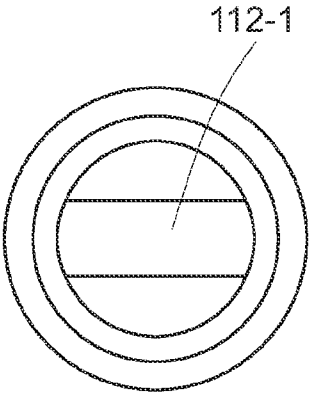

FIG. 17

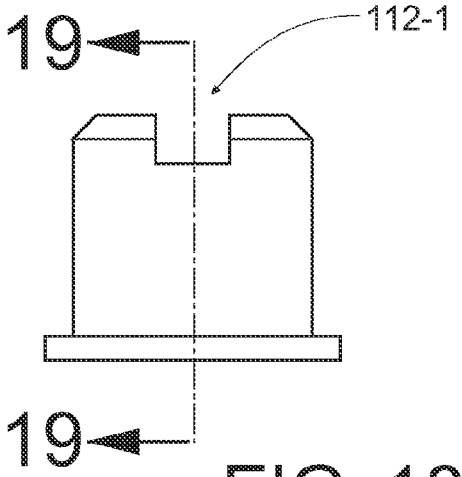

FIG. 18

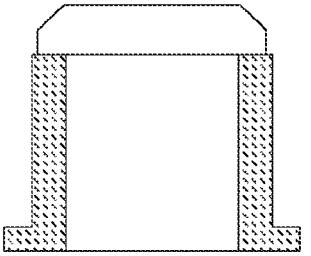

FIG. 19

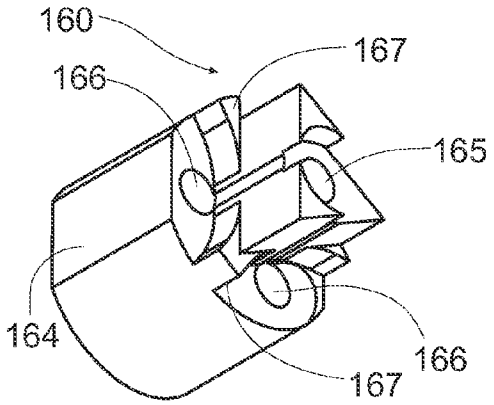

FIG. 20

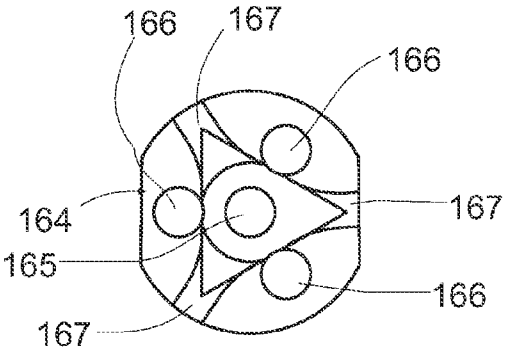

FIG. 21

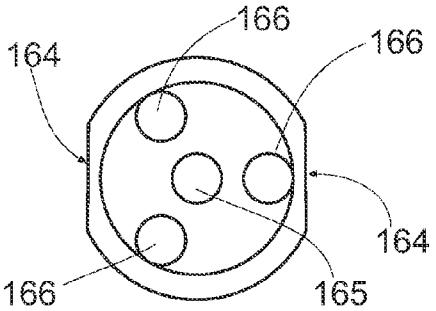

FIG. 22

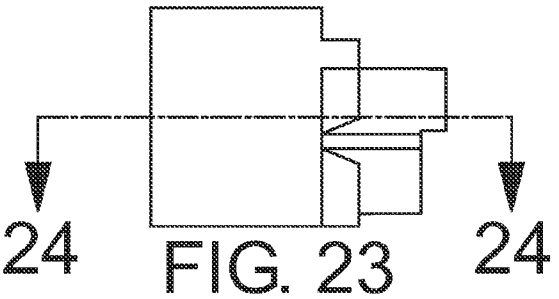

FIG. 23

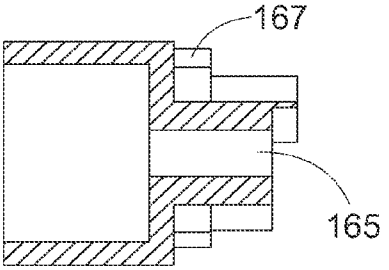

FIG. 24

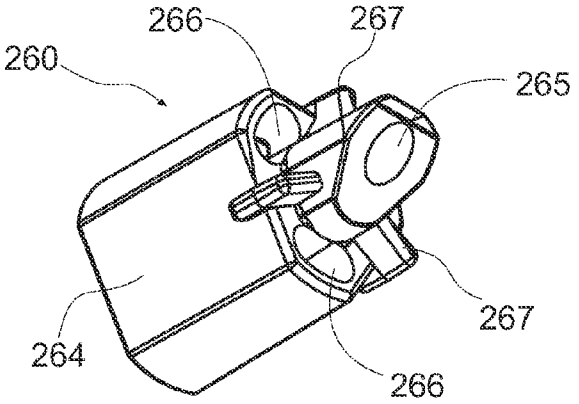

FIG. 25

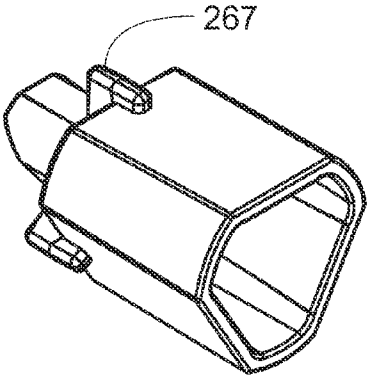

FIG. 26

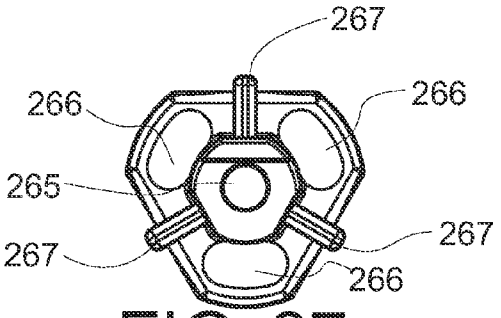

FIG. 27

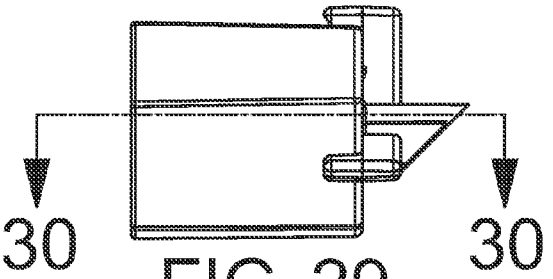

FIG. 29

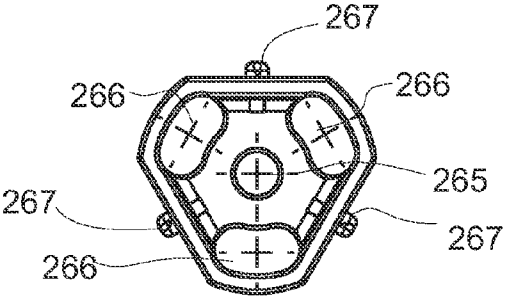

FIG. 28

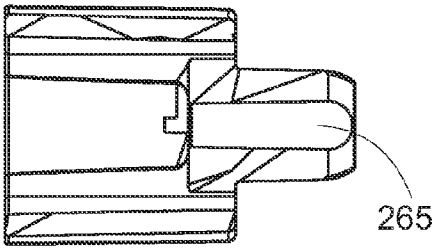

FIG. 30

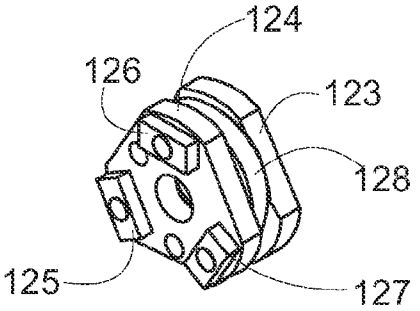

FIG. 31

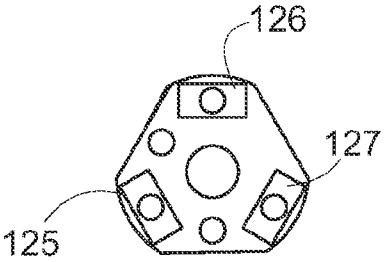

FIG. 32

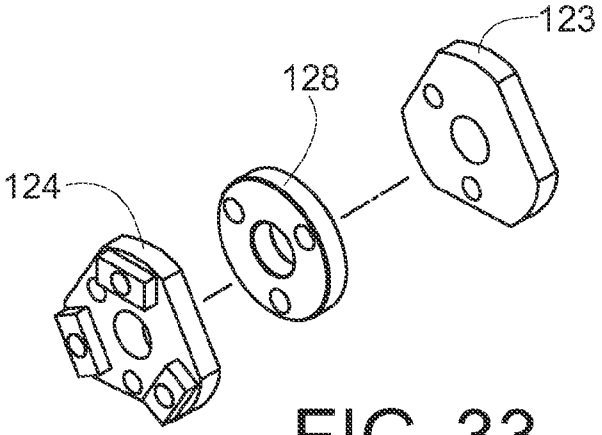

FIG. 33

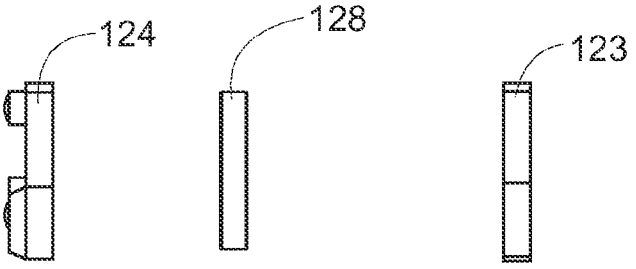

FIG. 34

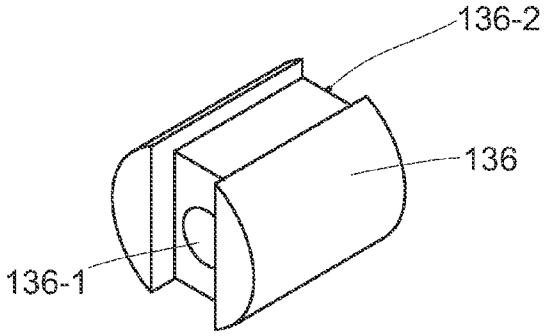

FIG. 35

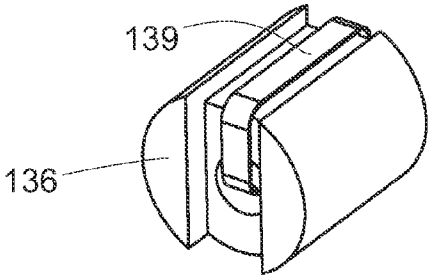

FIG. 35A

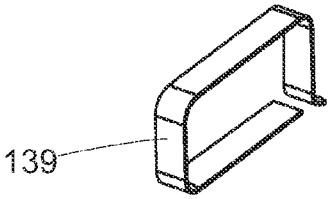

FIG. 35B

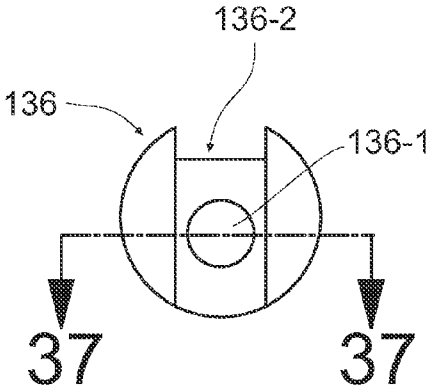

FIG. 36

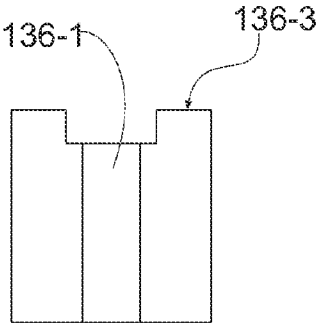

FIG. 37

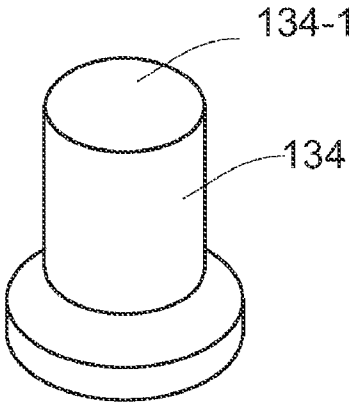

FIG. 38

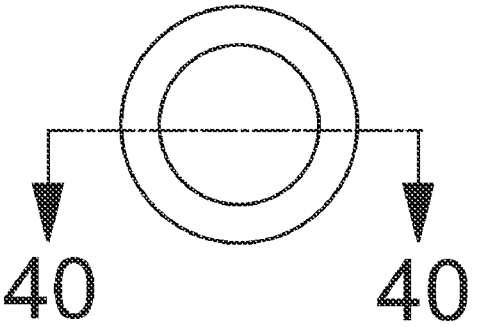

FIG. 39

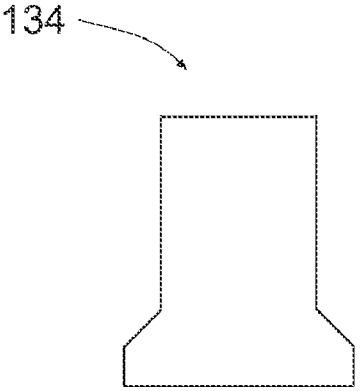

FIG. 40

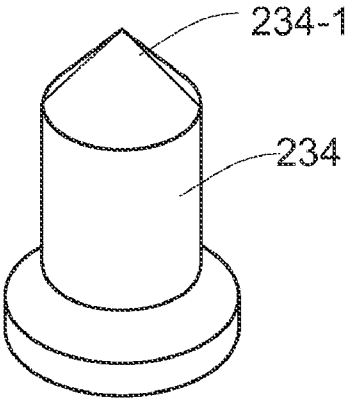

FIG. 41

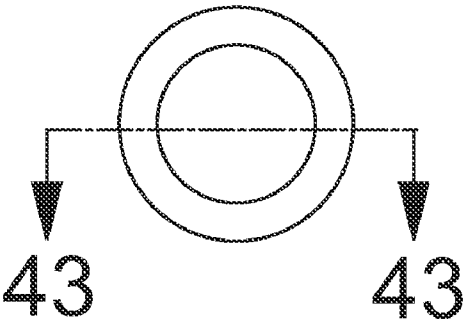

FIG. 42

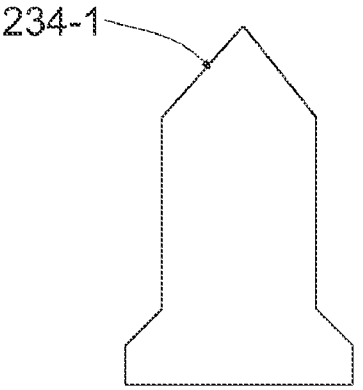

FIG. 43

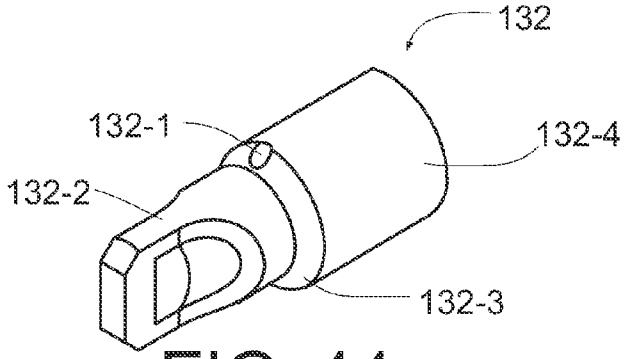

FIG. 44

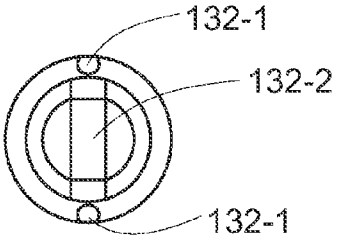

FIG. 45

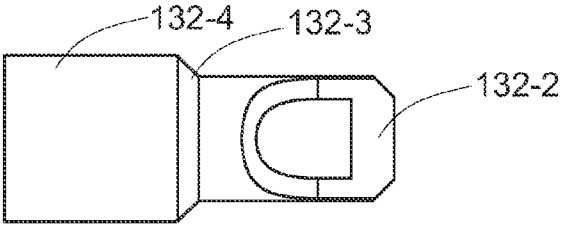

FIG. 46

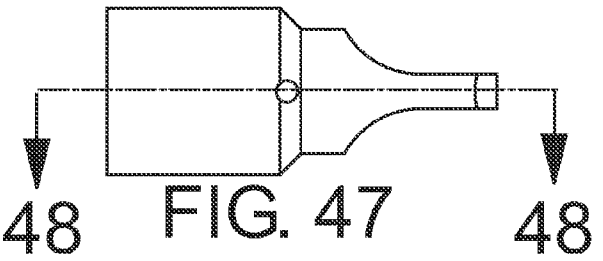

FIG. 47

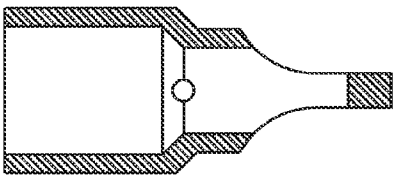

FIG. 48

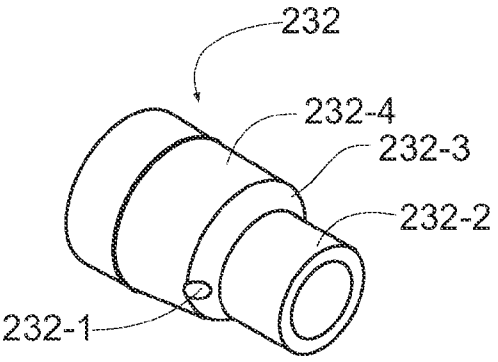

FIG. 49

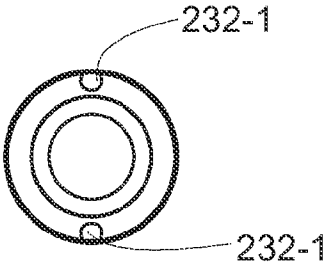

FIG. 50

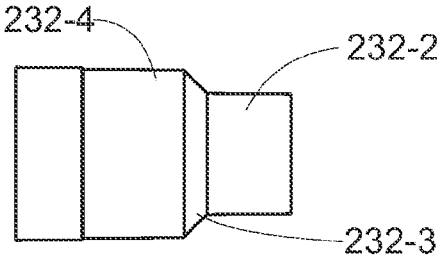

FIG. 51

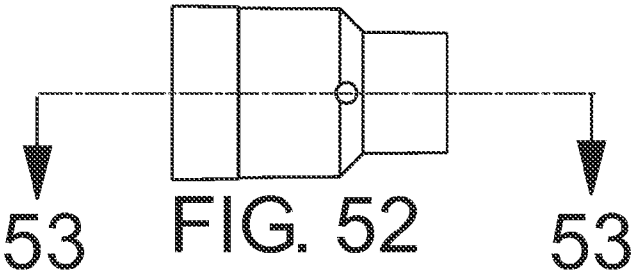

FIG. 52

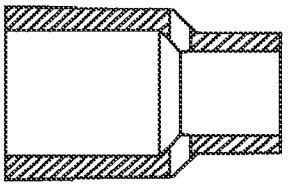

FIG. 53

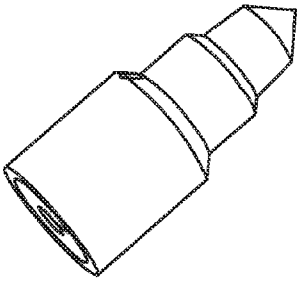

FIG. 54

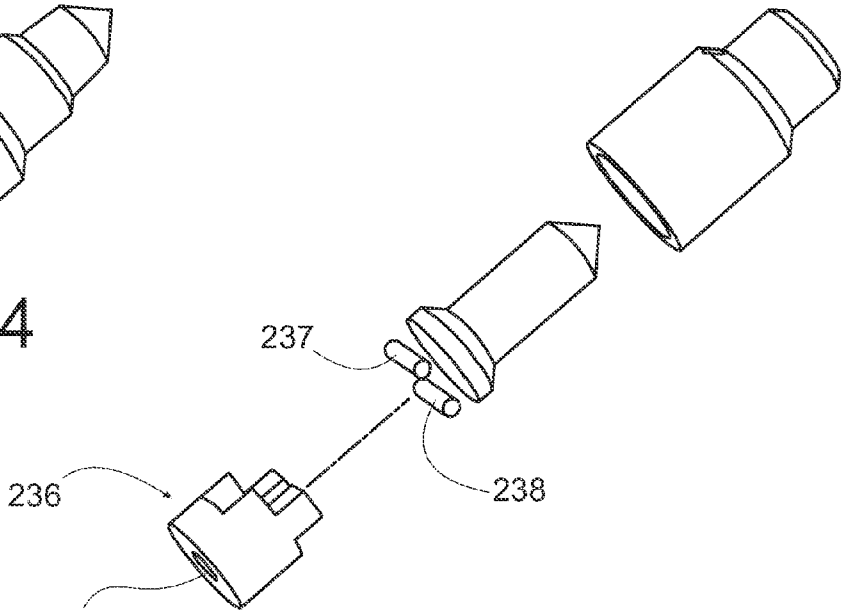

FIG. 55

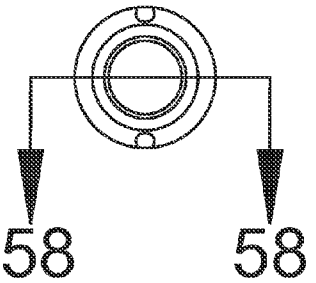

FIG. 57

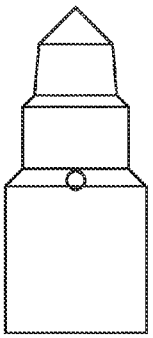

FIG. 56

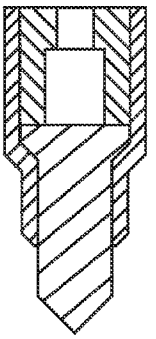

FIG. 58

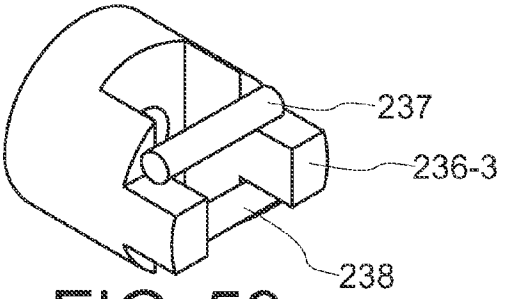

FIG. 59

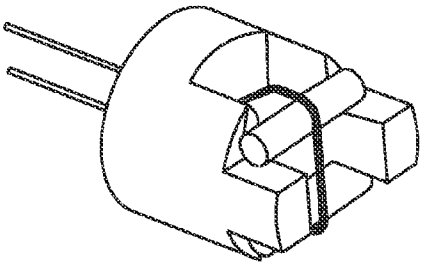

FIG. 59A

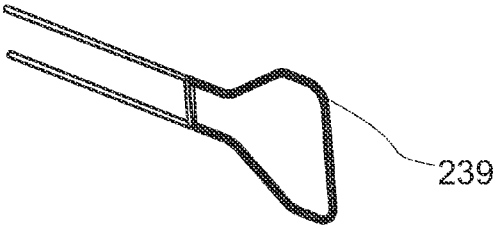

FIG. 59B

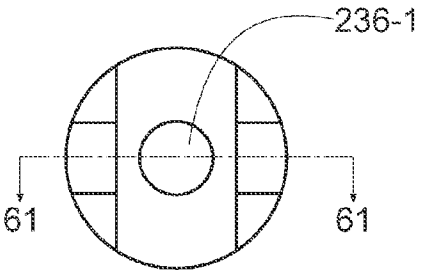

FIG. 60

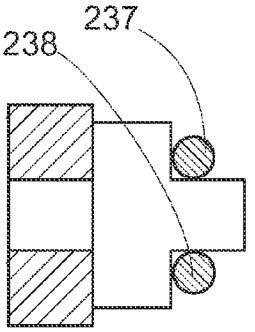

FIG. 61

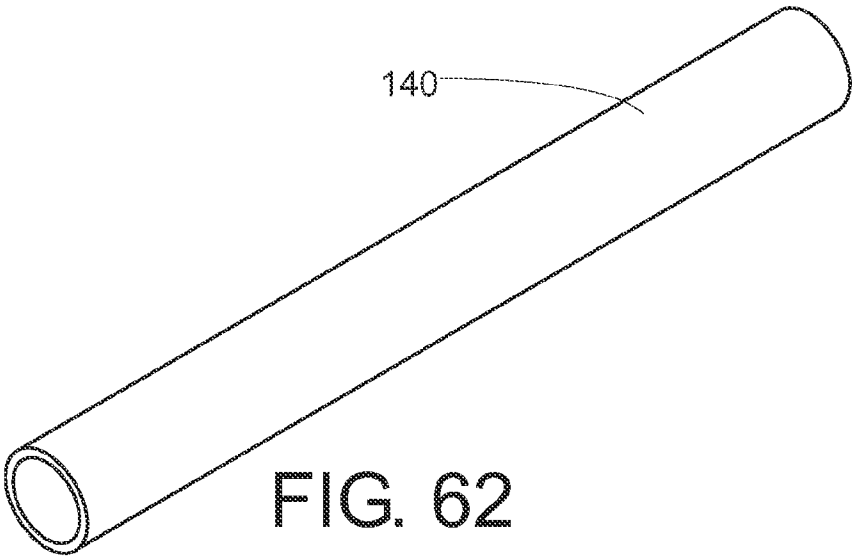

FIG. 62

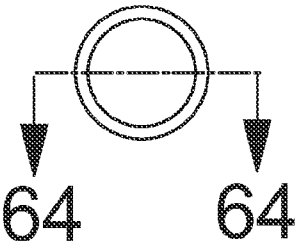

FIG. 63

FIG. 64

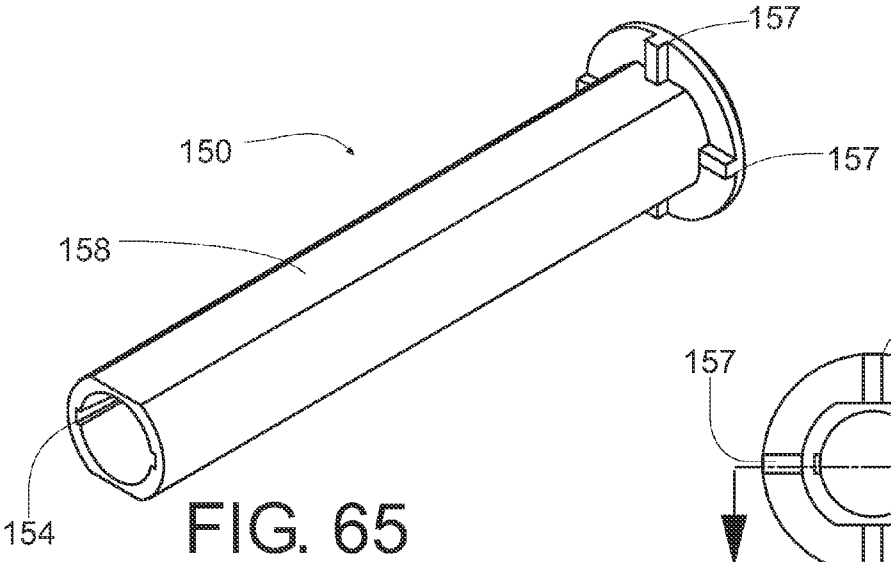

FIG. 65

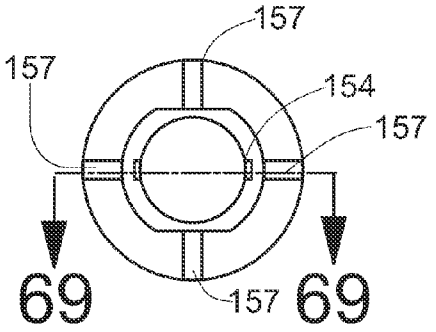

FIG. 66

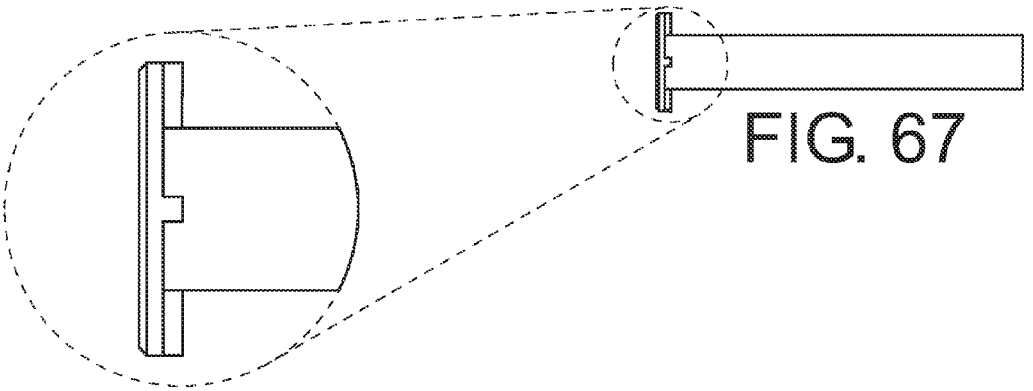

FIG. 67

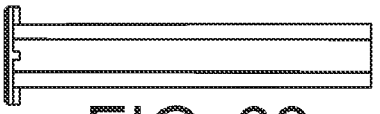

FIG. 68

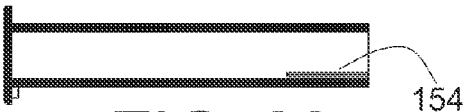

FIG. 69

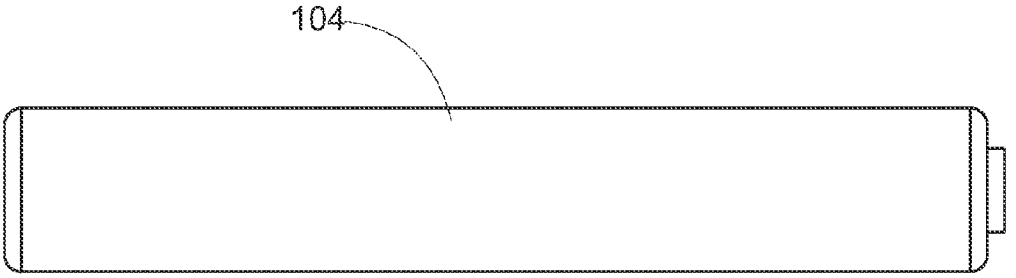

FIG. 70

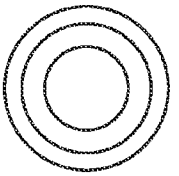

FIG. 71

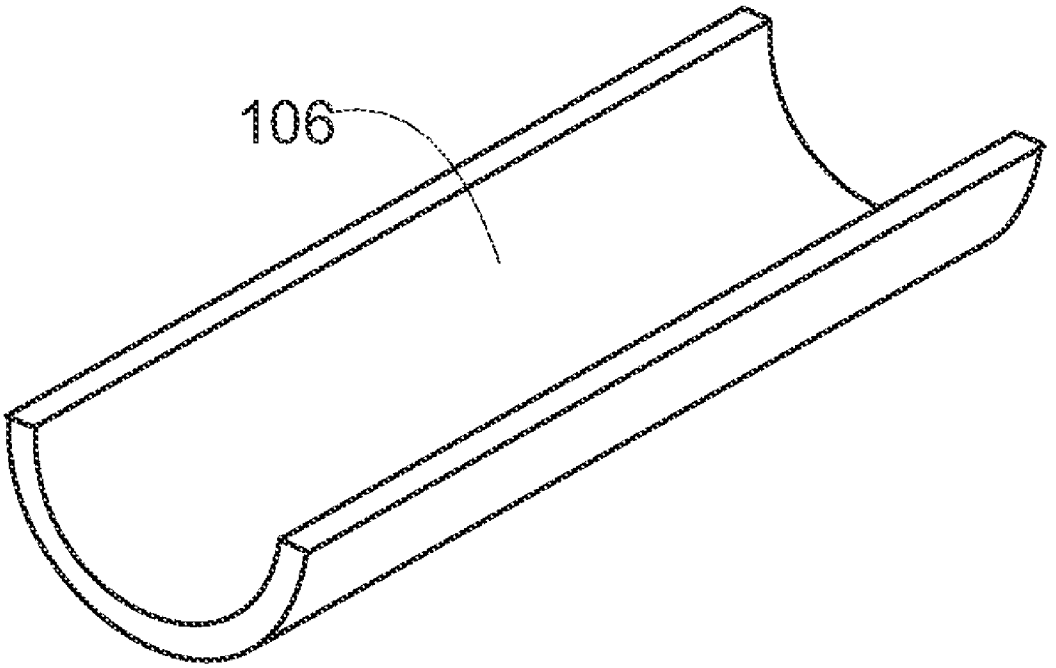

FIG. 72

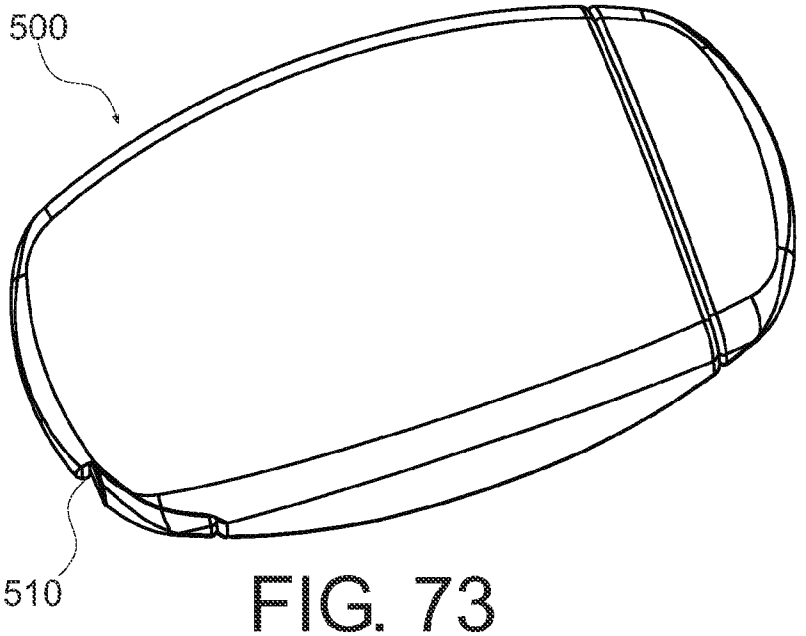

FIG. 73

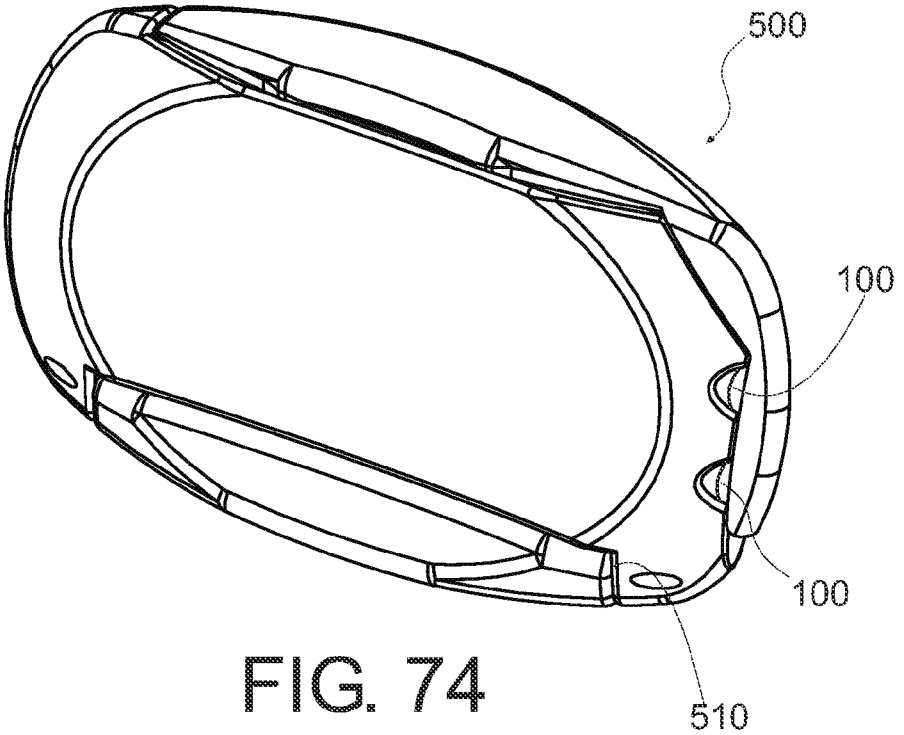

FIG. 74

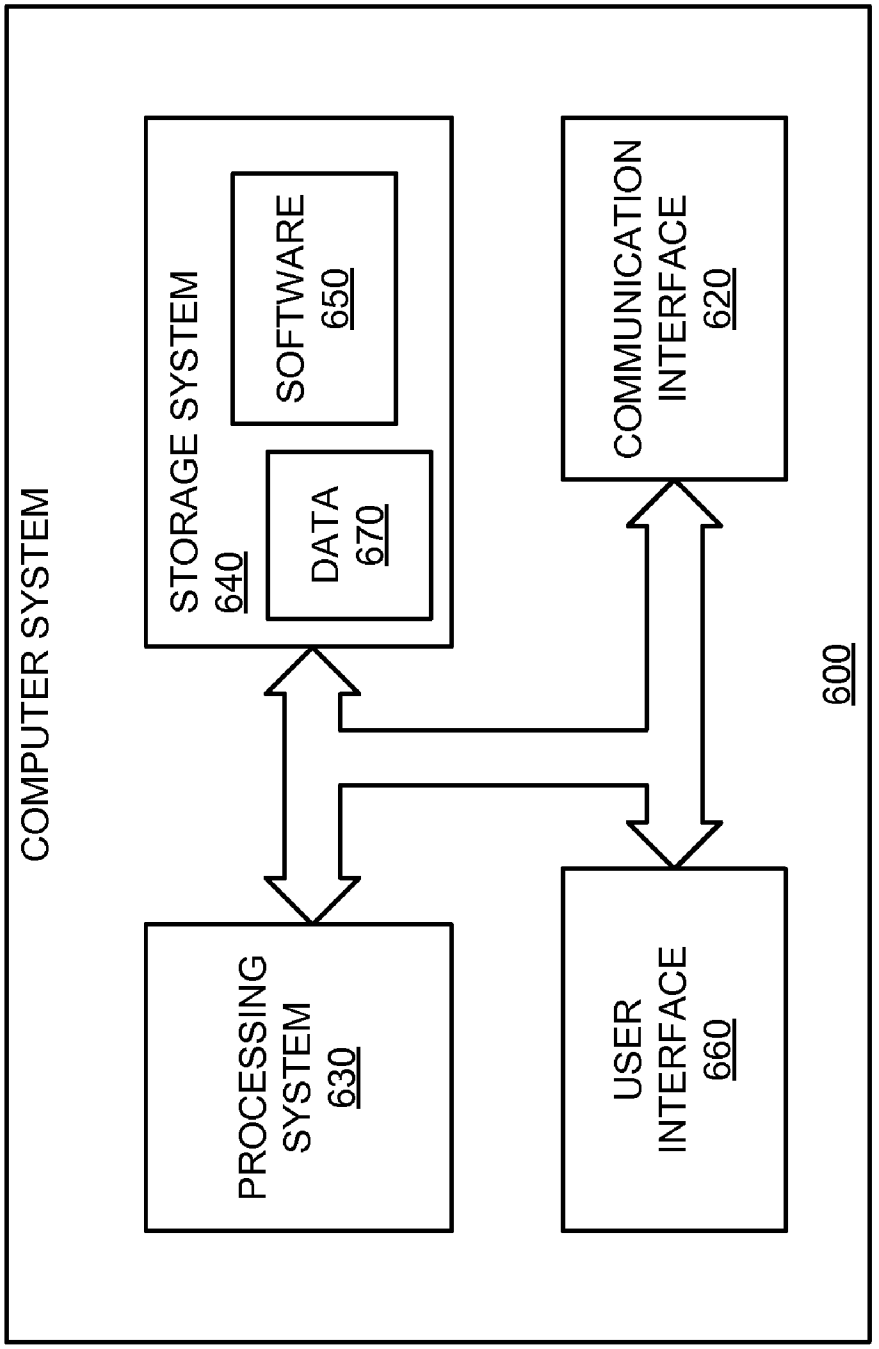
COMPUTER SYSTEM
STORAGE SYSTEM
640
SOFTWARE
650
DATA
670
COMMUNICATION
INTERFACE
620
PROCESSING
SYSTEM
630
USER
INTERFACE
660
600

FIGURE 75

CHARGING CASE FOR A PERSONAL VAPORIZING INHALER

CROSS-REFERENCE TO RELATED APPLICATIONS

This application is related to the following U.S. applications filed on or about the same day as the present application: Ser. No. 12/780,871, entitled "PERSONAL VAPORIZING INHALER WITH MOUTHPIECE COVER", Ser. No. 12/780,872, entitled "ACTIVATION TRIGGER FOR A PERSONAL VAPORIZING INHALER", Ser. No. 12/780,873, entitled "PERSONAL VAPORIZING INHALER CARTRIDGE", Ser. No. 12/780,874, entitled "ATOMIZER-VAPORIZER FOR A PERSONAL VAPORIZING INHALER", Ser. No. 12/780,875, entitled "PERSONAL VAPORIZING INHALER WITH INTERNAL LIGHT SOURCE", and, Ser. No. 12/780,876, entitled "DATA LOGGING PERSONAL VAPORIZING INHALER"; whose applications are hereby incorporated herein by reference for all purposes.

TECHNICAL FIELD

This invention relates to personal vapor inhaling units and more particularly to an active case for an electronic flameless vapor inhaler unit that may simulate a cigarette or deliver nicotine and other medications to the oral mucosa, pharyngeal mucosa, tracheal, and pulmonary membranes.

BACKGROUND

An alternative to smoked tobacco products, such as cigarettes, cigars, or pipes is a personal vaporizer. Inhaled doses of heated and atomized flavor provide a physical sensation similar to smoking. However, because a personal vaporizer is typically electrically powered, no tobacco, smoke, or combustion is usually involved in its operation. For portability, and to simulate the physical characteristics of a cigarette, cigar, or pipe, a personal vaporizer may be battery powered. In addition, a personal vaporizer may be loaded with a nicotine bearing substance and/or a medication bearing substance. The personal vaporizer may provide an inhaled dose of nicotine and/or medication by way of the heated and atomized substance. Thus, personal vaporizers may also be known as electronic cigarettes, or e-cigarettes. Personal vaporizers may be used to administer flavors, medicines, drugs, or substances that are vaporized and then inhaled.

BRIEF DESCRIPTION OF THE DRAWINGS

FIG. **1** is a perspective view of a personal vaporizer unit.

FIG. **2** is a side view of a personal vaporizer unit.

FIG. **3** is an end view of the proximal end of a personal vaporizer unit.

FIG. **4** is an end view of the distal end of a personal vaporizer unit.

FIG. **4**A is an end view of the distal end of a personal vaporizer unit having an embossed cartridge.

FIG. **5** is a figure map of FIGS. **6** and **7**.

FIG. **6** is a cross-section of the proximal portion of a personal vaporizer unit along the cut line shown in FIG. **2**.

FIG. **7** is a cross-section of the distal portion of a personal vaporizer unit along the cut line shown in FIG. **2**.

FIG. **8** is an exploded side view of components of a personal vaporizer unit.

FIG. **9** is an exploded cross-section of components of a personal vaporizer unit along the cut line shown in FIG. **2**.

FIG. **10** is a perspective view of a mouthpiece cover of a personal vaporizer unit.

FIG. **11** is a distal end view of the mouthpiece cover of FIG. **10**.

FIG. **12** is a cross-section of the mouthpiece cover along the cut line shown in FIG. **11**.

FIG. **13** is a perspective view of a mouthpiece of a personal vaporizer unit.

FIG. **14** is a side view of the mouthpiece of FIG. **13**.

FIG. **15** is a cross-section of the mouthpiece along the cut line shown in FIG. **14**.

FIG. **16** is a perspective view of a mouthpiece insulator of a personal vaporizer unit.

FIG. **17** is a distal end view of the mouthpiece insulator of FIG. **16**.

FIG. **18** is a side view of the mouthpiece insulator of FIG. **16**.

FIG. **19** is a cross-section of the mouthpiece insulator along the cut line shown in FIG. **18**.

FIG. **20** is a perspective view of a main housing of a personal vaporizer unit.

FIG. **21** is a distal end view of the main housing of FIG. **20**.

FIG. **22** is a proximal end view of the main housing of FIG. **20**.

FIG. **23** is a side view of the main housing of FIG. **20**.

FIG. **24** is a cross-section of the main housing along the cut line shown in FIG. **23**.

FIG. **25** is a perspective view of a main housing of a personal vaporizer unit.

FIG. **26** is a second perspective view of the main housing of FIG. **25**.

FIG. **27** is a distal end view of the main housing of FIG. **25**.

FIG. **28** is a proximal end view of the main housing of FIG. **25**.

FIG. **29** is a side view of the main housing of FIG. **25**.

FIG. **30** is a cross-section of the main housing along the cut line shown in FIG. **29**.

FIG. **31** is a perspective view of a printed circuit board (PCB or PC-board) assembly of a personal vaporizer unit.

FIG. **32** is a distal end view of the PCB assembly of FIG. **31**.

FIG. **33** is a perspective exploded view of the PCB assembly of FIG. **31**.

FIG. **34** is a side exploded view of the PCB assembly of FIG. **31**.

FIG. **35** is a perspective view of a proximal wick element of a personal vaporizer unit.

FIG. **35**A is a perspective view of a heating element disposed through a proximal wick element of a personal vaporizer unit.

FIG. **35**B is a perspective view of a heating element of a personal vaporizer unit.

FIG. **36** is a distal end view of the wick element of FIG. **35**.

FIG. **37** is a cross-section of the wick element along the cut line shown in FIG. **35**.

FIG. **38** is a perspective view of a distal wick element of a personal vaporizer unit.

FIG. **39** is a distal end view of the wick element of FIG. **38**.

FIG. **40** is a cross-section of the wick element along the cut line shown in FIG. **39**.

FIG. **41** is a perspective view of a distal wick element of a personal vaporizer unit.

FIG. **42** is a distal end view of the wick element of FIG. **41**.

FIG. **43** is a cross-section of the wick element along the cut line shown in FIG. **42**.

FIG. **44** is a perspective view of an atomizer housing of a personal vaporizer unit.

FIG. **45** is a distal end view of the atomizer housing of FIG. **44**.

FIG. **46** is a side view of the atomizer housing of FIG. **44**.

FIG. **47** is a top view of the atomizer housing of FIG. **44**.

FIG. **48** is a cross-section of the atomizer housing along the cut line shown in FIG. **47**.

FIG. **49** is a perspective view of an atomizer housing of a personal vaporizer unit.

FIG. **50** is a distal end view of the atomizer housing of FIG. **49**.

FIG. **51** is a side view of the atomizer housing of FIG. **49**.

FIG. **52** is a top view of the atomizer housing of FIG. **49**.

FIG. **53** is a cross-section of the atomizer housing along the cut line shown in FIG. **52**.

FIG. **54** is a perspective view of an atomizer housing and wicks of a personal vaporizer unit.

FIG. **55** is an exploded view of the atomizer housing, wire guides, and wicks of FIG. **54**.

FIG. **56** is a side view of the atomizer housing and wicks of FIG. **54**.

FIG. **57** is a distal end view of the atomizer housing and wicks of FIG. **54**.

FIG. **58** is a cross-section of the atomizer housing and wicks along the cut line shown in FIG. **57**.

FIG. **59** is a perspective view of the proximal end wick and wire guides of FIGS. **54-58**.

FIG. **59**A is a perspective view showing a heating element disposed through the proximal end wick and around the wire guides of FIGS. **54-58**.

FIG. **59**B is a perspective view of the heating element of a personal vaporizer unit.

FIG. **60** is a distal end view of the wick element of FIGS. **54-58**.

FIG. **61** is a cross-section of the wick element and wire guides along the cut line shown in FIG. **60**.

FIG. **62** is a perspective view of a light pipe sleeve of a personal vaporizer unit.

FIG. **63** is an end view of the light pipe sleeve of FIG. **62**.

FIG. **64** is a cross-section of the light pipe sleeve along the cut line shown in FIG. **63**.

FIG. **65** is a perspective view of a cartridge of a personal vaporizer unit.

FIG. **66** is a proximal end view of the cartridge of FIG. **65**.

FIG. **67** is a side view of the cartridge of FIG. **65**.

FIG. **68** is a top view of the cartridge of FIG. **65**.

FIG. **69** is a cross-section of the cartridge along the cut line shown in FIG. **66**.

FIG. **70** is a side view of a battery of a personal vaporizer unit.

FIG. **71** is an end view of the battery of FIG. **70**.

FIG. **72** is a perspective view of a battery support of a personal vaporizer unit.

FIG. **73** is a perspective view of a personal vaporizer unit case.

FIG. **74** is a perspective view of a personal vaporizer unit case.

FIG. **75** is a block diagram of a computer system.

DETAILED DESCRIPTION

In an embodiment a personal vaporizer unit comprises a mouthpiece configured for contact with the mouth of a person. At least part of this mouthpiece has an antimicrobial surface. This mouthpiece may also comprise silicone rubber, thermoplastic elastomer, organosilane, silver impregnated polymer, silver impregnated thermoplastic elastomer, and/or polymer. The mouthpiece may be removed from the personal vaporizing for washing or replacement, without using a tool. The mouthpiece may be provided in different colors. Designs or other patterns may be visible on the outside of the mouthpiece.

In an embodiment, a personal vaporizer unit comprises a first conductive surface configured to contact a first body part of a person holding the personal vaporizer unit, and a second conductive surface, conductively isolated from the first conductive surface, configured to contact a second body part of the person. When the personal vaporizer unit detects a change in conductivity between the first conductive surface and the second conductive surface, a vaporizer is activated to vaporize a substance so that the vapors may be inhaled by the person holding unit. The first body part and the second body part may be a lip or parts of a hand(s). The two conductive surfaces may also be used to charge a battery contained in the personal vaporizer unit. The two conductive surfaces may also form, or be part of, a connector that may be used to output data stored in a memory.

In an embodiment, a personal vaporizer unit comprises a chamber configured to receive a cartridge. The cartridge may hold a substance to be vaporized. The chamber may be configured at the distal end of the personal vaporizer unit. A user may inhale the vaporized substance at the proximal end of the personal vaporizer unit. At least one space between the exterior surface of the cartridge, and an interior surface of the chamber, may define a passage for air to be drawn from outside the personal vaporizer unit, near the distal end, through the personal vaporizer unit to be inhaled by the user along with the vaporized substance. The personal vaporizer unit may also include a puncturing element that breaks a seal on the cartridge to allow a substance in the cartridge to be vaporized. An end surface of the cartridge may be translucent to diffuse light produced internally to the personal vaporizer unit. The translucent end may be etched or embossed with letters, symbols, or other indicia that are illuminated by the light produced internally to the personal vaporizer unit.

In an embodiment, a personal vaporizer unit comprises a first wick element and a second wick element having a porous ceramic. The first wick element is adapted to directly contact a liquid held in a reservoir. The reservoir may be contained by a cartridge that is removable from the personal vaporizer unit. A heating element is disposed through the second wick element. An air gap is defined between the first wick element and the second wick element with the heating element exposed to the air gap. Air enters the first wick element through a hole in a housing holding the first wick element.

In an embodiment, a personal vaporizer unit comprises a light source internal to an opaque cylindrical housing that approximates the appearance of a smoking article. A cylindrical light tube is disposed inside the opaque cylindrical housing to conduct light emitted by the light source to an end of the opaque cylindrical housing. This allows the light to be visible outside of the opaque cylindrical housing of the vaporizer.

In an embodiment, a personal vaporizer unit comprises a microprocessor, memory, and a connector. The connector outputs data stored in the memory. The microprocessor may gather, and store in the memory, information including, but not limited to, the number of cycles the device has been triggered, the duration of the cycles, the number cartridges of fluid that are delivered. The microprocessor may also gather and store times and dates associated with the other information gathered and stored. The microprocessor may detect an empty cartridge by detecting a specific change in resistance between a wick and a housing that is equivalent to a "dry wick", and thus signifies an empty cartridge.

In an embodiment, a case comprises a cradle adapted to hold a personal vaporizer unit. The personal vaporizer unit has dimensions approximating a smoking article. The case includes a battery and at least two contacts. The two contacts may form an electrical contact with the personal vaporizer unit when the personal vaporizer unit is in the cradle. The two contacts may conduct charge from the battery to the personal vaporizer unit to charge the personal vaporizer unit. The case may also download and store data retrieved from the personnel vaporizing unit. The case may download and store this data via the at least two contacts. The case may send this data to a computer via wired or wireless links. The case may have more than one cradle and sets of contacts (e.g., two sets of two contacts in order to hold and charge two personal vaporizer units).

FIG. **1** is a perspective view of a personal vaporizer unit. In FIG. **1**, personal vaporizer unit **100** comprises outer main shell **102**, mouthpiece cover **114**, mouthpiece **116**, and mouthpiece insulator **112**. The mouthpiece **116** and mouthpiece cover **114** define the proximal end of personal vaporizer unit **100**. The opposite end of personal vaporizer unit **100** will be referred to as the distal end. A cartridge **150** may be inserted into the distal end of personal vaporizer unit **100**. Cartridge **150** may hold the substance to be vaporized by personal vaporizer unit **100**. The substance after vaporizing may be inhaled by a user holding the personal vaporizer unit **100**. The substance may be in the form of a liquid or gel.

FIG. **2** is a side view of a personal vaporizer unit. FIG. **2** illustrates personal vaporizer unit **100** as viewed from the side. FIG. **2** illustrates personal vaporizer unit **100** comprising outer main shell **102**, mouthpiece cover **114**, mouthpiece **116**, and mouthpiece insulator **112**. FIG. **2** also illustrates cartridge **150** inserted into the distal end of personal vaporizer unit **100**.

FIG. **3** is an end view of the proximal end of a personal vaporizer unit. FIG. **3** shows the proximal end view of personal vaporizer unit **100** comprising mouthpiece cover **114**. FIG. **4** is an end view of the distal end of a personal vaporizer unit. FIG. **4** shows the distal end view personal vaporizer unit **100** comprising the visible portion of cartridge **150**. FIG. **4**A is an alternative end view of personal vaporizer unit **100** comprising a visible portion of cartridge **150** that has visible logos, letters, or other symbols. These visible logos, letters, or other symbols may be illuminated or backlit by a light source internal to the personal vaporizer unit **100**. The light source may be activated intermittently under the control of a microprocessor or other electronics internal to personal vaporizer unit **100**. The light source may be activated in such a manner as to simulate the glowing ash of a cigar or cigarette.

FIG. **5** is a figure map of FIGS. **6** and **7**. FIG. **6** is a cross-section of the proximal portion of a personal vaporizer unit along the cut line shown in FIG. **2**. In FIG. **6**, the proximal portion of personal vaporizer unit **100** comprises mouthpiece cover **114**, mouthpiece **116**, mouthpiece insulator **112**, outer main shell **102**, battery support **106**, and battery **104**. The mouthpiece cover **114** surrounds and is engaged with the distal end of mouthpiece **116**. Mouthpiece **116** and outer main shell **102** are preferably made of an electrically conductive material(s). Mouthpiece **116** is separated from outer main shell **102** by mouthpiece insulator **112**. Mouthpiece **116** and outer main shell **102** are thus electrically isolated from each other by mouthpiece insulator **112**.

In an embodiment, personal vaporizer unit **100** is configured such that other main shell **102** comprises a first conductive surface configured to contact a first body part of a person holding personal vaporizer unit **100**. Mouthpiece **116** comprises a second conductive surface, which is conductively isolated from the first conductive surface. This second conductive surface is configured to contact a second body part of the person. When personal vaporizer unit **100** detects a change in conductivity between the first conductive surface and the second conductive surface, a vaporizer internal to personal vaporizer unit **100** is activated to vaporize a substance in cartridge **150** so that the vapors may be inhaled by the person holding personal vaporizer unit **100**. The first body part and the second body part may be a lip or parts of a hand(s). The two conductive surfaces of outer main shell **102** and mouthpiece **116**, respectively, may also be used to charge battery **104** contained in the personal vaporizer unit **100**. The two conductive surfaces of outer main shell **102** and mouthpiece **116**, respectively, may also be used to output (or input) data stored (or to be stored) in a memory (not shown).

Battery support **106** functions to hold battery **104** in a position which is fixed relative to our main shell **102**. Battery support **106** is also configured to allow air and vaporized substance to pass from the distal end of personal vaporizer unit **100** past battery **104** along one or more passageways. After air and the vapors of the vaporized substance pass by battery **104**, they may pass through openings in mouthpiece **116**, mouthpiece cover **114**, and mouthpiece insulator **112**, to be inhaled by a user.

FIG. **7** is a cross-section of the distal portion of a personal vaporizer unit along the cut line shown in FIG. **2**. In FIG. **7**, the distal end portion of personal vaporizer unit **100** comprises outer main shell **102**, light pipe sleeve **140**, and atomizer housing **132**, distal wick **134**, proximal wick **136**, PC board **123**, PC board **124**, spacer **128**, and main housing **160**. FIG. **7** also illustrates cartridge **150** inserted into the distal end of personal vaporizer unit **100**. As can be seen in FIG. **7**, cartridge **150** may hold a substance (e.g., a liquid or gel) in direct contact with distal wick **134**. The substance may be drawn through distal wick **134** to be vaporized inside atomizer assembly. The atomizer assembly comprises atomizer housing **132**, distal wick **134**, proximal wick **136**, and a heating element (not shown).

FIG. **8** is an exploded side view of components of a personal vaporizer unit. FIG. **9** is an exploded cross-section of components of a personal vaporizer unit along the cut line shown in FIG. **2**.

In FIGS. **8** and **9**, personal vaporizer unit **100** comprises (from left to right) mouthpiece cover **114**, mouthpiece **116**, mouthpiece insulator **112**, battery **104**, battery support **106**, PC board **123**, spacer **128**, PC board **124**, main housing **160**, proximal wick **136**, distal wick **134**, atomizer housing **132**, light pipe sleeve **140**, and cartridge **150**. Mouthpiece cover **114** surrounds and covers the proximal end of mouthpiece **116**. The distal end of mouthpiece **116** is inserted into mouthpiece insulator **112**. Battery **104** is held in place by battery support **106**. PC board **123**, spacer **128** and PC board **124** are disposed within main housing **160**. Proximal wick **136** and distal wick **134** are disposed within atomizer housing **132**.

Atomizer housing **132** (and therefore proximal wick **136**, distal wick **134**) are disposed inside light pipe sleeve **140** and main shell **102**. (Note: for clarity, main shell **102** is not shown in FIGS. **8** and **9**.) Light pipe sleeve **140** is disposed within main shell **102**. Light pipe sleeve **140** is positioned such that light emitted from a light source mounted on PC board **124** may be conducted via light pipe sleeve **140** to a location where it is visible on the outside of personal vaporizer unit **100**.

Cartridge **150** is disposed within light pipe sleeve **140**. When assembled, a substance contained within cartridge **150** is held in direct contact with distal wick **134**. When cartridge **150** is inserted into personal vaporizer unit **100** atomizer housing **132** or distal wick **134** may puncture a seal or cap that

contains the substance to be vaporized within cartridge **150**. Once punctured, the substance held within a reservoir of cartridge **150** may come in direct contact with distal wick **134**.

FIG. **10** is a perspective view of a mouthpiece cover of a personal vaporizer unit. FIG. **11** is a distal end view of the mouthpiece cover of FIG. **10**. FIG. **12** is a cross-section of the mouthpiece cover along the cut line shown in FIG. **11**. As can be seen in FIGS. **10-12**, mouthpiece cover **114** has an opening **114-1** that allows air and the vaporized substance to be drawn through mouthpiece cover **114**. Mouthpiece cover **114** is configured for contact with the mouth of a person. In an embodiment, at least part of the mouthpiece cover has an antimicrobial surface. This antimicrobial surface of mouthpiece cover **114** may comprise, but is not limited to: silicone rubber, thermoplastic elastomer, organosilane, silver impregnated polymer, silver impregnated thermoplastic elastomer, and/or polymer. Mouthpiece cover **114** is also configured to be removable from personal vaporizer unit **100** by a user without the use of tools. This allows mouthpiece cover **114** to be replaced and/or washed. In an embodiment, mouthpiece cover **114** may be held in place on personal vaporizer unit **100** by annular ridge **114-2** which interfaces with a groove on mouthpiece **116** of personal vaporizer unit **100** to secure mouthpiece cover **114** in place. In another embodiment, mouthpiece cover **114** may be held in place on personal vaporizer unit **100** by a friction fit.

FIG. **13** is a perspective view of a mouthpiece of a personal vaporizer unit. FIG. **14** is a side view of the mouthpiece of FIG. **13**. FIG. **15** is a cross-section of the mouthpiece along the cut line shown in FIG. **14**. As can be seen in FIGS. **13-15**, mouthpiece **116** has a passageway **116-1** that allows air and the vaporized substance to be drawn through mouthpiece **116**. Mouthpiece **116** may comprise a conductive surface or material configured to contact a first body part of a person holding personal vaporizer unit **100**. This first body part may be part of a hand, or at least one lip of the person holding personal vaporizer unit **100**. In an embodiment, mouthpiece **116** has an annular groove **116-2** around an outside surface. This groove is configured to receive annular ridge **114-2**. Thus, annular groove **116-2** helps secure mouthpiece cover **114** to personal vaporizer unit **100**.

FIG. **16** is a perspective view of a mouthpiece insulator of a personal vaporizer unit. FIG. **17** is a distal end view of the mouthpiece insulator of FIG. **16**. FIG. **18** is a side view of the mouthpiece insulator of FIG. **16**. FIG. **19** is a cross-section of the mouthpiece insulator along the cut line shown in FIG. **18**. As discussed previously, mouthpiece insulator **112** is disposed between main shell **102** and mouthpiece **116**. As can be seen in FIGS. **16-18**, mouthpiece insulator **112** has a passageway **112-1** that allows air and the vaporized substance to be drawn through mouthpiece insulator **112**. Because mouthpiece insulator **112** is disposed between main shell **102** and mouthpiece **116**, mouthpiece insulator **112** can electrically isolate main shell **102** and mouthpiece **116**. Thus, in an embodiment, mouthpiece insulator **112** comprises, or is made of, a non-electrically conductive material. This electrical isolation between main shell **102** and mouthpiece **116** allow electrical impedance changes between main shell **102** and mouthpiece **116** to be detected.

For example, a first conductive surface on mouthpiece **116** may be configured to contact a first body part of a person holding personal vaporizer unit **100**. A second conductive surface on main shell **102** (which is conductively isolated from said first conductive surface by mouthpiece insulator **112**) may be configured to contact a second body part of the person. Personal vaporizer unit **100** may then activate in response to detecting a change in conductivity between the first conductive surface and the second conductive surface. In an embodiment, this change in conductivity may comprise a drop in impedance between the first conductive surface and the second conductive surface. In an embodiment, the change in conductivity may comprise a change in capacitance between the first conductive surface and the second conductive surface. The first body part may be a finger. The second body part may be a lip. The second body part may be a second finger. In an embodiment, the first conductive surface and the second conductive surfaces may be used to pass a charging current to battery **104**. The first and second conductive surfaces may also be used to transfer data to or from personal vaporizer unit **100**.

FIG. **20** is a perspective view of a main housing of a personal vaporizer unit. FIG. **21** is a distal end view of the main housing of FIG. **20**. FIG. **22** is a proximal end view of the main housing of FIG. **20**. FIG. **23** is a side view of the main housing of FIG. **20**. FIG. **24** is a cross-section of the main housing along the cut line shown in FIG. **23**. Main housing **160** is configured to hold PC-boards **123** and **124**, and spacer **128**. Main housing **160** is configured to fit within main shell **102** via a friction fit. Main housing **160** has several holes **166** that allow light generated by a light source(s) on PC-board **124** to pass. Once this light passes through holes **166**, it may be coupled into light pipe sleeve **140** where it is conducted to a visible location on the outside of personal vaporizer unit **100**.

Main housing **160** also has a hole **165** that allows an electrical conductor (not shown) to run from PC-board **123** or PC-board **124** through main housing **160**. This electrical conductor may be, or connect to, a heating element (not shown). This heating element may help vaporize the substance to be inhaled by the user of personal vaporizer unit **100**. This heating element may be controlled by circuitry on PC-board **123** or PC-board **124**. This heating element may be activated in response to a change in conductivity between the first conductive surface and the second conductive surface, described previously.

The exterior of main housing **160** may also have a flat surface **164** (or other geometry) forming a galley that is configured to allow the vaporized substance and air to pass between the main housing **160** and the main shell **102**. Once the vaporized substance and air pass by main housing **160**, they may travel through passageway **112-1**, passageway **116-1**, and opening **114-1** to be inhaled by a user of personal vaporizer unit **100**. The exterior of main housing **160** may also have one or more standoffs **167** (or other geometries) that are configured to allow air and the vaporized substance to reach the passageway formed by flat surface **164** and main shell **102**.

FIG. **25** is a perspective view of a main housing of a personal vaporizer unit. FIG. **26** is a second perspective view of the main housing of FIG. **25**. FIG. **27** is a distal end view of the main housing of FIG. **25**. FIG. **28** is a proximal end view of the main housing of FIG. **25**. FIG. **29** is a side view of the main housing of FIG. **25**. FIG. **30** is a cross-section of the main housing along the cut line shown in FIG. **29**. Main housing **260** may be used as an alternative embodiment to main housing **160**.

Main housing **260** is configured to hold PC-boards **123** and **124**, and spacer **128**. Main housing **260** is configured to fit within main shell **102** via a friction fit. Main housing **260** has several holes **266** that allow light generated by a light source (s) on PC-board **124** to pass. Once this light passes through

holes **266**, it may be coupled into light pipe sleeve **140** where it is conducted to a visible location on the outside of personal vaporizer unit **100**.

Main housing **260** also has a hole **265** that allows an electrical conductor (not shown) to run from PC-board **123** or PC-board **124** through main housing **260**. This electrical conductor may be, or connect to, a heating element (not shown). This heating element may help vaporize the substance to be inhaled by the user of personal vaporizer unit **100**. This heating element may be controlled by circuitry on PC-board **123** or PC-board **124**. This heating element may be activated in response to a change in conductivity between the first conductive surface and the second conductive surface, described previously.

The exterior of main housing **260** may also have flat surfaces **264** (or other geometry) that form a galley that is configured to allow the vaporized substance and air to pass between the main housing **260** and the main shell **102**. Once the vaporized substance and air pass by main housing **260**, they may travel through passageway **112-1**, passageway **116-1**, and opening **114-1** to be inhaled by a user of personal vaporizer unit **100**. The exterior of main housing **260** may also have one or more standoffs **267** (or other geometries) that are configured to allow air and the vaporized substance to reach the passageway formed by flat surfaces **264** and main shell **102**.

FIG. **31** is a perspective view of a printed circuit board assembly of a personal vaporizer unit. FIG. **32** is a distal end view of the PCB assembly of FIG. **31**. FIG. **33** is a perspective exploded view of the PCB assembly of FIG. **31**. FIG. **34** is a side exploded view of the PCB assembly of FIG. **31**. As can be seen in FIGS. **31-34**, the PCB assembly is comprised of PC-board **123** and PC-board **124** separated by a spacer **128**. PC-board **124** may have mounted upon it light emitting diodes (LEDs) **125-127** or other light sources. LEDs **125-127** are configured and positioned such that when they produce light, that light passes through holes **166** or **266** in main housings **160** and **260**, respectively. This light may then be conducted by light pipe sleeve **140** to a location where it will be visible exterior to personal vaporizer unit **100**.

PC-board **123** may have mounted on it a microprocessor, memory, or other circuitry (not shown) to activate or otherwise control personal vaporizer unit **100**. This microprocessor may store data about the operation of personal vaporizer unit **100** in the memory. For example, the microprocessor may determine and store the number of cycles personal vaporizer unit **100** has been triggered. The microprocessor may also store a time and/or date associated with one or more of these cycles. The microprocessor may cause this data to be output via a connector. The connector may be comprised of the first and second conductive surfaces of mouthpiece **116** and/or main shell **102**.

In an embodiment, the microprocessor may determine a duration associated with various cycles where personal vaporizer unit **100** has been triggered. These durations (or a number based on these duration, such as an average) may be stored in the memory. The microprocessor may cause these numbers to be output via the connector. The microprocessor may determine an empty cartridge condition and stores a number associated with a number of times said empty cartridge condition occurs. The microprocessor, or other circuitry, may determine an empty cartridge condition determined based on a resistance between atomizer housing **132** or **232** and a wick **134**, **234**, **136**, or **236**. The microprocessor may also store a time and/or date associated with one or more of these empty cartridge conditions. The number of times an empty cartridge condition is detected, and or times and/or dates associated with these empty cartridge conditions may be output via the connector.

Battery **104**, PC-board **123**, PC-board **124**, and all electronics internal to personal vaporizer unit **100** may be sealed in a plastic or plastic and epoxy compartment within the device. This compartment may include main housing **160** or **260**. All penetrations in this compartment may be sealed. Thus, only wires will protrude from the compartment. The compartment may be filled with epoxy after the assembly of battery **104**, PC-board **123**, PC-board **124**, and LEDs **125-127**. The compartment may be ultrasonically welded closed after assembly of battery **104**, PC-board **123**, PC-board **124**, and LEDs **125-127**. This sealed compartment is configured such that all vapor within personal vaporizer unit **100** does not come in contact with the electronics on PC-boards **123** or **124**.

FIG. **35** is a perspective view of a proximal wick element of a personal vaporizer unit. FIG. **35**A is a perspective view of a heating element disposed through a proximal wick element of a personal vaporizer unit. FIG. **35**B is a perspective view of a heating element of a personal vaporizer unit. FIG. **36** is a distal end view of the wick element of FIG. **35**. FIG. **37** is a cross-section of the wick element along the cut line shown in FIG. **35**. Proximal wick **136** is configured to fit within atomizer housing **132**. As can be seen in FIGS. **35-37**, proximal wick **136** includes internal wire passageway **136-1** and external wire passageway **136-2**. These wire passageways allows a conductor or a heating element **139** to be positioned through proximal wick **136** (via internal wire passageway **136-1**). This conductor or heating element **139** may also be positioned in external wire passageway **136-2**. Thus, as shown in FIG. **35**A, a conductor or heating element **139** may be wrapped around a portion of proximal wick **136** by running the conductor or heating element **139** through internal wire passageway **136-1**, around the distal end of proximal wick **136**, and through external wire passageway **136-2** to return to approximately its point of origin. The heating element **139** may, when personal vaporizer **100** is activated, heat proximal wick **136** in order to facilitate vaporization of a substance.

FIG. **38** is a perspective view of a distal wick element of a personal vaporizer unit. FIG. **39** is a distal end view of the wick element of FIG. **38**. FIG. **40** is a cross-section of the wick element along the cut line shown in FIG. **39**. Distal wick **134** is configured to fit within atomizer housing **132**. As can be seen in FIGS. **38-40**, distal wick **134** comprises two cylinders of different diameters. A chamfered surface transitions from the smaller diameter of the distal end of distal wick **134** to a larger diameter at the proximal end of distal wick **134**. The cylinder at the distal end terminates with a flat surface end **134-1**. This flat surface end **134-1** is the end of distal wick **134** is a surface that is placed in direct contact with a substance to be vaporized when cartridge **150** is inserted into the distal end of personal vaporizer **100**. The proximal end of distal wick **134** is typically in contact with proximal wick **136**. However, at least a part of proximal wick **136** and distal wick **134** are separated by an air gap. When distal wick **134** and proximal wick **136** are used together, this air gap is formed between distal wick **134** and proximal wick **136** by stand offs **136-3** as shown in FIG. **37**.

FIG. **41** is a perspective view of a distal wick element of a personal vaporizer unit. FIG. **42** is a distal end view of the wick element of FIG. **41**. FIG. **43** is a cross-section of the wick element along the cut line shown in FIG. **42**. Proximal wick **234** may be used as an alternative embodiment to distal wick **134**. Proximal wick **234** is configured to fit within atomizer housing **232**. As can be seen in FIGS. **41-43**, proximal wick **234** comprises two cylinders of different diameters, and

a cone or pointed end **234-1**. A chamfered surface transitions from the smaller diameter of the distal end of proximal wick **234** to a larger diameter at the proximal end of proximal wick **234**. The cylinder at the distal end terminates with a pointed end **234-1**. This pointed end **234-1** is the end of proximal wick **234** that is in direct contact with a substance to be vaporized. This pointed end **234-1** may also break a seal on cartridge **150** to allow the substance to be vaporized to come in direct contact with proximal wick **234**. The proximal end of proximal wick **234** is typically in contact with proximal wick **136**. However, at least a part of proximal wick **136** and proximal wick **234** are separated by an air gap. When distal wick **134** and proximal wick **236** are used together, this air gap is formed between proximal wick **234** and proximal wick **136** by stand offs **136-3** as shown in FIG. **37**.

FIG. **44** is a perspective view of an atomizer housing of a personal vaporizer unit. FIG. **45** is a distal end view of the atomizer housing of FIG. **44**. FIG. **46** is a side view of the atomizer housing of FIG. **44**. FIG. **47** is a top view of the atomizer housing of FIG. **44**. FIG. **48** is a cross-section of the atomizer housing along the cut line shown in FIG. **47**. Atomizer housing **132** is configured to fit within main shell **102**. As can be seen in FIGS. **44-48**, atomizer housing **132** comprises roughly two cylinders of different diameters. A chamfered surface **132-3** transitions from the smaller diameter of the distal end of atomizer housing **132** to a larger diameter at the proximal end of atomizer housing **132**. The larger diameter at the proximal end of atomizer housing **132** is configured to be press fit into light pipe sleeve **140**. The cylinder at the distal end terminates with a spade shaped tip **132-2**. This spade shaped tip **132-2** may break a seal on cartridge **150** to allow the substance to be vaporized to come in direct contact with distal wick **134**. Other shaped tips are possible (e.g., needle or spear shaped).

Chamfered surface **132-3** has one or more holes **132-1**. These holes allow air to pass, via suction, through atomizer housing **132** into distal wick **134**. This suction may be supplied by the user of personal vaporizer **100** sucking or inhaling on mouthpiece cover **114** and/or mouthpiece **116**. The air that is sucked into distal wick **134** enters distal wick **134** on or near the chamfered surface between the two cylinders of distal wick **134**. The air that is sucked into distal wick **134** displaces some of the substance being vaporized that has been absorbed by distal wick **134** causing it to be atomized as it exits distal wick **134** into the air gap formed between distal wick **134** and proximal wick **136**. The heating element disposed around proximal wick **136** may then vaporize at least some of the atomized substance. In an embodiment, one or more holes **132-1** may range in diameter between 0.02 and 0.0625 inches.

In an embodiment, placing holes **132-1** at the leading edge of the chamfered surface places a set volume of the substance to be vaporized in the path of incoming air. This incoming air has nowhere to go but through the large diameter (or "head") end of the distal end wick **134**. When the air enters this area in distal end wick **134** it displaces the substance to be vaporized that is suspended in distal end wick **134** towards an air cavity between distal end wick **134** and proximal end wick **136**. When the displaced substance to be vaporized reaches the surface of distal end wick **134**, it is forced out of the wick by the incoming air and the negative pressure of the cavity. This produces an atomized cloud of the substance to be vaporized. In an embodiment, the diameter of the head of distal end wick **134** may be varied and be smaller than the diameter of the proximal end wick **136**. This allows for a tuned volume of air to bypass proximal end wick **136** and directly enter the cavity between distal wick **134** and distal wick **136** without first passing through distal wick **136**.

FIG. **49** is a perspective view of an atomizer housing of a personal vaporizer unit. FIG. **50** is a distal end view of the atomizer housing of FIG. **49**. FIG. **51** is a side view of the atomizer housing of FIG. **49**. FIG. **52** is a top view of the atomizer housing of FIG. **49**. FIG. **53** is a cross-section of the atomizer housing along the cut line shown in FIG. **52**. Atomizer housing **232** is an alternative embodiment, for use with proximal wick **234**, to atomizer house **132**. Atomizer housing **232** is configured to fit within main shell **102** and light pipe sleeve **140**. As can be seen in FIGS. **49-53**, atomizer housing **232** comprises roughly two cylinders of different diameters. A chamfered surface **232-3** transitions from the smaller diameter of the distal end of atomizer housing **232** to a larger diameter at the proximal end of atomizer housing **232**. The larger diameter at the proximal end of atomizer housing **232** is configured to be press fit into light pipe sleeve **140**. The cylinder at the distal end terminates with an open cylinder tip **232-2**. This open cylinder tip **232-2** allows the pointed end **234-1** of proximal wick **234** to break a seal on cartridge **150** to allow the substance to be vaporized to come in direct contact with proximal wick **234**.

Chamfered surface **232-3** has one or more holes **232-1**. These holes allow air to pass, via suction, through atomizer housing **232** into proximal wick **234**. The air that is sucked into proximal wick **234** enters proximal wick **234** on or near the chamfered surface between the two cylinders of proximal wick **234**. The air that is sucked into proximal wick **234** displaces some of the substance being vaporized that has been absorbed by proximal wick **234** causing it to be atomized as it exits proximal wick **234** into the air gap formed between proximal wick **234** and proximal wick **136**. The heating element disposed around proximal wick **136** may then vaporize at least some of the atomized substance being vaporized. In an embodiment, one or more holes **232-1** may range in diameter between 0.02 and 0.0625 inches.

In an embodiment, placing holes **232-1** at the leading edge of the chamfered surface places a set volume of the substance to be vaporized in the path of incoming air. This incoming air has nowhere to go but through the head of the distal end wick **234**. When the air enters this area in distal end wick **234** it displaces the substance to be vaporized that is suspended in distal end wick **234** towards an air cavity between distal end wick **234** and proximal end wick **236**. When the displaced substance to be vaporized reaches the surface of distal end wick **232**, it is forced out of the wick by the incoming air and the negative pressure of the cavity. This produces an atomized cloud of the substance to be vaporized. In an embodiment, the diameter of the head of distal end wick **234** may be varied and be smaller than the diameter of the proximal end wick **236**. This allows for a tuned volume of air to bypass distal wick **236** and directly enter the cavity between proximal wick **234** and distal wick **236** without first passing through distal wick **236**.

FIG. **54** is a perspective view of an atomizer housing and wicks of a personal vaporizer unit. FIG. **55** is an exploded view of the atomizer housing, wire guides, and wicks of FIG. **54**. FIG. **56** is a side view of the atomizer housing and wicks of FIG. **54**. FIG. **57** is a distal end view of the atomizer housing and wicks of FIG. **54**. FIG. **58** is a cross-section of the atomizer housing and wicks along the cut line shown in FIG. **57**. The atomizer housing and wicks shown in FIGS. **54-58** is an alternative embodiment for use with proximal wick **236**. The embodiment shown in FIGS. **54-58** use atomizer housing **232**, proximal wick **234**, proximal wick **236**, wire guide **237**, and wire guide **238**. Proximal wick **236** is configured to fit within atomizer housing **232**. As can be seen in FIGS. **54-58**,

proximal wick **236** includes internal wire passageway **236-1**. This wire passageway **236-1** allows a conductor or a heating element (not shown) to be positioned through proximal wick **236** (via internal wire passageway **236-1**). The conductor or heating element may be positioned around wire guide **237** and wire guide **238**. Thus, a conductor or heating element may run the through wire passageway **236-1**, around wire guides **237** and **238**, and then back through wire passageway **236-1** to return to approximately its point of origin. The heating element may, when personal vaporizer unit **100** is activated, heat proximal wick **236** in order to facilitate vaporization of a substance.

FIG. **59** is a perspective view of the proximal end wick assembly of FIGS. **54-58**. FIG. **59**A is a perspective view showing a heating element disposed through the proximal end wick and around the wire guides of FIGS. **54-58**. FIG. **59**B is a perspective view of the heating element of a personal vaporizer unit. FIG. **60** is a distal end view of the wick element and wire guides of FIGS. **54-58**. FIG. **61** is a cross-section of the wick element and wire guides along the cut line shown in FIG. **60**. As can be seen in FIG. **59**A, a conductor or heating element **239** may run through wire passageway **236-1**, around wire guides **237** and **238**, and then back through wire passageway **236-1** to return to approximately its point of origin.

In an embodiment, distal wicks **134**, **234**, and proximal wicks **136**, **236**, may be made of, or comprise, for example a porous ceramic. Distal wicks **134**, **234**, and proximal wicks **136**, **236**, may be made of, or comprise aluminum oxide, silicon carbide, magnesia partial stabilized zirconia, yttria tetragonal zirconia polycrystal, porous metal (e.g., steel, aluminum, platinum, titanium, and the like), ceramic coated porous metal, woven metal, spun metal, metal wool (e.g., steel wool), porous polymer, porous coated polymer, porous silica (i.e., glass), and/or porous Pyrex. Distal wicks **134**, **234**, and proximal wicks **136**, **236**, may be made of or comprise other materials that can absorb a substance to be vaporized.

The conductor or heating element that is disposed through proximal wick **136** or **236** may be made of, or comprise, for example: nickel chromium, iron chromium aluminum, stainless steel, gold, platinum, tungsten molybdenum, or a piezoelectric material. The conductor or heating element that is disposed through proximal wick **136** can be made of, or comprise, other materials that become heated when an electrical current is passed through them.

FIG. **62** is a perspective view of a light pipe sleeve of a personal vaporizer unit. FIG. **63** is an end view of the light pipe sleeve of FIG. **62**. FIG. **64** is a cross-section of the light pipe sleeve along the cut line shown in FIG. **63**. Light pipe sleeve **140** is configured to be disposed within main shell **102**. Light pipe sleeve **140** is also configured to hold cartridge **150** and atomizer housing **132** or **232**. As discussed previously, light pipe sleeve **140** is configured to conduct light entering the proximal end of light pipe sleeve **140** (e.g., from LEDs **125-127**) to the distal end of light pipe sleeve **140**. Typically, the light exiting the distal end of light pipe sleeve **140** will be visible from the exterior of personal vaporizer **100**. The light exiting the distal end of light pipe sleeve **140** may be diffused by cartridge **150**. The light exiting the distal end of light pipe sleeve **140** may illuminate characters and/or symbols drawn, printed, written, or embossed, etc., in an end of cartridge **150**. In an embodiment, light exiting light pipe sleeve **140** may illuminate a logo, characters and/or symbols cut through outer main shell **102**. In an embodiment, light pipe sleeve **140** is made of, or comprises, a translucent acrylic plastic.

FIG. **65** is a perspective view of a cartridge of a personal vaporizer unit. FIG. **66** is a proximal end view of the cartridge of FIG. **65**. FIG. **67** is a side view of the cartridge of FIG. **65**. FIG. **68** is a top view of the cartridge of FIG. **65**. FIG. **69** is a cross-section of the cartridge along the cut line shown in FIG. **66**. As shown in FIGS. **65-69**, cartridge **150** comprises a hollow cylinder section with at least one exterior flat surface **158**. The flat surface **158** forms, when cartridge **150** is inserted into the distal end of personal vaporizer unit **100**, an open space between the exterior surface of the cartridge and an interior surface of light pipe sleeve **140**. This space defines a passage for air to be drawn from outside personal vaporizer unit **100**, through personal vaporizer unit **100** to be inhaled by the user along with the vaporized substance. This space also helps define the volume of air drawn into personal vaporizer unit **100**. By defining the volume of air typically drawn into the unit, different mixtures of vaporized substance to air may be produced.

The hollow portion of cartridge **150** is configured as a reservoir to hold the substance to be vaporized by personal vaporizer unit **100**. The hollow portion of cartridge **150** holds the substance to be vaporized in direct contact with distal wick **134** or **234**. This allows distal wick **134** or **234** to become saturated with the substance to be vaporized. The area of distal wick **134** or **234** that is in direct contact with the substance to be vaporized may be varied in order to deliver different doses of the substance to be vaporized. For example, cartridges **150** with differing diameter hollow portions may be used to deliver different doses of the substance to be vaporized to the user.

Cartridge **150** may be configured to confine the substance to be vaporized by a cap or seal (not shown) on the proximal end. This cap or seal may be punctured by the end of atomizer housing **132**, or the pointed end **234-1** of proximal wick **234**.

When inserted into personal vaporizer unit **100**, cartridge standoffs **157** define an air passage between the end of light pipe sleeve **140** and main shell **102**. This air passage allows air to reach the air passage defined by flat surface **158**.

The hollow portion of cartridge **150** also includes one or more channels **154**. The end of these channels are exposed to air received via the air passage(s) defined by flat surface **158**. These channels allow air to enter the hollow portion of cartridge **150** as the substance contained in cartridge **150** is drawn into a distal wick **134** or **234**. Allowing air to enter the hollow portion of cartridge **150** as the substance contained in cartridge **150** is removed prevents a vacuum from forming inside cartridge **150**. This vacuum could prevent the substance contained in cartridge **150** from being absorbed into distal wick **134** or **234**.

In an embodiment, cartridge **150** may be at least partly translucent. Thus cartridge **150** may act as a light diffuser so that light emitted by one or more of LEDs **125-127** is visible external to personal vaporizer unit **100**.

FIG. **70** is a side view of a battery of a personal vaporizer unit. FIG. **71** is an end view of the battery of FIG. **70**. FIG. **72** is a perspective view of a battery support of a personal vaporizer unit. As can be seen in FIG. **72**, battery support **106** does not form a complete cylinder that completely surrounds battery **104**. This missing portion of a cylinder forms a passageway that allows air and the vaporized substance to pass by the battery from the atomizer assembly to the mouthpiece **116** so that it may be inhaled by the user.

FIG. **73** is a top perspective view of a personal vaporizer unit case. FIG. **74** is a bottom perspective view of a personal vaporizer unit case. Personal vaporizer case **500** is configured to hold one or more personal vaporizer units **100**. Personal vaporizer case **500** includes a connector **510** to interface to a computer. This connector allows case **500** to transfer data from personal vaporizer unit **100** to a computer via connecter **510**. Case **500** may also transfer data from personal vaporizer

unit **100** via a wireless interface. This wireless interface may comprise an infrared (IR) transmitter, a BLUETOOTH™ (i.e, 802.15 specified) interface, an 802.11 specified interface, and/or communicate with a cellular telephone network. Data from a personal vaporizer unit **100** may be associated with an identification number stored by personal vaporizer unit **100**. Data from personal vaporizer unit **100** may be transmitted via the wireless interface in association with the identification number.

Personal vaporizer case **500** includes a battery that may hold charge that is used to recharge a personal vaporizer unit **100**. Recharging of personal vaporizer unit **100** may be managed by a charge controller that is part of case **500**.

When case **500** is holding a personal vaporizer unit **100**, at least a portion of the personal vaporizer unit **100** is visible from the outside of case **500** to allow a light emitted by personal vaporizer unit **100** to provide a visual indication of a state of personal vaporizer unit **500**. This visual indication is visible outside of case **500**.

Personal vaporizer unit **100** is activated by a change in impedance between two conductive surfaces. In an embodiment, these two conductive surfaces are part of main shell **102** and mouthpiece **116**. These two conductive surfaces may also be used by case **500** to charge battery **104**. These two conductive surfaces may also be used by case **500** to read data out of personal vaporizer unit **100**.

In an embodiment, when a user puts personal vaporizer unit **100** in his/her mouth and provides "suction," air is drawn into personal vaporizer unit **100** though a gap between the end of main shell **102** and cartridge **150**. In an embodiment, this gap is established by standoffs **157**. Air travels down galley(s) formed by flat surface(s) **158** and the inner surface of light pipe sleeve **140**. The air then reaches a "ring" shaped galley between atomizer housing **132**, cartridge **150**, and light pipe sleeve **140**. Air travels to distal wick **134** via one or more holes **132-1**, in chamfered surface(s) **132-3**. Air travels to distal wick **234** via one or more holes **232-1**, in chamfered surface (s) **232-3**. Air is also allowed to enter cartridge **150** via one or more channels **154**. This air entering cartridge **150** via channels **154** "back fills" for the substance being vaporized which enters distal wick **134**. The substance being vaporized is held in direct contact with distal wick **134** or **234** by cartridge **150**. The substance being vaporized is absorbed by and may saturate distal wick **134** or **234** and proximal wick **136** or **236**.

The incoming air drawn through holes **132-1** displaces from saturated distal wick **134** the substance being vaporized. The displaced substance being vaporized is pulled from wick elements **134** into a cavity between distal wick **134** and **136**. This cavity may also contain a heating element that has been heated to between 150-200° C. The displaced substance being vaporized is pulled from wick elements **134** in small (e.g., atomized) droplets. These atomized droplets are vaporized by the heating element.

In an embodiment, when a user puts personal vaporizer unit **100** in his/her mouth and provides "suction," air is drawn into personal vaporizer unit **100** though a gap between the end of main shell **102** and cartridge **150**. In an embodiment, this gap is established by standoffs **157**. Air travels down galley(s) formed by flat surface(s) **158** and the inner surface of light pipe sleeve **140**. The air then reaches a "ring" shaped galley between atomizer housing **232**, cartridge **150**, and light pipe sleeve **140**. Air travels to proximal wick **234** via one or more holes **232-1**, in chamfered surface(s) **232-1**. Air is also allowed to enter cartridge **150** via one or more channels **154**. This air entering cartridge **150** via channels **154** "back fills" for the substance being vaporized which enters proximal wick **234**. The substance being vaporized is held in direct contact with proximal wick **234** by cartridge **150**. The substance being vaporized is absorbed by and may saturate distal wick **243** and proximal wick **236**.

The incoming air drawn through holes **232-1** displaces from saturated proximal wick **234** the substance being vaporized. The displaced substance being vaporized is pulled from wick elements **234** into a cavity between wick distal wick **234** and proximal wick **236**. This cavity may also contain a heating element that has been heated to between 150-200° C. The displaced substance being vaporized is pulled from distal wick **234** in small (e.g., atomized) droplets. These atomized droplets are vaporized by the heating element.

In both of the previous two embodiments, the vaporized substance and air are drawn down a galley adjacent to battery **104**, through mouthpiece insulator **112**, mouthpiece **116**, and mouthpiece cover **114**. After exiting personal vaporizer unit **100**, the vapors may be inhaled by a user.

The systems, controller, and functions described above may be implemented with or executed by one or more computer systems. The methods described above may be stored on a computer readable medium. Personal vaporizer unit **100** and case **500** may be, comprise, or include computers systems. FIG. **75** illustrates a block diagram of a computer system. Computer system **600** includes communication interface **620**, processing system **630**, storage system **640**, and user interface **660**. Processing system **630** is operatively coupled to storage system **640**. Storage system **640** stores software **650** and data **670**. Processing system **630** is operatively coupled to communication interface **620** and user interface **660**. Computer system **600** may comprise a programmed general-purpose computer. Computer system **600** may include a microprocessor. Computer system **600** may comprise programmable or special purpose circuitry. Computer system **600** may be distributed among multiple devices, processors, storage, and/or interfaces that together comprise elements **620-670**.

Communication interface **620** may comprise a network interface, modem, port, bus, link, transceiver, or other communication device. Communication interface **620** may be distributed among multiple communication devices. Processing system **630** may comprise a microprocessor, microcontroller, logic circuit, or other processing device. Processing system **630** may be distributed among multiple processing devices. User interface **660** may comprise a keyboard, mouse, voice recognition interface, microphone and speakers, graphical display, touch screen, or other type of user interface device. User interface **660** may be distributed among multiple interface devices. Storage system **640** may comprise a disk, tape, integrated circuit, RAM, ROM, network storage, server, or other memory function. Storage system **640** may be a computer readable medium. Storage system **640** may be distributed among multiple memory devices.

Processing system **630** retrieves and executes software **650** from storage system **640**. Processing system may retrieve and store data **670**. Processing system may also retrieve and store data via communication interface **620**. Processing system **650** may create or modify software **650** or data **670** to achieve a tangible result. Processing system may control communication interface **620** or user interface **670** to achieve a tangible result. Processing system may retrieve and execute remotely stored software via communication interface **620**.

Software **650** and remotely stored software may comprise an operating system, utilities, drivers, networking software, and other software typically executed by a computer system. Software **650** may comprise an application program, applet, firmware, or other form of machine-readable processing instructions typically executed by a computer system. When

executed by processing system **630**, software **650** or remotely stored software may direct computer system **600** to operate as described herein.

The above description and associated figures teach the best mode of the invention. The following claims specify the scope of the invention. Note that some aspects of the best mode may not fall within the scope of the invention as specified by the claims. Those skilled in the art will appreciate that the features described above can be combined in various ways to form multiple variations of the invention. As a result, the invention is not limited to the specific embodiments described above, but only by the following claims and their equivalents.

What is claimed is:

1. A case, comprising:

a first cradle adapted to hold a personal vaporizing unit, said personal vaporizing unit having dimensions approximating a smoking article;

a battery;

a first contact and a second contact, said first contact and said second contact forming an electrical contact with said personal vaporizing unit when said personal vaporizing unit is held by said first cradle, said first contact and said second contact conducting charge from said battery to said personal vaporizing unit to charge said personal vaporizing unit.

2. The case of claim **1**, further comprising:

a light source visible on the exterior of the case to indicate a charge level of said battery.

3. The case of claim **1**, further comprising:

a connector to interface to a computer, the case transferring data from said personal vaporizing unit to said computer via said connecter.

4. The case of claim **3**, wherein said connecter also conducts charge to recharge said battery.

5. The case of claim **1**, wherein at least a portion of personal vaporizing unit is visible from the outside of said case to allow a light source comprising said personal vaporizing unit to indicate a state of said personal vaporizing unit outside of said case.

6. The case of claim **1**, further comprising a second cradle.

7. The case of claim **1**, further comprising a charge controller to control charge conducted from said battery to said personal vaporizing unit.

8. The case of claim **1**, further comprising:

a wireless interface, the case transferring data from said personal vaporizing unit to a computer via said wireless interface.

9. The case of claim **8**, wherein said wireless interface comprises an infrared (IR) transmitter.

10. The case of claim **8**, wherein said wireless interface comprises an 802.15 specified interface.

11. The case of claim **8**, wherein said wireless interface comprises an 802.11 specified interface.

12. The case of claim **8**, wherein said wireless interface communicates with a cellular telephone network.

13. The case of claim **8**, wherein said data from said personal vaporizing unit is associated with an identification number stored by said personal vaporizing unit.

14. The case of claim **13**, wherein said data from said personal vaporizing unit is transmitted via said wireless interface in association with said identification number stored by said personal vaporizing unit.

* * * * *