US 20100129068A1

(19) United States

(12) Patent Application Publication

Binda et al.

(10) Pub. No.: US 2010/0129068 A1

(43) Pub. Date: May 27, 2010

(54) **DEVICE AND METHOD FOR DETECTING THE ORIENTATION OF AN ELECTRONIC APPARATUS**

(75) Inventors: **Ivo Binda**, Voghera (IT); **Michele Tronconi**, San Martino Siccomario (IT)

Correspondence Address:
SEED INTELLECTUAL PROPERTY LAW GROUP PLLC
701 FIFTH AVENUE, SUITE 5400
SEATTLE, WA 98104-7092 (US)

(73) Assignee: **STMICROELECTRONICS S.R.L.**, Agrate Brianza (IT)

(21) Appl. No.: **12/624,203**

(22) Filed: **Nov. 23, 2009**

(30) **Foreign Application Priority Data**

Nov. 24, 2008 (IT) TO2008A000865

Publication Classification

(51) **Int. Cl.**
G03B 17/00 (2006.01)

(52) **U.S. Cl.** **396/50**

(57) **ABSTRACT**

A device for detecting orientation includes: an inertial device, having a plurality of independent detection axes and configured to supply inertial signals indicating effects of the force of gravity according to respective detection axes; and a processing unit for configured to process the inertial signals. The processing unit includes an interrupt-generator module having a threshold-comparison stage, for configured to compare the inertial signals with respective thresholds, and a logic module, coupled to the threshold-comparison stage and configured to generate an interrupt signal on an interrupt terminal accessible from outside in response to the permanence of at least one of the inertial signals below the respective threshold for a time interval.

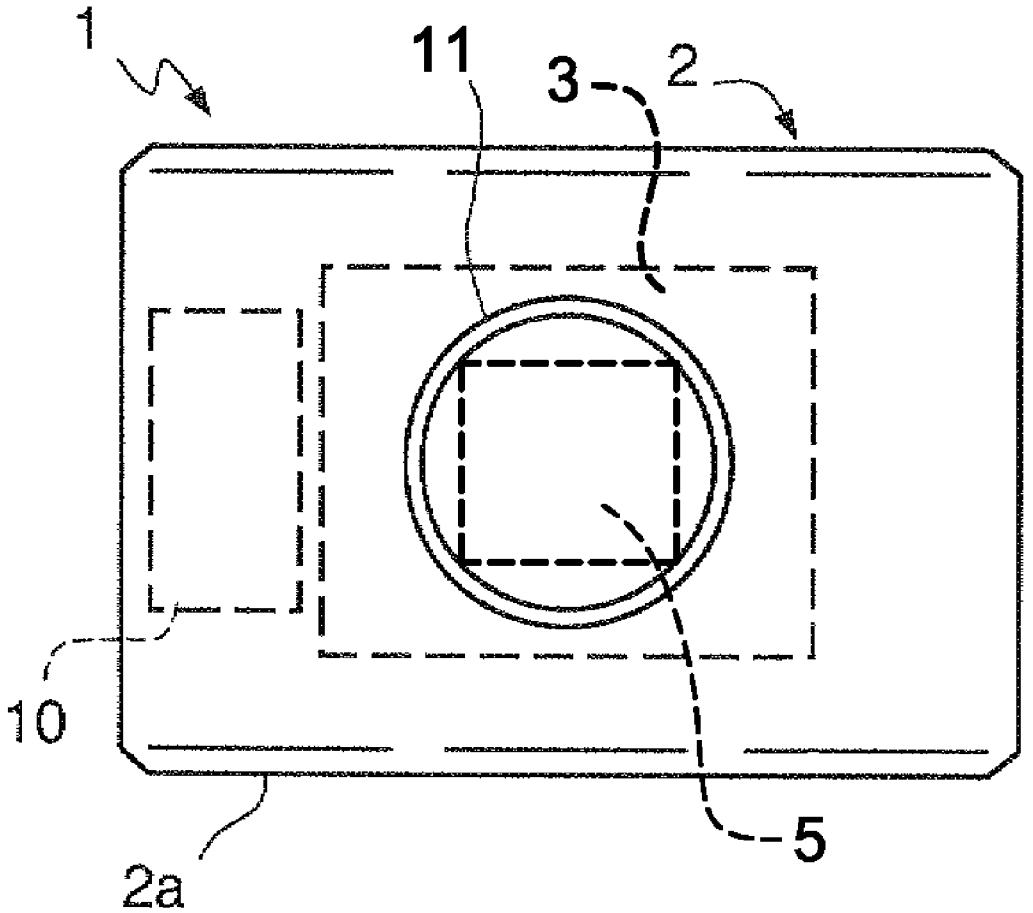

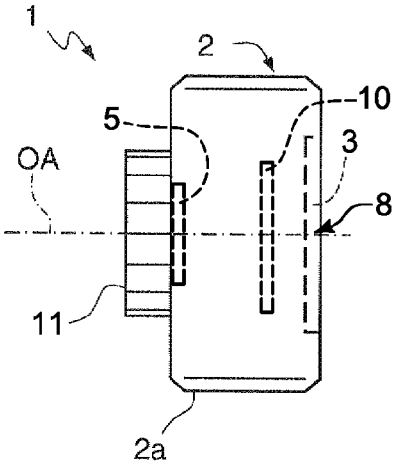

Fig.1

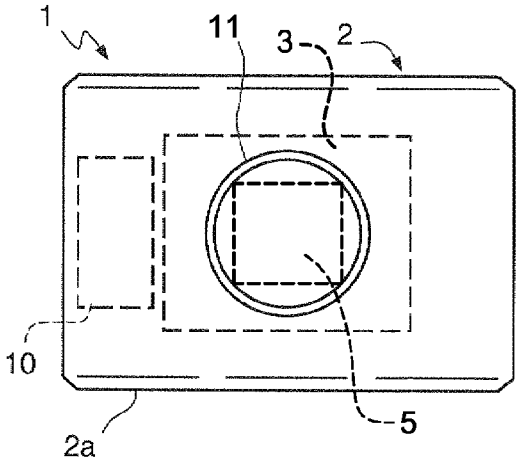

Fig.2

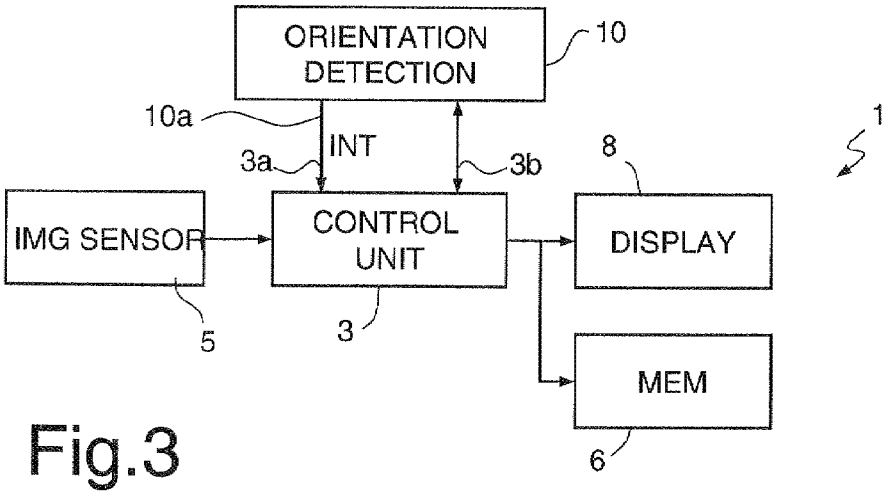

Fig.3

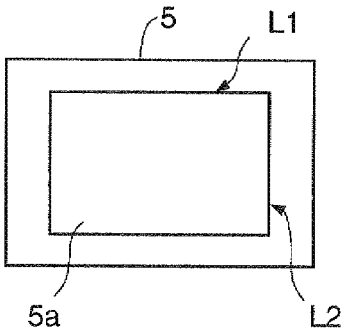

Fig.4a

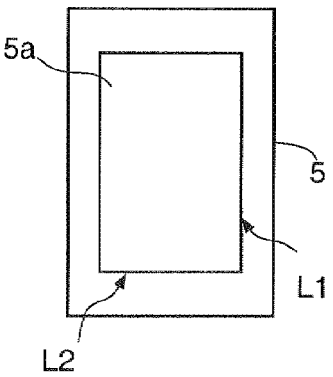

Fig.4b

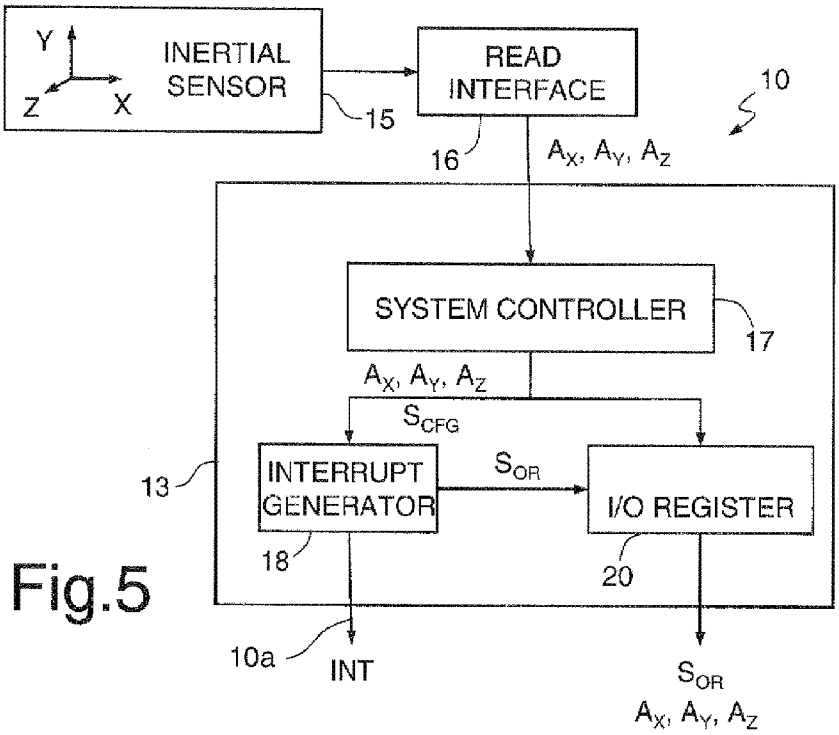
Y
Z
X
INERTIAL SENSOR
15
READ INTERFACE
16
10
A_X, A_Y, A_Z
SYSTEM CONTROLLER
17
A_X, A_Y, A_Z
S_{CFG}
13
INTERRUPT GENERATOR
S_{OR}
I/O REGISTER
18
20
10a
INT
S_{OR}
A_X, A_Y, A_Z

Fig.5

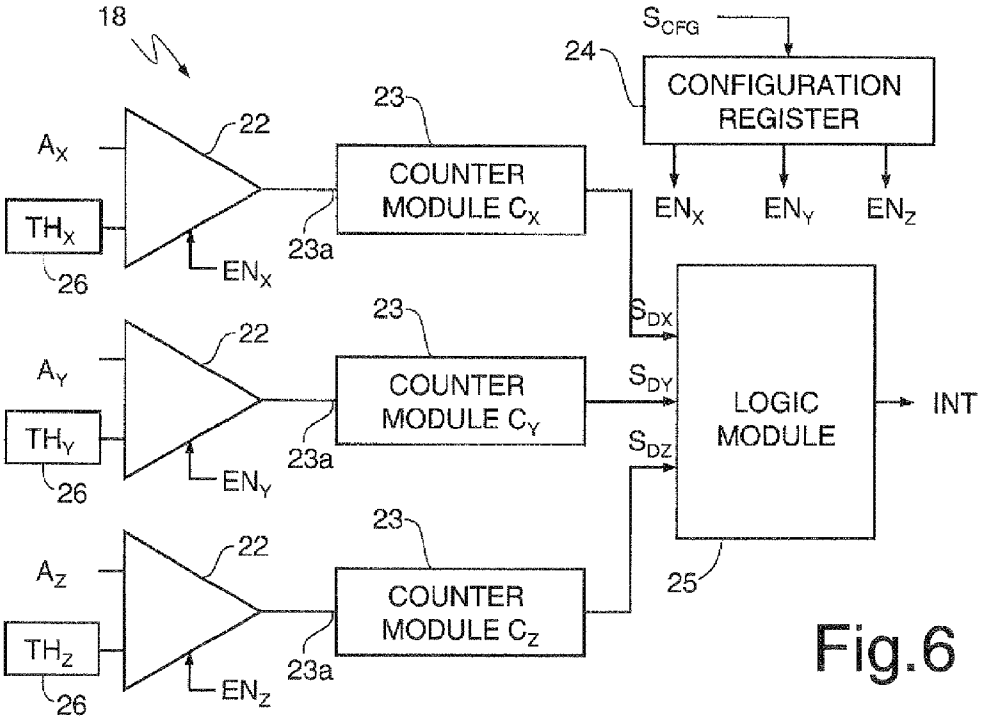
18
S_{CFG}
24
CONFIGURATION REGISTER
EN_X
EN_Y
EN_Z
A_X
TH_X
26
22
EN_X
23
COUNTER MODULE C_X
23a
S_{DX}
A_Y
TH_Y
26
22
EN_Y
23
COUNTER MODULE C_Y
23a
S_{DY}
S_{DZ}
LOGIC MODULE
INT
25
A_Z
TH_Z
26
22
EN_Z
23
COUNTER MODULE C_Z
23a

Fig.6

STATE TRANSITION	OPERATING POSITION	INT
$S_{DX} = 0; S_{DY} = 0/1 \rightarrow S_{DX} = 1; S_{DY} = 0$	LANDSCAPE	1
$S_{DX} = 0/1; S_{DY} = 0 \rightarrow S_{DX} = 0; S_{DY} = 1$	PORTRAIT	1
$S_{DX} = 0/1; S_{DY} = 0/1 \rightarrow S_{DX} = 1; S_{DY} = 1$	PLANE	1
OTHERS	INDETERMINATE	0

Fig.7

STATE TRANSITION	OPERATING POSITION	INT
$S_{DX} = 0; S_{DY} = 0/1; S_{DZ} = 0/1 \rightarrow S_{DX} = 1; S_{DY} = 1; S_{DZ} = 0$	PLANE	1
$S_{DX} = 0/1; S_{DY} = 0; S_{DZ} = 0/1 \rightarrow S_{DX} = 1; S_{DY} = 1; S_{DZ} = 0$	PLANE	1
$S_{DX} = 0; S_{DY} = 0/1; S_{DZ} = 0/1 \rightarrow S_{DX} = 1; S_{DY} = 0; S_{DZ} = 1$	LANDSCAPE	1
$S_{DX} = 0/1; S_{DY} = 0; S_{DZ} = 0/1 \rightarrow S_{DX} = 1; S_{DY} = 0; S_{DZ} = 0$	LANDSCAPE	1
$S_{DX} = 0/1; S_{DY} = 0/1; S_{DZ} = 0 \rightarrow S_{DX} = 0; S_{DY} = 1; S_{DZ} = 1$	PORTRAIT	1
$S_{DX} = 0; S_{DY} = 0/1; S_{DZ} = 0/1 \rightarrow S_{DX} = 0; S_{DY} = 1; S_{DZ} = 1$	PORTRAIT	1
OTHERS	INDETERMINATE	0

Fig.8

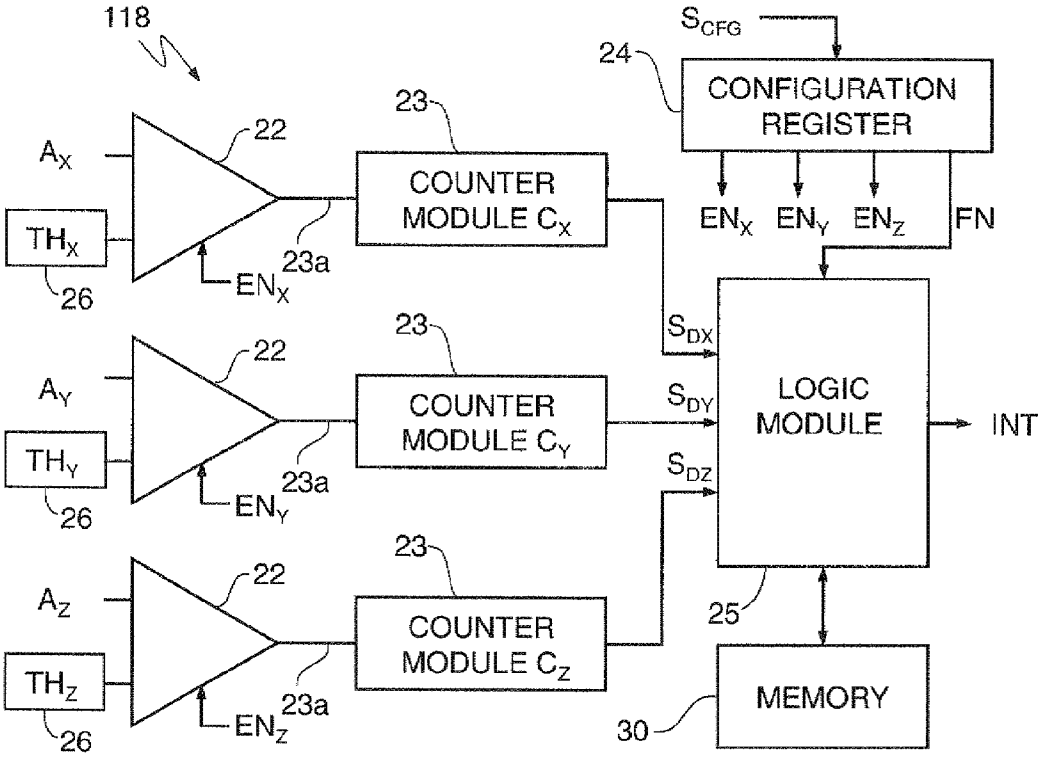
118
S_{CFG}
24
CONFIGURATION REGISTER
23
22
A_X
COUNTER MODULE C_X
EN_X EN_Y EN_Z
FN
TH_X
23a
EN_X
26
S_{DX}
23
22
A_Y
COUNTER MODULE C_Y
S_{DY}
LOGIC MODULE
INT
TH_Y
23a
S_{DZ}
EN_Y
26
23
22
A_Z
COUNTER MODULE C_Z
25
TH_Z
23a
MEMORY
EN_Z
30
26

Fig.9

DEVICE AND METHOD FOR DETECTING THE ORIENTATION OF AN ELECTRONIC APPARATUS

BACKGROUND

[0001] 1. Technical Field

[0002] The present disclosure relates to a device and to a method for detecting the orientation of an electronic apparatus.

[0003] 2. Description of the Related Art

[0004] As is known, the integration of MEMS sensors in electronic devices is becoming increasingly widespread because it enables numerous functionalities to be made available in a simple and intuitive or even automatic way, considerably extending the range of operations that can be carried out. For example, it is possible to implement an interface that enables commands to be imparted to a computer through movement in space, by varying the position or the inclination. Likewise, it is possible to control portable devices, such as palm-top computers, cell phones, photographic cameras, camcorders, audio/video reproducers, and the like.

[0005] In particular, some functions do not require more than an approximate estimate of the position or orientation in space, and it is not necessary to supply precise measurements. For example, a photographic camera, or an apparatus that incorporates the function of photographic camera, can generally be used in a "landscape" configuration, in which a picture is taken that has its major side that is substantially horizontal, and a "portrait" position, in which the major side of the image is vertical. The use of a MEMS inertial sensor as an inclinometer enables the orientation of the device to be determined automatically. During memory saving, it is hence possible to include data regarding the orientation of the image itself, which can be used when it is being displayed on or transferred to a medium external to the electronic device in order to determine the original orientation.

[0006] Additionally, a MEMS inertial sensor can be incorporated in an image-viewer device to determine the orientation thereof during use and accordingly rotate the images that are displayed.

[0007] Even though it is not indispensable to calculate at each moment the value of the total acceleration, processing the data that can be detected through the inertial sensor involves a considerable use of resources. This is disadvantageous for at least two reasons. The first is that the conventional use of the inertial sensor significantly reduces the computing power available for other applications, which increasingly more frequently occupy the system resources in an intensive way. The second reason is linked to power consumption, which, among other things, affects to a considerable extent the autonomy and cost of operation. The minimization of the power consumption is a primary target practically in every sector of modern electronics and, in particular, for portable devices. The higher power consumption of using an unnecessary processing complexity is not justified.

BRIEF SUMMARY

[0008] Embodiments include a device and a method for detecting the orientation of an electronic apparatus that are free from the limitations described.

BRIEF DESCRIPTION OF THE SEVERAL VIEWS OF THE DRAWINGS

[0009] For a better understanding of the disclosure, some embodiments thereof are now described, purely by way of non-limiting example and with reference to the attached drawings, wherein:

[0010] FIG. **1** is a right-hand side view of a portable electronic apparatus, in particular a digital photographic camera, in a first operating configuration;

[0011] FIG. **2** is a front view of the electronic apparatus of FIG. **1**;

[0012] FIG. **3** is a simplified block diagram of the electronic apparatus of FIG. **1**, incorporating a device for detecting orientation in accordance with an embodiment of the present disclosure;

[0013] FIGS. **4***a* and **4***b* are front views of an image sensor incorporated in the electronic apparatus of FIGS. **1** and **2**, in two different operating configurations;

[0014] FIG. **5** is a more detailed block diagram of the device for detecting orientation of FIG. **3**;

[0015] FIG. **6** is a block diagram in further detail of a part of the device for detecting orientation of FIG. **3**;

[0016] FIGS. **7** and **8** are tables used in the device for detecting orientation of FIG. **3**; and

[0017] FIG. **9** is a block diagram of a device for detecting orientation in accordance with another embodiment of the present disclosure.

DETAILED DESCRIPTION

[0018] FIGS. **1-3** show a portable electronic apparatus, provided with an orientation detecting function and designated as a whole by the reference number **1**. In the embodiment described herein, in particular, the electronic apparatus **1** is a digital photographic camera, but could, in other embodiments, be of a different type, such as a camcorder, a video player, a cell phone or a palmtop, just to mention some examples.

[0019] The electronic apparatus **1** comprises a body **2**, a control unit **3**, an image sensor **5** of a digital type, a nonvolatile-memory unit **6**, a display **8**, and an orientation detecting device **10**.

[0020] The body **2** comprises a base **2***a* that normally faces downwards. The body **2** houses inside it the image sensor **5**, the memory unit **6**, and the orientation detecting device **10**. The display **8** is set on the back of the body **2** so as to be visible by a user when he is taking a photograph.

[0021] The image sensor **5** is, for example, a CCD or CMOS sensor and is arranged perpendicular to an optical axis OA of a lens **11** mounted on the body **2**. In addition, the image sensor **5** has a rectangular shape and, during use of the electronic apparatus **1**, is normally set in a "landscape" configuration or in a "portrait" configuration. More precisely, in the "landscape" configuration (FIG. **4***a*), major sides L**1** of the image sensor **5** are substantially horizontal, and minor sides L**2** are often, but not necessarily, vertical. In the "portrait" configuration (FIG. **4***b*), the minor sides L**2** are substantially horizontal and the major sides L**1** are often, but not necessarily, vertical.

[0022] The orientation detecting device **10** is mounted on a board (not shown) so as to be rigidly fixed to the body **2** of the electronic apparatus **1**. In addition, the orientation detecting device **10** is communicably coupled to an interrupt input **3***a* and to data inputs **3***b* of the control unit **3**. More precisely, the orientation detecting device **10** has an interrupt terminal **10***a* accessible from outside and connected to the interrupt input **3***a*. As is shown in FIG. **5**, the orientation detecting device **10** comprises a dedicated processing unit **13** (distinct from the control unit **3**), an inertial sensor **15**, and a read interface **16**, for coupling the inertial sensor **15** to the processing unit **13**. In one embodiment, the inertial sensor **15** is a triaxial microelec-

tromechanical accelerometer (or MEMS accelerometer), having independent detection axes X, Y, Z, and supplies signals each indicating the effect of Earth's gravity force according to a respective one of the three detection axes X, Y, Z.

[0023] In one embodiment, the detection axes X, Y are parallel to a plane of the image sensor **5**. In addition, the detection axis X is substantially horizontal when the electronic apparatus **1** is in a respective first operating position ("landscape"), whereas the detection axis Y is substantially horizontal in a second operating position ("portrait"). Both of the detection axes X, Y are substantially horizontal, with the detection axis Z substantially vertical, when the electronic apparatus **1** is in a third operating position ("plane").

[0024] The read interface **16** converts the signals supplied by the inertial sensor **15** into numeric inertial signals A_X, A_Y, A_Z for respective detection axes X, Y, Z of the inertial sensor **15** itself.

[0025] In addition, the processing unit **13** comprises a control module **17**, an interrupt-generator module **18**, and an input/output (I/O) register **20**.

[0026] The control module **17** receives the inertial signals A_X, A_Y, A_Z from the read interface **16** and determines the magnitude and sign thereof. Hereinafter, reference is made to the magnitude of the inertial signals A_X, A_Y, A_Z, unless otherwise specified. The inertial signals A_X, A_Y, A_Z are forwarded to the interrupt-generator module **18** and loaded (in magnitude and sign) into the I/O register **20**.

[0027] The control module **17** is designed to execute also supervision operations. Among other things, the control module **17** supplies to the interrupt-generator module **18** a configuration string S_{CFG}, which determines an operating mode thereof, as described hereinafter.

[0028] The interrupt-generator module **18** processes the inertial signals A_X, A_Y, A_Z to provide control functions, in particular to determine the orientation of the electronic apparatus **1** in a reference system fixed with respect to the Earth. In the embodiment described, an interrupt signal INT is generated and made available on the interrupt terminal **10***a* following upon changes between the various detectable operating positions and indeterminate positions, which cause state transitions as described hereinafter. The interrupt signal INT is sent to the interrupt input **3***a* of the control unit **3** of the electronic apparatus **1** (see also FIG. **3**). By "generation" or "sending" of the interrupt signal INT is meant that an output of the interrupt-generator module **18** connected to the interrupt input **3***a* of the control unit **3** is brought from an inactive value (for example, "0") to an active value (for example, "1").

[0029] In greater detail, in one operating mode, the interrupt-generator module **18** determines whether the direction of at least one of the detection axes X, Y, Z of the inertial sensor **15** has become substantially horizontal and in response sends the interrupt signal INT to the interrupt input **3***a* of the control unit **3**. In a different operating mode, the interrupt signal INT is generated when the electronic apparatus **1** is oriented in such a way that two of the detection axes X, Y, Z are substantially horizontal simultaneously.

[0030] At the same time, the interrupt-generator module **18** loads an orientation string S_{OR} into the I/O register **20**. The orientation string S_{OR} contains information on orientation of the detection axes X, Y, Z of the inertial sensor **15** and hence of the electronic apparatus **1**. A main field S_{ORP} of the orientation string S_{OR} indicates whether the electronic apparatus **1** is in the first, second or third operating position. Three further sign fields S_{ORX}, S_{ORY}, S_{ORZ} of the orientation string S_{OR} contain values on magnitude and sign of the inertial signals A_X, A_Y, A_Z. In practice, the sign fields S_{ORX}, S_{ORY}, S_{ORZ} supply further information regarding the orientation of the electronic apparatus **1**, in particular the axis or detection axes that are not substantially horizontal. For example, in a biaxial operating mode, the first operating position ("landscape") is defined by the detection axis X being substantially horizontal. Likewise, in a triaxial operating mode, the first operating position ("landscape") is defined by the detection axis X and the detection axis Z being substantially horizontal. In both cases, the value of sign in the sign field S_{ORY}, for the inertial signal A_Y, indicates whether the detection axis Y is facing upwards (positive sign) or downwards (negative sign). The same applies of course for the values contained in the sign fields S_{ORX}, S_{ORZ}, respectively, for the inertial signals A_X, A_Z. This type of information (non-horizontal orientation of the detection axes) is thus available to be exploited by applications that require it.

[0031] Basically, the interrupt-generator module **18** compares the modules of the inertial signals A_X, A_Y, A_Z with respective thresholds TH_X, TH_Y, TH_Z and determines that a detection axis X, Y, Z of the inertial sensor **15** is substantially horizontal if the corresponding inertial signal A_X, A_Y, A_Z remains below the respective threshold TH_X, TH_Y, TH_Z for a time interval T. When one of the detection axes is approximately horizontal and the electronic apparatus **1** is at rest, in fact, the component due to the acceleration of gravity along that detection axis is negligible, in so far as it is approximately perpendicular. In one operating mode, as already mentioned, the interrupt signal INT is generated when the electronic apparatus **1** is brought from one to another of the first, second, and third operating positions. Assume, for example, that the electronic apparatus **1** is initially in the first operating position ("landscape"), in which the detection axis X is substantially horizontal (as likewise the detection axis Z). The electronic apparatus **1** is then rotated so as to be brought into the second operating position ("portrait") with the detection axis Y substantially horizontal (for example, the electronic apparatus **1** is turned about the detection axis Z, which remains horizontal). During displacement, the interrupt-generator module **18** detects that the inertial signal A_X increases until it exceeds the threshold TH_X, since the effect of the acceleration of gravity along the detection axis X increases. Instead, the inertial signal A_Y decreases and goes below the respective threshold TH_Y. If the second operating position is kept stable during the time interval T, the interrupt-generator module **18** sends the interrupt signal INT to the control unit **3** and loads a new orientation string S_{OR} into the I/O register **20**.

[0032] In response to the interrupt signal INT, the control unit **3** of the electronic apparatus **1** (FIG. **3**) executes an updating procedure. In particular, the sequence of operations being executed is temporarily suspended, and the control unit **3** fetches the orientation string S_{OR} from the I/O register **20**. In one embodiment, also the current values of the inertial signals A_X, A_Y are read from the I/O register **20**. Then, the configuration of the apparatus **1** is updated, and the program being executed is resumed. The effect of the updating procedure may depend upon the program executed by the control unit **3**. For example, in the case of a shooting program of a photographic camera, the information on the image orientation of the image to be acquired is modified in accordance with the displacement between the first and the second operating positions and then saved together with the image. In the case of an image-display program, the orientation of the images on the

display **8** is modified if the electronic apparatus **1** is rotated. In some cases, orientation of the apparatus **1** may be temporarily indeterminate, since none of the inertial signals A_X, A_Y, A_Z is below the respective threshold TH_X, TH_Y, TH_Z. According to one embodiment, in these conditions the orientation detecting device **10** does not react. Hence, in the absence of interrupt signals INT, the control unit **3** does not change its configuration, nor the sequence of operations being executed.

[0033] As has been mentioned previously, the interrupt-generator module **18** is configurable through the configuration string S_{CFG} so as to work in different operating modes.

[0034] In one (biaxial) operating mode, only the inertial signals A_X, A_Y for two of the detection axes (for example X, Y) are used, while the third detection axis (for example Z) is disabled in order to reduce the power consumption, or, alternatively, it is used for different functions.

[0035] In a different (triaxial) operating mode, all the inertial signals A_X, A_Y, A_Z are processed, and the first, second, and third operating positions are identified when pairs of inertial signals A_X, A_Y, A_Z are simultaneously lower than the respective thresholds TH_X, TH_Y, TH_Z.

[0036] According to one embodiment, represented in FIG. **6**, the interrupt-generator module **18** comprises three comparators **22**, each co-operating with a respective counter module **23** to define a threshold-comparison stage, a configuration register **24**, and a logic module **25**. The comparators **22** are selectively activatable by respective enable signals EN_X, EN_Y, EN_Z, loaded by the control module **17** into the configuration register **24** with the configuration string S_{CFG}.

[0037] In addition, each of the comparators **22** receives at an input a respective inertial signal A_X, A_Y, A_Z and the corresponding threshold TH_X, TH_Y, TH_Z. The thresholds TH_X, TH_Y, TH_Z are supplied by programmable threshold-generator modules **26**.

[0038] The outputs of the comparators **22** are connected to start/stop inputs **23***a* of respective counter modules **23**. In particular, the counter modules **23** are controlled so as to be activated selectively when the respective inertial signal A_X, A_Y, A_Z is below (in magnitude) the corresponding threshold TH_X, TH_Y, TH_Z and so as to be reset otherwise. The counter modules **23** are configured so as to switch the respective outputs when a count value, incremented according to a timing signal not shown, reaches or exceeds a respective count threshold C_X, C_Y, C_Z, which, in one embodiment, is programmable by the control unit **3** and the control module **17**. The counter modules **23** can have different count thresholds C_X, C_Y, C_Z. In this way, the detection of the orientation can be carried out in differentiated time intervals for the detection axes X, Y, Z.

[0039] The outputs of the counter modules **23** are connected to respective inputs of the logic module **25**, for supplying detection signals S_{DX}, S_{DY}, S_{DZ}, which indicate the orientation of respective detection axes X, Y, Z with respect to the horizontal. The detection signals S_{DX}, S_{DY}, S_{DZ} switch (independently of one another) from a first logic value (for example, "0") to a second logic value (for example, "1") when the corresponding inertial signals A_X, A_Y, A_Z become lower than the respective thresholds TH_X, TH_Y, TH_Z and remain in this condition for quite a long time for the corresponding counter modules **23** to reach the respective count thresholds. In practice, then, the detection signals S_{DX}, S_{DY}, S_{DZ} assume the second logic value ("1") when the corresponding detection axes X, Y, Z remain substantially horizontal, and the first logic value ("0") otherwise.

[0040] The logic module **25** generates the interrupt signal INT starting from the transitions of state of the detection signals S_{DX}, S_{DY}, S_{DZ}, using tables.

[0041] In particular, in one (biaxial) operating mode, the table of FIG. **7** is used. In a different (triaxial) operating mode, the table of FIG. **8** is used. In the tables, the notation "0/1" associated to a detection signal S_{DX}, S_{DY} indicates synthetically that said detection signal S_{DX}, S_{DY} can assume indifferently the first logic value or the second logic value.

[0042] In one embodiment, shown in FIG. **9**, the logic module **25** can be provided by a DSP (Digital Signal Processor), an FPGA (Field Programmable Gate Array) or a microprocessor, and is programmable to execute different functions, based upon the detection signals S_{DX}, S_{DY}, S_{DZ}. For example, the interrupt-generator module, here designated by **118**, is provided with a nonvolatile memory **30**, from which the logic module **25** fetches a sequence of instructions, on the basis of a function FN specified by the control unit **3** in the configuration string S_{CFG}. In particular, the orientation detecting device **10** can be used for implementing functions of free-fall detection, for automatic resuming from standby ("wake-up" function), and the like.

[0043] The orientation detecting device **10** described enables reduction to a minimum computational burden on the control unit **3** of the electronic apparatus **1** in which it is incorporated. In fact, the control unit **3** is completely relieved of the operations related to reading the inertial sensor **15** and to processing the inertial or acceleration signals. These operations are, in fact, carried out autonomously and in parallel by the control module **17** and by the interrupt-generator module **18**. The control unit **3** is involved only in responding to the interrupt signal INT when the orientation of the electronic apparatus **1** is modified significantly. Also in this case, however, the control unit **3** simply has to fetch the orientation string S_{OR} from the I/O register **20** and accordingly update the sequence of instructions being executed.

[0044] The orientation detecting device **10** is moreover flexible. In addition to the possibility of programming the thresholds and the time intervals for recognition of the orientation, the logic module can be reconfigured for executing different functions. In this way, the same physical resources can be shared, for example, by time division, with consequent saving of space and components.

[0045] Also other resources necessary for detection of the orientation can be shared for executing further functions. For example, in apparatuses incorporating a photographic camera or a camcorder, the inertial sensor can be used for image stabilization.

[0046] It is advantageous also to carry out recognition of the position using as reference a horizontal direction. The sensitivity of the inertial sensor according to a detection axis is in fact greater as the detection axis approaches the horizontal. The inertial sensor can then be exploited to the utmost with regard to both precision and speed of response.

[0047] Finally, it is clear that modifications and variations may be made to the device and method described herein, without thereby departing from the scope of the present disclosure.

[0048] In particular, the device for detecting orientation can be used in any electronic apparatus in which the execution of the operations can be affected or controlled by means of the position or the change of position of the electronic apparatus itself. Hence, also the functions that exploit the detection of the position can be other than shooting and display of images.

For example, in a palmtop computer or in a cell phone, the orientation can be exploited for controlling scrolling functions or functions of navigation in menus, for activating functions, for controlling games, and so forth.

[0049] Consequently, it is also evident that the operating position of the electronic apparatus can be determined according to criteria different from the ones schematically illustrated in FIGS. **6** and **7**, according to the application for which the device for detecting orientation is used. For example, in a triaxial operating mode, it is possible to include the recognition of operating positions in which only one of the detection axes is substantially horizontal.

[0050] The various embodiments described above can be combined to provide further embodiments. These and other changes can be made to the embodiments in light of the above-detailed description. In general, in the following claims, the terms used should not be construed to limit the claims to the specific embodiments disclosed in the specification and the claims, but should be construed to include all possible embodiments along with the full scope of equivalents to which such claims are entitled. Accordingly, the claims are not limited by the disclosure.

1. An orientation detection device comprising:
an inertial device having a plurality of independent detection axes and configured to provide inertial signals indicative of effects of gravity with respect to the detection axes, respectively; and
a processing unit configured to process the inertial signals wherein the processing unit comprises an interrupt generator module having:
a threshold comparison stage, configured to compare the inertial signals with respective thresholds; and
a logic module having an input, coupled to the threshold comparison stage, and an output, the logic module configured to generate an interrupt signal on the output in response to at least one of the inertial signals remaining below the respective threshold for a time interval.

2. The device according to claim **1** wherein the logic module is configured to generate the interrupt signal in response to two of the inertial signals concurrently remaining below the respective thresholds.

3. The device according to claim **1** wherein the threshold comparison stage comprises a plurality of comparators for each of the detection axes, respectively, and each comparator receives a respective one of the inertial signals.

4. The device according to claim **3** wherein the threshold comparison stage comprises counter modules, controlled respectively by the comparators so as to be selectively activated, when the inertial signal received from the respective comparator is lower than the corresponding threshold, and to be reset otherwise.

5. The device according to claim **4** wherein the counter modules are configured to provide respective detection signals and to switch the respective detection signals on reaching respective counting thresholds.

6. The device according to claim **5** wherein the counting thresholds are programmable.

7. The device according to claim **1** wherein the threshold comparison stage is selectively activatable.

8. The device according to claim **1** wherein the processing unit comprises a control module and an input/output module.

9. The device according to claim **1** wherein the inertial device comprises a MEMS accelerometer.

10. A system comprising:
a control unit; and
an orientation detection device coupled to the control unit, the orientation detection device comprising:
an inertial device having a plurality of independent detection axes and configured to provide inertial signals indicative of effects of gravity with respect to the detection axes, respectively; and
a processing unit configured to process the inertial signals wherein the processing unit comprises an interrupt generator module having:
a threshold comparison stage configured to compare the inertial signals with respective thresholds; and
a logic module having an input, coupled to the threshold comparison stage, and an output, the logic module configured to generate an interrupt signal on the output in response to at least one of the inertial signals remaining below the respective threshold for a time interval.

11. The system according to claim **10**, further comprising a display coupled to the control unit and an image sensor coupled to the control unit.

12. The system according to claim **10** wherein the control unit is configured to execute sequences of operations and to update a sequence of operations during execution based on the interrupt signal.

13. The system according to claim **12** wherein the processing unit is configured to load the inertial signals in an input/output module and the control unit is further configured to read the inertial signals from the input/output module in response to the interrupt signal.

14. A method, comprising:
detecting orientation of an electronic apparatus, the detecting including:
detecting inertial signals indicative of effects of gravity according to respective detection axes of the inertial device; and
processing the inertial signals, the processing including:
comparing the inertial signals with respective thresholds; and
sending an interrupt signal to the control unit in response to at least one of the inertial signals remaining below the respective threshold for a time interval.

15. The method according to claim **14** wherein the interrupt signal is sent in response to two of the inertial signals concurrently remaining below the respective threshold.

16. The method of according to claim **14** wherein comparing the inertial signals with respective thresholds occurs in a processing unit independent from the control unit.

* * * * *