US 20110314185A1

(19) United States

(12) Patent Application Publication

Conroy et al.

(10) Pub. No.: US 2011/0314185 A1

(43) Pub. Date: Dec. 22, 2011

(54) **MEDIA PROCESSING METHOD AND DEVICE**

(75) Inventors: **David G. Conroy**, El Granada, CA (US); **Barry Corlett**, Brisbane, CA (US); **Aram Lindhal**, Menlo Park, CA (US); **Steve Schell**, Menlo Park, CA (US); **Neil D. Warren**, San Jose, CA (US)

(73) Assignee: **APPLE INC.**, Cupertino, CA (US)

(21) Appl. No.: **13/222,871**

(22) Filed: **Aug. 31, 2011**

Related U.S. Application Data

(62) Division of application No. 12/185,656, filed on Aug. 4, 2008, now Pat. No. 8,041,848.

Publication Classification

(51) **Int. Cl.**

G06F 13/28	(2006.01)
G06F 15/76	(2006.01)
G06F 9/06	(2006.01)
G06F 1/32	(2006.01)

(52) **U.S. Cl.** **710/22**; 713/320; 712/32; 712/E09.003

(57) **ABSTRACT**

A media processing system and device with improved power usage characteristics, improved audio functionality and improved media security is provided. Embodiments of the media processing system include an audio processing subsystem that operates independently of the host processor for long periods of time, allowing the host processor to enter a low power state while the audio data is being processed. Other aspects of the media processing system provide for enhanced audio effects such as mixing stored audio samples into real-time telephone audio. Still other aspects of the media processing system provide for improved media security due to the isolation of decrypted audio data from the host processor.

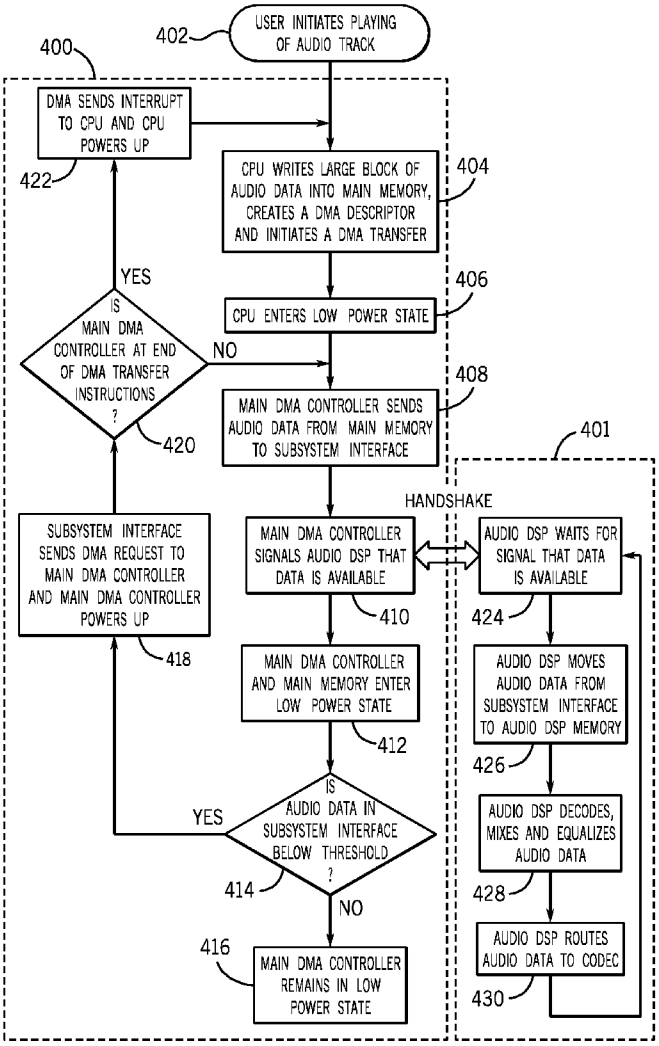

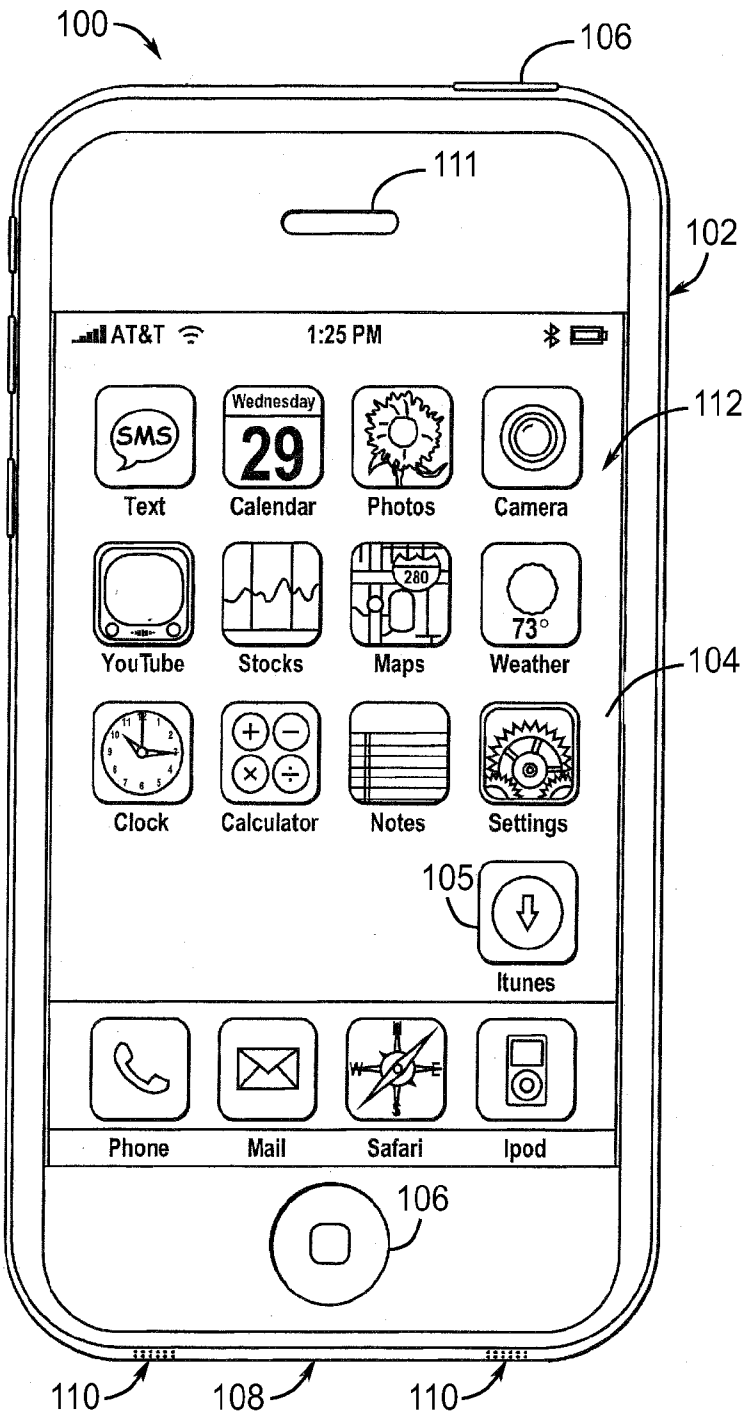
100
106
111
102
AT&T
1:25 PM
112
Text
Wednesday
29
Calendar
Photos
Camera
YouTube
Stocks
280
Maps
73°
Weather
104
Clock
Calculator
Notes
Settings
105
Itunes
Phone
Mail
Safari
Ipod
106
110
108
110

FIG. 1

FIG. 2

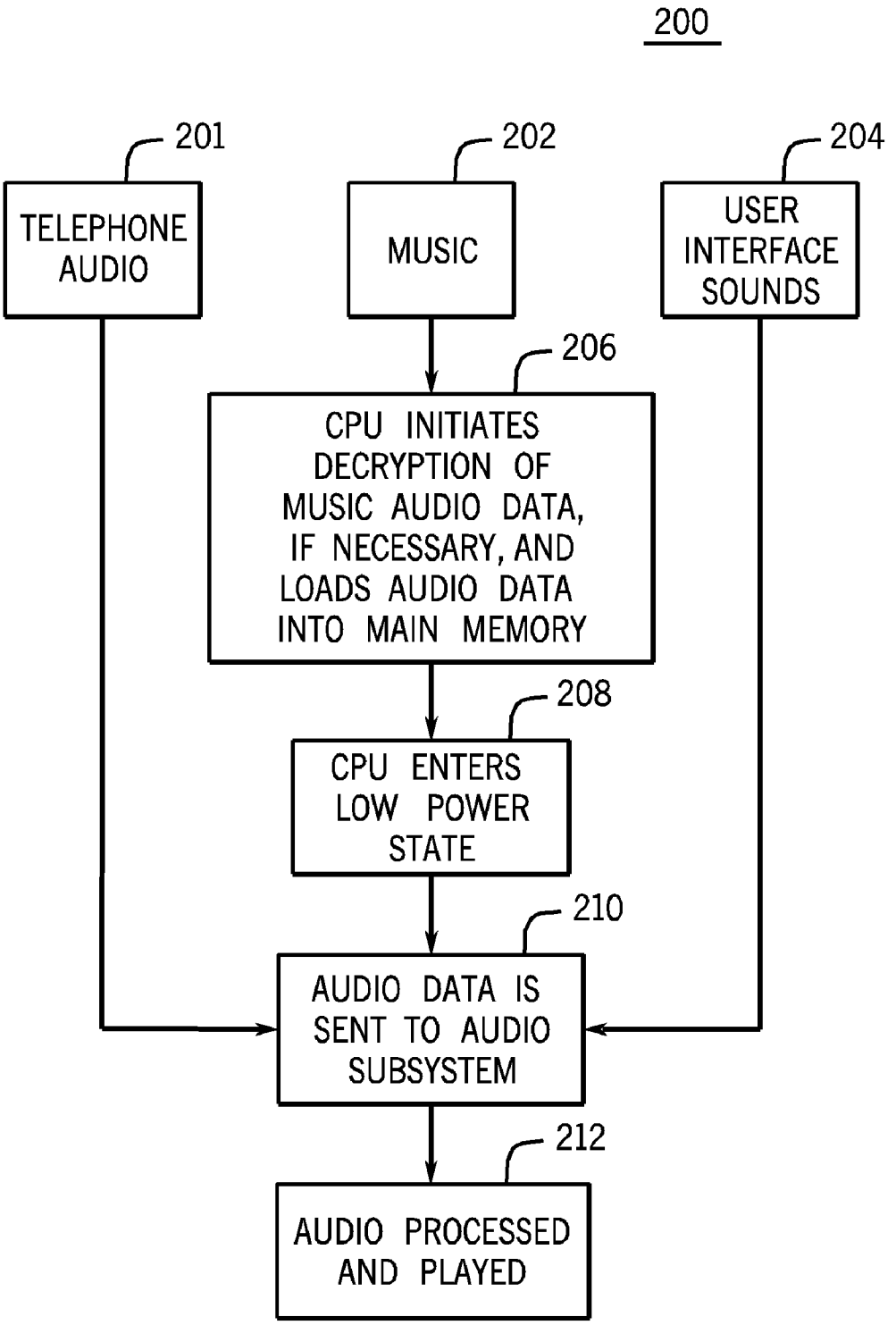
200
201
TELEPHONE AUDIO
202
MUSIC
204
USER INTERFACE SOUNDS
206
CPU INITIATES DECRYPTION OF MUSIC AUDIO DATA, IF NECESSARY, AND LOADS AUDIO DATA INTO MAIN MEMORY
208
CPU ENTERS LOW POWER STATE
210
AUDIO DATA IS SENT TO AUDIO SUBSYSTEM
212
AUDIO PROCESSED AND PLAYED

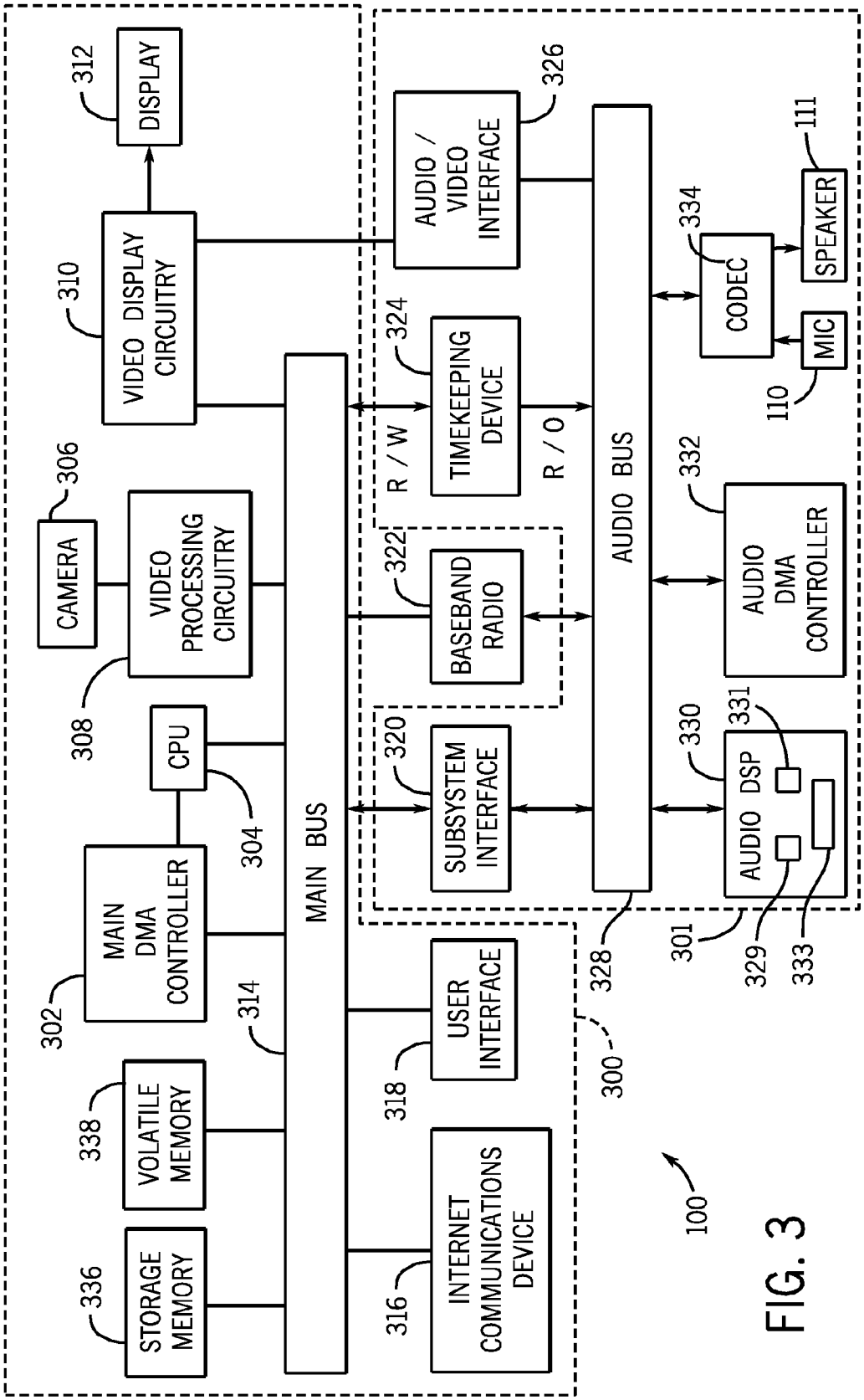
DISPLAY
312
VIDEO DISPLAY CIRCUITRY
310
CAMERA
306
VIDEO PROCESSING CIRCUITRY
308
CPU
304
MAIN DMA CONTROLLER
302
VOLATILE MEMORY
338
STORAGE MEMORY
336
MAIN BUS
314
AUDIO / VIDEO INTERFACE
326
TIMEKEEPING DEVICE
324
R / W
R / O
BASEBAND RADIO
322
SUBSYSTEM INTERFACE
320
USER INTERFACE
318
INTERNET COMMUNICATIONS DEVICE
316
AUDIO BUS
328
CODEC
334
SPEAKER
111
MIC
110
AUDIO DMA CONTROLLER
332
AUDIO DSP
330
331
329
333
301
300
100

FIG. 3

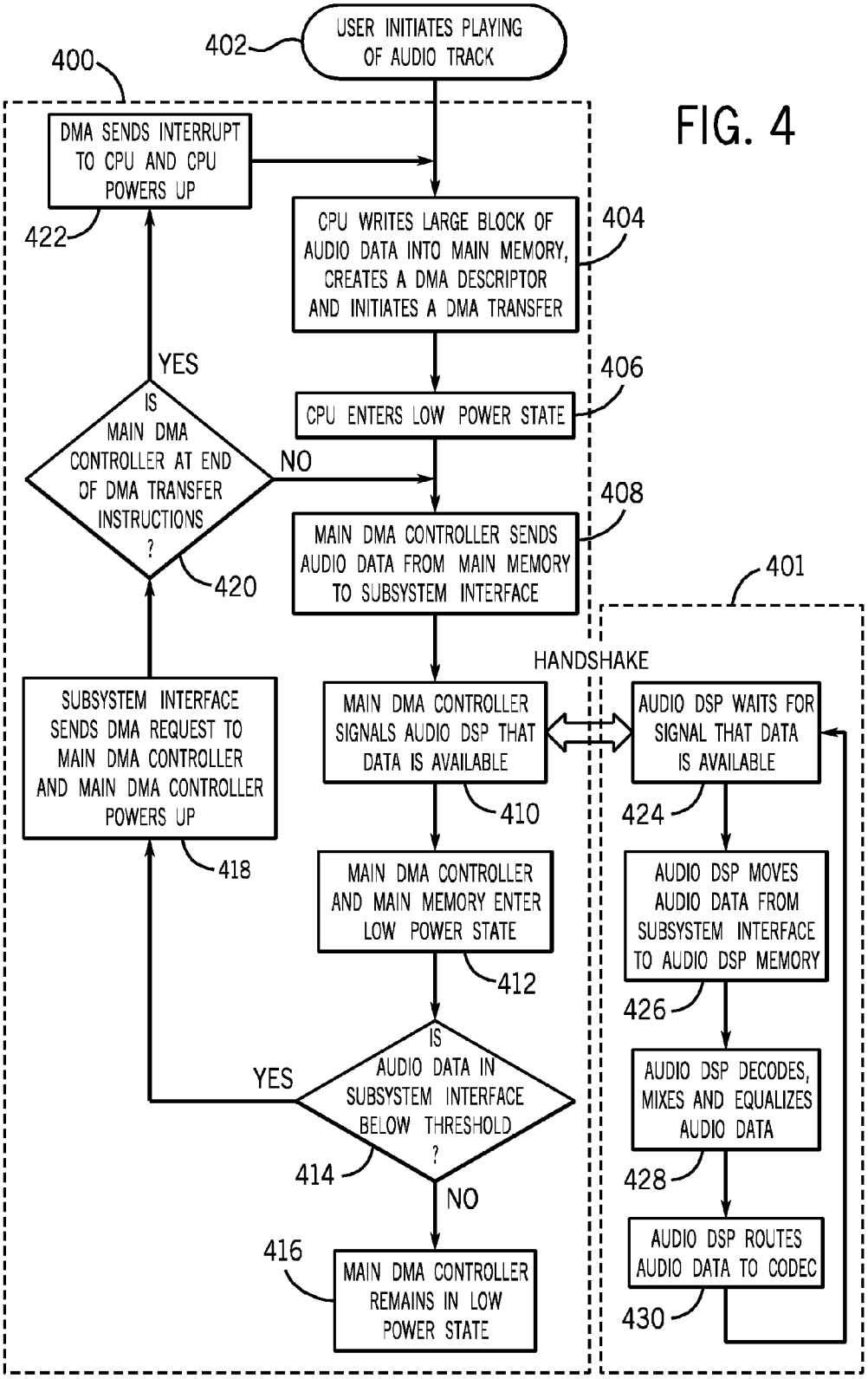
USER INITIATES PLAYING OF AUDIO TRACK
402
400
DMA SENDS INTERRUPT TO CPU AND CPU POWERS UP
422
CPU WRITES LARGE BLOCK OF AUDIO DATA INTO MAIN MEMORY, CREATES A DMA DESCRIPTOR AND INITIATES A DMA TRANSFER
404
CPU ENTERS LOW POWER STATE
406
IS MAIN DMA CONTROLLER AT END OF DMA TRANSFER INSTRUCTIONS ?
YES
NO
420
MAIN DMA CONTROLLER SENDS AUDIO DATA FROM MAIN MEMORY TO SUBSYSTEM INTERFACE
408
401
HANDSHAKE
SUBSYSTEM INTERFACE SENDS DMA REQUEST TO MAIN DMA CONTROLLER AND MAIN DMA CONTROLLER POWERS UP
418
MAIN DMA CONTROLLER SIGNALS AUDIO DSP THAT DATA IS AVAILABLE
410
AUDIO DSP WAITS FOR SIGNAL THAT DATA IS AVAILABLE
424
MAIN DMA CONTROLLER AND MAIN MEMORY ENTER LOW POWER STATE
412
AUDIO DSP MOVES AUDIO DATA FROM SUBSYSTEM INTERFACE TO AUDIO DSP MEMORY
426
IS AUDIO DATA IN SUBSYSTEM INTERFACE BELOW THRESHOLD ?
YES
414
NO
AUDIO DSP DECODES, MIXES AND EQUALIZES AUDIO DATA
428
416
MAIN DMA CONTROLLER REMAINS IN LOW POWER STATE
AUDIO DSP ROUTES AUDIO DATA TO CODEC
430

FIG. 4

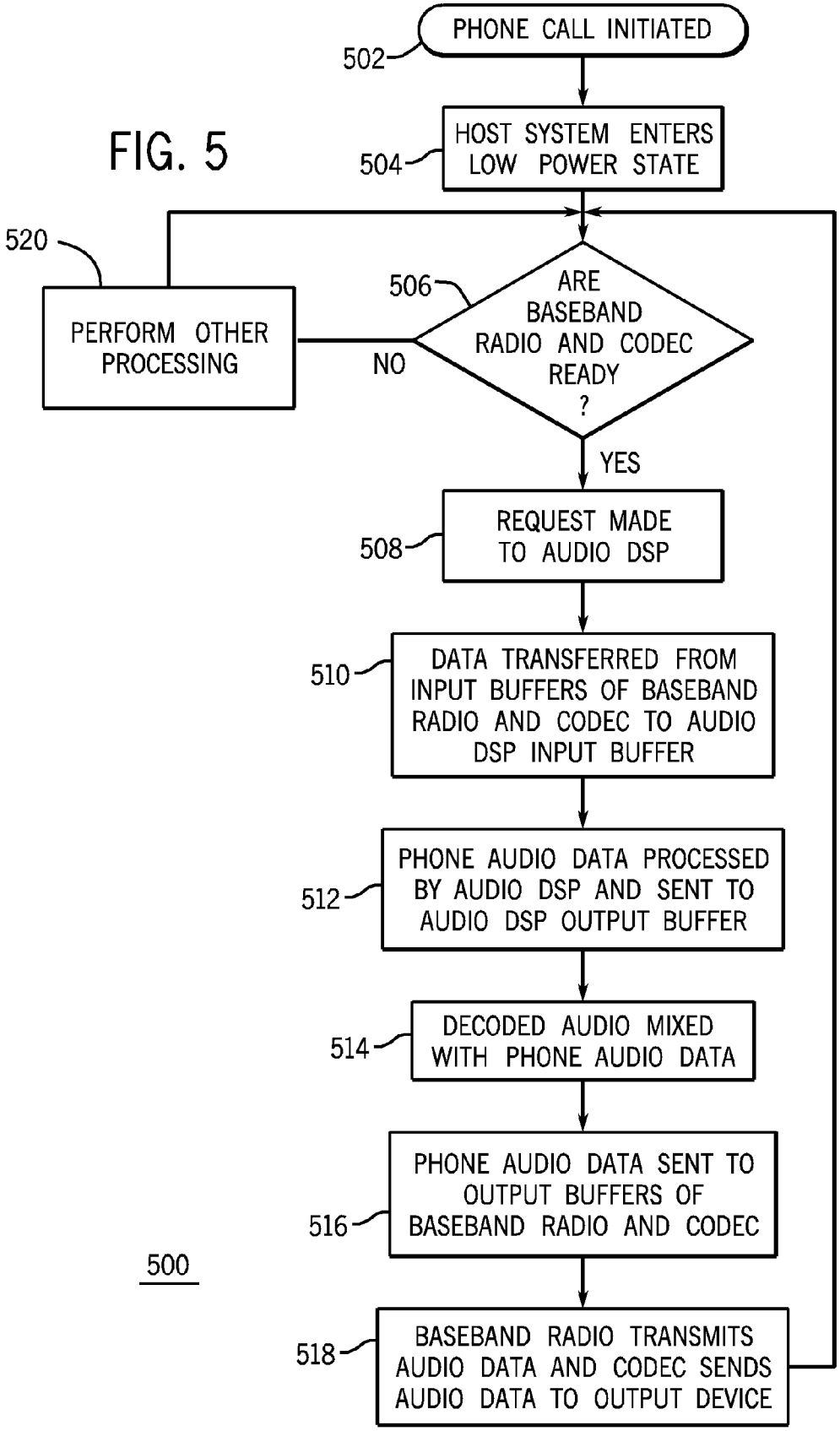
FIG. 5
PHONE CALL INITIATED
502
HOST SYSTEM ENTERS LOW POWER STATE
504
520
PERFORM OTHER PROCESSING
506
ARE BASEBAND RADIO AND CODEC READY ?
NO
YES
REQUEST MADE TO AUDIO DSP
508
DATA TRANSFERRED FROM INPUT BUFFERS OF BASEBAND RADIO AND CODEC TO AUDIO DSP INPUT BUFFER
510
PHONE AUDIO DATA PROCESSED BY AUDIO DSP AND SENT TO AUDIO DSP OUTPUT BUFFER
512
DECODED AUDIO MIXED WITH PHONE AUDIO DATA
514
PHONE AUDIO DATA SENT TO OUTPUT BUFFERS OF BASEBAND RADIO AND CODEC
516
500
BASEBAND RADIO TRANSMITS AUDIO DATA AND CODEC SENDS AUDIO DATA TO OUTPUT DEVICE
518

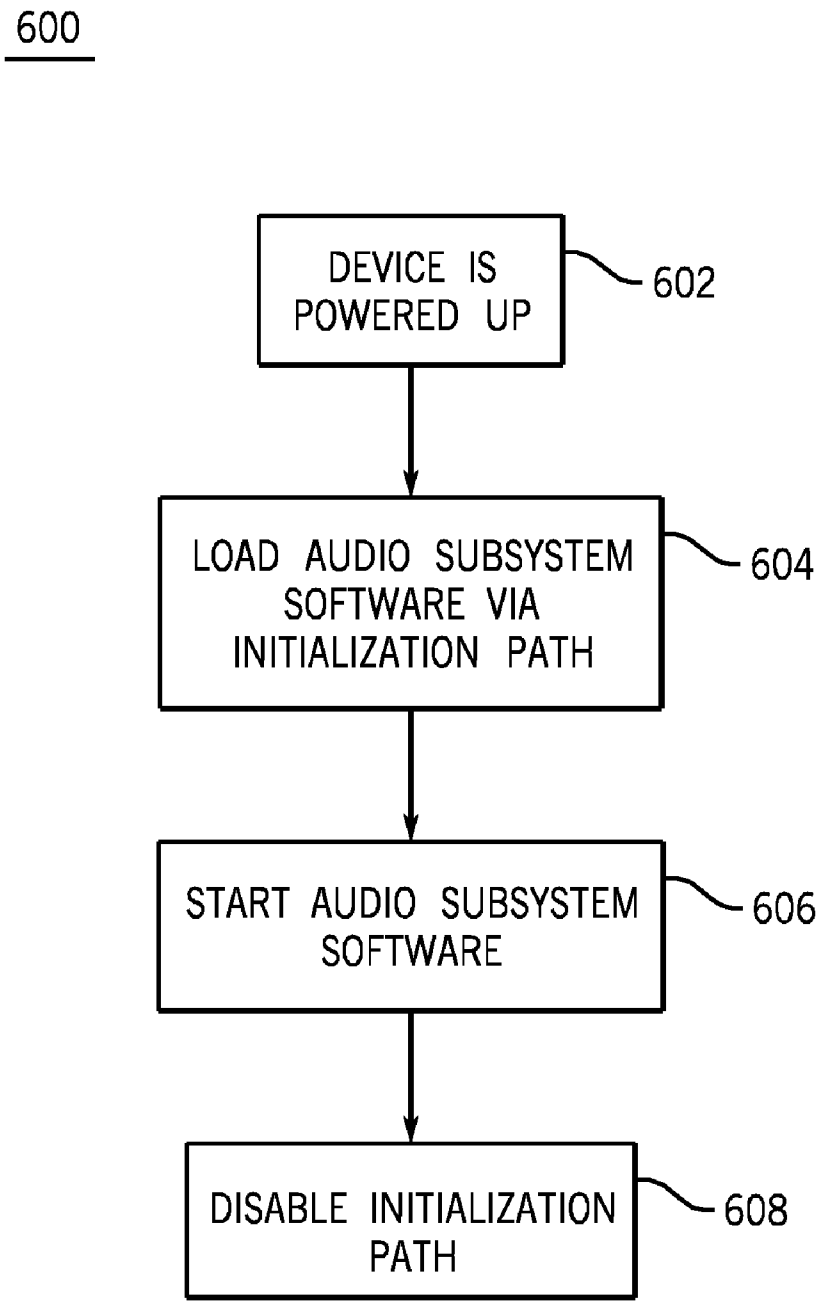
600
DEVICE IS POWERED UP
602
LOAD AUDIO SUBSYSTEM SOFTWARE VIA INITIALIZATION PATH
604
START AUDIO SUBSYSTEM SOFTWARE
606
DISABLE INITIALIZATION PATH
608

FIG. 6

MEDIA PROCESSING METHOD AND DEVICE

CROSS-REFERENCE TO RELATED APPLICATIONS

[0001] The present application is a divisional of U.S. patent application Ser. No. 12/185,656 entitled "Media Processing Method and Device," filed Aug. 4, 2008, the entirety of which is incorporated by reference herein for all purposes.

BACKGROUND OF THE INVENTION

[0002] 1. Field of the Invention

[0003] The present invention relates generally to electronic devices and, more specifically, to processing of audio in an electronic device.

[0004] 2. Description of the Related Art

[0005] This section is intended to introduce the reader to various aspects of art that may be related to various aspects of the present invention, which are described and/or claimed below. This discussion is believed to be helpful in providing the reader with background information to facilitate a better understanding of the various aspects of the present invention. Accordingly, it should be understood that these statements are to be read in this light, and not as admissions of prior art.

[0006] The trend in consumer electronics is to combine multiple functionalities into a single portable electronic device. For example, cell phones and media players are no longer merely distinct devices, each with their own unique capabilities. Rather, cell phone and media player functionalities can now be merged into one multimedia device with a multitude of capabilities. Modern cell phone/media players are often packed with dozens of additional features which include: playing of audio and video, taking of still pictures, recording video, playing video games, GPS navigation, web surfing, downloading of streaming media from the Internet, Bluetooth and WiFi communications, emailing, text messaging, etc.

[0007] One advantage of combining all of these features into one device is that it eliminates the need to carry multiples devices. From an economic standpoint, combined devices also reduce overall cost to the consumer because the electronics that make up the device are used for multiple applications rather than having duplicate electronics with specialized functions. Additionally, by combining an array of electronics with a variety of capabilities it may be possible to provide cross-functionality, in which one device takes advantage of the capabilities of another device.

[0008] Typically, the added functionality of a multimedia device is controlled by a central processing unit (CPU) that has direct access to all of the features provided in the device. For example, in the case of processing stored music, a CPU may directly control the routing of data between various components such as memory, digital signal processors, decoders and media playing circuitry. In this type of design, most data, including copyright protected media such as music or music videos, will eventually pass through the CPU for processing and routing. The drawback of this type of design is that the CPU is continually powered up, active and consuming battery power.

[0009] Additionally, the telephone audio in a typical multimedia device may be processed by dedicated circuitry rather than the CPU. Generally, telephone audio uses dedicated circuitry to guarantee a hard upper bound on real-time delay, both to comply with the various regulations that bear upon telephones, and to avoid delays that degrade the user experience. This may mean that dedicated circuitry is used to process telephone audio so that telephone audio can bypass the CPU. The circuitry dedicated to the processing of telephone audio is typically very simple, limited to equalization and routing functions. The drawback of this approach is that simplicity of the telephone processing circuitry limits the type of electronic enhancements of telephone audio that might otherwise be possible.

[0010] Another drawback of combining multiple capabilities in one device is that as multimedia devices become more functional, the risk of unauthorized copying and distribution of copyright material becomes greater. For example, a multimedia device that is capable of downloading music and/or videos from the Internet can also potentially store the media onto internal memory or an external device and redistribute the media via email or other Internet communication medium as well as by hard copy. Encryption of copyrighted material may help to make such material less susceptible to illegal copying; however, in the typical multimedia device decrypted media may eventually become available to the CPU and, therefore, vulnerable to illegal copying and distribution.

[0011] Thus, typical multimedia or audio devices of the prior art include a CPU that is directly coupled to all of the audio components, including a digital signal processor (DSP) and peripheral input/output devices. In a typical prior art device, the CPU would be directly involved in many of the process steps for processing audio, including routing encoded or compressed data to a digital signal processor, receiving the uncompressed data from the DSP and routing the uncompressed audio to a peripheral device.

[0012] It may be advantageous, therefore, to provide a multimedia device with an audio subsystem that is not directly controlled by the CPU. It would also be advantageous to provide a device that processes a wide variety of media and takes advantage of the enhanced capabilities that a multimedia device can provide, but, at the same time, provides optimal performance of a dedicated device. For example, it may be advantageous to provide a multimedia device that combines the capabilities of an audio player and a cell phone, but also consumes very low power while operating as an audio player or a cell phone. Additionally, it may be advantageous to provide a multimedia device with enhanced copyright protection that prevents users from illegally distributing copyright protected material.

SUMMARY

[0013] Embodiments of the present invention are directed toward a multimedia device with an independent audio subsystem that is loosely coupled to a central processing unit (CPU.) In other words, rather than having audio components directly coupled to a main bus, as in the prior art, all of the audio components are coupled together separately through an independent audio bus to form an independent audio subsystem. The coupling between the host subsystem and the independent audio subsystem is accomplished through one or more data buffers that allow one way communication of data to or from the host subsystem and the audio subsystem. The audio subsystem is independent in the sense that it does not need to further interact with the CPU to accomplish the playing of audio data sent to it from the CPU. Rather, when the CPU sends audio to the audio subsystem, the audio subsystem handles all of the further processing and routing of the audio.

Therefore, the audio subsystem receives encoded data from the CPU as though the audio subsystem were an output device.

[0014] Further, embodiments of the present invention are directed toward a multimedia device with an independent audio subsystem that handles all of the decoding, mixing, equalizing and routing of the audio signals, and then sends the output audio directly to peripheral output devices. Because the audio subsystem handles all of the processing of audio data, the CPU is not needed beyond the stage of routing audio data to the audio subsystem; therefore, the CPU and the rest of the host subsystem may be configured to enter a low power state while audio data is processed. The system may also be configured so that decryption of protected media occurs during the transfer of audio data from the host DMA controller to the audio subsystem. In addition, the audio subsystem may be configured so that a digital signal processor (DSP) handles the routing, equalizing, and mixing of telephone audio data, and also blends other audio samples into telephone audio.

BRIEF DESCRIPTION OF THE DRAWINGS

[0015] These and other features, aspects, and advantages of the present invention will become better understood when the following detailed description of certain exemplary embodiments is read with reference to the accompanying drawings in which like characters represent like parts throughout the drawings, wherein:

[0016] FIG. **1** is a perspective view of a portable electronic multimedia device in accordance with an embodiment of the present invention.

[0017] FIG. **2** is a flow chart showing a general flow of audio data in accordance with an embodiment of the present invention.

[0018] FIG. **3** is a block diagram of a portable electronic multimedia device in accordance with an embodiment of the present invention.

[0019] FIG. **4** is a flow chart of a method for processing music audio in accordance with an embodiment of the present invention.

[0020] FIG. **5** is a flow chart of a method for processing telephone audio in accordance with an embodiment of the present invention.

[0021] FIG. **6** is a flow chart demonstrating a security mechanism in accordance with an embodiment of the present invention.

DETAILED DESCRIPTION OF SPECIFIC EMBODIMENTS

[0022] One or more specific embodiments of the present invention will be described below. In an effort to provide a concise description of these embodiments, not all features of an actual implementation are described in the specification. It should be appreciated that in the development of any such actual implementation, as in any engineering or design project, numerous implementation-specific decisions must be made to achieve the developers' specific goals, such as compliance with system-related and business-related constraints, which may vary from one implementation to another. Moreover, it should be appreciated that such a development effort might be complex and time consuming, but would nevertheless be a routine undertaking of design, fabrication, and manufacture for those of ordinary skill having the benefit of this disclosure.

[0023] Turning now to the figures, FIG. **1** depicts an electronic device **100** in accordance with one embodiment of the present invention. In some embodiments, the electronic device **100** may be a media player for playing music and/or video, a cellular phone, a personal data organizer, or any combination thereof. Thus, the electronic device **100** may be a unified device providing any one of or a combination of the functionality of a media player, a cellular phone, a personal data organizer, and so forth. In addition, the device **100** may allow a user to connect to and communicate through the Internet or through other networks, such as local or wide area networks. For example, the electronic device **100** may allow a user to communicate using e-mail, text messaging, instant messaging, or using other forms of electronic communication. By way of example, the electronic device **100** may be a model of an iPod® having a display screen or an iPhone® available from Apple Inc.

[0024] In certain embodiments the electronic device **100** may be powered by a rechargeable or replaceable battery. Such battery-powered implementations may be highly portable, allowing a user to carry the electronic device **100** while traveling, working, exercising, and so forth. In this manner, a user of the electronic device **100**, depending on the functionalities provided by the electronic device **100**, may listen to music, play games or video, record video or take pictures, place and take telephone calls, communicate with others, control other devices (e.g., the device **100** may include remote control and/or Bluetooth functionality), and so forth while moving freely with the device **100**. In addition, in certain embodiments the device **100** may be sized such that it fits relatively easily into a pocket or hand of the user. In such embodiments, the device **100** is relatively small and easily handled and utilized by its user and thus may be taken practically anywhere the user travels. While the present discussion and examples described herein generally reference an electronic device **100** which is portable, such as that depicted in FIG. **1**, it should be understood that the techniques discussed herein may be applicable to any media-processing electronic device, regardless of the portability of the device.

[0025] In the depicted embodiment, the electronic device **100** includes an enclosure **102**, a display **104**, user input structures **106**, and input/output connectors **108**. The enclosure **102** may be formed from plastic, metal, composite materials, or other suitable materials or any combination thereof. The enclosure **102** may protect the interior components of the electronic device **100** from physical damage, and may also shield the interior components from electromagnetic interference (EMI).

[0026] The display **104** may be a liquid crystal display (LCD) or may be a light emitting diode (LED) based display, an organic light emitting diode (OLED) based display, or other suitable display. In accordance with certain embodiments of the present technique, the display **104** may display a user interface **112** as well as various images **105**, such as logos, avatars, photos, album art, and so forth. Additionally, in one embodiment the display **104** may be a touch screen through which a user may interact with the user interface. The display **104** may also display various function and/or system indicators to provide feedback to a user, such as power status, call status, memory status, etc. These indicators may be in incorporated into the user interface displayed on the display **104**. As discussed herein, in certain embodiments the user interface **112** may be displayed on the display **104**, and may provide a means for a user to interact with the electronic

device **100**. The user interface may be a textual user interface, a graphical user interface (GUI), or any combination thereof, and may include various layers, windows, screens, templates, elements or other components that may be displayed in all of or areas of the display **104**.

[0027] In one embodiment, one or more of the user input structures **106** are configured to control the device **100**, such as by controlling a mode of operation, an output level, an output type, etc. For instance, the user input structures **106** may include a button to turn the device **100** on or off. In general, embodiments of the electronic device **100** may include any number of user input structures **106**, including buttons, switches, a control pad, keys, knobs, a scroll wheel, or any other suitable input structures. The input structures **106** may work with a user interface displayed on the device **100** to control functions of the device **100** or of other devices connected to or used by the device **100**. For example, the user input structures **106** may allow a user to navigate a displayed user interface or to return such a displayed user interface to a default or home screen.

[0028] The user interface **112** may, in certain embodiments, allow a user to interface with displayed interface elements via the one or more user input structures **106** and/or via a touch sensitive implementation of the display **104**. In such embodiments, the user interface provides interactive functionality, allowing a user to select, by touch screen or other input structure, from among options displayed on the display **104**. Thus the user can operate the device **100** by appropriate interaction with the user interface **112**. The user interface **112** may of any suitable design to allow interaction between a user and the device **100**. Thus, the user interface **112** may provide windows, menus, graphics, text, keyboards or numeric keypads, scrolling devices, or any other elements. In one embodiment, the user interface **112** may include screens, templates, and UI components, and may include or be divided into any number of these or other elements. The arrangement of the elements of user interface **112** may be hierarchical, such that a screen includes one or more templates, a template includes one or UI components. It should be appreciated that other embodiments may arrange user interface elements in any hierarchical or non-hierarchical structure.

[0029] The electronic device **100** may also include various input and output ports **108** to allow connection of additional devices. For example, a port **108** may be a headphone jack that provides for connection of headphones. Additionally, a port **108** may have both input/output capabilities to provide for connection of a headset (e.g. a headphone and microphone combination). Embodiments of the present invention may include any number of input and/or output ports, including headphone and headset jacks, universal serial bus (USB) ports, Firewire (IEEE-1394) ports, and AC and/or DC power connectors. Further, the device **100** may use the input and output ports to connect to and send or receive data with any other device, such as other portable electronic devices, personal computers, printers, etc. For example, in one embodiment the electronic device **100** may connect to a personal computer via a Firewire (IEEE-1394) connection to send and receive data files, such as media files.

[0030] The electronic device **100** may also include various audio input and output portions. For example, an input receiver **110** may be a microphone that receives user audio input. Additionally, output transmitter **111** may be a speaker that transmits audio signals to a user. Input receiver **110** and output transmitter **111** may be used in conjunction as audio elements of a telephone.

[0031] Turning to FIGS. **2** and **3**, a diagrammatical representation of data flow in the electronic device **100** in accordance with an embodiment of the present invention is depicted. As shown in FIG. **3**, a typical device **100** may include a host subsystem **300** and an audio subsystem **301**. In one embodiment, host subsystem **300** and audio subsystem **301** may be parts of a single integrated circuit. In another embodiment, host subsystem **300** and/or audio subsystem **301** may be distributed over one or more integrated circuits. As will be discussed further below, the host subsystem **300** includes a CPU **304**, which controls and directs most functions of the device **100** other than audio processing. The audio subsystem **301**, on the other hand, controls substantially all of the audio processing functions of the device **100**.

[0032] As shown in FIG. **2** and discussed in further detail below, some examples of audio signals that may be processed by the audio subsystem **301** include telephone audio **201**, music and audio related to an audio/video signal **202**, and user interface sounds **204**. Some audio data, such as telephone audio **201** and user interface sounds **204**, may be processed directly by the audio subsystem **301** with little or no involvement of the CPU **304**, as shown in block **210**. Other audio signals, however, may be processed by the CPU **304** before being sent to the audio subsystem **301**. For example, in block **206**, the CPU **304** causes music audio data to be decrypted and loaded into main memory. Next, at step **208**, the CPU **304** enters a low power state while audio data is sent to the audio subsystem **301**. Finally, at step **212**, audio data is processed by the audio subsystem **301** and played, i.e., sent to the appropriate output device.

[0033] Because the audio processing at step **212** can take place with little or no involvement of the CPU, the CPU is free to carry out other processing tasks or alternatively to enter a low power state which extends the useful battery life of the electronic device **100**. It should also be appreciated that in other embodiments not depicted by FIG. **2**, audio data may be processed by the audio subsystem then sent to the CPU via volatile memory **338**. For example, the electronic device **100** may include a digital microphone coupled to the audio subsystem, such that audio received through the digital microphone may be processed by the audio subsystem and then sent to the CPU to be processed and/or stored.

[0034] Turning now to FIG. **3**, a block diagram of a circuitry used in the electronic device **100** is provided. As seen in the block diagram, the electronic device **100** includes a main bus **314** to which most of the peripheral electronic components are communicatively coupled. The main bus **314** may combine the functionality of a direct memory access (DMA) bus and a programmed input/output (PIO) bus. In other words, the main bus **314** may facilitate both DMA transfers and direct CPU read and write instructions. In embodiments of the present invention, the main bus **314** may be one of the Advanced Microcontroller Bus Architecture (AMBA®) compliant data buses.

[0035] The electronic device **100** also includes a CPU **304**. The CPU **304** may be any general purpose microprocessor known in the art such as a Reduced Instruction Set Computer (RISC) from ARM Limited. The CPU **304** runs the operating system of the electronic device **100** and manages the various functions of the electronic device **100**. As such, it may be coupled to the main bus **314** and configured to transmit PIO

instructions to the various devices coupled to the main bus **314**. Additionally, the CPU **304** may be configured to initiate DMA transfers. In one embodiment, PIO instructions from CPU **304** do not pass directly to the main bus. Rather, as will be explained further below, the CPU **304** is directly coupled to the main DMA controller **302**, and PIO instructions issuing from the CPU **304** pass through the main DMA controller **302** to the main bus **314**. The CPU **304** may contain one or more caches whose operation may be completely internal to CPU **304**, or which may observe and, in some cases, intercept, data transfers passing over main bus **314** that access volatile memory **338**. The CPU **304** may include or be coupled to a read-only memory (ROM) (not shown), which may hold the operating system and/or other device firmware that runs on the electronic device **100**.

[0036] The electronic device **100** may also include a volatile memory **338** electrically coupled to main bus **314**. The volatile memory **338** may include, for example, any type of random access memory (RAM), and may also include non-volatile memory devices, such as ROM, EPROM and EEPROM or some combination of volatile and non-volatile memory. Additionally, the volatile memory **338** may also include a memory controller that controls the flow of data to and from the volatile memory **338**. In embodiments of the present invention, the volatile memory **338** is used to store compressed video and/or audio files in encrypted form.

[0037] Embodiments of the present invention may also include a main DMA controller **302** coupled to the CPU **304** and main bus **314**. The main DMA controller **302** may be configured to route data between various devices connected to the main bus **314** including the volatile memory **338**. The routing of data within the electronic device **100** may be configured to occur in a variety of ways. For example, the CPU **304** may direct the routing of data through the main DMA controller **302** by creating DMA transfer instructions in the volatile memory **338**, commanding DMA controller **302** to begin executing those DMA transfer instructions, and then commanding an I/O device, attached to main bus **314**, to send transfer requests, and to transmit and/or receive data from the main DMA controller **302**. In alternative embodiments, the CPU **304** may route data directly by passing data through data registers contained in the CPU **304**. In other embodiments the electronic device **100** may be implemented without a DMA controller, in which case the CPU **304** may directly control the flow of data through the electronic device **100** through PIO instructions.

[0038] In addition to the volatile memory **338**, the electronic device **100** may also include a storage memory **336** connected to the main bus **314**. The storage memory **336** may include flash memory, such as, for example, NOR or NAND flash memory, but may also include any kind of electronic storage device, such as, for example, magnetic or optical disks. In embodiments of the present invention, the storage memory **336** is used to store software and user files such as phonebook entries, pictures, audio and video files, ring tones, archived text messages and emails, etc.

[0039] Also coupled to the main bus **314** is an Internet communications device **316**. The Internet communications device **316** may include any method for communicating with the Internet. For example, the Internet communications device **316** may include a wireless communications device operating in accordance with IEEE 802.11 standards or an Ethernet communication device operating in accordance with IEEE 802.3 standards. In some embodiments, Internet communication device **316** may perform only a portion of the task of communication with the Internet; for example, in some embodiments Internet communication device **316** may only be the physical communications link, and the rest of the task of communication with the Internet is performed by software executing on CPU **304**.

[0040] Also connected to the main bus **314** is a user interface **318**. The user interface **318** may include a variety of user interface tools such as, for example, buttons, knobs, touch screens, trackballs or any other user interface known in the art.

[0041] Also connected to the main bus **314** are video components, including the video processing circuitry **308**, the video display circuitry **310** and the display **312**. The video processing circuitry **308** may be configured to compress video data into various formats and send the compressed video data to other parts of the system. For example, the video processing circuitry **308** may be configured to compress video data obtained from camera **306** into a JPEG or MPEG format and send the compressed video data to volatile memory **338** via main bus **314**. The video processing circuitry **308** may also be configured to decompress video data of various encoding formats and send the decompressed video data to other parts of the system. For example, the video processing circuitry **308** may be configured to decompress JPEG or MPEG encoded video data obtained from volatile memory **338** and send the decompressed video data to the volatile memory **338** or the video display circuitry **310**.

[0042] The video display circuitry **310** may be configured to convert the decompressed video data into a video signal that may then be sent to the display **312**. The video display circuitry may also be configured to generate video data in a wide range of video formats. For example, the video display circuitry **310** may generate an analog signal such as an NTSC compatible signal or a digital signal such as an ATSC or HDMI compatible signal. Furthermore, the display **312** may be any type of video display device, such as, for example, an LCD screen. In embodiments of the present invention the display **312** is an integral part of the electronic device **100**; however, in alternate embodiments, the display **312** may be an external device coupled to the electronic device **100** through a data transfer medium such as an HDMI interface, for example.

[0043] Together, the video components **308**, **310**, and **312** may be used to display various forms of video content. For example, the video components **308**, **310**, and **312** may be used to display the real-time camera view through the camera **306**, or still pictures that have been previously recorded and stored. Additionally, the video components **308**, **310**, and **312** may be used to display the video portion of a media with both audio and video content. For example, the video components **308**, **310**, and **312** may be used to process and display audio/video media such as electronic games or broadcast media delivered to the electronic device **100** from any possible source, such as, for example, a broadcast television signal, streaming media from the Internet, or an audio/video file stored in the storage memory **336**.

[0044] Also connected to the main bus **314** is the data side of the baseband radio **322**. The baseband radio **322** transmits and receives wireless telephone signals. The data side of the baseband radio **322** is connected to the host subsystem **300** so that the CPU **304** can directly control various features of the broadband radio **322**, such as initiation and termination of incoming or outgoing phone calls, and so that CPU **304** can

transmit and receive data over a wireless telephone data service (when doing this, baseband radio **322** has the same role as internet communications device **316**). As will be explained in further detail below, the audio side of the baseband radio is connected to the audio bus **328** so that telephone audio can be processed by the audio subsystem independently of the CPU **304**. In other words, none of the audio data from the baseband radio passes to the main bus **314**.

[0045] FIG. **3** also depicts an embodiment of an independent audio subsystem **301** loosely coupled to the host subsystem **300** in accordance of the present invention. The audio subsystem is described as "loosely coupled" because, unlike prior art, the components of the audio subsystem are not directly coupled to the main bus **314** and are neither directly accessible by the CPU **304** nor able to directly access main bus **314**. Rather, all of the audio components included in the audio subsystem **301** are coupled to each other through an audio bus **328** that is independent from the main bus **314**, and the coupling between the host subsystem **300** and the audio subsystem **301** is accomplished through a set of data lines controlled by an subsystem interface **320**, which will be described further below. In embodiments of the present invention, the audio bus **328** may be one of the AMBA® compliant data buses. Additionally, the audio subsystem **301** may also include an audio DMA controller **332** that facilitates DMA transfers within the audio subsystem **301**.

[0046] Also coupled to the audio bus **328** is the audio side of the baseband radio **322**, which includes a transmitter, a receiver and other electronics associated with wireless telephone communications such as, for example, cellular telephone communications. Audio data generated by the baseband radio **322** is processed by the audio subsystem **301** in a manner that will be described below. Embodiments of the present invention may also include other wireless communications devices such as, for example, a Bluetooth compliant wireless device (not depicted).

[0047] Also coupled the audio bus **328** is the CODEC **334**, which is configured to encode, decode and route data to and from one or more audio input and output devices, such as microphone **110** and speaker **111**. Specifically, the CODEC **334** receives analog data from an audio input device such as the microphone **110**, converts the analog audio data into digital audio data and sends the digital audio data to an audio DSP **330** through the audio bus **328**. Further, the CODEC **334** receives digital audio data from the audio DSP **330**, converts the digital audio data into analog audio data and sends the analog audio data to an audio output device such as the speaker **111**. In embodiments of the present invention, the CODEC **334** includes two communication channels so that the sending and receiving of audio data, as described above, can occur simultaneously.

[0048] The audio DSP **330** includes a core processor **333**, such as an ARM® AudioDE™ processor, as well as data a memory, program memory, DMA channels, one or more input buffers **329**, and one or more output buffers **331**. In one embodiment, the audio DSP **330** may be an ARM® r2p0 AMCSS processor. The audio DSP **330** controls the routing of data within the audio subsystem **301** and performs various processing of audio data, such as compression/decompression, equalization and mixing of audio from different sources. In embodiments of the present invention, the audio DSP **330** is configured to switch between various audio processing tasks, with a grain of a few milliseconds, in order to avoid delays that may be unacceptable by regulations and/or undesirable to users of the electronic device **100**. For example, the audio DSP **330** may be configured so that if the audio DSP **330** is processing a music audio when the CPU **304** initiates an incoming telephone call, the audio DSP **330** will quickly switch to the processing of real-time telephone audio in order to avoid a delay in the telephone conversation.

[0049] The quick switching ability of the audio DSP **330** may be facilitated by the use of a scheduling hardware and scheduling software running in the program memory of the audio DSP **330**. In one embodiment, the scheduler breaks each processing task (e.g., decompression of music audio, or equalization of telephone audio) into a series of smaller task segments, each of which can be processed very quickly. The scheduler then determines which task segment is fed to the core processor **333** at any given time. Because the scheduler feeds the core processor **333** with small task segments that are quickly processed, the scheduler does not need to interrupt the core processor **333** to switch the core processor **333** to a different task. Rather, the scheduler waits until the previous small task segment is finished processing before feeding a task segment related to the different task.

[0050] Because the most common task performed by the audio DSP **330** will be the decoding and post-processing (for example, equalization) of audio, the typical task segment will be decoding or post-processing of a small segment of audio samples. The number of samples in the small segment may be determined by the audio sampling rate for the particular task, as well as the maximum time delay that can be allowed for the most delay-sensitive task, which will usually be the processing of telephone audio, as delays in real-time conversation are both forbidden by telephone regulations and bothersome to the user. Regarding sampling rate, the typical sampling rates will be approximately 8 kilohertz for telephone audio and 44.1 kilohertz for music. Regarding the maximum allowed time delay, in embodiments of the present invention, the audio subsystem **301** is configured to process real-time audio, such as telephone audio, with a best-case total time delay of 2 milliseconds (ms) from the time the audio signal is received from the microphone or radio receiver to the time the audio signal is played by the speaker or transmitted by the radio transmitter. In other embodiments, up to a 5 ms delay may be acceptable. For example, in some embodiments of the present invention, the total processing time for real-time audio includes a 1 ms delay due to the input device or receiver, a 1 ms delay due to the audio DSP **330**, and a 1 ms delay due to the output device or transmitter. Given the above design constraints, the size of the small task segments will typically be around 8 samples when processing telephone audio, and around 44-45 samples when processing music.

[0051] Also connected to both the main bus **314** and the audio bus **328** is the subsystem interface **320**, which is the main flow path for information flowing between the host subsystem **300** and the audio subsystem **301**, including audio data, control commands, status information and initialization information. The subsystem interface **320** may include one or more memory buffers, such as, for example, first-in-first-out (FIFO) buffers or ring buffers, for carrying streaming audio data from the host subsystem **300** to the audio subsystem **301**. Furthermore, although the subsystem interface **320** may include a single output buffer channel that carries data from the host subsystem **300** to the audio subsystem **301**, the subsystem interface **320** may also include a plurality of buffer channels, including at least one input buffer channel that carries data from the audio subsystem **301** to the host sub-

system **300**. In one embodiment, the subsystem interface **320** includes four buffer channels that can be individually configured as input or output and are usually configured as three output buffer channels and one input buffer channel. By providing more than one buffer channel to carry data to the audio subsystem **301**, streaming audio, such as music audio, can be kept separate from user interface sounds. The subsystem interface **320** may also include one or more electronic registers, used to carry control information from the CPU **304** to the audio subsystem **301** and to carry status information from the audio subsystem **301** to the CPU **304**. Both the CPU **304** and the audio DSP **330** may have read/write access to these registers.

[0052] Additionally, the audio subsystem **301** may also include an amount of audio RAM, or other form of electronic data storage, sufficient to temporarily store a significant quantity of streaming audio data in either compressed or un-compressed format that has been sent by host subsystem **300** and is waiting to be processed by the audio DSP **330**. In some embodiments, the audio RAM may be included in the subsystem interface **320**. In other embodiments, the audio RAM may be included in the audio DSP **330**, in which case the input buffer **329** and the output buffer **331** may be included in the audio RAM. In yet other embodiments, the audio RAM may be a separate component coupled to the audio bus **328**. By providing an audio RAM to temporarily store streaming audio, the host subsystem **300** can go into a low power mode while the audio DSP continues to process audio data, as will be explained in more detail below. In some embodiments, the audio subsystem **301** may include a relatively small amount of audio RAM, on the order of ten kilobytes or less. In other embodiments, the audio subsystem **301** may include several hundred kilobytes of audio RAM. It will be appreciated that increasing the amount of audio RAM included in the audio subsystem **301** will increase the length of time the host subsystem **300** can remain in low power mode. In some embodiments, the audio RAM may hold the equivalent of ten to thirty seconds worth of audio data.

[0053] Additionally, a means of synchronizing audio data with video data is provided. Synchronization of audio and video data may be desirable because, in embodiments of the present invention, the audio and video components of an audio/video signal are processed separately. Specifically, the video component of an audio/video signal is sent to the video processing circuitry **308**, while the audio component of the audio/video signal is sent to the audio subsystem **301**. Furthermore, once audio data is sent to the audio subsystem **301**, the CPU **304** is unable to retrieve or manipulate the audio data. Rather, audio data processed by the audio DSP **330** may be played by sending the audio signal to the CODEC **334** or some other audio output device within the audio subsystem **301** such as an S/PDIF output or the audio/video interface **326**. Therefore, without a means to synchronize the playing of audio and video data, the unequal processing times that may exist between the audio processing circuitry and the video processing circuitry could cause the video component to play out of synch with the audio component.

[0054] To make it possible for software running on the host subsystem **300** and the audio processing subsystem **301** to ensure that the audio and video components of an audio/video signal play with the correct timing, a timekeeping device **324** is connected to both the main bus **314** and the audio bus **328**. The timekeeping device **324** may include a master timebase, a register that increments continuously at a constant frequency. Both the host subsystem **300** and the audio subsystem **301** have access to the time information generated by the timekeeping device **324**. This timing information may then be used to synchronize audio output with video output when the electronic device **100** is generating audio/video output. For example, the audio component of an audio/video may be encoded with a timestamp before being sent to the audio subsystem **301**. The timestamp would inform the audio subsystem **301** of the appropriate time to play the segment of audio, with the master timebase serving as the authoritative source of the current time. For another example, timing information may be read from the timekeeping device **324** and written to a data register in the subsystem interface **320** when audio samples corresponding to interesting points in an audio stream are delivered to CODEC **334**. The timing information may then inform the CPU **304** of the time that a particular audio sample has been played by the CODEC **334**.

[0055] The audio/video interface **326** provides a means for recombining the processed audio and video in embodiments in which the audio/video signal is sent to a display device that can utilize a combined audio/video signal. For example, the audio/video interface **326** may convert the audio data into a High-Definition Multimedia Interface (HDMI) format. Audio data sent through the audio/video interface **326** to the video display circuitry **310** may include timing information read from the timekeeping interface **324**. Because this timing information is common to both the host subsystem **300** and the audio sub-system, the information can be used to synchronize the audio and video signals.

[0056] It should be noted that various configurations and capabilities of the electronic device **100** may be utilized in accordance with embodiments of the present invention. As an example, embodiments of the present invention may be configured without the video processing circuitry **308**, the video display circuitry **310**, or the display **312**. Additionally, embodiments of the present invention may support a variety of input media such as Ethernet or USB. Regarding the audio subsystem **301**, the electronic device **100** may include, among other things, a digital microphone connected to the audio bus **328**, configured to allow a user to record audio samples or voice commands. Although it is beyond the scope of the present description to detail every possible combination of components that may be included in the electronic device **100** and the audio subsystem **301**, it will be appreciated by those of ordinary skill in the art that various other components may be added or eliminated without deviating from the spirit and scope of the present invention. It should also be noted that some or all of the components described in FIG. **3** may be implemented in a system on a chip (SOC). Furthermore, in some embodiments, the audio subsystem may be implemented in its own separate chip.

[0057] Additionally, it will also be appreciated that certain embodiments may also include the processing of other types of media, such as video, within a loosely coupled subsystem. For example, the video processing circuitry **308**, camera **306**, video display circuitry **310** and display **312** may be coupled together by a video bus to form a second subsystem which communicates with the host subsystem **300** through a second subsystem interface located between the main bus **314** and the video bus. For another example, the video and audio components may all be included in the audio subsystem **301**, in which case the audio subsystem **301** may actually be an audio/video subsystem. For convenience, the present application describes an electronic device with a loosely coupled

audio subsystem **301**. It will be understood, however, that embodiments of the present invention also apply to a device with a loosely coupled video subsystem.

[0058] Turning now to FIG. **4**, a method for processing music audio in accordance with an embodiment of the present invention is depicted. The described embodiment includes two parallel processes, process **400** and process **401**, which are substantially independent from one another. Process **400** includes the processing steps carried out by the host subsystem **300**, while process **401** includes the processing steps carried out by the audio subsystem **301**.

[0059] Process **400** begins at step **402**, in which the user initiates the playing of an audio track. The playing of the audio track may be initiated by the selection of a particular music or audio/video file or may be initiated by the selection of a particular Internet web page, for example.

[0060] At step **404**, the CPU **304** reads a large block of audio data from storage device (e.g., **336**) and writes the data into memory, such as the volatile memory **338**. The large block of audio data may include several minutes of audio data made up of a single audio track, several audio tracks or even part of an audio track. Additionally, the audio data may originate from a wide variety of sources. For example, audio data may originate from a storage device such as the storage memory **336**, or may stream from the Internet via the Internet communications device **316**. After reading the large block of data (e.g., from non-volatile storage **336**) and writing the data into memory, the CPU **304** creates DMA transfer instructions in volatile memory **338** which provides DMA controller **302** with a description of the block of audio data, sends the DMA transfer instructions to DMA controller **302**, and initiates a DMA transfer.

[0061] Next, at step **406**, the CPU **304** enters into a low power state. Those of ordinary skill in the art will recognize several known methods for achieving a low power state. For example, the CPU **304** may switch off some or all of its internal circuitry by electrically decoupling the circuitry from the main power source. Alternatively, some or all of the CPU **304** may stop its clocks using a clock gating technique, which will be known to those of ordinary skill in the art. During step **406**, the CPU **304** may also power down various other electronic components within the electronic device **100** that are not used for playing the selected audio. In some embodiments, at least one data channel within the CPU **304**, such as an interrupt channel, remains active so that the CPU **304** can be triggered to resume normal operation through the data channel. In this way, the CPU **304** may be triggered to resume normal operation upon detection of a certain event, such as the initiation of an incoming or outgoing phone call, for example.

[0062] Next, at step **408**, while the CPU **304** remains in a low power state, the main DMA controller **302** transfers audio data from the volatile memory **338** to the audio subsystem **301** via the subsystem interface **320** in accordance with the DMA transfer instructions. The main DMA controller **302** may be configured to transfer as much audio data as the RAM in the subsystem interface **320** can hold, which may be up to several seconds worth.

[0063] Next, at step **410**, the main DMA controller **302** sends a signal to the Audio DSP **330** indicating that data is available in the subsystem interface **320**. The sending of this signal, or handshake, triggers the parallel process **401**, wherein the audio DSP **330** processes the audio data independently of the host subsystem **300**, which will be described further below.

[0064] Next, process **400** advances to step **412**, wherein both the main DMA controller **302** and the volatile memory **338** enter a lower power state. As with the CPU **304**, the low power state of the main DMA controller **302** may be implemented by electrically decoupling the main DMA controller **302** from its power supply, through clock gating, or by any other power-saving technique known by those of ordinary skill in the art. If any portion of the audio to be played is still in the volatile memory **338**, waiting to be transferred, the low power state of the volatile memory **338** is implemented by any technique, which preserves the data contained in volatile memory. For example, if the volatile memory **338** is implemented using dynamic RAM (DRAM) technology, then volatile memory **338** may be placed into a self-refresh mode.

[0065] At this time, unless a parallel task is being carried out by the CPU **304**, the audio subsystem **301** is substantially the only component within the electronic device **100** that is fully powered. As will be discussed in relation to process **401**, the audio subsystem **301** may continue to draw audio data from the subsystem interface **320** independently of the host subsystem **300** and process **400**. The host subsystem **300** may, therefore, power up and send new audio data to the subsystem interface **320** before the subsystem interface **320** runs out of audio data.

[0066] Accordingly, at step **414**, a determination is made as to whether the audio data stored in the subsystem interface **320** has fallen below a specified threshold. If the audio data is not below the specified threshold, the main DMA controller **302** remains in the low power state, as indicated at step **416**. If however, the audio data is below the specified threshold, a process is initiated by which the next portion of the selected audio track is loaded into the subsystem interface **320**. In some embodiments, step **414** is executed periodically after a specified amount of data has been transferred from the subsystem interface **320** to the audio DSP **330**.

[0067] After the audio data stored in the subsystem interface **320** falls below the threshold, the process advances to step **418**, at which stage the subsystem interface **320** sends a DMA request to the main DMA controller **302**, causing the main DMA controller **302** to power up and resume normal operation. Next, at step **420**, a determination is made as to whether the main DMA controller **302** has reached the end of the DMA transfer instructions. If the main DMA controller **302** is not at the end of the DMA transfer instructions, process **400** then advances to step **408**, in which case the main DMA controller **302** transfers more audio data to the subsystem interface **320**, sends a handshake signal to the audio DSP **330**, and goes back into low power state (steps **408**, **410** and **412**). If the main DMA controller **302** is at the end of the descriptor, this indicates that all of the audio data stored in host memory by the CPU **304** at step **404** has been transferred to the audio subsystem **301**. Therefore, if the main DMA controller **302** has reached the end of the DMA transfer instructions, process **400** advances to step **422** to begin the process of loading another block of audio data.

[0068] At step **422**, the main DMA controller **302** sends an interrupt command to the CPU **304**, thereby causing the CPU **304** to power up and resume normal operation. Next, at step **404**, the CPU **304** repeats the process detailed above. Namely, the CPU **304** writes another large block of audio data into memory, creates DMA transfer instructions in volatile

memory **338**, initiates a DMA transfer (step **404**) and drops back into a low power state (step **406**). In embodiments of the present invention, the new block of audio data may be the remainder of a particular song that was selected by the user, or alternatively, the new audio data may be from a new song, such as for example, the next song stored in memory, or the next song in a list of songs specified, in some way, by the user.

[0069] Turning now to process **401**, the processing of the audio data within the audio subsystem **301** will be described. Process **401** begins at step **424**, wherein the audio DSP **330** waits for audio data to become available at the subsystem interface. The handshake signal sent by the main DMA controller **302** at step **410** triggers process **401** to advance from step **424** to step **426**.

[0070] At step **426**, the audio DSP **330** moves the audio data from the subsystem interface **320** to the audio DSP **330** memory, such as the input buffer **329**. In some embodiments, as will be explained further below, the data transfer may not occur immediately if the audio DSP **330** is busy processing a higher priority task, such as processing and routing of real-time telephone audio. Otherwise, the audio data transfer will occur as soon as the subsystem interface **320** contains a specified amount of audio data.

[0071] Next, at step **428** the audio data transferred to the input buffer **329** of the audio DSP **330** is processed by the core processor **333** of the audio DSP **330**, such as by decoding, equalizing and/or mixing the audio data. For example, the audio DSP **330** will typically deco the audio data to convert the audio data into a format recognized by the CODEC **334**. The decoding process is usually necessary because, in some embodiments, the audio data is transferred to the audio subsystem **301** in a compressed format and must, therefore, be decompressed before being sent to the CODEC **334**. For another example, the audio DSP **330** may also have to equalize the audio data. The equalization process may be necessary to correct for signal distortion introduced by CODEC **334**, microphone **110**, or speaker **111**. For yet another example, the audio DSP **330** may mix two audio data streams together before sending them to the CODEC **334**. The mixing process provides a means of incorporating a wide variety of audio features into the electronic device **100**. For example, interface sounds may be sent by the CPU **304** and mixed with playing music, or audio may be faded smoothly between music tracks. Additionally, because the telephone audio and music audio are both handled by the audio subsystem **301**, various audio effects, which combine telephone and music audio, may be realized. For example, in one embodiment, music and telephone audio may be mixed to create a smooth fading between the music and telephone audio upon the initiation of a phone call. In another embodiment, music and telephone audio may be mixed to create background music that plays at a lower volume throughout a telephone conversation.

[0072] As stated above, the audio data may not be immediately processed if a higher priority task is currently using the core processor **333** of the audio DSP **330**. Consequently, if the input buffer **329** of the audio DSP **330** becomes full, the subsystem interface **320** will stop sending audio data to the audio DSP **330**, resuming only when the input buffer **329** can handle new data. As stated above, embodiments of the present invention include scheduling hardware and scheduling software running in the program memory of the audio DSP **330** that selects which task gets processed at any time, given the assigned priority of the task. When the scheduler selects the audio data for processing step **428** may execute. The playing of audio data may, therefore, pause at step **428** while a higher priority task is completed. For example, if an incoming call is initiated while an audio track is playing, process **401** will pause at step **428**, resuming when the phone call has ended.

[0073] Next, at step **430**, the audio DSP **330** stores the processed audio data in audio output buffer **331** and routes the processed audio data from the output buffer **331** to the CODEC **334**. The CODEC **334**, as discussed above, then converts the digital audio data into an analog signal and sends the analog audio signal to an output device such as a speaker or headphone. Alternatively, depending on the type of audio and/or the user's selection, the audio DSP **330** may send the processed audio to a peripheral audio device other than the CODEC **334**. For example, the audio DSP **330** may route data to the audio/video interface **326** or an SPDIF interface.

[0074] In some embodiments of the present invention, steps **424**, **426**, **428** and **430** repeat until all of the audio data transferred to the subsystem interface **320** is processed and played, i.e. routed to the output device. It should be noted that, in the presently described embodiment, audio data sent to the audio subsystem **301** does not have access to a return path back to the host subsystem **300**; therefore, audio data sent to the audio subsystem is no longer visible to the host subsystem **300**, including the CPU **304**. Furthermore, process **400** may repeat until all of the audio data selected by the user has been processed by the audio subsystem **301** and played, or until the process has been cancelled by the user.

[0075] Turning now to FIG. **5**, a method of processing telephone audio in accordance with an embodiment of the present invention is depicted. Process **500** starts at step **502** with the initiation of a telephone call. The telephone call may be an incoming call or an outgoing call initiated by the user. In embodiments of the present invention, step **502** is triggered when the user has committed to making or receiving a telephone call, by either dialing a call or pressing the "answer" button.

[0076] Next, at step **504**, the host subsystem **300** enters a low power mode. The host subsystem **300** may include the CPU **304**, the main DMA controller **302**, the storage memory **336**, the volatile memory **338**, and/or any other component connected to the main bus **326** that is not part of the audio subsystem **301**. In this way, only those components used for the processing of telephone audio are fully powered. As stated above, the low power mode may be implemented using any techniques known on the art, such as clock gating. Additional although process **500** depicts the host subsystem **300** as remaining in low power mode for the duration of the telephone call, the host subsystem **300** or some part thereof, such as, for example, the CPU **304**, may resume normal operation if triggered to do so. For example, if the user selected music audio or a sound clip to play during a telephone conversation, the host subsystem **300** may resume normal operation to deliver the selected audio to the audio subsystem **301**. Additionally, the host subsystem **300** may not go into low power state at all if host subsystem **300** has been configured by the user to carry out a parallel process during the processing of telephone audio.

[0077] Next, at step **506**, it is determined whether the baseband radio **322** and the CODEC **334** are "ready," meaning that they are ready to send and receive audio data. The test for the "ready" condition may be physically implemented by any means known in the art. For example, the CODEC **334** may include an output buffer, which holds data to be sent to the output audio device, and an input buffer, which holds data that

has been received by the audio input device and will be sent to the audio DSP **330** for processing. Similarly, the baseband radio **322** may include an output buffer, which holds outgoing data to be transmitted, and an input buffer, which holds incoming data that has been received by the baseband radio **322** and will be sent to the audio DSP **330** for processing. In an embodiment of the present invention, the "ready" condition may signify that both output buffers contain a specified number of empty memory spaces and that both input buffers contain a specified number of audio samples. If all four of the buffers indicate a "ready" state, then a transfer of data may take place and process **500**, therefore, advances to step **508**. Waiting for all four of the buffers to indicate a "ready" state simplifies subsequent processing, since subsequent processing steps can assume that any input data is available, and space for any output data is available; it is not necessary to check for the presence of input data, or the availability of output buffer space, as the processing proceeds. In other embodiments, the presence of input data and the availability of output buffer space are separately determined by the audio DSP **330** during processing.

[0078] Step **506** prioritizes the processing of real-time telephone audio, while also allowing efficient use of the audio DSP's **330** core processor **333**. As long as telephone audio is waiting to be processed and the telephone related circuitry is capable of handling new data, the audio DSP **330** circuitry will be applied to processing telephone audio. Prioritizing the real-time telephone audio helps to ensure that telephone audio is processed quickly, thereby avoiding delays in telephone audio that may be forbidden by regulations and/or undesirable to the user. There may be short periods of time, however, when the telephone circuitry cannot make use of the audio DSP **330**. This may happen, for example, if the output buffers of the baseband radio **322** or the CODEC **334** are full or close to full, or if the input buffers of the baseband radio **322** or the CODEC **334** are empty or close to empty. Rather than allow the audio DSP **330** to remain idle during these times, embodiments of the present invention include a process by which the audio DSP **330** processes other tasks when the baseband radio **322** or the CODEC **334** are not in a "ready" state. As such, process **500** may branch at step **506**, thereby proceeding to step **520** if either the baseband radio **322** or the CODEC **334** are not in a "ready" state.

[0079] If all four of the buffers indicate a "ready" state, process **500** advances to step **508**. At step **508**, a request is made to the audio DSP **330**. In one embodiment, the request is a DMA request, and the request is implemented by DMA request circuitry that includes a set of four data lines each coupled to one of the four buffers and configured to indicate whether the buffer is in a "ready" state. The four data lines may be further coupled to the input of an "and" gate, with the output of the "and" gate coupled to a DMA request input line included in the audio DSP **330**. In another embodiment, the request is an interrupt request, and the request is implemented by interrupt request circuitry that includes a set of four data lines each coupled to one of the four buffers and configured to indicate whether the buffer is in the "ready" state. The four data lines may be further coupled to the input of an "and" gate, with the output of the "and" gate coupled to an interrupt request input line included in the audio DSP **320**.

[0080] Next, at step **510**, telephone audio data is transferred from the input buffers of the CODEC **334** and the baseband radio **322** to the input buffers **329** of the audio DSP **330**. In one embodiment, the audio DSP **330** includes at least two input buffers, and the transfer of data from the CODEC **334** and the baseband radio **322** occurs simultaneously. In one embodiment, where the request was a DMA request, the transfer would be performed by a DMA controller in response to the DMA request. In another embodiment, where the request was an interrupt request, the transfer would be performed by programmed I/O operations generated by software running on audio DSP **330** in response to the interrupt request.

[0081] Next, at step **512**, telephone audio is taken from the input buffers **329** of audio DSP **330**, processed by the audio DSP **330**, and sent to an output buffer **331** of the audio DSP **330**. Examples of such processing may include decoding or encoding of incoming or outgoing transmissions, equalization of telephone audio and digital mixing of different audio data streams. Those of ordinary skill in the art will recognize methods of carrying out the above described processes.

[0082] Next, at step **514**, the audio DSP **330** may mix other audio samples into the telephone audio. For example, the CPU **304** may cause a user interface sound such as a beeping or ringing sound to be mixed with telephone audio as an indication of another incoming call. For another example, decoded music audio may be mixed with telephone audio, so that decoded music audio plays in the background of the incoming and/or outgoing telephone audio. In order to mix decoded music audio with telephone audio, the sample rate of the music audio may be converted by the audio DSP **330** to match the sample rate of the telephone audio, as will be appreciated by those of ordinary skill in the art.

[0083] Next, at step **516**, telephone audio data is sent to the output buffers of the broadband radio **322** and the CODEC **334**. In the embodiment presently described, the transfer of data to the CODEC **334** and the baseband radio **322** occurs simultaneously. Therefore, according to one embodiment, the audio DSP **330** also includes at least two output buffers **331**. In one embodiment, the transfer would be performed by a DMA controller. In another embodiment, the transfer would be performed by programmed I/O operations generated by software running on audio DSP **330**.

[0084] Next, at step **518**, the baseband radio **322** transmits the outgoing audio data, and the CODEC **334** sends the incoming audio data to an output device, such as a speaker. Those of ordinary skill in the art will recognize techniques for carrying out the processes described in step **518**.

[0085] In embodiments of the present invention, steps **506** through **518** repeat at a rate, which is determined by the rate at which the baseband radio and the codec become "ready," until all of the incoming and outgoing audio data are processed and the telephone call ends. Once the telephone call ends, the host subsystem **300** comes out of low power mode and resumes normal operation. As stated above, the host subsystem **300** may resume normal operation even while a telephone call is ongoing, if triggered to do so. Additionally, the host subsystem **300** may also stay in low power mode after the termination of the telephone call if there is no subsequent task waiting to be processed by the host subsystem **300**.

[0086] Returning to step **506**, as stated above, if one of the four buffers does not indicate a "ready" state, process **500** will advances to step **520**. At step **520**, the audio DSP **320** may perform some other short processing task, such as decoding a segment of audio data that has been transferred from the subsystem interface **320**, or processing user interface sound data sent by the CPU **304** to alert the user of another incoming call or a low battery condition, etc. The processing that takes place at step **520** will be brief enough that the next scheduled

execution of telephone audio processing is not significantly delayed. Because the audio DSP processes data in small task segments, as discussed above, step **520** will finish and process **500** will return to step **506** quickly. The audio data processed during step **520** may eventually be mixed with telephone audio during step **514**.

[0087] Turning now to the enhanced security attributes of the present invention, embodiments of the present invention include techniques for enhancing the security of copyrighted audio through encryption. Examples of such encryption techniques are discussed in the copending and commonly assigned U.S. patent application Ser. No. 12/060,728, filed Apr. 1, 2008, entitled "Central DMA with Arbitrary Processing Functions," which is hereby incorporated by reference in its entirety. Briefly stated, copyrighted audio data loaded into the electronic device **100** may be stored in memory in encrypted form, thereby rendering any unauthorized copies that may be downloaded from the electronic device **100** inoperable. The electronic device **100** is, therefore, equipped with decryption hardware and/or software so that encrypted audio files may be decrypted before playing. Some decryption processes could, however, present an opportunity for a hacker to download the un-encrypted audio file from a memory location in the electronic device **100** such as the internal registers of the CPU **304** or the volatile memory **338**. It is therefore beneficial to use a decryption process in which the decrypted audio data does not appear in a memory location that is accessible to CPU **304**. To achieve this the encryption techniques discussed in U.S. patent application U.S. patent application Ser. No. 12/060,728 cause the decryption of audio data to occur simultaneously with the sending of audio data from memory to the buffers of the target DMA device.

[0088] In embodiments of the present invention, the above-referenced encryption/decryption techniques are employed in the electronic device **100**, to enhance the security of copyright protected material. For example, decryption of encrypted audio data may be performed by the main DMA controller **302** as part of the process of transferring the audio to the subsystem interface **320**. In this way, decrypted audio data appears on the main bus **314** and within the audio subsystem **301**, but not in a memory location to which the CPU **304** has access. The CPU **304** does not have access to the audio sent to the audio subsystem **301**, because embodiments of the present invention are configured to only allow one way transmission of decoded audio data to the audio subsystem **301**. In other words, the audio subsystem **301** will appear to the CPU **304** as an output device coupled to the main bus, to which compressed audio data is sent to be processed and played. This functionality is achieved, in part, by the audio DSP **330**, which not only decompresses compressed audio, but also equalizes, mixes and routes audio data to the CODEC **334**, thereby eliminating the CPU **304** from processes involving the handling of decoded audio data.

[0089] Therefore, in embodiments of the present invention the CPU **304** has limited access to the resources within the audio subsystem **301** including the audio DSP **330**. This limited access is achieved by the design of the subsystem interface **320**. The subsystem interface **320** is configured such that, during operation of the electronic device **100**, the CPU **304** has access only to the host side of the subsystem interface **320**, which, as discussed above, allows CPU **304** to access only a subset of the resources within audio subsystem **301**. For example, in one embodiment, the subsystem interface **320** is configured to allow access to only a portion of the volatile memory included in audio DSP **330**, including input buffer **329** and one or more control and/or status registers. The bulk of the volatile memory included in the audio subsystem **301** is, therefore, not accessible to the CPU **304**. Embodiments of the present invention, therefore, make it difficult for a hacker to create unauthorized copies of copyrighted material, because the CPU **304** does not have access to decrypted audio data.

[0090] Additionally, to inhibit the ability of a hacker to load unauthorized software on the device **10**, the host subsystem **300** may periodically perform an audit of the software loaded in each of the devices coupled to the main bus **300**. Because the audio subsystem **301** does not have access to the main bus **300**, none of the code in the audio subsystem **301** needs to be considered. This saves in processing time required for the audit.

[0091] Although the host subsystem **300** has limited access to the audio subsystem **301**, it may also be necessary for the host CPU **304** to temporarily have broad access to the audio subsystem **301** when the electronic device **100** is initially powered up. This temporary access may allow the CPU **304** to load certain initialization data used by the audio subsystem **301**. For example, the CPU **304** may load the scheduler software that runs on the audio DSP **330** when the electronic device **100** is powered up. Additionally, the CPU may also provide initialization data to other components on the audio bus when the electronic device **100** is powered up. In order to load the audio DSP **330** software and other initialization data, the CPU **304** has temporary broad access, during a brief initialization stage, to the memory address space contained in the audio DSP **330**, the subsystem interface **320**, and any other component to be serviced by the CPU **304** on powering up. However, to maintain the security of decrypted audio, the CPU's **304** access to the internal resources of audio subsystem **301** using the subsystem interface **320** is subsequently restricted after the brief initialization stage.

[0092] To maintain the security of the audio subsystem **301** while still allowing the CPU **304** to load software and initialization data, an embodiment of the present invention includes a security mechanism built into the subsystem interface **320**. The security mechanism allows the subsystem interface **320** to operate in one of two modes: "insecure mode" and "secure mode." In "insecure mode," the CPU **304** has full access to the internal resources of the audio subsystem **301** using subsystem interface **320**. In "secure mode" CPU **304** has restricted access to the internal resources of the audio subsystem **301** using subsystem interface **320**. The subsystem interface **320** is forced into "insecure mode" when the electronic device **100** is powered up, and software can explicity switch the subsystem interface **320** from "insecure mode" to "secure mode", but there is no way (other that powering the electronic device **101** down and up) to return to "insecure mode."

[0093] FIG. **6** depicts the operation of a security mechanism built into the subsystem interface **320**, in accordance with an embodiment of the present invention. Method **600** starts when the electronic device **100** is powered up at step **602**. Immediately upon powering up, the CPU **304** runs trusted code, code that is known to be safe and uncorrupted. An example of trusted code is code that is loaded from read only memory (ROM) located on the same integrated circuit that contains CPU **304**.

[0094] Next, at step **604**, the trusted CPU code loads software into the program memory space of the audio DSP **330**

through the subsystem interface **320**. During step **604**, the CPU **304** may also optionally load any other initialization data or software used by other components in the audio subsystem **301**. During step **604**, the CPU **304** may have unrestricted access to substantially all of the memory address space available on the audio DSP **330**, the subsystem interface **320**, and any other component attached to the audio bus **328**.

[0095] Next, at step **606**, after all initialization data is loaded, the audio subsystem software is started. After the audio subsystem software is started, the initialization path is disabled at step **608**. In one embodiment, disabling the initialization path means switching subsystem interface **320** from "insecure mode" to "secure mode." In one embodiment, the audio DSP **330** itself disables the initialization path according to the software loaded by the CPU **304**. In other embodiments, the initialization path is disabled by the CPU **304**. When the initialization path is disabled, the CPU **304** no longer has unrestricted access to the internal resource of the audio subsystem **301**. For example, after the initialization path is disabled, the CPU **304** may only access the portion of the volatile memory included in audio DSP **330** that includes input buffer **329** and one or more control and/or status registers. Once the initialization path is disabled, an attempt by the CPU **304** to access a restricted memory address simply returns an error. Furthermore, once the initialization path is disabled, it cannot be enabled again, other than by turning the electronic device **100** off and on again, in which case, process **600** repeats.

[0096] While the invention may be susceptible to various modifications and alternative forms, specific embodiments have been shown by way of example in the drawings and have been described in detail herein. However, it should be understood that the invention is not intended to be limited to the particular forms disclosed. Rather, the invention is to cover all modifications, equivalents, and alternatives falling within the spirit and scope of the invention as defined by the following appended claims.

What is claimed is:

1. A method of processing audio data in a hand-held electronic device, comprising:

sending a quantity of audio data from a host subsystem to an electronic storage in an audio subsystem, the quantity being large enough to allow the host subsystem to profitably enter and exit a low power mode;

entering the host subsystem into the low power mode;

processing the audio data stored in the electronic storage of the audio subsystem; and

sending the processed audio data to an output device coupled to the audio subsystem.

2. The method of claim **1**, comprising:

causing the host subsystem to exit the low power mode; and

sending an additional quantity of audio data from the host subsystem to the electronic storage in the audio subsystem, the quantity being large enough to allow the host subsystem to profitably enter and exit the low power state.

3. The method of claim **1**, wherein the quantity of audio data sent from the host subsystem to the electronic storage in the audio subsystem provides approximately ten to thirty seconds worth of audio data.

4. The method of claim **1**, wherein sending the audio data from the host subsystem to the electronic storage in the audio subsystem comprises using a memory controller of the host subsystem.

5. The method of claim **4**, wherein the memory controller comprises a DMA controller.

6. The method of claim **1**, wherein the quantity of audio data represents between at least approximately 10 to 30 seconds of audio data.

7. A method of processing audio data in a hand-held electronic device, comprising:

loading a first block of audio data into a first memory in a host subsystem;

loading a first DMA transfer instruction into a second memory in the host subsystem, wherein the DMA transfer instruction describes the first block of audio data loaded into the first memory;

entering a central processing unit into a low power state;

transferring a first portion of the first block of audio data in the first memory into an audio subsystem according to the first DMA transfer instruction; and

entering a DMA controller into a low power state.

8. The method of claim **7**, comprising:

resuming normal operation of the DMA controller;

transferring a second portion of the first block of audio data in the first memory into the audio subsystem according to the DMA transfer instruction; and

re-entering the DMA controller into the low power state.

9. The method of claim **7**, comprising:

resuming normal operation of the central processing unit;

loading a second block of audio data into the first memory;

loading a second DMA transfer instruction into the second memory, wherein the DMA transfer instruction describes the second block of audio data loaded into the first memory; and

re-entering the central processing unit into the low power state.

10. The method of claim **7**, wherein the first and second memories comprise non-volatile memories.

11. The method of claim **10**, wherein the first and second non-volatile memories are part of the same non-volatile memory device.

12. The method of claim **7**, wherein the first memory comprises one or more data registers of the central processing unit, and wherein the first block of audio data is transferred directly from the data registers of the central processing unit to the audio subsystem based on the first DMA transfer instruction.

13. A digital signal processor, comprising:

a core processor, configured to process audio data;

at least one input buffer coupled to the core processor, the at least one input buffer configured to receive audio data from at least one audio input device;

at least one output buffer coupled to the core processor, the at least one output buffer configured to send processed audio data to at least one audio output device; and

a programmable memory configured to control the routing of small audio data segments from the at least one input buffer to the at least one output buffer.

14. The digital signal processor of claim **13**, wherein the programmable memory is configured to assign a priority level to each of the small audio data segments.

15. The digital signal processor of claim **13**, wherein the programmable memory is configured to control the routing of audio data from the at least one audio input device to the at least one input buffer.

16. The digital signal processor of claim **13**, wherein the programmable memory is configured to control the routing of processed audio data from the at least one output buffer to the at least one audio output device.

17. The digital signal processor of claim **13**, wherein the core processor is configured to mix two or more audio samples; sample rate convert audio data; equalize audio data; compress or decompress audio data; encrypt or decrypt audio data; or some combination thereof.

18. The digital signal processor of claim **13**, wherein the at least one audio input device comprises one or more microphones, a headset, or a combination thereof.

19. The digital signal processor of claim **13**, wherein the at least one audio output device comprises a speaker, a headphone, a headset, or a combination thereof.

20. The digital signal processor of claim **13**, wherein sending the processed audio data to the at least one audio output device comprises first sending the processed audio data to a CODEC, wherein the CODEC converts the processed audio data into analog audio data.

21. A system comprising:

an audio subsystem; and

a host subsystem comprising a processor, a memory controller, a volatile memory, and a non-volatile memory configured to store audio data;

wherein the host processor is configured to load a first block of the audio data from the non-volatile memory to the volatile memory and create a first transfer instruction in the volatile memory, and to enter a low power state after the creation of the first transfer instruction, and wherein the memory controller is configured to transfer a first portion of the first block of audio data from the volatile memory to the audio subsystem in accordance with the first transfer instruction and to enter a lower power state thereafter, wherein the first transfer instruction describes the first block of audio data loaded in the volatile memory.

22. The system of claim **21**, wherein after the transfer of the first portion of the first block audio data, the memory controller is configured to exit the low power state, transfer a second portion of the first block of the audio data in the volatile memory into the audio subsystem according to the first transfer instruction, and re-enter the low power state thereafter.

23. The system of claim **22**, wherein the processor of the host subsystem is configured to exit the low power stage after the entire first block of audio data is transferred to the audio subsystem, load a second block of audio data into from the non-volatile memory into the volatile memory, create a second transfer instruction in the volatile memory, and enter the low power state, wherein the second transfer instruction describes the second block of audio data loaded into the volatile memory.

24. The system of claim **23**, wherein the memory controller is configured to transfer a first portion of the second block of audio data from the volatile memory to the audio subsystem in accordance with the second transfer instruction and to enter a lower power state thereafter.

25. The system of claim **21**, wherein the memory controller comprises a DMA memory controller, and wherein the first transfer instruction comprises a DMA transfer instruction.

26. The system of claim **21**, comprising an initialization path that allows the transmission of a trusted program code from the host subsystem to the audio subsystem, wherein the initialization path configured to be inoperable after the transmission of the trusted program code.

* * * * *