1260
Impedance/Gain-Phase Analyzer

OPERATING MANUAL

12600012_Gmacd/CB

Axion Exhibit 1024
Axion v. Agilent

Solartron is a division of Solartron Group Ltd. Any reference to Schlumberger or Schlumberger Instruments (the name of the company until November 1993) implies no liability on the part of Schlumberger.

Solartron

a division of Solartron Group Ltd

Victoria Road, Farnborough,
Hampshire GU14 7PW, UK.

19©96

Issue CB: January 1996
Solartron Part No. :12600

Solartron
Victoria Road, Farnborough
Hampshire, GU14 7PW England
Telephone: +44 (0)1252 376666
Fax: +44 (0)1252 544981

Solartron
964 Marcon Blvd., Suite 200
Allentown, PA 18103, USA
Telephone: +1 610-264-5034
Fax: +1 610-264-5329

Solartron
37 Rue du Saule Trapu
91882 MASSY, Cedex
France
Telephone: +33 (0)1 69 53 63 53
Fax: +33 (0)1 60 13 37 06

Solartron
Beijing Liasion Office
Room 327 Ya Mao Building
No. 16, Bei Tu Chen Xi Road
Beijing 100101, PR China
Telephone: +86 10-6238 4687
Fax: +86 10-6202-8617

E-mail: solartron@solartron.com
Web: http://www.solartron.com

For details of our agents in other countries, please contact our Farnborough, UK, office.

Solartron pursues a policy of continuous development and product improvement.
The specification in this document may therefore be changed without notice.

12600012_Gmacd/CB

Axion Exhibit 1024
Axion v. Agilent

Solartron
a division of Solartron Group Ltd
Victoria Road, Farnborough
Hampshire GUI4 7PW England
Tel +44 (0) 1252 376666
Fax +44 (0) 1252 543854

DECLARATION OF CONFORMITY

The directives covered by this declaration

CE

73123/EEC Low voltage Equipment Directive, amended by 93/68/EEC

89/336/EEC Electromagnetic Compatibility Directive, amended by 92/31/EEC & 93/68/EEC

Product(s)

1260A Impedance Analyzer

Basis on which conformity is being declared

The product(s) identified above comply with the requirements of the EU directives by meeting the following standards:

BS EN50081-1:1992 Electromagnetic Compatibility - Generic Emission Standard Part 1: Residential, commercial and light industry.

BS EN50082-1:1992 Electromagnetic Compatibility - Generic Immunity Standard Part 1: Residential, commercial and light industry.

EN61010-1:1993 Safety requirements for electrical equipment for measurement, control and laboratory use. Accordingly the CE mark has been applied to this product.

Signed

For and behalf of Solartron, a division of Solartron Group Limited

Authority: **Engineering Manager**

Date: **December 1995**

CERTIFICATE No. FM 1709

REGISTERED IN ENGLAND No.2852989. REGISTERED OFFICE: BYRON HOUSE, CAMBRIDGE BUSINESS PARK, CAMBRIDGE, CB4 4WZ
Approved to BS EN ISO 9001:1994 and BS EN 123000, MOD Registered Company
A Roxboro Group company

NAMAS CALIBRATION Nos. 0011 & 0099

Axion Exhibit 1024
Axion v. Agilent

GENERAL SAFETY PRECAUTIONS

The equipment described in this manual has been designed in accordance with EN6 1010 *'Safety* requirements for electrical equipment for measurement, control and laboratory use', and has been supplied in a safe condition. To avoid injury to an operator or service technician the safety precautions given below, and throughout the manual, must be strictly adhered to, whenever the equipment is operated, serviced or repaired. For specific safety details, please refer to the relevant sections within the manual.

The equipment is designed solely for electronic measurement and should be used for no other purpose. Solartron Instruments accept no responsibility for accidents or damage resulting from any failure to comply with these precautions.

GROUNDING

To minimize the hazard of electrical shock it is essential that the equipment is connected to a protective ground whenever the power supply, measurement or control circuits are connected, even if the equipment is switched off. The protective ground for ac and dc supplies is connected separately.

AC GROUND is connected via the ac supply cord. The cord must be plugged into an ac line outlet with a protective ground contact. When an extension lead is used, this must also contain a ground conductor. Always connect the ac supply cord to the supply outlet before connecting the control and signal cables; and, conversely, always disconnect control and signal cables before disconnecting the ac supply cord. The ac ground connection must have a continuous current rating of 6A, and be capable of taking 25A for a minimum of one minute.

AC SUPPLY VOLTAGE

Never operate the equipment from a line voltage or frequency in excess of that specified. Otherwise, the insulation of internal components may break down and cause excessive leakage currents.

FUSES

Before switching on the equipment check that the fuses accessible from the exterior of the equipment are of the correct rating. The rating of the ac line fuse must be in accordance with the voltage of the ac supply.

Should any fuse continually blow, do not insert a fuse of a higher rating. Switch the equipment off, clearly label it "unserviceable" and inform a service technician.

EXPLOSIVE ATMOSPHERES

NEVER OPERATE the equipment, or any sensors connected to the equipment, in a potentially explosive atmosphere. It is NOT intrinsically safe and could possibly cause an explosion.

Continued overleaf.

Axion Exhibit 1024
Axion v. Agilent

SAFETY PRECAUTIONS *(continued from previous page)*

SAFETY SYMBOLS

For the guidance and protection of the user, the following safety symbols appear on the equipment:

SYMBOL	MEANING
⚠	Refer to operating manual for detailed instructions of use.
⚠	Hazardous voltages.

NOTES, CAUTIONS AND WARNINGS

For the guidance and protection of the user, Notes, Cautions and Warnings appear throughout the manual. The significance of these is as follows:

NOTES	highlight important information for the reader's special attention.
CAUTIONS	guide the reader in avoiding damage to the equipment.
WARNINGS	guide the reader in avoiding a hazard that could cause injury or death.

AVOID UNSAFE EQUIPMENT

The equipment may be unsafe if any of the following statements apply:

- Equipment shows visible damage.
- Equipment has failed to perform an intended operation.
- Equipment has been subjected to prolonged storage under unfavorable conditions.
- Equipment has been subjected to severe physical stress.

If in any doubt as to the serviceability of the equipment, don't use it. Get it properly checked out by a qualified service technician.

LIVE CONDUCTORS

When the equipment is connected to its measurement inputs or supply, the opening of covers or removal of parts could expose live conductors. The equipment must be disconnected from all power and signal sources before it is opened for any adjustment, replacement, maintenance or repair. Adjustments, maintenance or repair, must be done only by qualified personnel, who should refer to the Maintenance Manual.

EQUIPMENT MODIFICATION To avoid introducing safety hazards, never install non-standard parts in the equipment, or make any unauthorized modification. To maintain safety, always return the equipment to Solartron for service and repair.

Axion Exhibit 1024
Axion v. Agilent

1260 OPERATING MANUAL CONTENTS

Chapter 1: Introduction

1.1 Key Features 1.3
1.2 Use of the Manual 1.4
1.3 Specification 1.5

Chapter 2: Installation

2.1 Accessories 2.3
2.2 Safety 2.3
2.2.1 General Safety Precautions 2.3
2.2.2 Grounding 2.4
2.3 Power Supply 2.5
2.3.1 Power Voltage Selector 2.5
2.3.2 Line Fuse 2.5
2.3.3 Power Cable 2.6
2.3.4 Connection Procedure 2.6
2.4 Rack Mounting 2.7
2.4.1 Telescopic Slide Kit (Accuride) 2.7
2.4.2 Rack Dimensions 2.7
2.4.3 Ventilation 2.7
2.4.4 Fitting Telescopic Slide (Accuride) 2.8
2.4.5 FittingTelescopic Slide 2.14

Chapter 3. Getting Started

3.1 Introduction 3.3
3.2 Instrument Keyboard 3.4
3.3 Power-up Status 3.6
3.4 Display 3.6
3.5 Using a Control Menu 3.7
3.6 Making a Simple Measurement 3.9
3.6.1 Preliminaries 3.9
3.6.2 Connecting the Item Under Test 3.10
3.6.3 Setting the Analyzer 3.10
3.6.4 Setting the Generator 3.12
3.6.5 Commanding a Measurement 3.14
3.6.6 Setting the Display 3.14
3.7 Using the Sweep Facility 3.16
3.7.1 Setting the Sweep 3.16
3.7.2 Preparing the History File 3.18
3.7.3 Commanding a Series of Measurements 3.18
3.7.4 Reading the History File 3.19
3.8 Using the Plot Facility 3.21
3.8.1 Making a Bode Plot of File Data 3.2
3.8.2 Making a Nyquist Plot of File Data 3.22

Chapter 4: Menu Summary

Menu Summary of:

GENERATOR 4.3
ANALYZER 4.3
SWEEP 4.4
DISPLAY 4.5
PLOTTER 4.5
PLOTTER AXES 4.6
DATA OUTPUT 4.6
SCALE/LIMITS 4.7
VIEW FILE 4.8
VERNIER 4.8
STATUS 4.8
STORE/RECALL 4.9
LEARN PROGRAM 4.9
SELFTEST 4.9

Chapter 5: Menu Terms

Menu Terms of:

GENERATOR 5.3
ANALYZER 5.6
SWEEP 5.12
DISPLAY 5.15
PLOTTER 5.18
PLOT 5.23
PLOTTER AXES 5.24
DATA OUTPUT 5.27
SCALE/LIMITS 5.31
VIEW FILE 5.37
VERNIER 5.38
STATUS 5.41
STORE/RECALL 5.47
LEARN PROGRAM 5.48
SELFTEST 5.50

Chapter 6: Measurement connections

6.1 Introduction 6.3
6.2 Analyzer Input Configurations 6.3
6.2.1 Single-ended Inputs 6.3
6.2.2 Differential Inputs 6.4
6.3 High Frequency Measurements 6.5
6.4 Equivalent Circuits 6.6
6.5 Basic Connections for In-circuit Impedance Measurements 6.7
6.5.1 Cable Lengths 6.7
6.6 The Test Modules 6.8
6.6.1 12601A Component Test Module 6.8
6.6.2 12603A In-Circuit Test Module 6.10

Axion Exhibit 1024
Axion v. Agilent

Chapter 7: Remote Control

7.1 Introduction 7.3
7.2 GPIB Interface 7.3
7.2.1 GPIB Capability Code 7.3
7.2.2 GPIB Connector 7.3
7.2.3 GPIB Switches 7.4
7.2.4 Output to the GPIB 7.5
7.2.5 Serial Poll/ Parallel Poll: GPIB 7.7
7.2.6 Parallel Poll 7.10
7.2.7 Commands for IEEE 488 Protocol 7.10
7.3 Serial Interface 7.11
7.3.1 Data Handshake 7.11
7.3.2 Echo 7.11
7.3.3 Input Command Terminator and Character Frame 7.11
7.3.4 Serial Interface Connector 7.11
7.3.5 Baud Rate Switches 7.11
7.3.6 Output to Serial Interface 7.12
7.4 Dump Output Format, for RS423 and GPIB 7.14
7.4.1 “Dump” Output 7.14
7.4.2 “'Dump All” Output 7.14
7.4.3 Floating Point Format (“Dump" and “Dump All' Data) 7.15
7.5 Remote/Local Control 7.16
7.5.1 Local Lock-out 7.17
7.5.2 Combined Use of RS423 and GPIB Devices 7.18
7.6 Control Program Examples 7.19
7.6.1 Language Used in Program Examples 7.19
7.6.2 Example: Outputting Readings to the GPI B 7.19
7.6.7 Example: Plotting Results from the History File, Using a Controller 7.20
7.6.4 Example: Outputting the History file to the GPIB 7.20

Chapter 8: Remote Commands

7.1 Introduction 8.2
7.2 Command Syntax 8.2
7.3 Command Swnmary 8.3
Command Index 8.14

Chapter 9: Error Messages

9.1 Introduction 9.2
9.2 Error Code Summary
9.2.1 Group 0: Command Structure 9.3
9.2.2 Group 1: Learnt Program 9.3
9.2.3 Group 2: Combined Parameters 9.4
9.2.4 Group 3: Generator 9.5
9.2.5 Group 4: Learnt Program; History File; Vernier 9.5
9.2.6 Group 5: Missing Modules 9.6
9.2.7 Group 6: Illegal Input/Output 9.6
9.2.8 Group 7: System/Calibration 9.6
9.2.9 Group 8: Measurement Validity 9.7
9.2.10 Group 9: Store/recall 9.8

Chapter 10: Scaling and Limits Checking

10.1 Scaling Facilities 10.3
10.2 Normalising Sweep Measurements 10.3
10.3 Scaling a Measurement 10.5
10.3.1 Checking the Constants Store 10.5
10.3.2 Entering a Scaling Constant 10.6
10.3.3 Checking the Function Store 10.8
10.3.4 Clearing a Scaling Function 10.10
10.3.5 Entering a Scaling Function 10.11
10.3.6 Scaling Function Example 10.12
10.3.7 Applying a Scaling Function 10.19
10.4 The Limits Facility 10.21
10.4.1 Setting the Limits 10.21

Chapter 11: Learnt Programs

11.1 Learnt Program Facilities 11.3
11.1.1 Program Swrage 11.3
11.1.2 Program Keyswitch 11.3
11.2 Checking the Program Memory Space 11.4
11.3 Clearing a Learnt Program 11.5
11.4 Creating a Learnt Program 11.6
11.4.1 Entering the Learn Mode 11.6
11.4.2 Learnt Program Example 11.7
11.5 Executing a Learnt Program 11.11
11.6 Editing a Learnt Program 11.12
11.6.7 Entering the Edit Mode 11.12
11.6.8 Listing of Example Program 11.13
11.6.9 Using the Edit Functions 11.14
11.10 Copying a Learnt Program 11.16
11.7.1 Copy procedure 11.16

Axion Exhibit 1024
Axion v. Agilent

1
Introduction

Section		*Page*
1.1	**Key Features**	**1.3**
1.2	**Use of the Manual**	**1.4**
1.3	**Specification**	**1.5**

Axion Exhibit 1024
Axion v. Agilent

1.1 KEY FEATURES

The 1260 Impedance/Gain-Phase Analyzer uses powerful microprocessor-controlled digital and analog techniques to provide a comprehensive range of impedance and frequency response measuring facilities. These include:

- Single sine drive and analysis of the system or component under test over the frequency range 10μHz to 32MHz.
- Measurement integration, and auto-integration, of the analyzer input, for harmonic and noise rejection.
- Sweep facility, for any one of three measurement variables, *frequency, amplitude,* or *bias*.
- A comprehensive range of voltage and current transfer characteristics, each one available from the original base data, which includes:
  - polar, log polar, and Cartesian co-ordinates of the voltage measurement result,
  - polar and cartesian co-ordinates of current transfer characteristics,
  - polar and cartesian co-ordinates of impedance and admittance,
  - inductance or capacitance values, with resistance, quality factor, or dissipation factor, for series or parallel circuits.
- Plotter output, of immediate or filed data, to a digital plotter on the GPIB.
- Limit check and data reduction facility. Data output can be confined to those results that fall within, or outside, user-defined values.
- Output ports selectable from: RS 423, GPIB, and the History File.
- Result scaling, that includes: a *normalization* facility that separates the desired results from confusing background data; and, for impedance measurements, a *nulling* facility that compensates for stray capacitance and inductance.
- Vernier facility, which allows the drive to be adjusted whilst measurements are being made.
- Learn program facility, which allows the instrument to learn a series of control settings and commands.
- Component sorting, manual or automatic.
- Self test facility.
- Local control from a simplified key panel, or remote control from the GPIB.

Axion Exhibit 1024
Axion v. Agilent

1.2 USE OF THE MANUAL

Chapter 2 Describes how to install the instrument. This procedure should be followed implicitly, to ensure safe and reliable operation of the instrument.

Chapter 3 Introduces .the front panel controls and, by means of simple examples, shows you how to start using the instrument.

Chapter 4 Summarises the control menus. This information, which also appears on a blue pull-out card at the front of the manual, is intended as a memory aid for experienced users.

Chapter 5 Is an encyclopaedia of menu terms and explains the meaning and background of each individual control setting.

Chapter 6 Explains how to connect the instrument to the item under test.

Chapter 7 Gives detailed information on how to control the instrument remotely, from the GPIB. Guidance in the use of RS 423 is given also.

Chapter 8 Remote Commands

Chapter 9 Lists the error messages. Error messages are displayed (and an error code is output to a remote device) when a bad command has been given to the instrument or an unacceptable control condition exists.

Chapter 10 Shows how the measurement results may be scaled and/or limits checked.

Chapter 11 Shows how the instrument may be made to store a series of commands, to be executed later as a *learnt program*.

Axion Exhibit 1024
Axion v. Agilent

1.3 1260 SPECIFICATION

These specifications will apply under any combination of stated operating conditions, such as temperature, humidity and signal type. They are guaranteed (not typical) and valid for one year after calibration.

As part of the production procedure every instrument is thoroughly soak-tested, then autocalibrated to a tolerance better than that specified. Solartron designs and manufactures to BS EN 9001.

Generator

Frequency,

Range:	10μHz to 32MHz	
Resolution:	10μHz to 655.36Hz:	10μHz
	655.36Hz to 6.5536kHz:	100μHz
	6.5536kHz to 65.536kHz:	1mHz
	65.536kHz to 655.36kHz:	10mHz
	655.36kHz to 6.5536MHz:	100mHz
	6.5536MHz to 32MHz:	1Hz
	Error:	±100ppm
	Stability, 24hrs ±1°C	±10ppm

Amplitude,

	Voltage	Current
<10MHz:	0 to 3V	0 to 60mA
<>10MHz	0 to 1V	0 to 20mA
Resolution:	5mV	100μA
Error o/c:	±[5% + 1%/MHz + 5mV]	-
s/c	-	±[5% + 1%/MHz + 100μA]
Distortion:	<2%	<2%

DC Bias,

Range:	±40.95V	±100mA
Resolution:	10mV	200μA
Error o/c:	±[1% + 10mV]	
s/c:	-	±[1% + 200μA]

Sweep,

Types:	frequency (logarithmic or linear)
	amplitude (linear)
	dc bias (linear)
Resolution:	>10000 points frequency
	>200 points amplitude or bias
Control:	up, down, step, hold
Maximum current:	±100mA
Maximum voltage, Hi to Lo:	±46V
Lo to ground:	0.4V
Output impedance, voltage:	50Ω ±1%
current, at <1kHz:	>200kΩ
Lo to ground:	100kΩ <10nF
Connection:	floating, single BNC
Output disable:	contact closure or TTL logic 0
Output is short-circuit proof	

Analysis

Three independent analyzers operating in parallel.

Voltage measurement

Range (rms)	Resolution	Full scale peak input	Common mode rejected
30mV	1μV	45mV	5V
300mV	10μV	500mV	5V
3V	100μV	5V	5V

Input protected to: ±46V

Input configuration

Connection:	Differential, BNC outers floating
	Differential, BNC outers grounded
	Single-ended, BNC outers floating
	Single-ended, BNC outers grounded
Coupling:	dc or ac (-3dB at 1Hz)
Impedance, Hi to outer:	1MΩ ±2%, <35pF
Outer to ground:	10kΩ, 330pF
Common mode rejection (at 1MHz):	>50dB
Cross-channel isolation (at 1MHz)	>100dB
Noise floor (at 1MHz)	-100dBV

Current measurement

Range (rms)	Resolution	Full scale peak input	Input resistance
6μA*	200pA	9μA	50Ω
60μA*	2nA	90μA	50Ω
600μA	20nA	900μA	50Ω
6mA	200nA	10mA	1Ω
60mA**	2A	100mA	1Ω

*For frequencies <1MHz only
**For frequencies >10MHz maximum current 20mA rms

Input protected to: ±250mA

Connnection:	floating, single BNC
Coupling:	dc or ac (-3dB at 1Hz)
Impedance, Outer to ground:	100kΩ, <200pF
Outer floating to:	±0.4V
Integration time:	10ms to 10^5s or auto
Measurement delay:	0 to 10^5

Axion Exhibit 1024
Axion v. Agilent

Limits of Error

Ambient temperature 20 ±10°C, integration time >200ms.
Single ended inputs with 50Ω termination, outer grounded.
Data valid for one year after calibration.

Gain-Phase Measurements

Applies to all ranges at >10% full scale
Specification for V2/V1, or V1/V2.

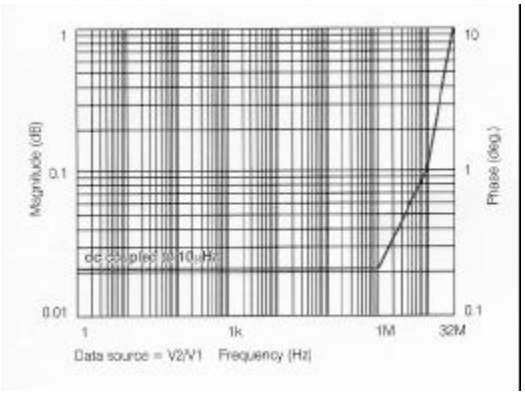

Display

Type:	vacuum fluorescent, dot matrix
Functions, variable:	frequency, amplitude, dc bias
measured:	inputs V1, V2, I, V2/V1, V1/V2, V1/I, I/V1, V2/I, I/V2
Parameters:	magnitude, phase, gain, in-phase, quadrature impedance/admittance, group delay resistance, capacitance, inductance Q-factor, D
Resolution, gain r (dB):	0.001 dB
phase (θ):	0.01deg
others:	5 digit + exponent

Impedance Measurement

Applies for stimulation level of 1V for impedances >50Ω or 20mA for impedances <50Ω, using 12601A.

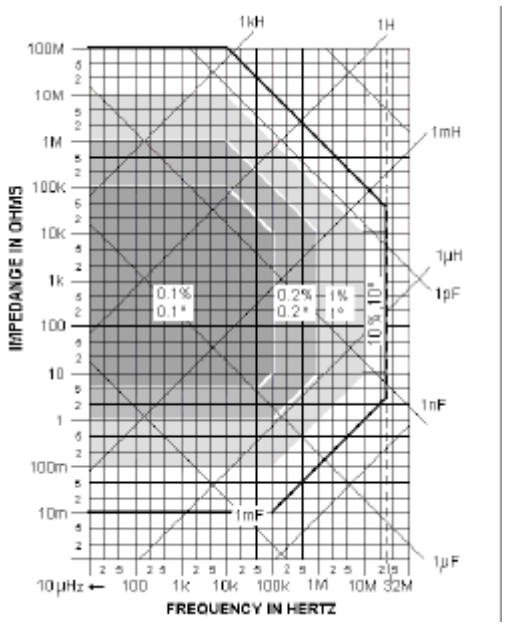

Impedance Ranges

Capacitance: 1pF to 10mF resolution 5 digits
Resistance: 10m to 100M resolution 5 digits
Inductance: 100nH to 1000H resolution 5 digits

Axion Exhibit 1024
Axion v. Agilent

DATA PROCESSING

Scaling: normalization by measured spectrum
scaling by measured point
scaling by a complex constant
integration, differentiation
inclusion of result in a polynomial expansion
deviation from measured point, absolute value or percentage

Math, operators: +, -,*, /, jω, powers, nested brackets
operands: V1, V2, I, complex constants

Statistical analysis: σ, σ^2, count, max., min., mean

PLOTTING

Type: digital,
complies with Hewlett Packard Graphics Language
and Enertec Schlumberger Graphics Language
Interface: IEEE488 in talk only mode
Parameters, independent variable:frequency, amplitude, dc bias
dependent variables: rθ;r(dB) θ;rτ;r(dB)τ;
a jb;Z θ;Y θ;L/C R;R Q/D
X axis item: independent or dependent variable
Y axis item: one, or two, related dependent variables

Axis limits: auto or user defined, logarithmic or linear
Plot size: A3 or A4, or variable in 0.025mm steps
Annotation: full grid or axis markers
parameters description
user entered text (up to 25 characters)

DATA STORE

Type: battery backed random access memory
Size, group delay mode: >280 results
other modes: >400 results
Stored information: frequency, V1, V2, I
generator amplitude and dc bias
error and input range codes
Recall: any display combination,
with processing if required
Storage duration, power off: typically > 1 month

PROGRAM STORAGE

Battery backed random access memory: 9 programs
>300 instructions
9 keyboard set-ups
9 constants

Write protectable permanent memory: 9 programs
>100 instructions
6 keyboard set-ups
9 constants

INTERFACES

Serial output: complies with RS 232 and RS 423
baud rates: 110, 150, 300, 600
1200, 2400, 4800, 9600
Parallel: complies with IEEE488 (1978)

fully programmable talker/listener
switch selectable talk only for plotting/printing

Maximum data rate: 1000bytes/s

Functions implemented: SH1, AH1, T5, TE0, L4
LE0, SR1, RL1, PP2, DC1, C0, DT0

Data format: complies with IEEE754 for
4 byte wide transfers

GENERAL

Line voltage, switch selectable: 90 to 126V, 198 to 252V
ac, 48 to 65Hz
Consumption: 230VA

Environment,
temperature, operating: 0 to 50°C
storage: -40 to 70°C
specification limits: 10 to 30°C

humidity, non-condensing: 95% at 40°C

vibration: tested in accordance with BS EN 60068

Safety: complies with IEC 1010-1 (EN61010-1)

Electromagnetic Compatibility
complies with EN50081-1 and EN50082-1

Dimensions, height: 176mm (6.93ins)
width: 432mm (17ins)
depth: 573mm (22.56ins)
rack size: 4U, 19ins

Weight: 18kg (40lbs)

Axion Exhibit 1024
Axion v. Agilent

2
Installation

Section		*Page*
2.1	**Accessories**	**2.3**
2.2	**Safety**	**2.3**
2.2.1	General *Safety* Precautions	2.3
2.2.2	Grounding	2.4
2.3	**Electromagnetic Compatibility**	**2.4**
2.4	**Power Supply**	**2.5**
2.4.1	Power Voltage Selector	2.5
2.4.2	Line Fuse	2.5
2.4.3	Power Cable	2.6
2.4.4	Connection Procedure	2.6
2.5	**Rack Mounting**	**2.7**
2.5.1	Telescopic Slide Mounting Kit (Accuride)	2.7
2.5.2	Rack Dimensions	2.7
2.5.3	Ventilation	2.7
2.5.4	Fitting Telescopic Slide Mounting Kit (Accuride)	2.8
2.5.5	Fitting Telescopic Slide Mounting Kit (Jonathan)	2.14

Axion Exhibit 1024
Axion v. Agilent

CAUTION SAFETY BONDING TESTS (EN61010, clause 6.5.1.2)

The analyzer input connectors and the generator output connector have driven screens (low terminal), **which should not be subjected to a safety bonding test.** Damage to the internal circuitry may be caused by the 25A test current, even when *low terminal grounded* is selected for single-ended operation.

Axion Exhibit 1024
Axion v. Agilent

2.1 ACCESSORIES

The accessories supplied with the instrument are listed in Table 2.1.

Item	Use	Qty
Fuse, 1A, Slo-blo, 20mmX 5mm	Line fuse for 230V power supply	2
Fuse, 2A, Slo-blo, 20mmX5mm	Line fuse for 115V power supply	2
Fuse, 750mA, Slo-blo, 8mmX6mm	Generator (board 15)	2
Fuse, 2A, Slo-blo, 8mm X6mm	Generator (board 14) and front panel	2
Bracket (rack 'ear')	Rack mounting	2
Slide mounting bar	Rack mounting	1
Screw, M4x 12, countersunk	Rack mounting (slide bar fixing)	4
Key	Keyswitch on rear panel	2
50Ω coaxial cable with BNC connectors, length 1 metre.		3

Table 2.1 - Accessories

An ac power cable, appropriate to the country of destination, is packed with the instrument. If ordered with the instrument, a telescopic rack slide mounting kit (Option 12505B) is also packed.

2.2 SAFETY

The instrument design accords with the EN61010, 'Safety requirements for electrical equipment for measurement, control and laboratory use'.

This operating manual contains information and warnings, which must be followed:

a) to maintain the safe condition of the instrument, and

b) to ensure the safety of the operator.

The principal safety precautions are listed in Section 2.1. Safety precautions are also included, where appropriate, in the operating instructions.

2.2.1 GENERAL SAFETY PRECAUTIONS

1. Before switching on:

   a) Ensure that the power voltage selector is correctly set. (See Section 3.1.)

   b) Ensure that the power cable is connected to the supply in accordance with the colour code. (See Section 3.3.)

   c) Ensure that the power cable plug is connected only to a power outlet that has a protective earth contact. This applies equally if an extension cable is used: **the cable must contain an earth conductor.**

2. To effect grounding at the instrument front panel, the power plug must be inserted before connections are made to measuring and control circuits. The

Axion Exhibit 1024
Axion v. Agilent

power plug or external ground (as appropriate) must remain connected until all measuring and control circuits have been disconnected.

3. Any interruption of the ground connection (inside or outside the instrument) is prohibited.

4. When the instrument is connected to its supply the opening of covers or removal of parts could expose live conductors. The instrument should be disconnected from all voltage sources before it is opened for any adjustment, replacement, maintenance or repair. Adjustments, maintenance or repair of the instrument when it is powered should not be attempted by the user. Consult a Solartron service center if repairs are necessary.

5. Ensure that fuses of the correct rating and type are fitted. The use of makeshift fuses, and short-circuiting of fuse holders, is prohibited.

6. Whenever it is likely that the safety of the instrument has been impaired, it should be made inoperative and secured against any unintended operation. Safety could be impaired if the instrument:

   a) shows visible damage,

   b) fails to perform intended measurements,

   c) has been subjected to prolonged storage under unfavourable conditions,

   d) has been subjected to severe transport stress.

This symbol on the instrument means, “Refer to the operating manual for detailed instructions or safety precautions”.

2.2.2 GROUNDING

For safety, a ground connection is essential whenever measurement and control circuits are connected, even when the instrument is switched off. The instrument is grounded by connecting it to a power outlet or other suitable earthing point. The ground connection should be capable of carrying 25A.

2.3 ELECTROMAGNETIC COMPATIBILITY

When used as described in this manual the instrument meets the requirements of the EMC Directive. (See Specification in Chapter 1.) It must not be operated with the inner metal screens removed and any replacement components must be of the correct type (see Maintenance Manual.)

When conducting tests at high frequencies the equipment being tested and any unscreened test leads may radiate sufficiently to disturb nearby radio receivers. Since the test signal is sinusoidal, any interference is confined to a very narrow band and problems are unlikely to occur. If, however, interference does become a problem then it is the user’s responsibility to reduce emission by the use of suitable screening arrangements.

Axion Exhibit 1024
Axion v. Agilent

2.4 POWER SUPPLY

2.4.1 POWER VOLTAGE SELECTOR

The instrument can be powered from either a 115V or a 230V ac supply. Before connecting the instrument to the supply, proceed as follows:

1. Set the selector switch on the rear panel to correspond with the voltage of the local ac supply, i.e.

   '115V' for supply voltages between 90V and 126V, or

   '230V' for supply voltages between 198V and 252V.

2. Insert a fuse of the correct value into the LINE fuse holder.

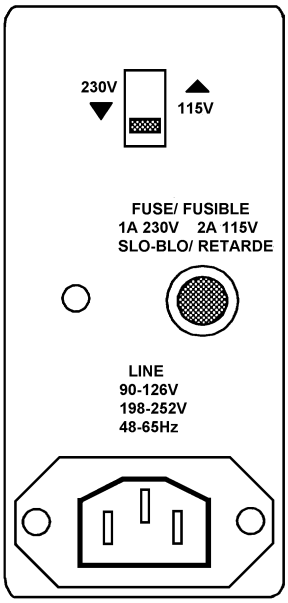

Figure 2.1 - Mains selector panel

2.4.2 LINE FUSE

Only LINE is fused in the instrument. The fuse values for the alternative power voltage settings are:

a) 1A, 'Slo-blo', for the '230V' setting, or

b) 2A, 'Slo-blo', for the '115V' setting.

Replacement fuses must be 20mm X 5mm cartridge type.

Axion Exhibit 1024
Axion v. Agilent

2.4.3 POWER CABLE

The power cable supplied has an IEC socket on one end (which mates with the power input plug on the instrument) and a power plug, compatible with power sockets in the country of destination, on the other end.

This cable should be connected to the user's ac power supply according to the following colour code:

BROWN	=	LINE
BLUE	=	NEUTRAL
GREEN/YELLOW	=	GROUND

An IEC socket and cable other than the one supplied may be used, but it must be correctly wired as shown in Figure 2.2.

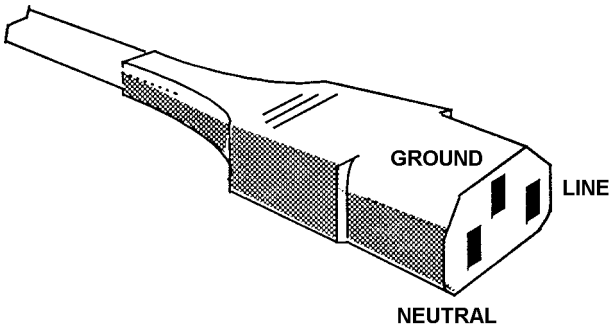

Figure 2.2 - IEC power socket connections

2.4.4 CONNECTION PROCEDURE

1. Before connecting the supply, ensure that the power voltage selector on the rear panel is correctly set (see Section 3.1), and that the LINE fuse is correctly rated (see Section 3.2).
2. Ensure that the POWER switch on the front panel is set to OFF.
3. Connect the power cable.
4. Set the instrument POWER switch to ON.

Axion Exhibit 1024
Axion v. Agilent

2.5 RACK MOUNTING

The instrument can be rack mounted in two ways:

a) on fixed rails, that support the instrument from the underside of the case,

b) on telescopic slides.

Method b) allows easy withdrawal of the instrument for servicing.

With either method, the rack mounting ears included in the accessory kit are substituted for the instrument finisher trims. Screws inserted through the ears and into the rack keep the instrument in place.

Caution

The rack mounting ears must be used only to prevent the instrument sliding out of the rack. They are not designed to support the whole weight of the instrument.

Warning

When the instrument is rack mounted on telescopic slides, ensure that the rack will not tip over when the slides are fully extended.

2.5.1 TELESCOPIC SLIDE MOUNTING KIT (ACCURIDE)

This slide mounting kit is available from Solartron as an optional accessory, and contains:

a) telescopic slide kit, plus fixings (1 off)

b) screws, M4x6 panhead, to fix slide inner members to the mounting bars (12 off)

c) washers, M4 crinkle (12 off)

d) screws, M6 satin chrome, to fix front panel to rack (2 off)

e) washers, M6 plain (2 off)

f) caged nuts, M6, to fix front panel to rack (2 off)

The kit is suitable only for 760mm (30 ins) deep IMHOF IMRAK Series 80 or dimensionally similar cabinets.

2.5.2 RACK DIMENSIONS

The internal rack dimensions required for fitting the instrument are:

a) 610mm (24ins) deep x 485mm (19 ins) wide, for fixed rail mounting, and

b) 760mm (30 ins) deep x 485mm (19 ins) wide, for telescopic slide mounting.

2.5.3 VENTILATION

The instrument has fan-assisted cooling. Air is drawn in through slots under the front panel and expelled from the rear panel.

Ensure a free flow of air by allowing adequate clearance between the instrument, the rack in which it is mounted, and any adjacent racked instruments. If the rack is fitted with front doors, these must have vent holes.

Axion Exhibit 1024
Axion v. Agilent

2.5.4 FITTING TELESCOPIC SLIDE MOUNTING KIT (ACCURIDE)

1. As shown in Figure 2.3, remove the following items from the instrument:

   a) *Finisher Trim,*
   Keep the four M4 X 16 panhead screws and M4 crinkle washers for securing the rack ears.

   b) *Handle and Handle Trim,*

   c) *Side Trim,*
   The side trim is located on the opposite side to the handle. It is normally secured by a pip on the finisher trim and slides out backwards.

   d) *Feet and Tilt Bar.*
   The tilt bar is secured by the two front feet.

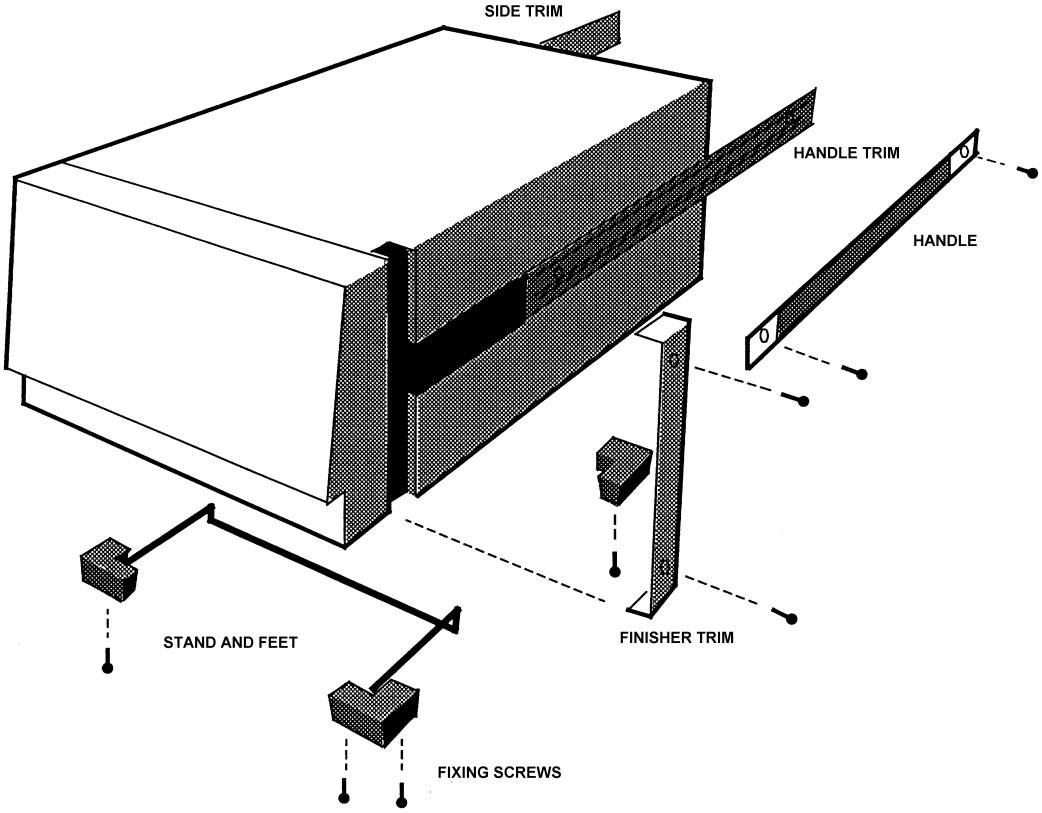

Figure 2.3 - Removal of trims, handle, feet, and tilt bar

Axion Exhibit 1024
Axion v. Agilent

2. As shown in Figure 2.4, fit the following items to the instrument:

   a) *Rack Ears,*
   Fit rack ears in place of the finisher trim, using the same fixings. The ears may be fitted in two ways:

      1. As shown in Figure 2.4.

      2. With their flanges facing the rear of the instrument. This causes the instrument to stand out further in the rack. 'Blind' units (remote control only) can thus be aligned with locally controllable units.

   b) *Slide Mounting Bar*
   The slide mounting bar and fittings are included with the instrument accessories. Screw the mounting bar to the chassis in place of the handle, using the four M4x12 countersunk screws provided. The bar fits correctly only one way round; with the threaded holes nearest the front.

   The corresponding mounting bar on the left-hand side of the instrument is supplied already fitted behind the side trim; it is slightly narrower than the right-hand bar.

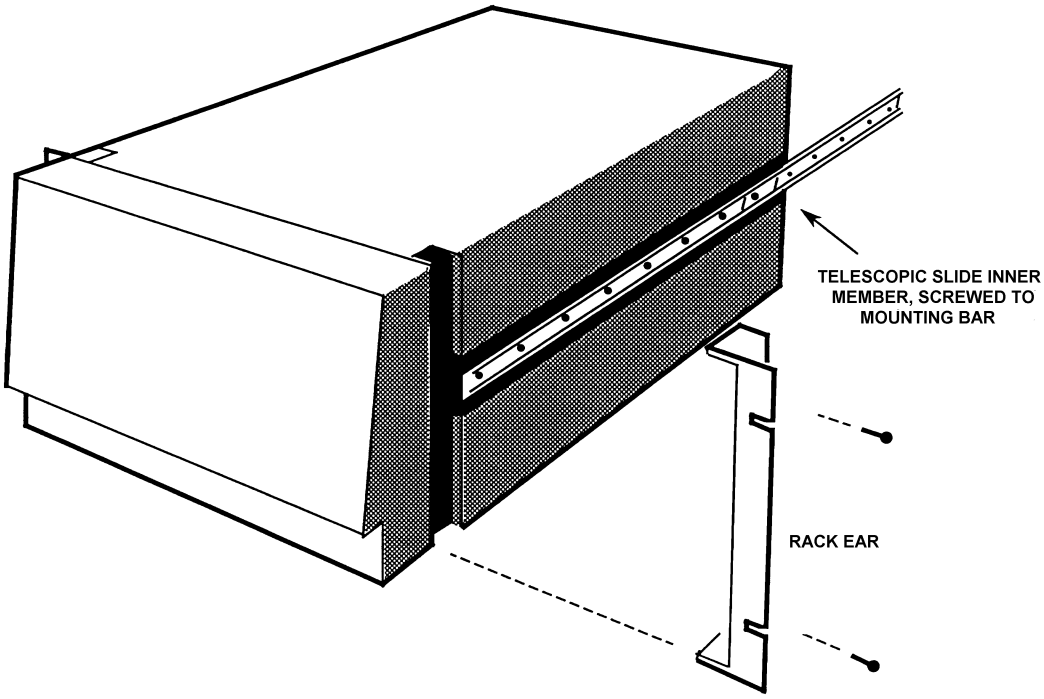

Figure 2.4 - Fitting rack ears and telescopic slide inner members

Axion Exhibit 1024
Axion v. Agilent

c) *Telescopic Slide Inner Members*
The telescopic slides are supplied with inner and outer members slotted together. Slide out the inner member as shown in Figure 2.5, depressing the locking catch at the halfway point.

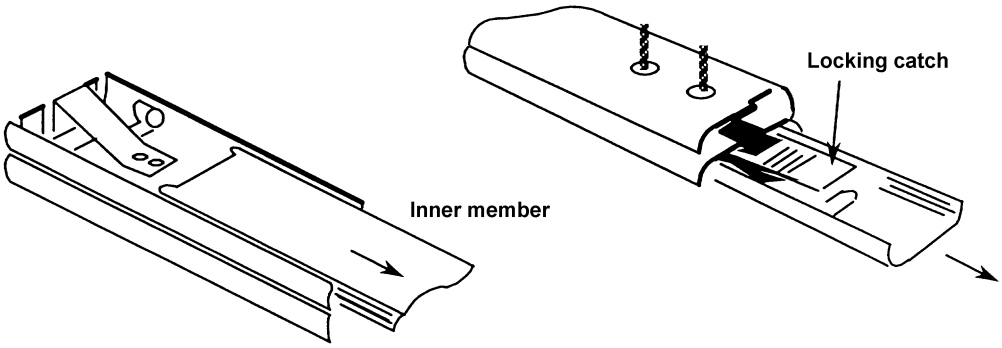

Figure 2.5 - Separating the inner and outer slide members, prior to fixing

Screw the slide inner members to the mounting bars, using the 12 M4x6 panhead screws supplied, 6 each side.

3. Fit the following items to the telescopic slide outer members, as shown in Figures 2.6 and 2.7:

   a) *Adjustable Rear Brackets*
   Fit one rear bracket to each outer member, but do not fully tighten the screws until the instrument is fitted into the rack (Step 6).

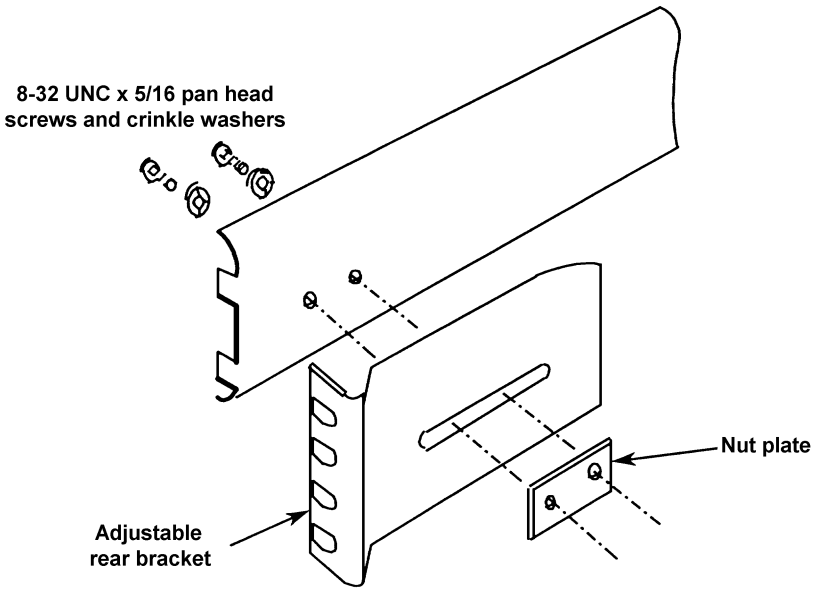

Figure 2.6 - Fitting a rear bracket

Axion Exhibit 1024
Axion v. Agilent

b) *Fixed Front Brackets and Support Brackets*.

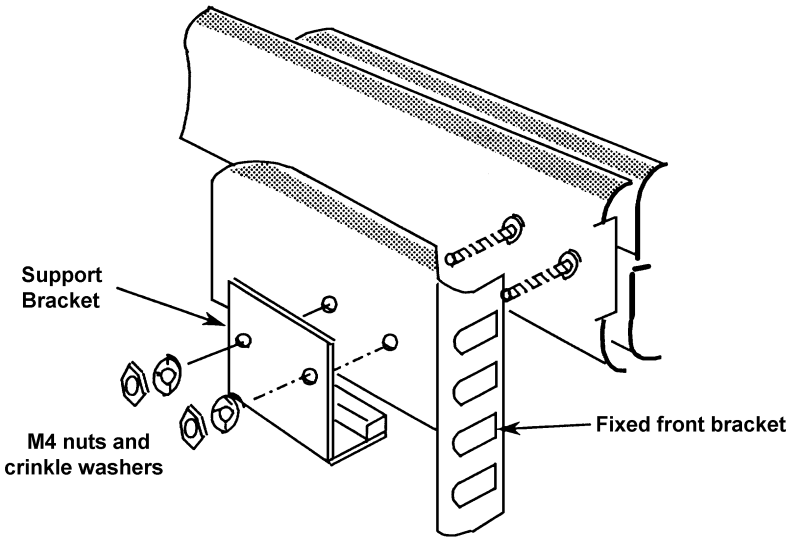

Figure 2.7 - Fitting a front bracket and support bracket

4. Fit the M6 caged nuts for outer slide member and rack ear fixing into the rack, in the positions shown in Figure 2.8. The way to insert and remove caged nuts is shown in the figure detail.

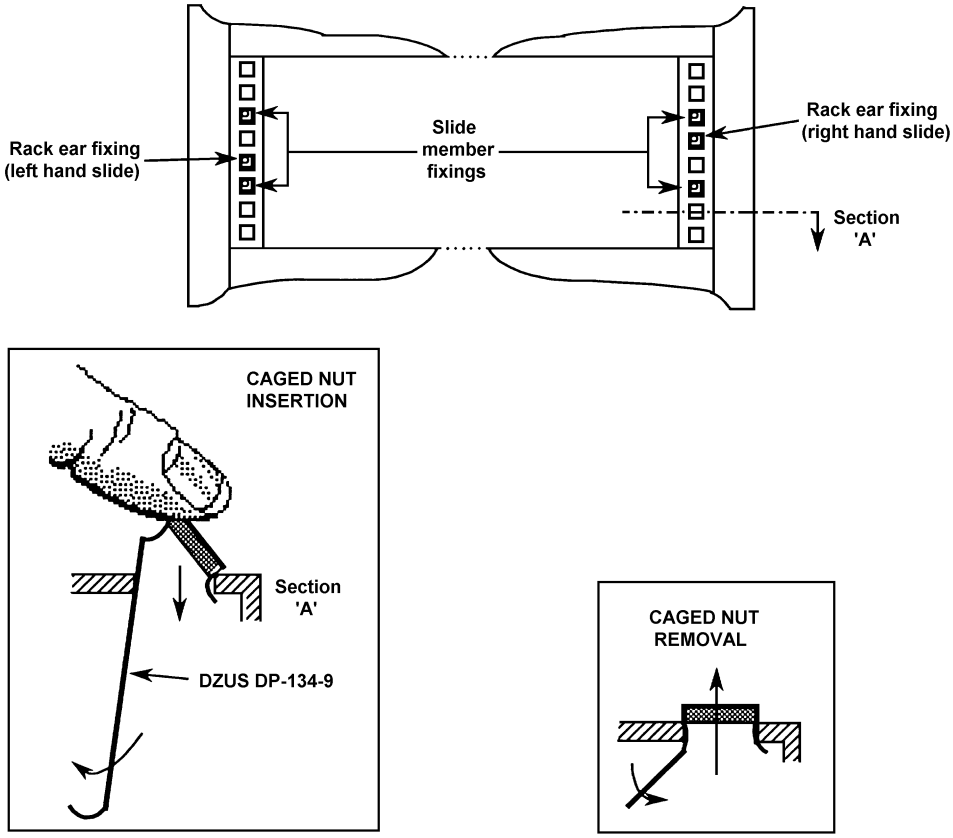

Figure 2.8 - Caged nut insertion in Imrak Series 80 (and similar) cabinets.

Axion Exhibit 1024
Axion v. Agilent

5. Fit the outer slide members to the rack, as shown in Figure 2.9.

   Note that the tapped holes in the nut plate are positioned off-centre to provide maximum lateral adjustment. Fit the plates, as shown, with the holes offset towards the rack exterior.

   Fitting one end of an outer member is made easier if the other end is supported. Hook the bracket at the other end over an M5 screw pushed into the top caged nut.

   Tighten the M5 screws securing the outside slide members until each member is held moderately firmly in the rack, approximately in the centre of its travel. The members must, however, be free to take up any adjustment when the instrument is first fitted into the rack.

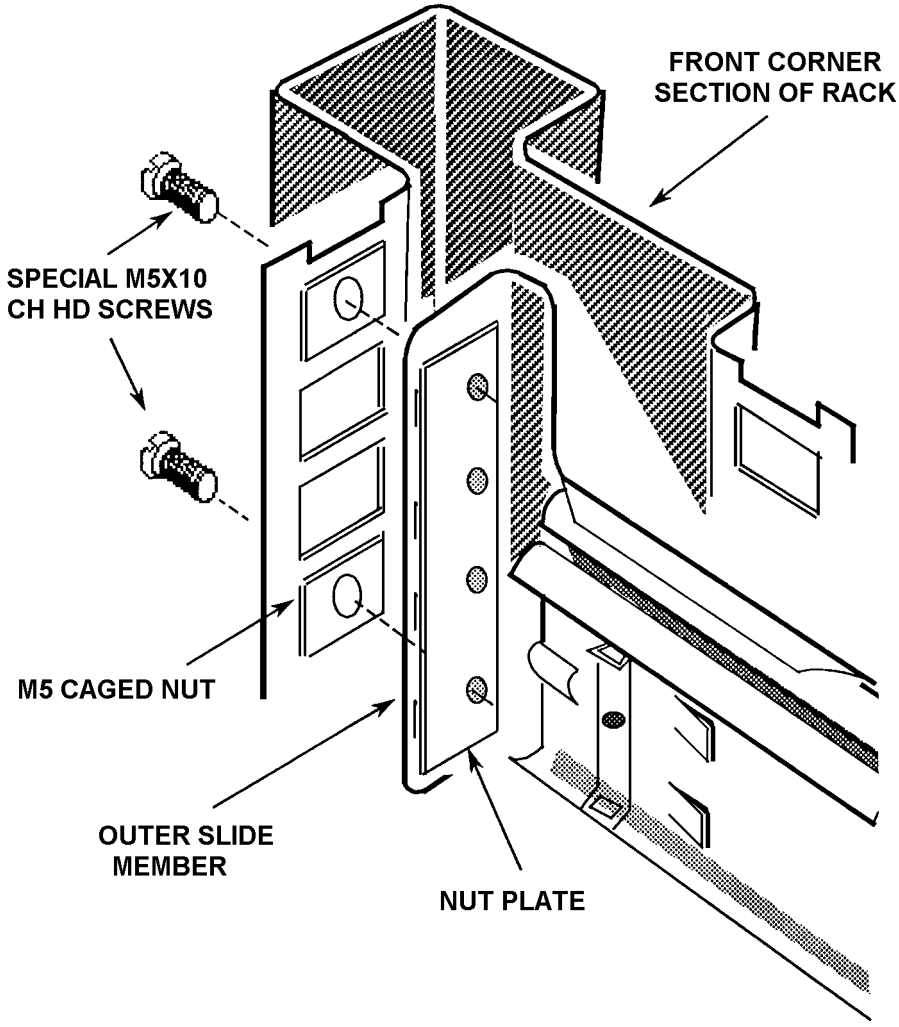

Figure 2.9 - Fitting the outer slide members into the rack

Axion Exhibit 1024
Axion v. Agilent

6. Finally, fit the instrument into the rack, as follows:

   a) Offer the instrument up to the rack and feed the inner telescopic slide members into the outer members, pushing the instrument into the rack until the locking catches engage and lock.

   b) Depress both catches and push the instrument fully into the rack, ensuring that no cables are trapped.

   c) Tighten the screws on the outer slide members in the following order:

      i) the M5 screws securing the rear bracket to the rack,

      ii) the M5 screws securing the front bracket to the rack,

      iii) the 8-32 UNC screws securing the rear bracket to the outer slide member.

Axion Exhibit 1024
Axion v. Agilent

2.5.5 FITTING TELESCOPIC SLIDE MOUNTING KIT (JONATHAN)

1. As shown in Figure 2.10, remove the following items from the unit:

   a) *Finisher Trim*
   Retain the four M4 x 16 panhead screws and M4 crinkle washers for securing the rack ears.

   b) *Handle and Handle Trim*

   c) *Side Trim*
   Located on the opposite side to the handle, the side trim is normally secured by a pip on the finisher trim. The side trim slides out backwards.

   Check that the mounting bar already fitted behind the side trim has the part number 12502019B.

   d) *Case Top and Case Bottom*
   Retain the five screws and washers for securing the replacement case sections.

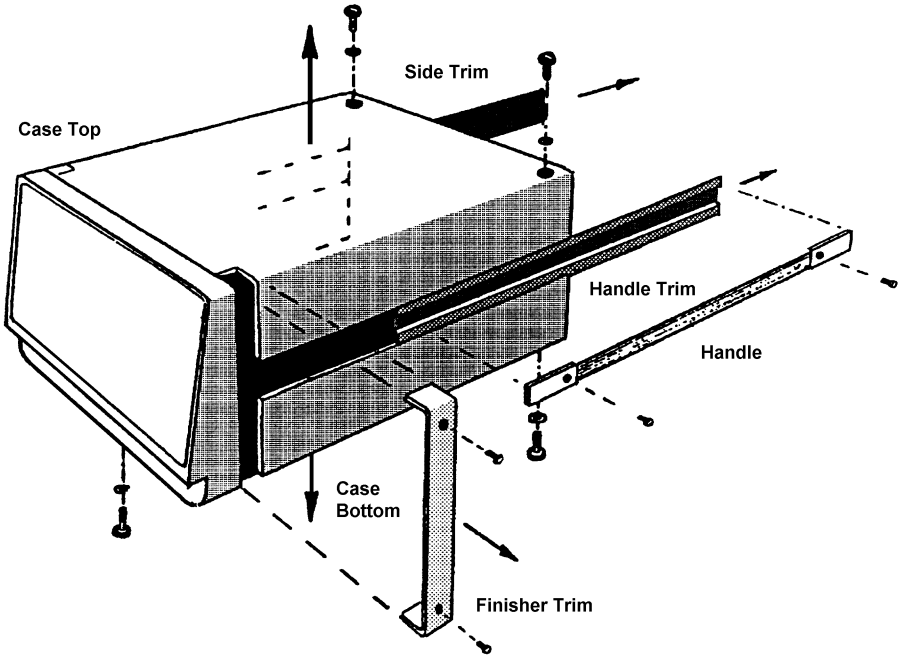

Figure 2.10 - Removal of trims, handle, and top and bottom cases

Axion Exhibit 1024
Axion v. Agilent

2. Fit the self-adhesive feet (four off) to the inside of the replacement case bottom, in the same positions as those in the original case bottom.

3. As shown in Figure 2.11, fit the following items to the instrument:

   a) *Rack Ears*
   Fit the rack ears in place of the finisher trim, using the same fixings. The flanges must face the rear of the instrument.

   b) *Slide Mounting Bar*
   Screw the bar to the chassis, in the position previously occupied by the handle, using the four M4 x 12 countersunk screws provided. The bar fits correctly one way round only, with the threaded holes nearest the front of the instrument.

   c) *Replacement Case Top and Case Bottom*
   Use the original five screws and washers.

4. Fit the Jonathan Telescopic Slide (e.g. the Tru-Glide 110QD-2) and mounting brackets to the instrument, and fit the instrument into the rack. Jonathan slides are not supplied with the instrument. See the manufacturers slide specification sheets for details of fixings, brackets and mounting accessories.

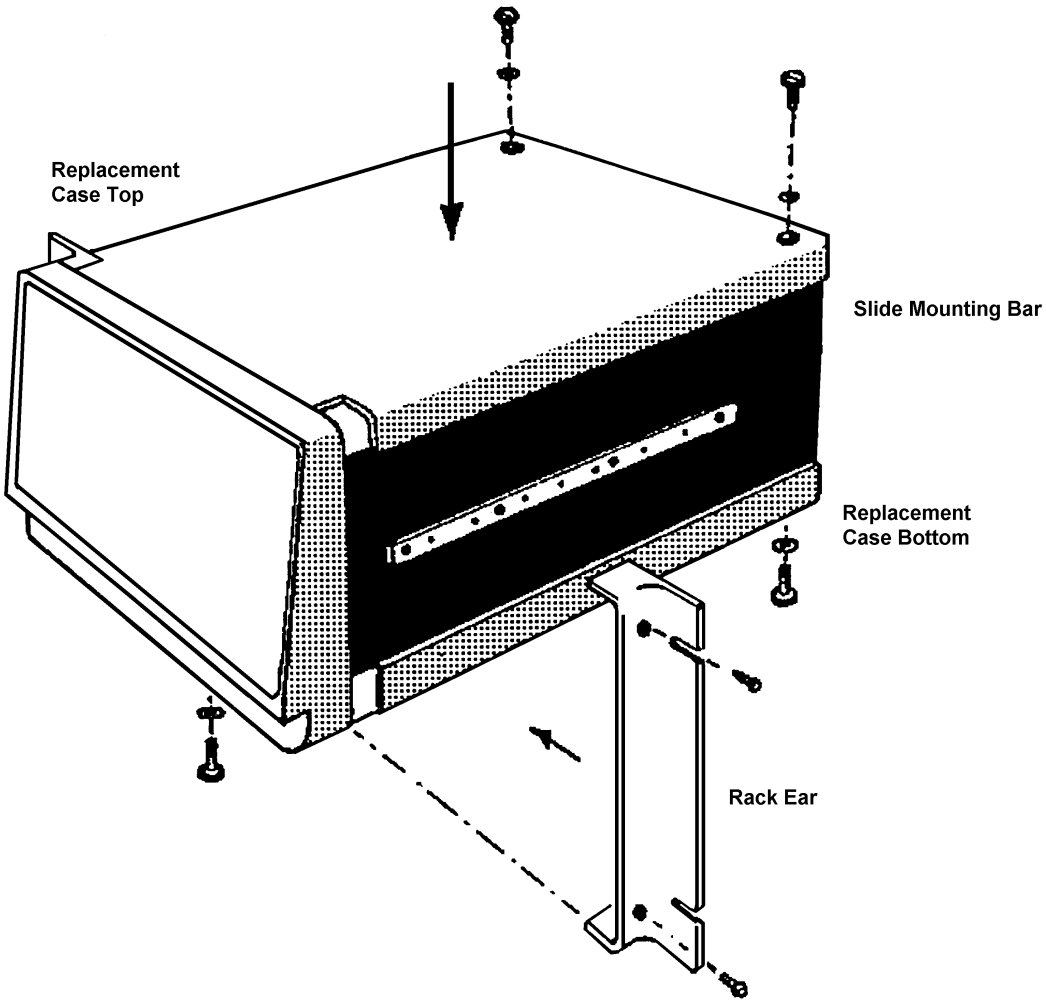

Figure 2.11 - Fitting the rack ears, slide mounting bar, and replacement cases

Axion Exhibit 1024
Axion v. Agilent

Axion Exhibit 1024
Axion v. Agilent

3
Getting Started

Section		*Page*
3.1	**Introduction**	**3.3**
3.2	**Instrument Keyboard**	**3.4**
3.3	**Power-up Status**	**3.6**
3.4	**Display**	**3.6**
3.5	**Using a Control Menu**	**3.7**
3.6	**Making a Simple Measurement**	**3.9**
3.6.1	**Preliminaries**	**3.9**
3.6.2	Connecting the Item Under Test	3.10
3.6.3	Setting the Analyzer	3.10
3.6.4	Setting the Generator	3.12
3.6.5	Commanding a Measurement	3.14
3.6.6	Setting the Display	3.14
3.7	**Using the Sweep Facility**	**3.16**
3.7.1	Setting the Sweep	3.16
3.7.1.1	Effect of Sweep on Generator Loading	3.18
3.7.2	Preparing the History File	3.19
3.7.3	Commanding a Series of Measurements	3.19
3.7.4	Reading the History File	3.19
3.8	**Using the Plot Facility**	**3 21**
3.8.1	Making a Bode Plot of History File Data	3.21
3.8.1.1	Installing the GPIB Plotter	3.21
3.8.1.2	Commanding the Bode Plot	3.22
3.8.2	Making a Nyquist Plot of History File Data	3.22
3.8.2.1	Setting the Display Coordinates	3.22
3.8.2.2	Setting the Plotter Axes	3,23
3.8.2.3	Commanding the Nyquist Plot	3.26

Axion Exhibit 1024
Axion v. Agilent

Axion Exhibit 1024
Axion v. Agilent

3.1 INTRODUCTION

This chapter introduces the local control features of the instrument and shows you how to use them.

The features of the front panel keyboard are described generally in Sections 2 through 5.

Then, three simple examples in Sections 6, 7, and 8 show:

- how to make a simple measurement,
- how to make a sweep, and
- how to plot measurement results.

Whilst following the examples, you may find it useful to refer occasionally to Chapter 5, “Menu Terms”. Pointers to various sections in this chapter are given in Table 3 1, on page 3.5.

Some of the more advanced uses of the instrument are demonstrated in:

- Chapter 10 Measurement scaling and limits checking.
- Chapter 11 Learnt programs.

Axion Exhibit 1024
Axion v. Agilent

3.2 Instrument Keyboard

A logically arranged keyboard and a simple menu structure make the instrument very easy to use.

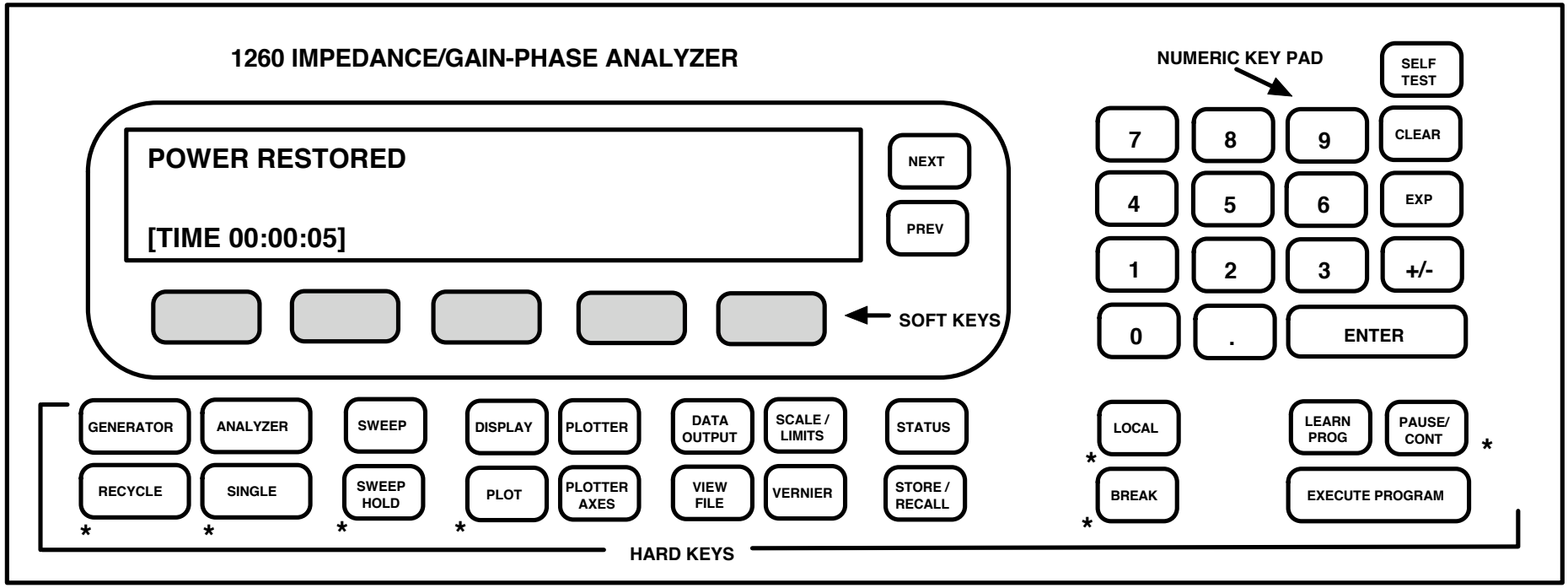

Hard keys guide the user straight to the operation of interest and are used
a) to command an instant action, e.g. SINGLE (make a single measurement) or
b) to select a menu of control functions, from which actions may be commanded or control parameters set.
Instant action keys are indicated with an asterisk
A brief summary of each hard key function is given in Table 3.1, with a reference to the relevant section in Chapter 5 “Menu Terms”.

Soft keys, whose functions are assigned in accordance with a hard key selected menu, allow individual control parameters to be examined and set.
Numeric parameters are entered from the numeric keypad, whilst listed-choice parameters are selected with the NEXT or PREV key.

CLEAR deletes mis-keyed numeric entries, one character at a time, and allows the correct value to be keyed in.

ENTER activates the selected parameter setting.

Axion Exhibit 1024
Axion v. Agilent

Table 3.1 - Hard key assignments

GENERATOR (Chap. 5, Sect. 1)	Selects the Generator menu. This menu defines the drive signal applied to the item under test: constant voltage/current; frequency, amplitude, and bias; amplitude held constant at generator output or at a selected analyzer input (MONITOR).
ANALYZER (Chap. 5 Sect. 2)	Selects the Analysis menu. This menu defines the input parameters of the analyzer, e.g. measurement integration time, delay and mode; input range and coupling.
RECYCLE	Commands repetitive measurements.
SINGLE	Commands a single measurement.
SWEEP (Chap. 5, Sect.3)	Selects the Sweep menu. This menu defines a range of settings through which a selected generator output parameter may be stepped, a new setting being used for each measurement.
SWEEP HOLD	Suspends a sweep. The stepped parameter is held at its present setting, whilst measurements continue. To continue the sweep, press SWEEP HOLD again.
DISPLAY (Chap. 5, Sect. 4)	Selects the Display menu. This menu defines the measurement results to be displayed. (These results are also sent to the output port(s) enabled from the DATA OUTPUT menu).
PLOTTER (Chap. 5 Sect. 5)	Plotter menu. This menu selects: a) the graphics language; b) plot size; c) type of trace, point or vector; d) plot title definition; e) text, grid, axes, on/off.
PLOT (Chap. 5, Sect. 6)	Commands data to be output from the history file to the GPIB plotter.
PLOTTER AXES (Chap. 5, Sect. 7)	Selects the Plotter Axes menu. This menu assigns the displayed data ordinates to the plotter X and Y axes.
DATA OUTPUT (Chap.5, Sect. 8)	Selects the Data Output menu. This menu defines: a) the measurement data output port(s); b) the data to be output, all, fail or pass (ASCII) data, or dump (binary) data; c) port configuration parameters
SCALE/LIMITS (Chap. 5, Sect. 9)	Selects the Scale/limits menu. This menu contains: a) a measurement normalization facility; b) a null function, which compensates for stray inductance and capacitance in the input leads; c) mathematical functions and component sort; d) a measurement limits check.
VIEW FILE (Chap. 5, Sect. 10)	Opens the View File menu. This gives access to the History File.
VERNIER (Chap. 5, Sect. 11)	Opens the Vernier menu. The vernier facility allows the generator output (or plotter scaling) to be adjusted, whether measurements are being made or not.
STATUS (Chap. 5, Sect. 12)	Selects the Status pages. These pages display control information not available under other hard keys.
STORE/RECALL (Chap. 5, Sect. 13)	Selects the Store/recall menu. This provides for storage and subsequent recall of control settings and measurement results.
LOCAL	Returns the instrument to local control (when it is not in local lockout mode).
BREAK	Switches the generator output off, and suspends any present activities (program, sweep, plot etc.)
LEARN PROGRAM (Chap. 5, Sect. 14)	Opens the Learn Program menu. A learnt program is a series of commands and control set-ups that is memorized by the instrument and executed, in order of entry, when an EXECUTE PROGRAM command is given.
PAUSE/CONT	Pause/continue facility for learnt programs, and control of null compensation.
EXEC. PROGRAM	Starts the execution of a selected learnt program
SELF TEST (Chap. 5, Sect. 15)	Selects the Self Test menu. This offers: a) a self-test facility; b) initialization and reset facilities; c) time set facility; d) error beep on/off

Axion Exhibit 1024
Axion v. Agilent

3.3 POWER-UP STATUS

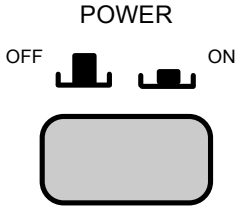

On power-up the instrument is tested automatically and the resulting control status is indicated in a power-up message. This message is important and should be understood before using the instrument. The various messages which may be displayed are:

POWER RESTORED The normal power-up message. This shows that the instrument has correctly remembered the control and measurement data that were in its memory when power was interrupted. The generator output is switched off.

RESET This message may be displayed if a board has been removed from the instrument. All control settings are set to the default state. Stored parameters, learn programs, and history file data are available for recall.

INITIALIZED This message may be displayed if power has been down for a considerable time. All control settings are reset to the default state, and stored parameters, learn programs, and history file data are erased.

A further message may appear with any of the above messages if the instrument needs recalibration:

"75. CAL DATA CORRUPT" is displayed if one copy of the calibration data has been corrupted. The instrument is usable, but should be recalibrated as soon as possible.

"76. RECALIBRATE" is displayed if both copies of calibration data have been corrupted. The instrument should be recalibrated before further use.

3.4 DISPLAY

Control information or measurement results are displayed, in accordance with the operating state of the instrument. Examples of the display format are shown in Section 5 of this chapter and in Chapter 5 "Menu Terms".

If a bad command is given an error message is displayed also. The meaning of each error message is explained in Chapter 9.

Axion Exhibit 1024
Axion v. Agilent

3.5 USING A CONTROL MENU

A few simple steps are all that is necessary to use each control menu. You are guided through these by a clear display of the choices available, shown in brackets. The steps are:

1. Choose the menu by pressing the relevant hard key. A choice of menu page is indicated by **square** brackets. Step through the pages by pressing **NEXT** or **PREV** e.g.

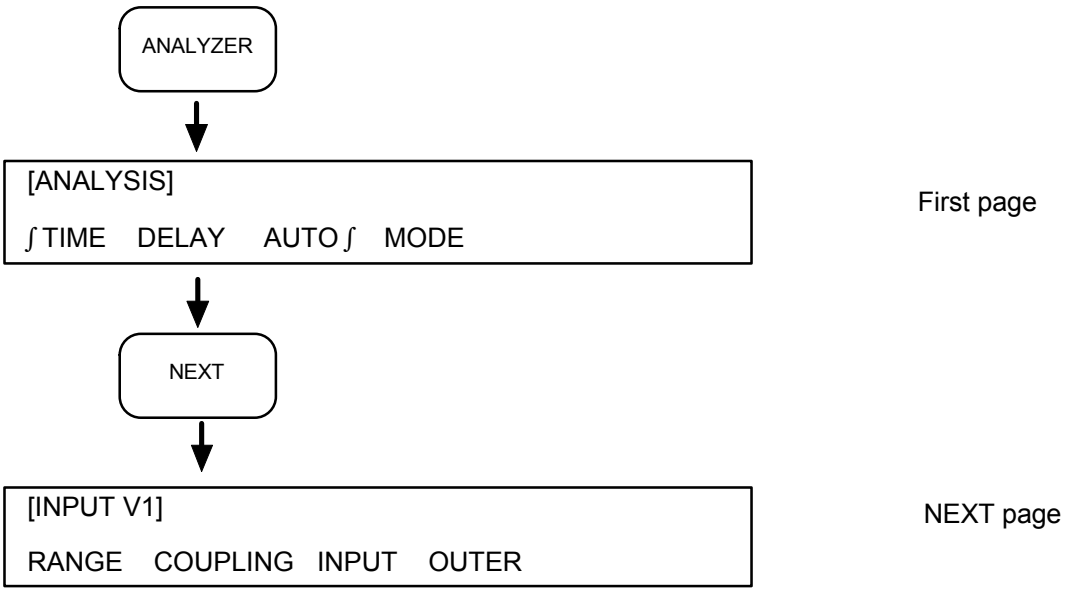

2. Access the parameter of interest by pressing the relevant soft key.
3. If necessary, choose another setting. A setting is either selected from a list of fixed choices or keyed in as a number from the numeric keypad.

   Listed-choice parameter settings are enclosed in square brackets and are selected with **NEXT** or **PREV** e.g.

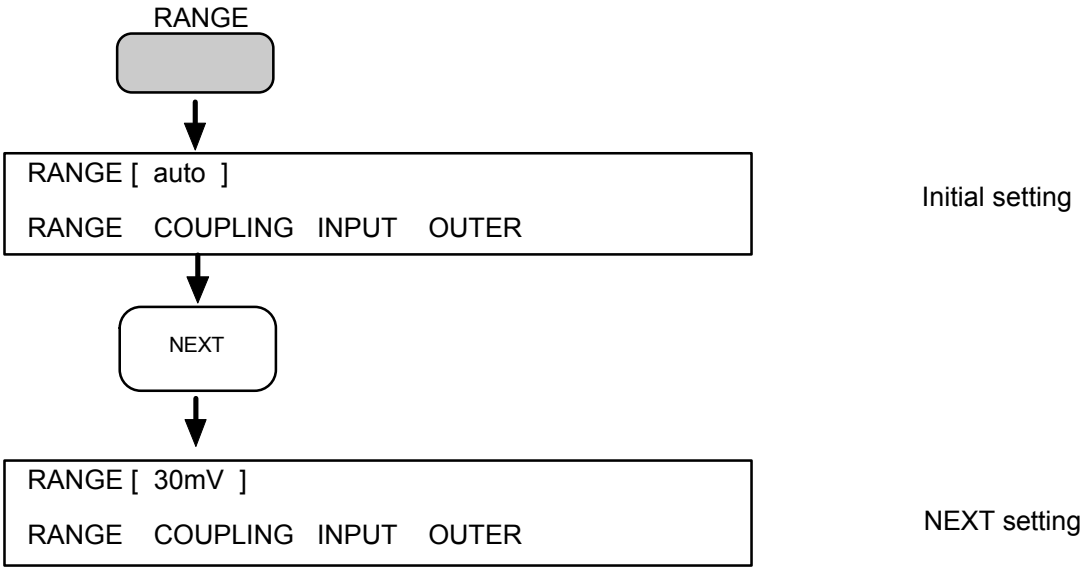

Axion Exhibit 1024
Axion v. Agilent

numeric parameter entries are invited with **round** brackets, e.g.

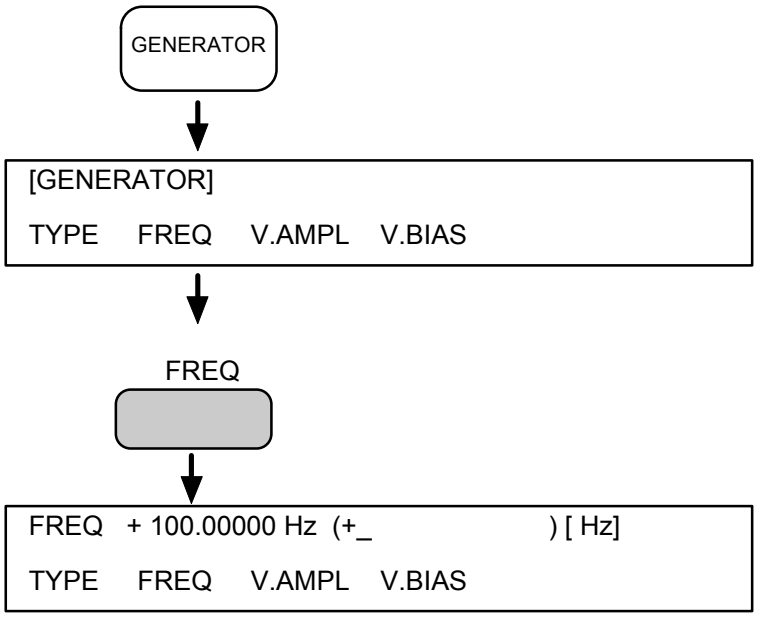

Also displayed is the present parameter value. Numeric values are keyed in from the numeric keypad and appear between the brackets as each number key is pressed. Pressing the CLEAR key deletes the characters in round brackets, one character at a time.

Note that multiples and sub-multiples of the parameter units may often be selected as well, with NEXT or PREV. In the example above this allows frequencies to be entered in μHz, mHz, Hz, kHz, or MHz.

4. **Enter the displayed parameter setting** by pressing the ENTER key. This returns the display to the basic menu to allow other parameters to be accessed. A selected setting must be entered for it to be acted on by the instrument; otherwise the setting last entered (or the default setting) is used.

POINTS TO REMEMBER:

- **Square brackets** enclose one item in a **list** of choices. Select other settings with the NEXT key (down the list) or PREV (up the list). Square brackets may enclose menu page titles, control settings, or units of control settings. Press the ENTER key to update the selection.
- **Round brackets** invite the entry of a **number** from the numeric keypad. Press the ENTER key to update the number.

Axion Exhibit 1024
Axion v. Agilent

3.6 MAKING A SIMPLE MEASUREMENT

In this example the impedance of a simple *C,R* network is measured at a single defined frequency and the results of analysis are displayed.

3.6.1 PRELIMINARIES

1. Ensure that the instrument is correctly installed, as described in Chapter 2.
2. Switch on the power, at source and on the instrument front panel. Check that the "POWER RESTORED" message is displayed. If it is, proceed with the example if it isn't, refer to Section 2 in this Chapter.
3. Reset or initialize the instrument. This sets the. control-parameters to a known state, from which setting up may begin. Before initializing, ensure that you will not be deleting any useful data, or control set-ups. To retain stored data and control set-ups in memory, reset the instrument instead. The procedure is:

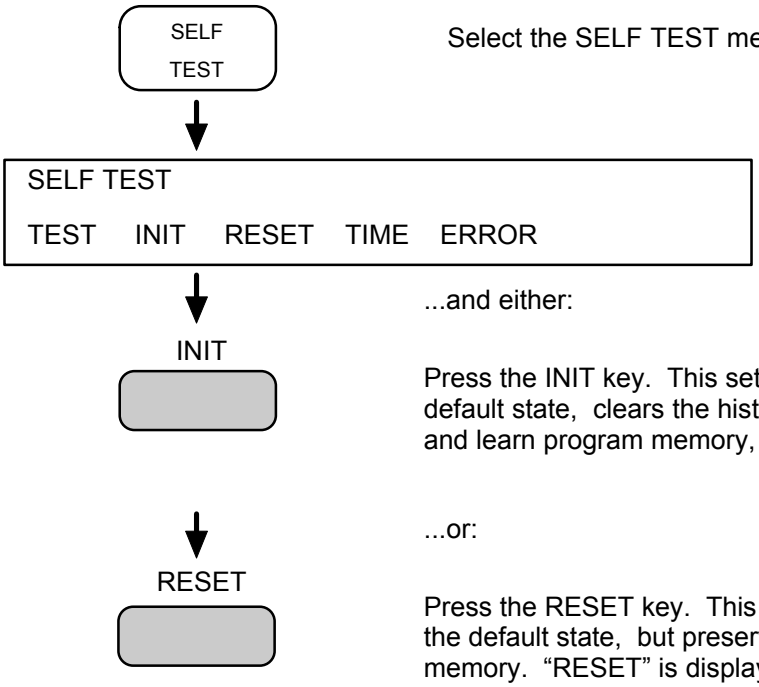

Select the SELF TEST menu....

...and either:

Press the INIT key. This sets all control parameters to the default state, clears the history file, the result/control stores and learn program memory, and displays "INITIALIZED".

...or:

Press the RESET key. This sets all control parameters to the default state, but preserves data and control set-ups in memory. "RESET" is displayed.

Axion Exhibit 1024
Axion v. Agilent

3.6.2 CONNECTING THE ITEM UNDER TEST

Items under test may be connected to the instrument either directly through the front panel terminals or through one of the test modules that fit over the terminals.

The easiest way of connecting the *C,R* network presently under test is through the component test module, as shown in Fig 3.1.

Measurement connections, generally, are described in Chapter 6.

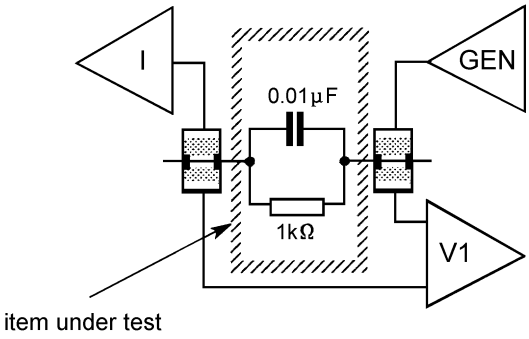

Fig 3.1 - Connections for a simple impedance measurement

To complete the measurement connections the analyzer inputs must be configured to suit the test module. This is done from the ANALYZER menu.

3.6.3 SETTING THE ANALYZER

The analyzer parameters should be set in accordance with the test set-up and the expected test response.

In the present example all the analyzer parameters are left at their default settings (shown in Table 3.2), *with the exception of OUTER for the VOLTAGE 1 input.* This parameter is altered to floating ground, as follows:

ANALYZER

Press the ANALYSER hard key....

[ANALYSIS]

∫TIME DELAY AUTO∫ MODE

... to select the ANALYSIS menu.

NEXT

Then press the NEXT key....

[INPUT V1]

RANGE COUPLING INPUT OUTER

... to select the INPUT V1 menu.

Axion Exhibit 1024
Axion v. Agilent

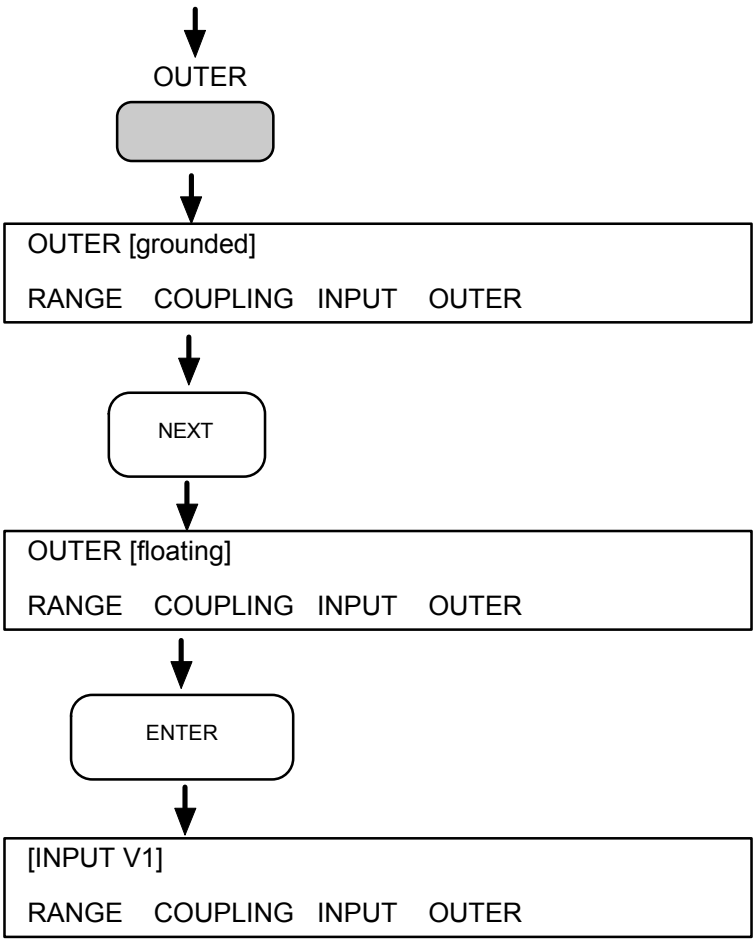

Press the OUTER soft key....

... to display the present OUTER setting (The default setting is [grounded].)

Select the NEXT setting....

... i.e. OUTER [floating]....

... and enter it.

The menu title is displayed to show that entry is complete.

Table 3.2 - Analyzer Default Settings

Parameter	Setting	Characteristics
[ANALYSIS]		
∫ TIME	200ms	Suitable for low noise input.
DELAY	zero secs	Suitable for the item under test.
AUTO ∫	off.	UT has constant low noise input: auto integration not required.
MODE	normal	Suitable for all display coordinates, except r,t and r (dB), t. There is no need for the auto impedance facility, as the form of the circuit is known.
[INPUT V1]		
RANGE	auto	Covers all input voltage ranges.
COUPLING	dc	IUT gives no dc component at voltage 1 input, therefore dc coupling is used for minimum phase shift.
INPUT	differential	Differential input (Hi - Lo).
OUTER	grounded	Screens grounded. (Altered to screens floating in this example.)
[INPUT V2]		Same settings as [INPUT V1].
[INPUT II		
RANGE	auto	Covers all input current ranges.
COUPLING	dc	IUT gives no dc component at CURRENT input, therefore dc coupling is used for minimum phase shift.

Axion Exhibit 1024
Axion v. Agilent

3.6.4 SETTING THE GENERATOR

Set the generator parameters to provide a suitable drive for the item under test (IUT). Remember that the drive specified must satisfy:

- the generator output capability,
- the rating of the JUT, and
- the analyzer input range.

In the present example the IUT is driven at a frequency of 15.9kHz. At this frequency the impedance of the circuit is approximately 707Ω, and a drive amplitude of 1V (applied both to the item under test and to the analyzer VOLTAGE 1 input) develops a drive current of approximately 1.4mA. The drive and expected test response are thus well within the capabilities of the generator and analyzer.

The generator set-up sequence is:

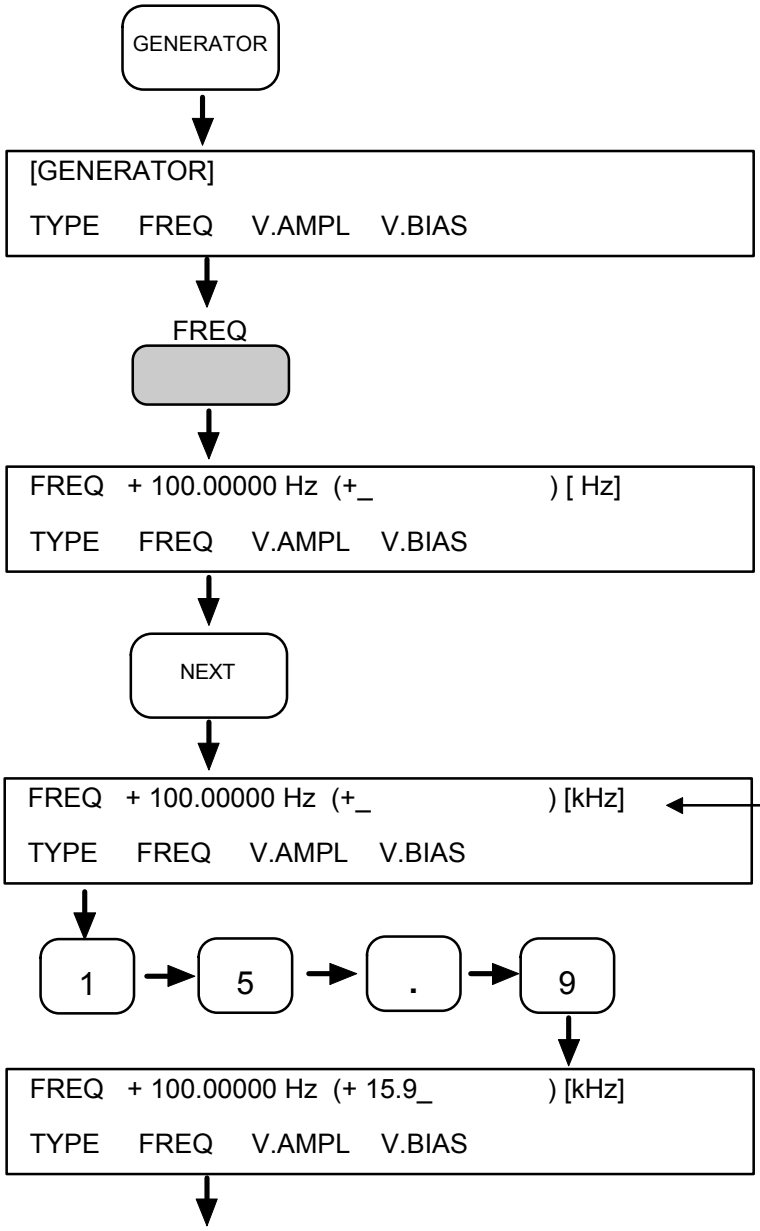

Press the GENERATOR hard key...

...to select the [GENERATOR] menu. The titles of the parameters that can be set up appear over the soft keys.

Press the FREQ soft key...

...to display the present setting of the drive signal frequency. The round brackets invite the entry of a new frequency value.

Select the next frequency units setting...

... which is kHz...

... then key in the frequency value...

(the digits appear in the round brackets)

Axion Exhibit 1024
Axion v. Agilent

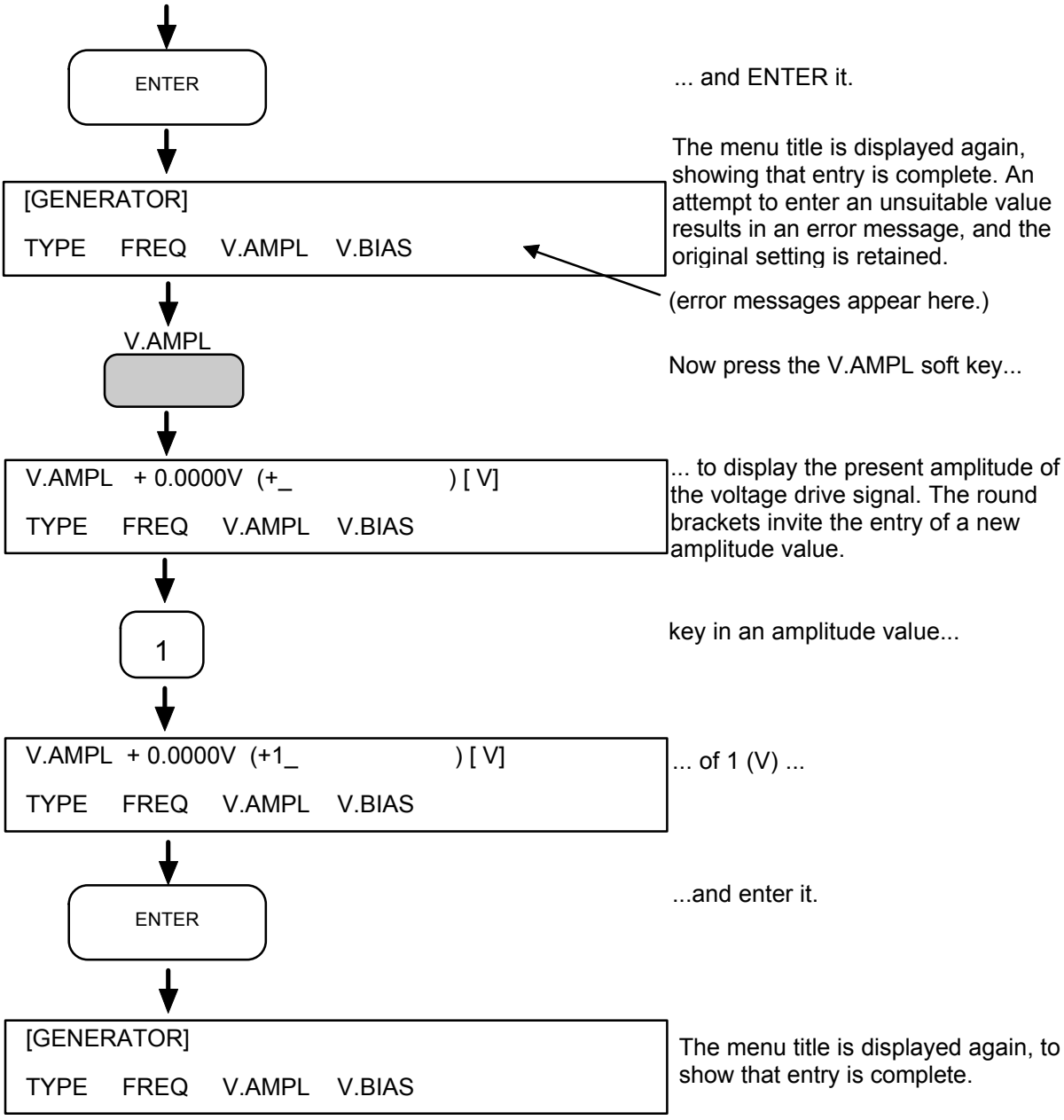

The generator parameters are now set, but the generator output is not applied to the IUT until a measurement is commanded. See next page.

Axion Exhibit 1024
Axion v. Agilent

3.6.5 COMMANDING A MEASUREMENT

Once the generator and analyzer have been set up it is possible to command a measurement and get some sensible results.

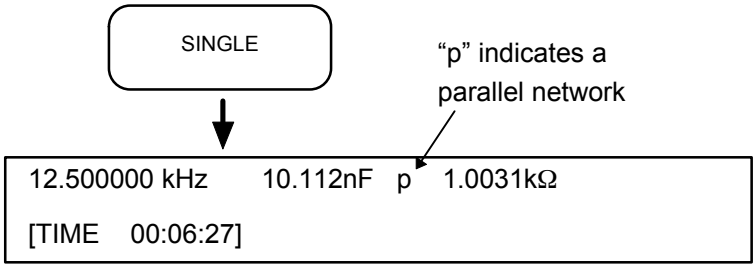

Press the SINGLE key ...

... to command a single measurement

On completion of the single measurement the instrument displays the component values of the parallel *C,R* circuit presently under test. This is the default display. Other measurement sources and coordinates may be selected from the DISPLAY menu.

Note that the generator output is switched on, and stays on, when a measurement is first commanded. BREAK switches the generator output *off.*

3.6.6 SETTING THE DISPLAY

Once a measurement has been made the basic data are stored in memory. From these basic data the instrument is able to compute various results in various formats: you simply select the appropriate result from the DISPLAY menu. This allows the same measurement data to be viewed in many different ways.

The next example, in Section 7, shows you how to use the sweep facility. A series of measurements is made, each one at a different frequency, in preparation for making an impedance plot. As an exercise, use the DISPLAY menu to select the polar coordinates *Z,*θ. (You may, if you wish, do this after the swept measurements are made, but selecting coordinates *Z,*θ now allows you to see the changing impedance results as they occur.) The procedure is:

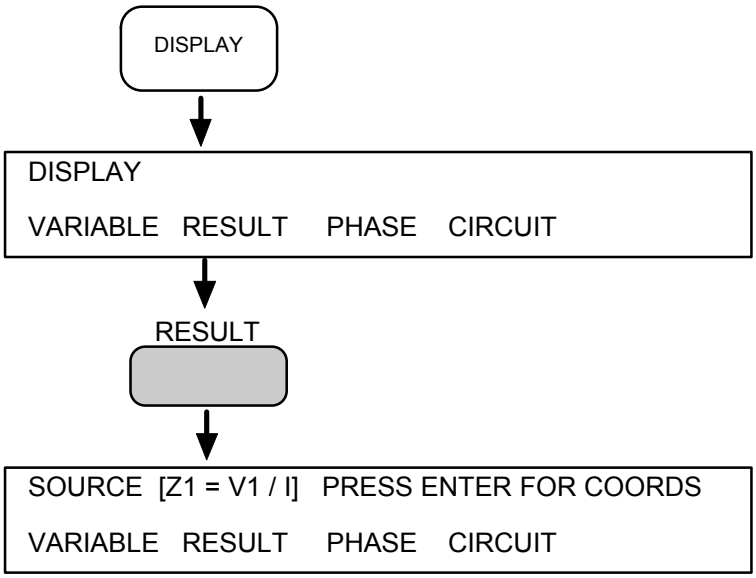

Press the DISPLAY hard key ...

... to select the display menu.

Then press the RESULT soft key...

... to display the present data source.

Z1= V1/I is the source required, so...

Axion Exhibit 1024
Axion v. Agilent

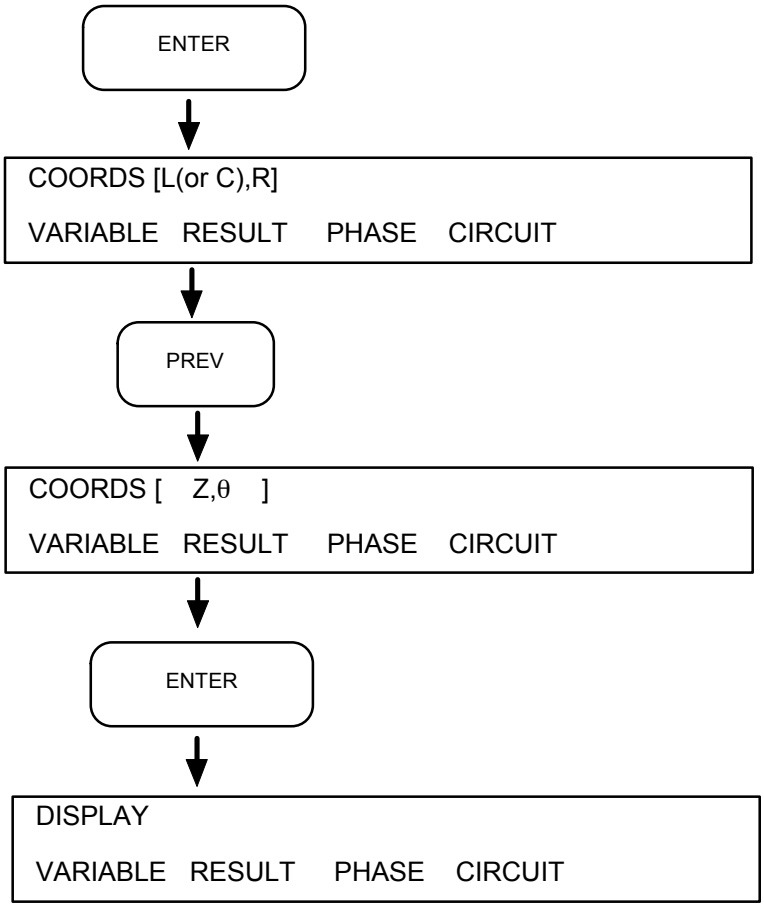

... enter it, to display the present coordinate setting...

... which is for the component values L(or C),R.

Now select the previous setting...

... which is for the polar coordinates of impedance Z, θ

Enter this setting...

...and the menu title is displayed, to show that entry is complete.

Axion Exhibit 1024
Axion v. Agilent

3.7 USING THE SWEEP FACILITY

SWEEP allows any one of the generator output parameters, frequency, amplitude, or bias, to be stepped through a range of settings, a new setting being used for each measurement. The basic data of the series of measurements thus made are held in the history file and may be reviewed with the VIEW FILE facility. A graph can be plotted from the stored data with the PLOT facility (example in Section 8).

In the following example a series of measurements is made of the C,R circuit shown in Fig 3.1, using a frequency sweep. (The settings of the GENERATOR, ANALYZER and DISPLAY menus are the same.) The frequency is swept between the limits 100Hz (F.MIN) and 900kHz (F.MAX). Fifty measurements are made, at logarithmic intervals, going from the minimum to the maximum frequency.

3.7.1 SETTING THE SWEEP

The sweep set-up sequence is:

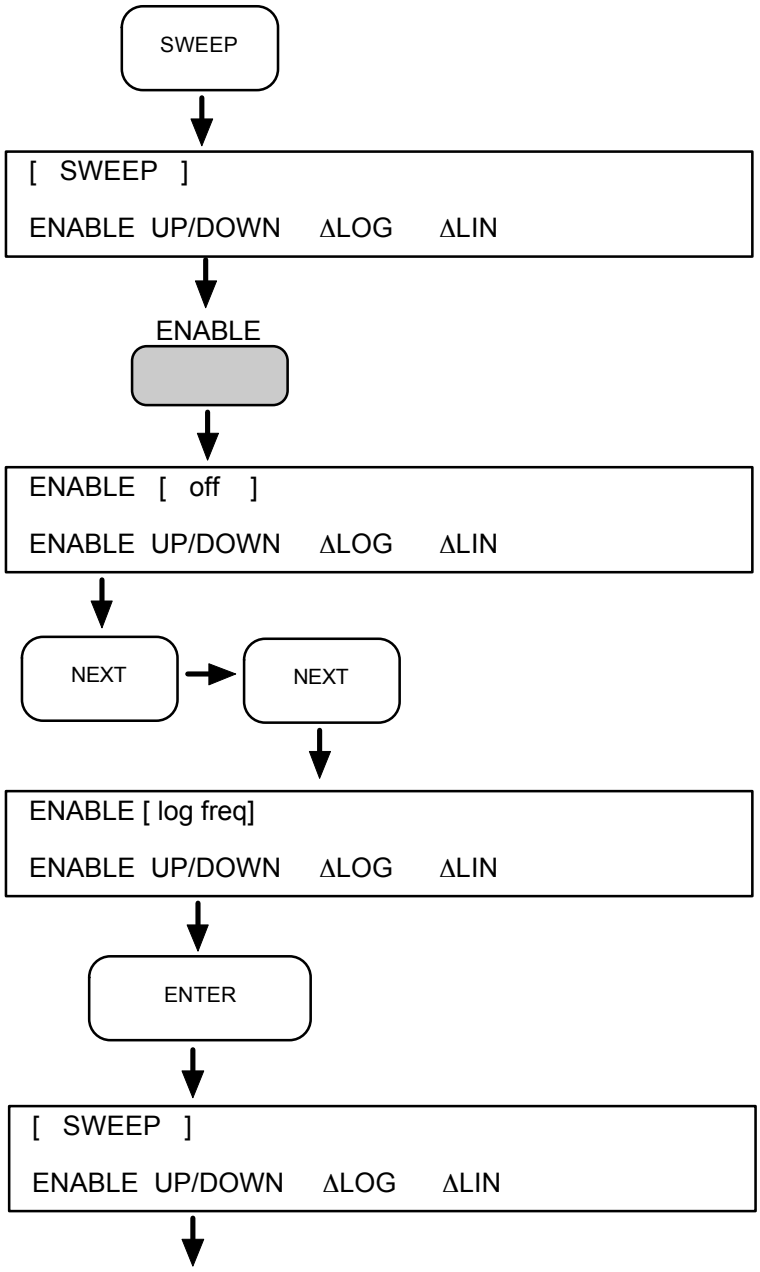

Press the SWEEP hard key ...

... to select the [SWEEP] menu.

Then press the ENABLE soft key...

... to display the present *'enable'* setting. Thissetting selects the generator output parameter to be swept and, for frequency sweeps, log or linear steps. Amplitude and bias have linear steps only.

Select the second setting on...

... which is for log spaced frequency steps...

... and enter it.

The menu title is displayed again to show that entry is complete.

Axion Exhibit 1024
Axion v. Agilent

ΔLOG

Then press the ENABLE soft key...

```
ΔLOG    200.00 pts/swp (+_                  )  pts/swp
ENABLE  UP/DOWN    ΔLOG     ΔLIN
```

... to display the present *'enable'* setting. Thissetting selects the generator output parameter to be swept and, for frequency sweeps, log or linear steps. Amplitude and bias have linear steps only.

5 → 0

Select the second setting on...

```
ΔLOG    200.00 pts/swp (+50_                )  pts/swp
ENABLE  UP/DOWN    ΔLOG     ΔLIN
```

... which is for log spaced frequency steps...

ENTER

... and enter it.

```
[  SWEEP  ]
ENABLE  UP/DOWN    ΔLOG     ΔLIN
```

The menu title is displayed again to show that entry is complete.

NEXT

Select the next menu page...

```
[  SWEEP LIMITS  ]
FREQ     V.AMPL     V.BIAS     I.AMPL     I.BIAS
```

... which is [SWEEP LIMITS].

FREQ

... and press the FREQ key

```
F.MIN 100.00000 Hz (+_                  ) [Hz]
FREQ     V.AMPL     V.BIAS     I.AMPL     I.BIAS
```

... to display the present value of F.MIN, the minimum frequency. The default value of 100Hz is the frequency you want, so....

ENTER

... press ENTER, to...

```
F.MAX 1.0000000 MHz (+_                 ) [Hz]
ENABLE  UP/DOWN    ΔLOG     ΔLIN
```

... display the present setting of F.MAX, the maximum frequency. Round brackets invite the entry of a new frequency, so...

Axion Exhibit 1024
Axion v. Agilent

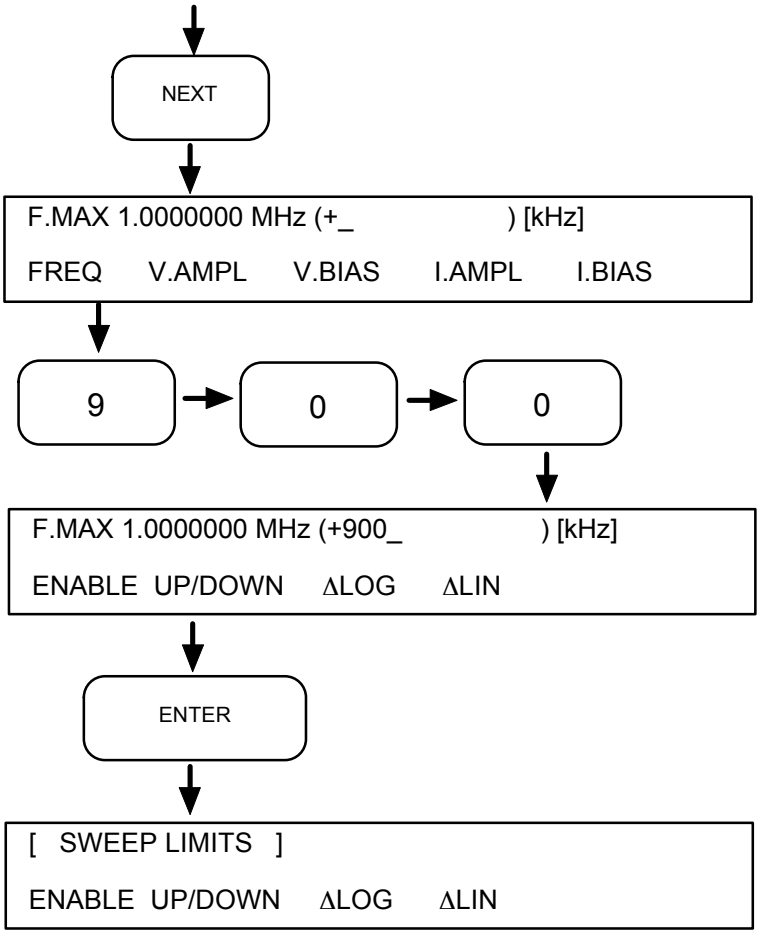

... select the next frequency units...

... i.e. kHz...

...key in a maximum frequency value of ...

... 900 (kHz)....

... and enter it.

"SWEEP LIMITS" is displayed to show that entry is complete.

The sweep is now set, and a series of measurements can be made.

3.7.1.1 Effect of Sweep on Generator Loading

Before actually commanding a sweep it is wise to consider how the variation in drive frequency will affect the generator loading.

In the present example a constant drive amplitude of 1V is used. The impedance of the item under test decreases with frequency, therefore we should look at the loading at 900kHz. At this frequency the reactance of the capacitor (= 1/ωC) 17.70. The effect of the 1kΩ parallel resistance is negligible, so the impedance of the item under test ≈ 17.7Ω. The current drain on the generator output will thus be around 56.5mA, which the generator can supply (max. ac- current output **=** 60mA). To keep the test current within reasonable bounds at the higher test frequencies a lower drive voltage should be selected: two or more consecutive sweeps, each covering part of the test band and using a suitable drive voltage, can be set up with a *learnt program* (See Chapter 11).

You can, of course, select a constant current drive, by entering [current] under the GENERATOR TYPE. Then, with the present item under test, you should consider the current at the low frequency end of the sweep: the impedance of the item at 100Hz approaches 1kΩ, therefore the highest test current which can be obtained, at this frequency, is 3mA. (The maximum drive voltage is 3V.)

Axion Exhibit 1024
Axion v. Agilent

3.7.2 PREPARING THE HISTORY FILE

The flow of data to the history file is controlled from the DATA OUTPUT menu. For the present example the default settings are used. As a result:

- the file is *cleared automatically* at the beginning of sweep....
  (CLEAR set to [auto] on [FILE CONFIGURE] page)
- and, as the sweep progresses, the basic data of *all measurements* are filed....
  (FILE set to [all] on [DATA OUTPUT] page)
- in *normal format.*
  (FORMAT set to [normal] on [FILE CONFIGURE] page)

3.7.3 Commanding a Series of Measurements

To complete a sweep, a measure command must be given for each point defined in the SWEEP menu.

SINGLE commands advance the sweep one measurement at a time, and allow measurement results to be assessed as they occur.

RECYCLE advances the sweep automatically. The measurement results can be assessed on sweep completion by reading them from the history file, with the VIEW FILE facility. This is the procedure used in the present example:

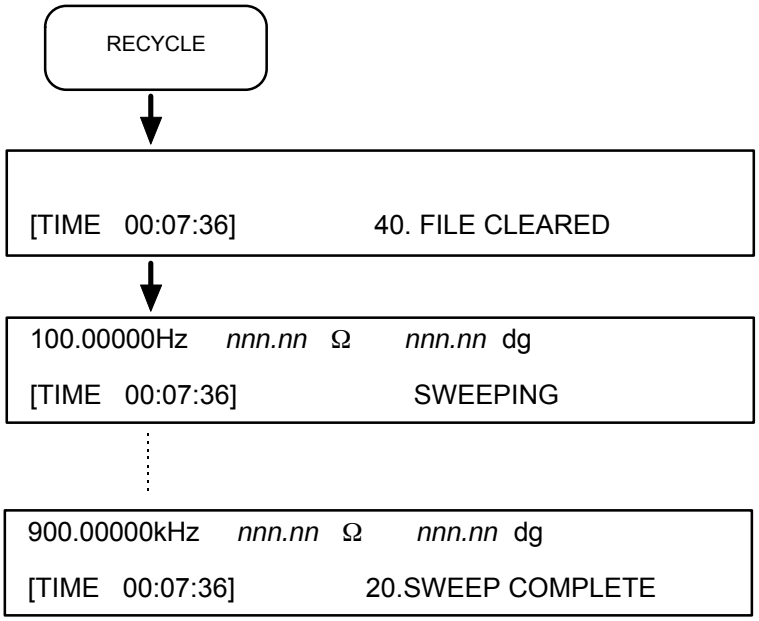

Press RECYCLE

First, the history file is cleared.

(In DATA OUTPUT, FILE CONFIGURE menu, CLEAR set to [auto] - the default state.)

First, the history file is cleared.

(In DATA OUTPUT, FILE CONFIGURE menu, CLEAR set to [auto] - the default state.)

... and the sweep continues automatically..

... until the last measurement at the maximum frequency (900 kHz)

The measurement results may now be read from the history file.

3.7.4 READING THE HISTORY FILE

The history file contains the basic data of all measurements made in the sweep. For each measurement the data are stored in a specific file location, known as a *line.* The first measurement data are stored on line #1, the second on line #2, and so on. File locations may be accessed in any order from VIEW FILE. The form of the measurement results obtained from the basic data is selected from the DISPLAY menu. The results may be displayed in any order. They can, for example, be displayed in measurement order:

Axion Exhibit 1024
Axion v. Agilent

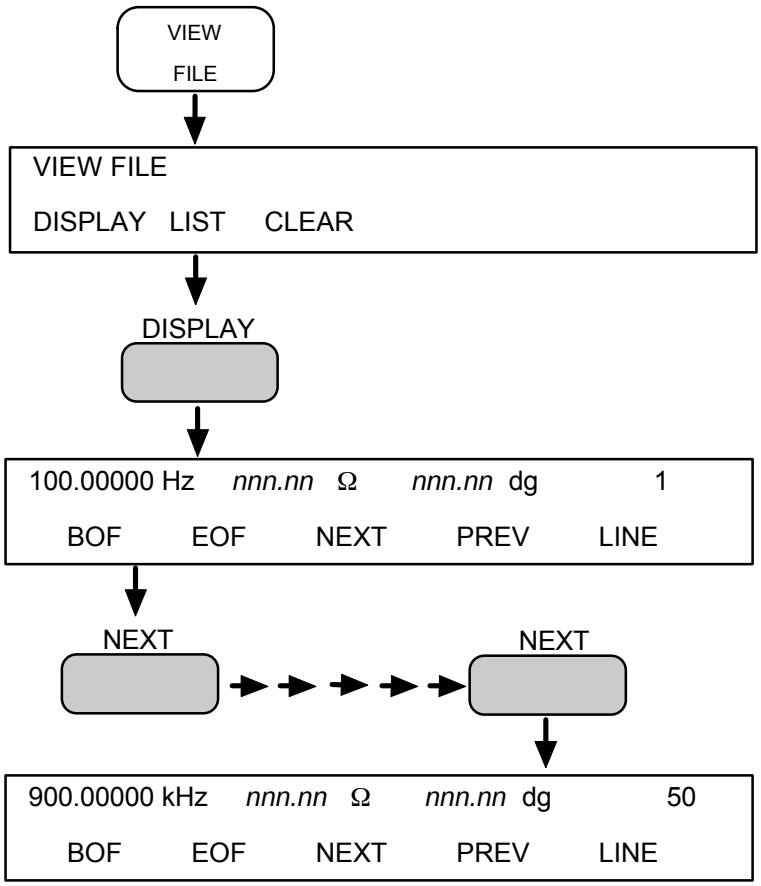

Press VIEW FILE...

... to access the file control keys.

Then press DISPLAY...

... to display a result from line #1...

... and the file display functions.

Using NEXT, step to each location in turn, until...

... the line at the end of the file (EOF) is reached (e.g. #50).

The functions of the other DISPLAY keys are:

PREV	Steps through the file in reverse order.
BOF	Displays line #1
EOF	Displays the highest numbered line containing data.
LINE	Displays the results on a specified line number.

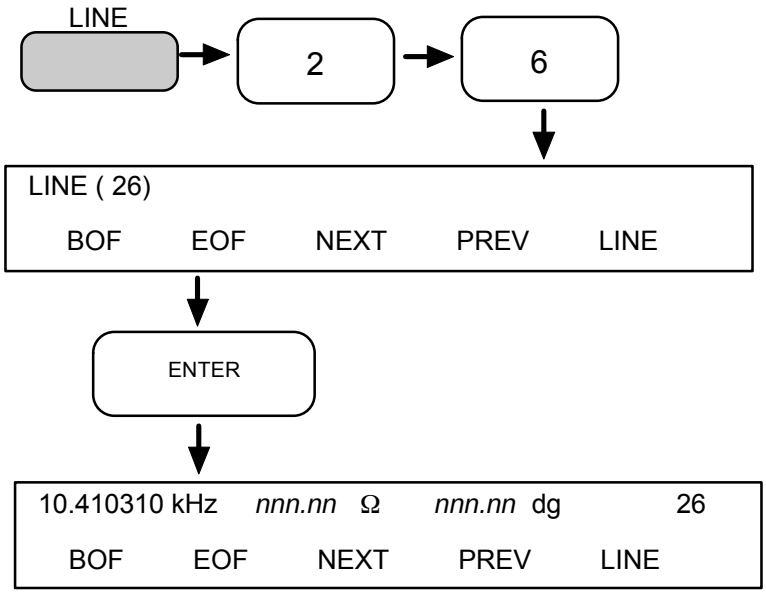

Press LINE and key in the line number.

Enter the line number...

... and the result is displayed.

Axion Exhibit 1024
Axion v. Agilent

3.8 USING THE PLOT FACILITY

With the present example a *Z,*θ plot may be made of the sweep results (stored in the history file) simply by pressing the PLOT key. This assumes, of course, that a digital plotter, suitably set up, is connected to the instruments GPIB interface. Other types 'of plot, e.g. *R,X* may be made from the same basic data. The procedures for making a *Z,*θ plot and an *R,X* plot are given below.

The appearance of a plot may be changed from the PLOTTER menu. For example, the results can be plotted as points rather than joined by straight lines, a grid can be printed over the plot to assist in interpreting the results, and the plot can be given a title. (See Chapter 5, Section 5.)

Measurement results may also be plotted as they occur. For this, however, the plotting field must be set manually, from the PLOTTER AXES menu. (See Chapter 5, Section 7.)

3.8.1 MAKING A Z,θ PLOT OF THE HISTORY FILE DATA

This example uses the data acquired in the previous example. A digital plotter, using HPGL (Hewlett Packard Graphics Language), is connected to the GPIB interface. (For plotters using ESGL (Enertec Schlumberger Graphics Language) the DEVICE setting in the PLOTTER menu must be set to [ESGL].)

3.8.1.1 Installing the GPIB Plotter

At the GPIB interface on the rear panel, set the *talk* only switch to ON, press BREAK, and plug a digital plotter into the GPIB connector. (See Fig 3.2.) Ensure that the plotter is set to *listen only,* as described in its operating manual.

Switch the plotter on and load a clean sheet of paper onto the platten.

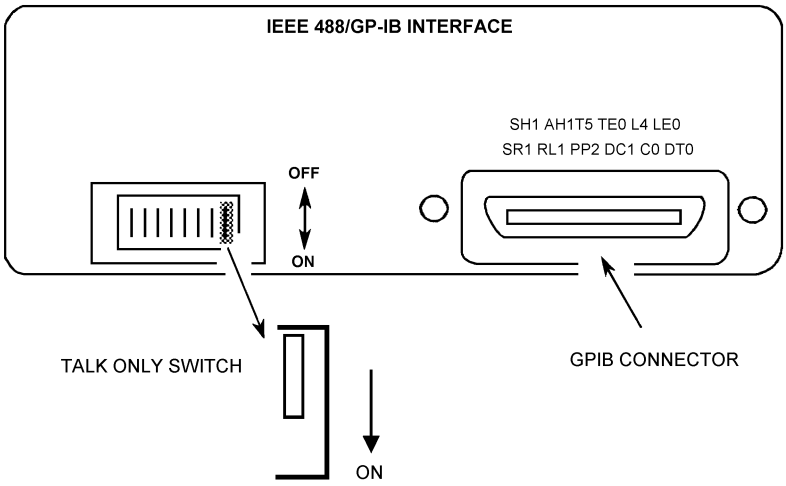

Fig 3.2 - Setting the instrument to "talk only".

Axion Exhibit 1024
Axion v. Agilent

3.8.1.2 Commanding the Z,q plot

Press the PLOT key and the pen should move from the parking position to the top right corner of the plotting area; this shows that something is happening. Then, after a short "thinking" delay, the plot will begin.

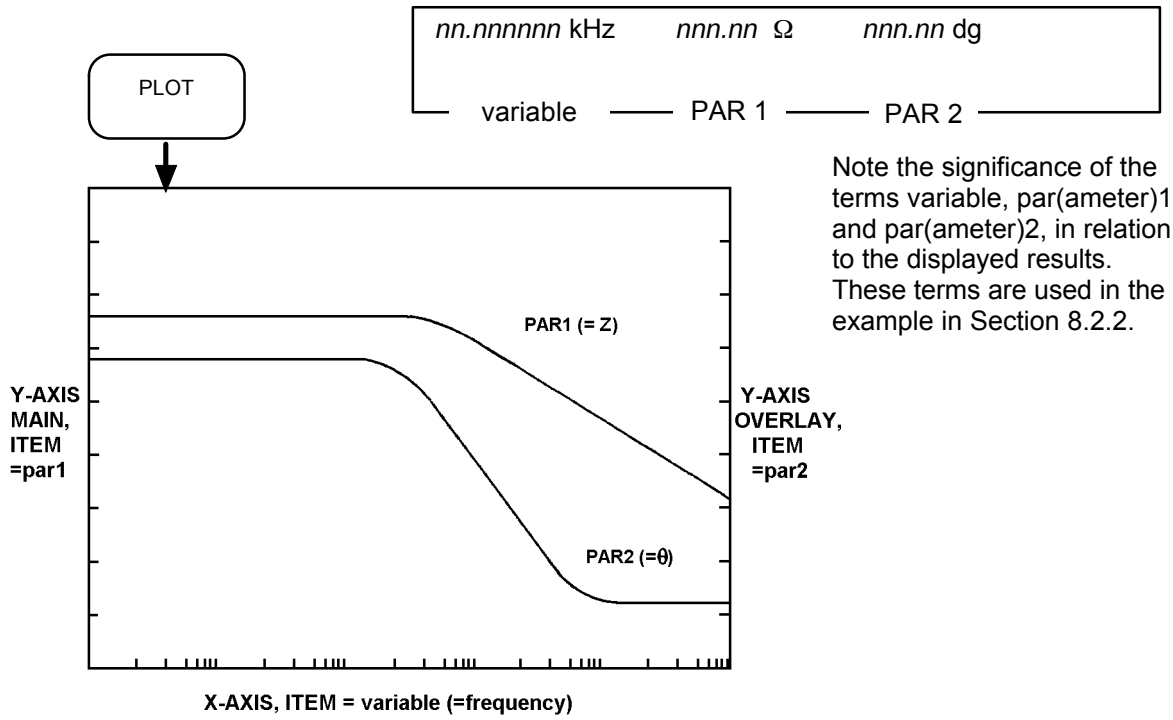

Note the significance of the terms variable, par(ameter)1 and par(ameter)2, in relation to the displayed results. These terms are used in the example in Section 8.2.2.

3.8.2 MAKING AN R,X PLOT OF THE HISTORY FILE DATA

To make an *R,X* plot, the *R* (resistance) and X (reactance) coordinates must first be selected as the displayed result. The two coordinates must also be assigned to the plotter X- and Y-axes.

3.8.2.1 Setting the Display Coordinates

Use the DISPLAY menu to select the *R,X* coordinates:

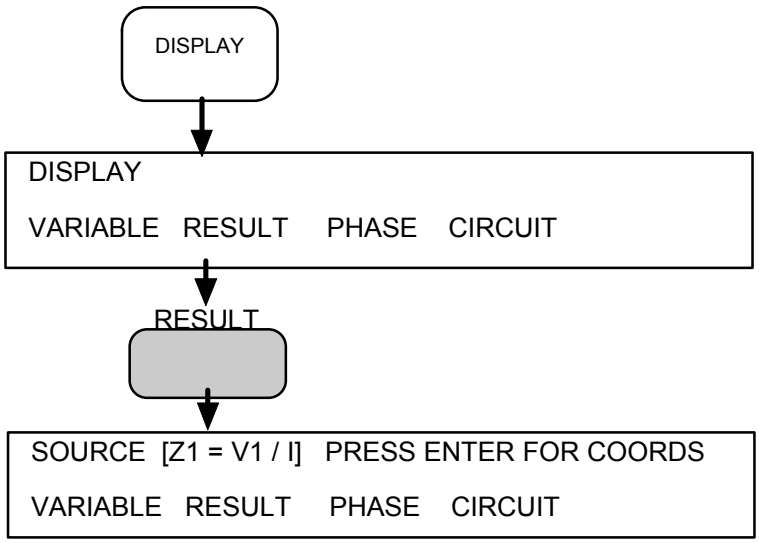

Press the DISPLAY hard key ...

... to select the display menu. The titles of the parameters that can be set up appear over the soft keys.

Then press the RESULT soft key...

... to display the present data source. Z1= V1/I is the source required, so...

Axion Exhibit 1024
Axion v. Agilent

ENTER

... enter it, to display the present coordinate setting....

COORDS [Z,θ]
VARIABLE RESULT PHASE CIRCUIT

...which is for the polar coordinates of impedance, Z, θ.

PREV

Now select the previous setting...

COORDS [R,X]
VARIABLE RESULT PHASE CIRCUIT

... which is for the Cartesian coordinates of impedance, R,X...

ENTER

... and enter it.

DISPLAY
VARIABLE RESULT PHASE CIRCUIT

The menu title is displayed again to show that entry is complete.

3.8.2.2 Setting the Plotter Axes

Use the PLOTTER AXES menu to assign the *R* (resistance) coordinate to the X-axis and the X (reactance) coordinate to the Y-axis.

PLOTTER AXES

Press the PLOTTER AXES hard key ...

[PLOTTER X-AXIS]
ITEM LIMITS LIN/LOG PEN

... to select the PLOTTER X-AXIS menu. The titles of the parameters that can be set up appear over the soft keys.

ITEM

Press the ITEM soft key...

ITEM [variable]
ITEM LIMITS LIN/LOG PEN

... to display the present item assigned to the X-axis.

NEXT

Select the next item...

Axion Exhibit 1024
Axion v. Agilent

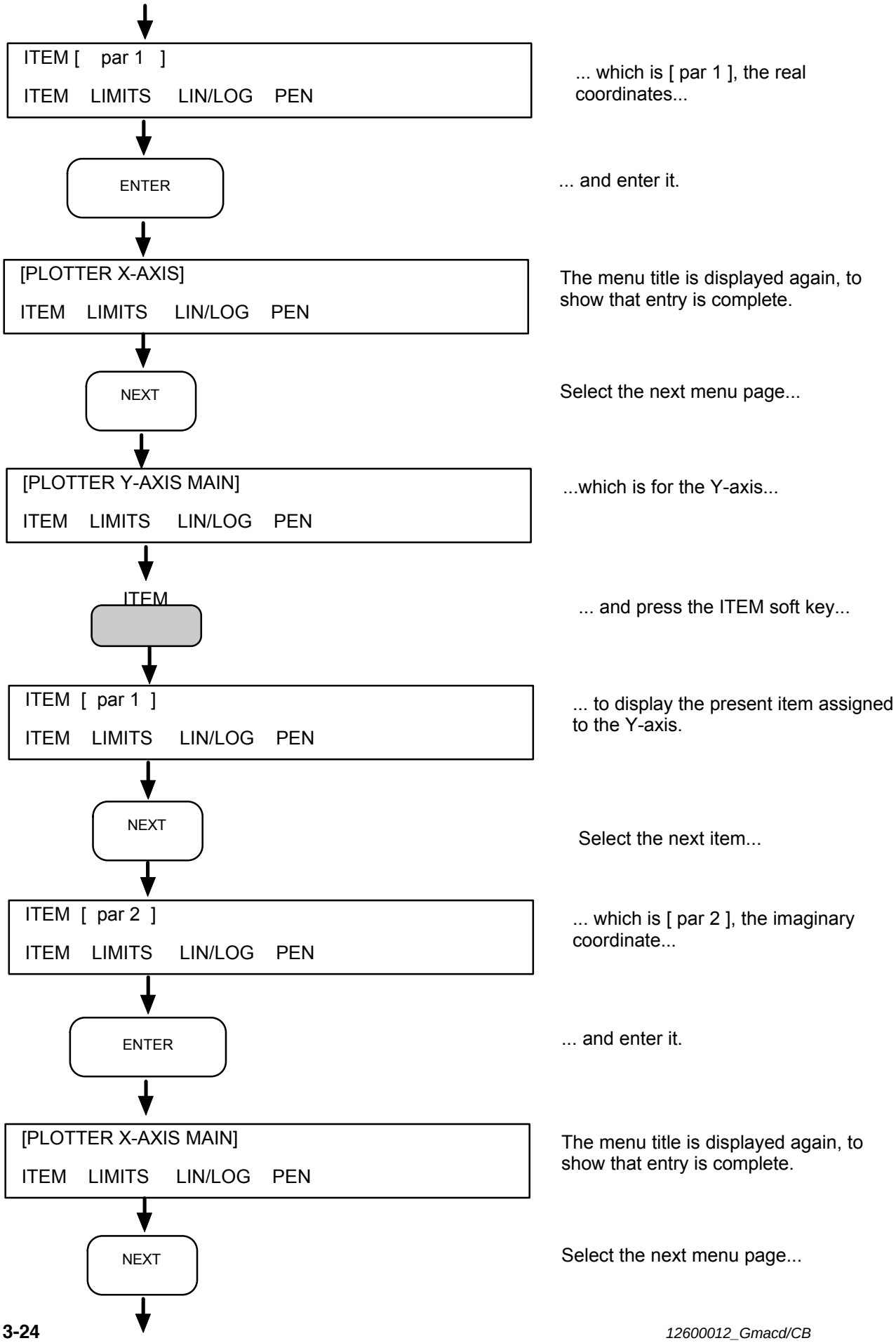

Axion Exhibit 1024
Axion v. Agilent

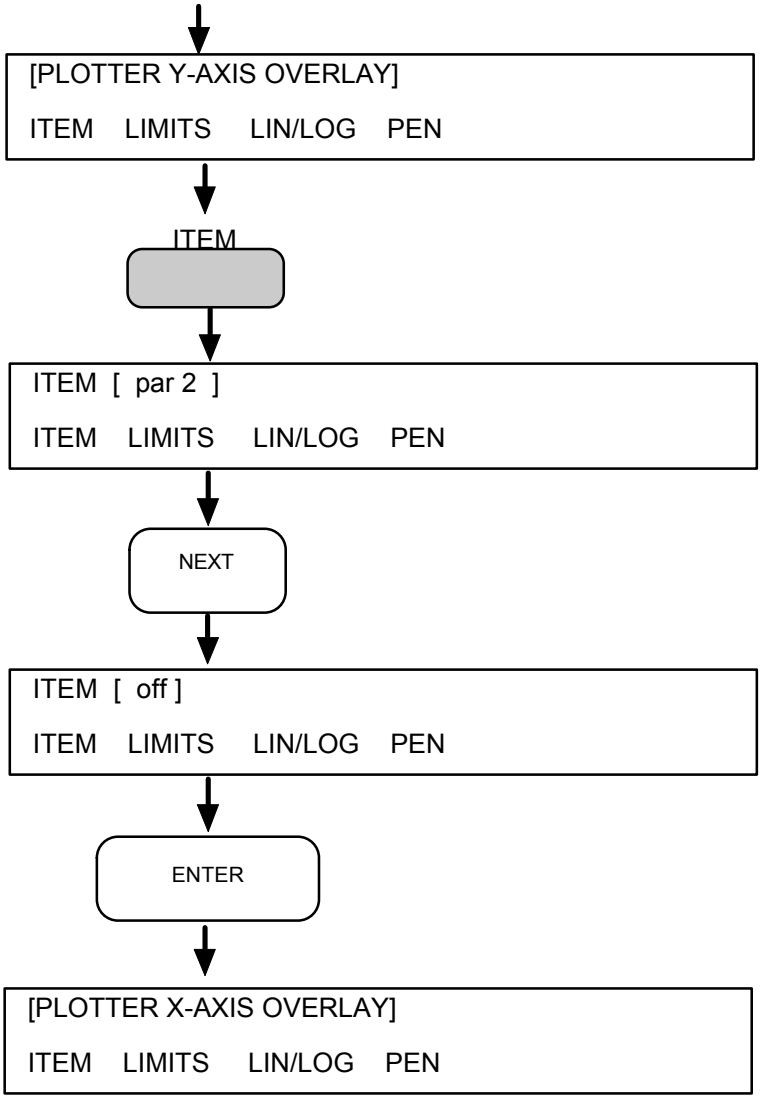

...which is for the Y-axis overlay...

Press the ITEM soft key...

... to display the present item assigned to the Y-axis overlay.

Select the next item...

... which is [off]...

... and enter it.

The menu title is displayed again, to show that entry is complete.

Now command the *R, X* plot, as shown overleaf.

Axion Exhibit 1024
Axion v. Agilent

3.8.2.3 Commanding the R,X Plot

To start the R,X plot press the PLOT key:

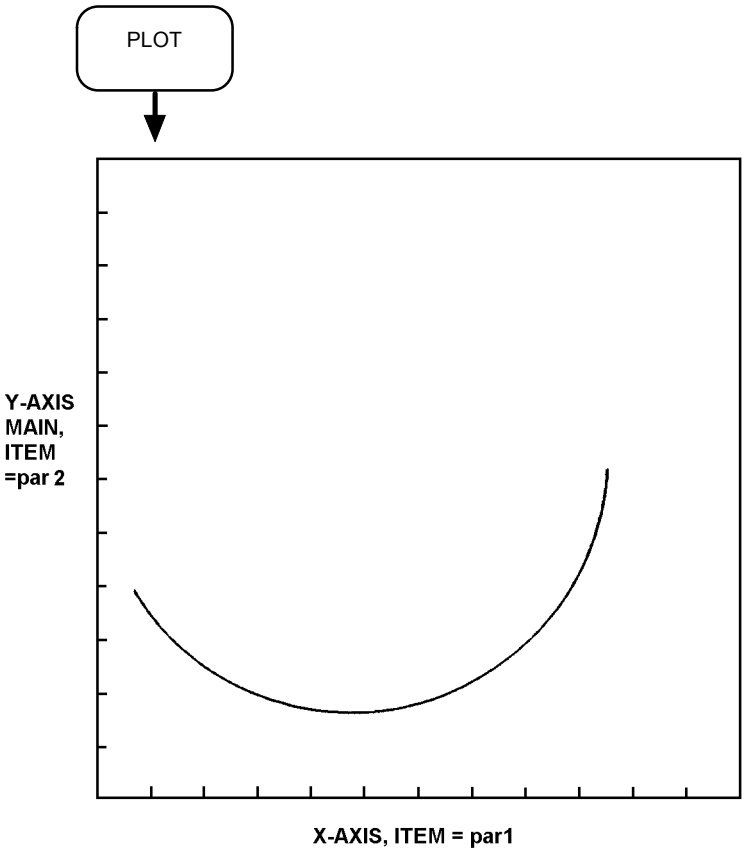

Axion Exhibit 1024
Axion v. Agilent

4
Menu Summary

Section		*Page*
4.1	**Menu Summary**	**4.2**
	Generator	4.3
	Analyzer	4.3
	Sweep	4.4
	Display	4.5
	Plotter	4.5
	Plotter Axes	4.6
	Data Output	4.6
	Scale/Limits	4.7
	View File	4.8
	Vernier	4.8
	Status	4 8
	Store/recall	4.9
	Learn Program	4.9
	Self Test	4.9

Axion Exhibit 1024
Axion v. Agilent

4.1 MENU SUMMARY

This summary is intended as a memory aid for experienced users.

Numeric parameters are indicated by round brackets. The generator output frequency, for example, appears thus:

FREQ (+)

Where applicable, the range and default values of a numeric parameter are shown against it. For example, the range and default values of the generator output frequency are shown thus:

10μHz to 32MHz;
default=100Hz.

The absence of a default value generally indicates that a parameter defaults to zero.

With listed choice parameters the full list of settings is shown, with the default setting enclosed in square brackets. For example, the choice of frequency units available for the generator output is shown thus:

[Hz] • kHz • MHz • μHz • mHz

Axion Exhibit 1024
Axion v. Agilent

MENU	PARAMETER	SETTINGS
GENERATOR	TYPE	**[voltage]** • current
	FREQ	(+) **[Hz]** • kHz • MHz • pHz • mHz — 10μHz to 32 MHz, default = 100Hz
	V. AMPL	(+) **[V]** • mV — 0V to 3V ($f \leq$ 10MHz), 0V to 1V ($f >$ 10MHz)
	V. BIAS	(+) **[V]** • mV — -40.95V to +40.95V
[GENERATOR Cont.]	TYPE	**[voltage]** • current
	FREQ	(+) **[Hz]** • kHz • MHz • pHz • mHz — 10μHz to 32 MHz, default = 100Hz
	I. AMPL	(+) **[mA]** • μA — 0mA to 60mA ($f \leq$ 10MHz), 0V to 1V ($f >$ 10MHz)
	I. BIAS	(+) **[mA]** • μA — -100mA to +100mA
[MONITOR]	ENABLE	**[monitor off]** • monitor V1, target = V. AMPL • monitor I, target = I. AMPL
	V. LIMIT	(+) **[V]** • mV — 0V to 3V ($f \leq$ 10MHz), 0V to 1V ($f >$ 10MHz), default = 3V
	I. LIMIT	(+) **[mA]** • μA — 0mA to 60mA ($f \leq$ 10MHz), 0mA to 20mA ($f >$ 10MHz)
	ERROR %	(+) — 1% to 50%, default = 5%
ANALYZER [ANALYSIS]	∫ TIME	(+) secs — 0.01 secs to 10^5 secs, default = 3V
	DELAY	(+) secs — 0 secs to 10^5 secs
	AUTO ∫	**[off]** • long ∫ on V1 • short ∫ on V1 • long ∫ on V2 • short ∫ on V2 • long ∫ on I • short ∫ on I
	MODE	**[normal]** • group delay* • auto impedance *-ΔFREQ % (+) 0% to 50% *+ΔFREQ % (+) 0% to 50%
[INPUT]	RANGE	**[auto]** • 30mV • 300mV • 3V
	COUPLING	**[dc]** • ac
	INPUT	**[diff.]** • single
	OUTER	**[grounded]** • floating

Axion Exhibit 1024
Axion v. Agilent

MENU	PARAMETER	SETTINGS
ANALYZER Cont [INPUT V2]	RANGE COUPLING INPUT OUTER	**[auto]** • 30mV • 300mV • 3V **[dc]** • ac **[single]** • diff. **[grounded]** • floating
[INPUT]	RANGE COUPLING	**[auto]** • 6μA • 60μA • 600μA • 6mA • 60mA **[dc]** • ac
SWEEP [SWEEP]	ENABLE V. LIMIT ΔLOG ΔLIN	**[off]** • lin freq • log freq • amplitude • bias **[up]** • down (+)**pts/swp** 2 to 50 x 10^3 points; default 200 points (+)**[pts/swp]** • unit/st* *1 x 10^{-5} to 20 x 10^6 units/step
[SWEEP LIMITS]	FREQ V. AMPL V. BIAS I. AMPL I. BIAS	F. MIN (+) **[Hz]** • kHz • MHz • μHz • mHz 10μHz to 32MHz default 100Hz F. MAX (+) **[Hz]** • kHz • MHz • μHz • mHz 10μHz to 32MHz default 1MHz V. MIN (+) **[V]** • mV 0V to 3V ($f \leq$ 10MHz) 0V to 1V (f > 10MHz) V. MAX (+) **[V]** • mV 0V to 3V ($f \leq$ 10MHz) 0V to 1V (f > 10MHz) BIAS MIN (+) **[V]** • mV -40.95V to +40.95V BIAS MAX (+) **[V]** • mV -40.95V to +40.95V I. MIN (+) **[mA]** • μA 0mA to 60mA ($f \leq$ 10MHz) 0mA to 20mA (f > 10MHz) I. MAX (+) **[mA]** • μA 0mA to 60mA ($f \leq$ 10MHz) 0mA to 20mA (f > 10MHz) I. MIN (+) **[mA]** • μA -100mA to +100mA I. MAX (+) **[mA]** • μA -100mA to +100mA

Axion Exhibit 1024
Axion v. Agilent

MENU	PARAMETER	SETTINGS
DISPLAY	VARIABLE	**[freq]** • ampl • bias
	RESULT	SOURCE **[Z1 = V1/I]** Enter for COORDS: **[L(or C),R]** • L(or C),Q • L(or C),D • R,X • Z,θ • Y1 = I/V1 Enter for COORDS: **[L(or C),R]** • L(or C),Q • L(or C),D • G,B • Y,θ • Z2 = V2/I Enter for COORDS: **[L(or C),R]** • L(or C),Q • L(or C),D • R,X • Z,θ • Y2 = I/V2 Enter for COORDS: **[L(or C),R]** • L(or C),Q • L(or C),D • G,B • Z,θ • FUNCTION ( ) Enter for COORDS: **[R,θ]** • r(dB),θ • r,t • r(dB),t • [L(or C),R] • L(or C),Q • L(or C),D • a,b • V1 • V2 • V1/V2 • V2/V1 Enter for COORDS: **[r(dB),θ]** • r,t • r(dB),t • a,b • r,θ • I Enter for COORDS: **[r,θ]** • a,b
	PHASE	**[normal]** • unwrapped
	CIRCUIT	**[parallel C,R]** • auto • series L,R • series C,R • parallel L,R
PLOTTER	MODE	**[vector]** • point
	TEXT	**[on]** • off
	GRID	**[off]** • on
	AXES	**[on]** • off
	DEVICE	**[GPIB-HPGL]** • GPIB-ESGL
[PLOTTER SCALING]	SIZE	**[A4]** • A3 • scaled
	X-MIN	(+) 0 to 32000 units: default = 1404 units
	Y-MIN	(+) 0 to 32000 units: default = 1368 units
	X-MAX	(+) 0 to 32000 units: default = 8920 units
	Y-MAX	(+) 0 to 32000 units: default = 6984 units
[PLOTTER TITLE]	OLD NEW	

Axion Exhibit 1024
Axion v. Agilent

MENU	PARAMETER	SETTINGS
PLOTTER AXES [PLOTTER X-AXIS]	ITEM	**[variable]** • par 1 • par 2
	LIMITS	**[auto]** • manual • *MINIMUM (+) -999×10^{15} to $+999 \times 10^{15}$ *MAXIMUM (+) -999×10^{15} to $+999 \times 10^{15}$
	LIN/LOG	**[auto]** • linear • log
	PEN	( ) pen number: 1 to 9; default = pen 3
[PLOTTER Y-AXIS MAIN]	ITEM	**[par 1]** • par 2 • variable
	LIMITS	**[auto]** • manual • *MINIMUM (+) -999×10^{15} to $+999 \times 10^{15}$ *MAXIMUM (+) -999×10^{15} to $+999 \times 10^{15}$
	LIN/LOG	**[auto]** • linear • log
	PEN	( ) pen number: 1 to 9; default = pen 1
[PLOTTER Y-AXIS OVERLAY]	ITEM	**[par 2]** • off • variable • par 1
	LIMITS	**[auto]** • manual • same as main *MINIMUM (+) -999×10^{15} to $+999 \times 10^{15}$ *MAXIMUM (+) -999×10^{15} to $+999 \times 10^{15}$
	LIN/LOG	**[auto]** • linear • log
	PEN	( ) pen number: 1 to 9; default = pen 2
DATA OUTPUT [DATA OUTPUT]	RS-423	**[off]** • all • fail • pass • dump • dump all
	GPIB	**[off]** • all • fail • pass • dump • dump all • plotter
	FILE	**[all]** • fail • pass • off
	HEADING	**[on]** • off
[GPIB CONFIGURE]	TERM.	**[cr lf + EOI]** • cr • cr + EOI • cr lf
	SEP.	**[comma]** • terminator
[RS 423 CONFIGURE]	MODE	**[printer]** • terminator
	ECHO	**[on]** • off
	TERM.	**[cr lf]** • cr lf + null • cr • cr + null
	SEP.	**[comma]** • terminator
	XOFF/XON	**[enable]** • disable

Axion Exhibit 1024
Axion v. Agilent

MENU	PARAMETER	SETTINGS
DATA O/P Cont. [FILE CONFIGURE]	FORMAT CLEAR STATS	**[normal]** • group delay **[auto]** • manual **[par 1]** • par 2
SCALE/LIMITS [SCALING]	NORM. NULL CONSTS FUNCT. LEARN CLEAR DEVΔ	**[off]** • on • evaluate **[off]** • on • evaluate CONSTANT NUMBER ( ) constant number 1 to 9 LEARN FUNCTION ( ) function number 1 to 18 CLEAR FUNCTION ( ) function number 1 to 18 **[off]** • Δ* • Δ%* *STORE=( ) store number 1 to 9; default = store 1
[LIMITS]	ITEM LIMITS	**[off]** • par 1 • par 2 LOWER LIMIT ( ) -999×10^{12} to $+999 \times 10^{12}$ UPPER LIMIT ( ) -999×10^{12} to $+999 \times 10^{12}$
[BINSORT A]	ENABLE ITEM BINS STOP	**[off]** • continuous • fixed count • random *STEP SIZE ( ) step size 0 to 255 **[par 1]** • par 2 PARAMETER VALUE ( ) -999×10^{12} to $+999 \times 10^{12}$ NUMBER OF BINS ( ) 1 to 32; default = 1 BIN 01 MIN% ( ) default = +1% -999×10^{12} to $+999 \times 10^{12}$ BIN 01 MAX% ( ) default = -1% -999×10^{12} to $+999 \times 10^{12}$ **[off]** • on STOP AFTER ( ) number of measurements 0 to 999×10^{12}
[BINSORT B]	RETRY LEVELS LOGIC	NUMBER OF RETRIES ( ) number of retries 0 to 255; default = 0 **[+5V]** • 18V **[negative]** • 18V

Axion Exhibit 1024
Axion v. Agilent

MENU	PARAMETER	SETTINGS
VIEW FILE		
	DISPLAY	Display file location #1.
	BOF	Go to beginning of file.
	EOF	Go to end of file.
	NEXT	Go to next line (line n + 1).
	PREV	Go to previous line (line n - 1).
	LINE	Go to location n.
	LIST	Output each file location in succession.
	CLEAR	Erase file contents.
VERNIER [VERNIER]		Adjust generator output:
	FREQ	• frequency
	AMPL	• amplitude
	BIAS	• bias
[VERNIER]		Adjust plotter scaling for:
	X-min	• minimum value of X coordinate 0 to 32000 units
	Y-min	• minimum value of Y coordinate 0 to 32000 units
	X-max	• minimum value of Y coordinate 0 to 32000 units
	Y-max	• minimum value of Y coordinate 0 to 32000 units
STATUS [STATUS 1]		Display status of:
	PROGRAM	• learn program memory (three pages).
	μP	• microprocessor (two pages).
	INT.FACE	• GPIB and RS423 data ports (three pages).
	STORE	• control/result store (two pages).
	FILE	• History file (two pages).
[STATUS 2]		Display status of:
	FUNCTION	• scaling functions (twenty pages).
	CONST	• scaling constants (ten pages).
	RESULTS	• stored results (ten pages).
	STATS	• history file statistics (two pages).

Axion Exhibit 1024
Axion v. Agilent

MENU	PARAMETER	SETTINGS
STORE/ RECALL [SET UP]	STORE RECALL CLEAR	( )* Store control set-ups in location *n*. ( )* Recall control set-ups in location *n*. ( )* Delete control set-ups in location *n*. * location no. 1 to 9, volatile mem; 10 to 16, non-vol. mem.
[RESULT]	STORE	( )* Store measurement result in location *n*. * location no. 1 to 9
LEARN PROGRAM	LEARN QUIT EDIT INSERT EDIT DELETE NEXT PREV QUIT CLEAR COPY	( )* Store commands as program *n*. • quit the learn function ( )* Enable edit of program *n*, using the commands: • insert instruction (return to edit level) • delete instruction • go to next instruction • go to previous instruction • quit the edit function ( )* Erase program *n*. ( )* Copy program *n* to ( ). * location no. 1 to 9, volatile mem; * location no. 1 to 9, volatile mem; 10 to 18, non-vol. mem.
SELF TEST	TEST INIT RESET TIME ERROR-	Test the operation of the measurement hardware, the microprocessor, the keyboard and the display. Set the control parameters to the default state and clear the history file, the result/control stores, and the learn program memory. Reset the control parameters to the default state. Set up the internal clock. [on] • off error “beep”

Axion Exhibit 1024
Axion v. Agilent

Axion Exhibit 1024
Axion v. Agilent

5
Menu Terms

Section		*Page*
5.1	**Generator**	**5.3**
5.2	**Analyzer**	**5.6**
5.3	**Sweep**	**5.12**
5.4	**Display**	**5.15**
5.5	**Plotter**	**5.18**
5.6	**Plot**	**5.23**
5.7	**Plotter Axes**	**5.24**
5.8	**Data Output**	**5.27**
5.9	**Scale/limits**	**5.31**
5.10	**View File**	**5.37**
5.11	**Vernier**	**5.38**
5.12	**Status**	**5.41**
5.13	**Store/recall**	**5.47**
5.14	**Learn program**	**5.48**
5.15	**Self test**	**5.50**

Axion Exhibit 1024
Axion v. Agilent

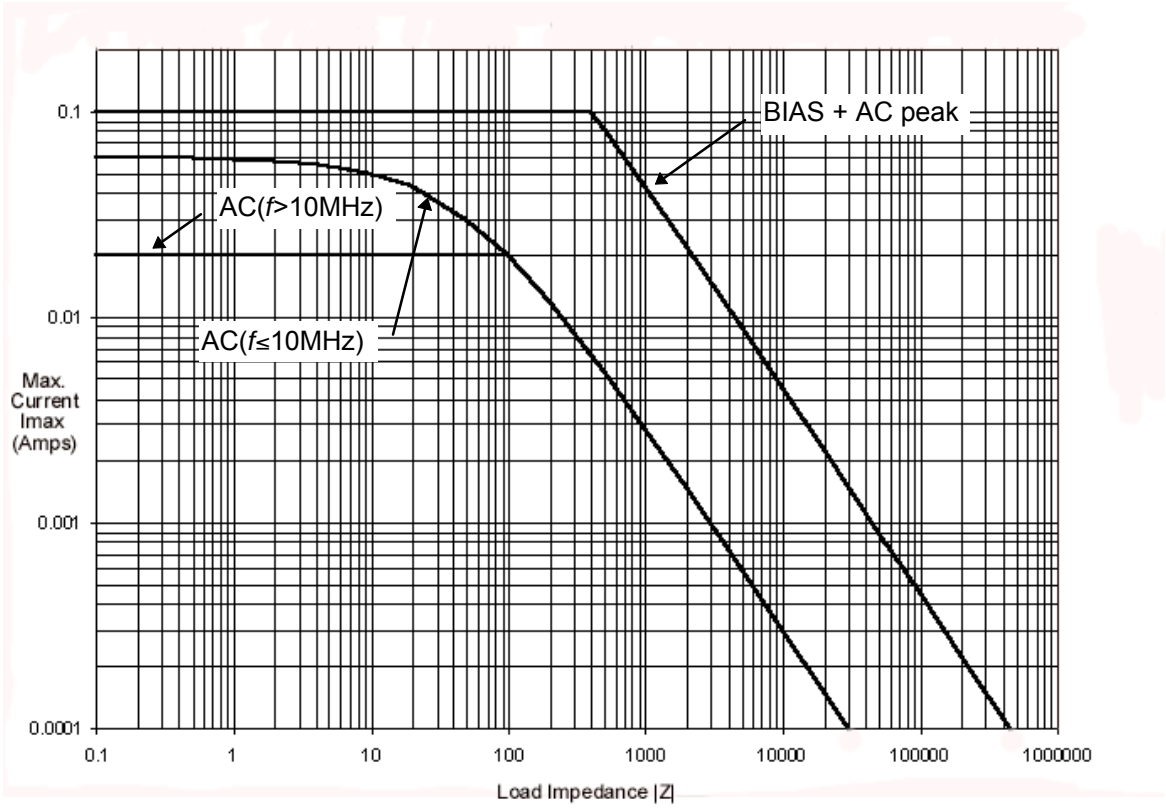

Current Limit of Generator Output

The current limit curves shown above result from the voltage compliance limit of the current generator (3 volts rms) and the amplitude limit (60mA for 10MHz and below; 20mA for above 10MHz). The ac curve fits the limit

$$|I_{max}| \times (50\Omega+|Z|) \leq 3\text{Vrms}$$

Similarly the curve for BIAS current is subject to a voltage compliance of 45 volts and a current limit of 100mA peak. The bias curve fits the limit

$$|I_{max}| \times (50\Omega+|Z|) \leq 45\text{Vpeak}$$

with an upper limit of 100mA.

Note that the BIAS limit is for BIAS + AC peak and that the impedance-AC-BIAS combination chosen must satisfy the limits for both AC and BIAS.

Axion Exhibit 1024
Axion v. Agilent

5.1 GENERATOR

The generator drives the item under test (IUT). The drive signal parameters are shown in Figure 5.1.

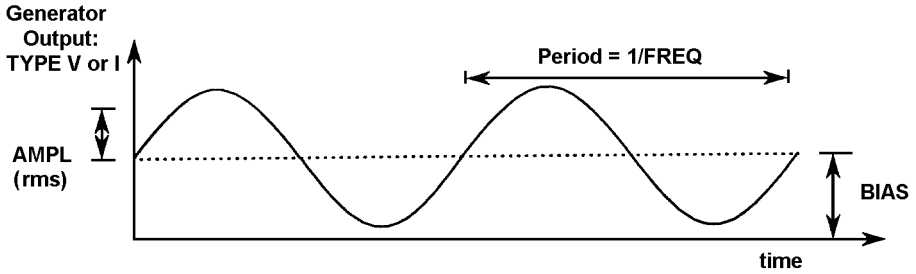

Figure 5.1 - Drive signal parameters

5.1.1 [GENERATOR]

Type of drive and constant voltage drive parameters.

TYPE Selects constant voltage or constant current drive:

- **[voltage]** Constant voltage drive:

  With MONITOR ENABLE set to [monitor off] the amplitude of the generator output voltage is held at the VAMPL value.

  With MONITOR ENABLE set to [monitor V1, target = V AMPL] the generator output is varied between 0V and V LIMIT in an attempt to hold the analyzer VOLTAGE 1 input at the V AMPL value.

  With MONITOR ENABLE set to [monitor 1, target = I AMPL] the generator output is varied between 0V and V LIMIT in an attempt to hold the analyzer CURRENT input at the I AMPL value.

- **[current]** Constant current drive:

  With MONITOR ENABLE set to [off] the amplitude of the generator output current is held at I AMPL value. (Set up the drive current parameters from the [GENERATOR Cont] page.)

  With MONITOR ENABLE set to [monitor V1, target = V AMPL] the generator output is varied between 0mA and I LIMIT in an attempt to hold the analyzer VOLTAGE 1 input at the V AMPL value.

  With MONITOR ENABLE set to [monitor I, target = I AMPL] the generator output is varied between 0mA and I LIMIT in an attempt to hold the analyzer CURRENT input at the I AMPL value.

FREQ Frequency of generator output. This is selectable in the range 10μHz to 32MHz. To vary the frequency progressively, use SWEEP.

V. AMPL Constant voltage ac amplitude, in the range 0V to 3V rms ($f \leq$ 10MHz) and 0V to 1V (f > MHz).

V. BIAS Constant voltage dc level, in the range -40.95V to =40.95V. Used for setting the quiescent operating point of the IUT or for nulling a dc offset.

Axion Exhibit 1024
Axion v. Agilent

5.1.2 [GENERATOR Cont]

Type of drive and constant current drive parameters.

TYPE Selects constant voltage or constant current drive. Duplicate of TYPE in Section 1.1 above.

FREQ Frequency of generator output. Duplicate of FREQ in Section 1.1 above.

I AMPL Constant current ac amplitude, in the range 0mA to 60mA rms ($f \leq$ 10MHz) and 0mA to 20mA rms (f > 10MHz).

I BIAS Constant voltage dc level, in the range -l00mA to + l00mA. Used for setting the quiescent operating point of the IUT or for nulling a dc offset.

5.1.3 [MONITOR]

Constant input signal parameters.

ENABLE Selects a constant signal level at the analyzer VOLTAGE 1 or CURRENT input. (In monitor mode the displayed amplitude variable represents the actual generator output.)

- **[monitor off]**
  Monitor facility off: generator output held at V AMPL or I AMPL value, in accordance with TYPE setting. (See Sections 1.1 and 1.2 above.)
- **[monitor V1, target = V. AMPL]**
  Constant voltage input. Generator output is adjusted automatically to hold the analyzer VOLTAGE 1 input at V AMPL ±ERROR%. During this process the generator output is not allowed to exceed the V LIMIT value.
- **[monitor I, target = I. AMPL]**
  Constant current input. Generator output is adjusted automatically to hold the analyzer CURRENT input at I AMPL ± ERROR%. During this process the generator output is not allowed to exceed the I LIMIT value.

V LIMIT Maximum amplitude voltage allowed at generator output in [monitor V1, target = V. AMPL] mode. (Default value = 3V.)

I LIMIT Maximum amplitude current allowed at generator output in [monitor I, target I. AMPL] mode. (Default value 60mA.)

ERROR% Percentage difference (1% to 50%) allowed between the generator output and the target value, in monitor mode.

A failure to obtain a target value within the defined error percentage (after two attempts) results in the error message “84. MONITOR FAILED”.

5.1.4 MONITOR CONFIGURATIONS

To hold an input signal at a constant level the instrument uses one of the feedback configurations schematized in Fig 5.2. These configurations are part hardware and part software and, excluding the IUT, are contained in the instrument. In each case the generator output is varied, within defined limits, to maintain the selected input at a defined level. An amplitude sweep with monitor enabled sweeps the selected input.

Axion Exhibit 1024
Axion v. Agilent

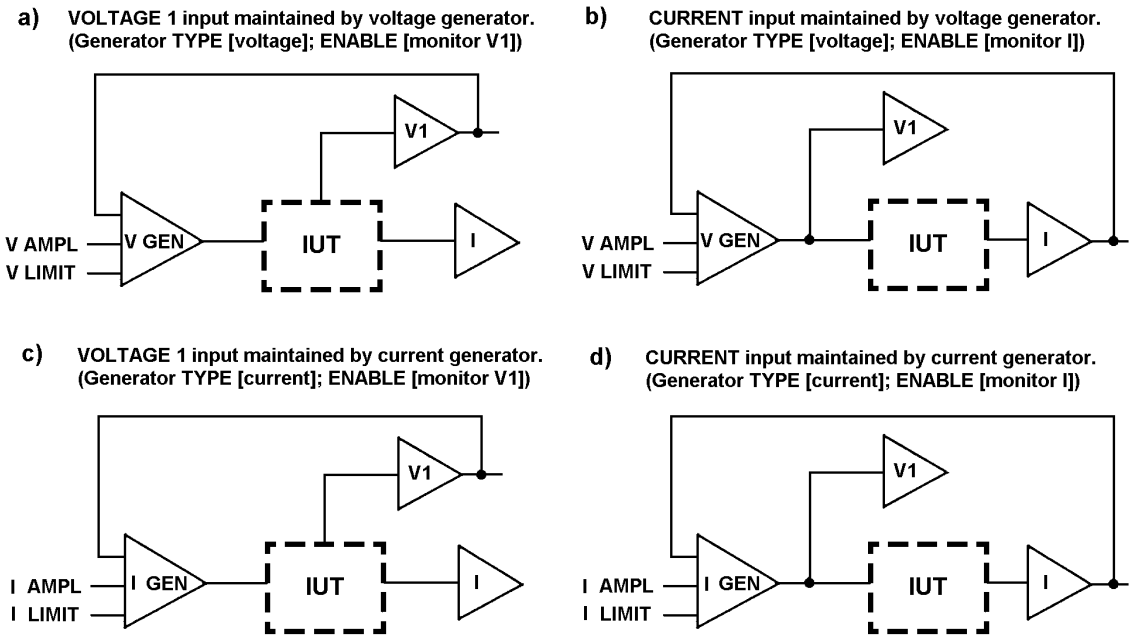

Figure 5.2 - Simplified schematic of monitor feedback configurations

5.1.5 GENERATOR START AND STOP CONTROL

The generator output is switched on, and stays on, when a measurement, SINGLE or RECYCLE, is commanded or when NULL [evaluate] or NORMALIZE [evaluate] is commanded.

BREAK switches the output off.

Other commands that switch the generator output off are:

KILL — This remotely generated signal is applied to a connector on the rear panel. When asserted, it holds the generator output at zero volts; when released, it allows the excitation signal to assume its set amplitude.

KILL also halts measurement data processing. Processing restarts, after KILL is released, with the next complete measurement.

Note that, with low frequency measurements, you may have to wait a considerable time for the measurement results to appear. For example, when measuring at 1mHz, the present ("killed") measurement will take up to 1000 secs to complete. Then, assuming KILL was released during this period, you will have to wait another 1000 secs for the results of the "released" measurement.

SELF TEST — Same action on generator output as BREAK.

RESET — Sets the AMPL value in the GENERATOR menu to zero.

INITIALIZE — Same action on generator output as RESET.

Axion Exhibit 1024
Axion v. Agilent

5.2 ANALYZER

The analyzer correlates the input signals V1,V2, and I at the drive signal frequency to obtain the frequency response and impedance of the item under test. From these basic measurement data the instrument can compute many different results in various formats: you select the result of your choice from the DISPLAY menu. Any scaling that may be necessary is selected from the SCALING menu: this includes nulling, normalisation, end scaling by functions. Limits checking and sorting of the results may be selected from the LIMITS and BINSORT menus.

The basic analysis data are stored in the history file (when this is enabled, from the DATA OUTPUT menu) and may be reviewed with the VIEW FILE facility.

5.2.1 [ANALYSIS]

Parameters common to all analyzer inputs. The DELAY and ∫ TIME parameters are shown in Figure 5.3.

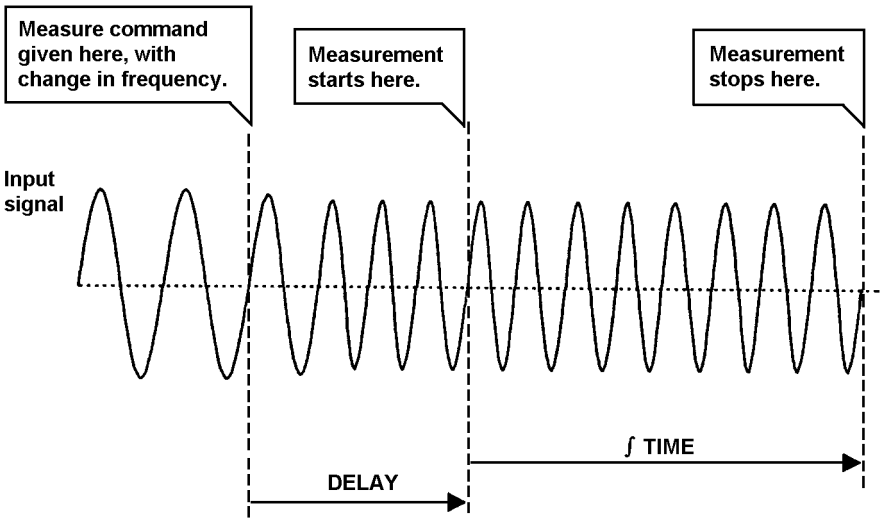

Figure 5.3 - Measurement delay and integration time

5.2.1.1 ∫ TIME

Integration time. The period over which the analyzer measures the input signals. The duration of this period determines the harmonic and noise rejection ability of the analyzer. Defined in seconds, the time is rounded up or down to cover a whole number of cycles. Figure 5.4 shows how rejection increases with time.

The integration time can be adjusted automatically, in accordance with the amount of noise present at the input and the statistical accuracy required for the measurement result. See Section 2.1.3.

5.2.1.2 DELAY

Delays the start of a measurement on the measure command. Typically, used with SWEEP. Allows the response of the item under test to settle after a change in drive.

Axion Exhibit 1024
Axion v. Agilent

5.2.1.3 *AUTO*

Auto integration. Selects an integration time in keeping with the interference on a selected input. Measurement continues, within the ∫ TIME period, until the standard deviation of the input data reaches a target value:

- **[off]**
  Auto integration off. Analyzer inputs measured over ∫ TIME.
- **[Long ∫ on V1]**
  Aims for a standard deviation of ±1% of reading ± 0.001% of full scale on analyzer VOLTAGE 1 input.
- **[Short ∫ on V1]**
  Aims for a standard deviation of ±10% of reading ± 0.01% of full scale on analyzer VOLTAGE 1 input.
- **[Long ∫ on V2]**
  Aims for a standard deviation of ±1% of reading ± 0.001% of full scale on analyzer VOLTAGE 2 input.
- **[Short ∫ on V2]**
  Aims for a standard deviation of ±10% of reading ± 0.01% of full scale on analyzer VOLTAGE 2 input.
- **[Long ∫ on I]**
  Aims for a standard deviation of ±1% of reading ± 0.001% of full scale on analyzer CURRENT input.
- **[Short ∫ on I]**
  Aims for a standard deviation of ± 10% of reading ± 0.01% of full scale on analyzer CURRENT input.

In each case, the standard deviation value can be accepted with 90% confidence. A failure to reach the required deviation value within the ∫ TIME is indicated by the message “82. AUTO INT. FAILED”.

To ensure that the standard deviation of all input data is equal to or less than one of the values stated above, select the input signal with the most interference for auto integration.

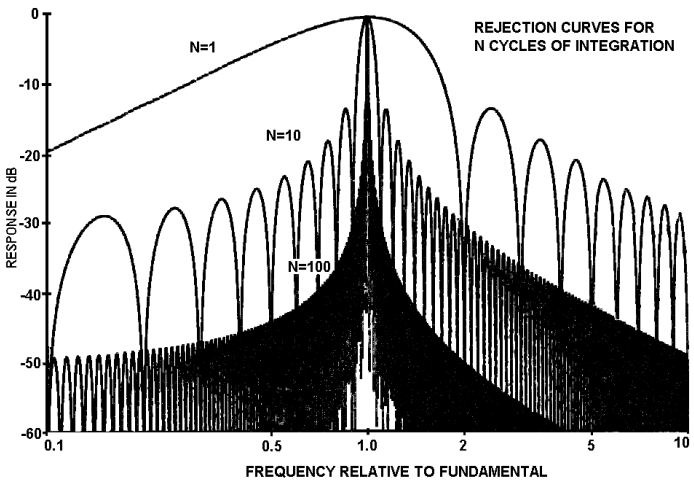

Figure 5.4 - Noise and harmonic rejection v cycles of integration

Axion Exhibit 1024
Axion v. Agilent

5.2.1.4 MODE

Selects a measurement mode suitable for the results to be displayed (see Section 4).

- **[normal]**
  Single measurement. Used for all displayed functions, except *r,t, r*(dB), *t*, and *auto circuit.*

- **[group delay]**
  Triple measurement. Used for the functions *r,t* and *r*(dB), *t*, whose prime purpose is to determine the transmission quality of filters. *Time t represents the delay between the frequencies F - n% and F+p%. F*, the generator output frequency, and the values *n* and *p* are all defined by the user. All other display functions, except *auto circuit*, may be derived from group delay measurements.

  The error incurred in a group delay measurement

$$= \frac{phase\ error\ (in\ \ deg\,rees)}{360\ \ x\ f_{span}}$$

$$where\ f_{span}\ =\ F(n+p)Hz$$

  This shows that the group delay error is inversely proportional to f_{span}. *To minimize the group delay error at the lower drive frequencies, increase the values of n* and *p* as the value of *F* is decreased.

- **[auto impedance]**
  Double measurement. Used primarily for the auto circuit function, but can also be used for any other function except *r,t* and *r*(dB),*t*.

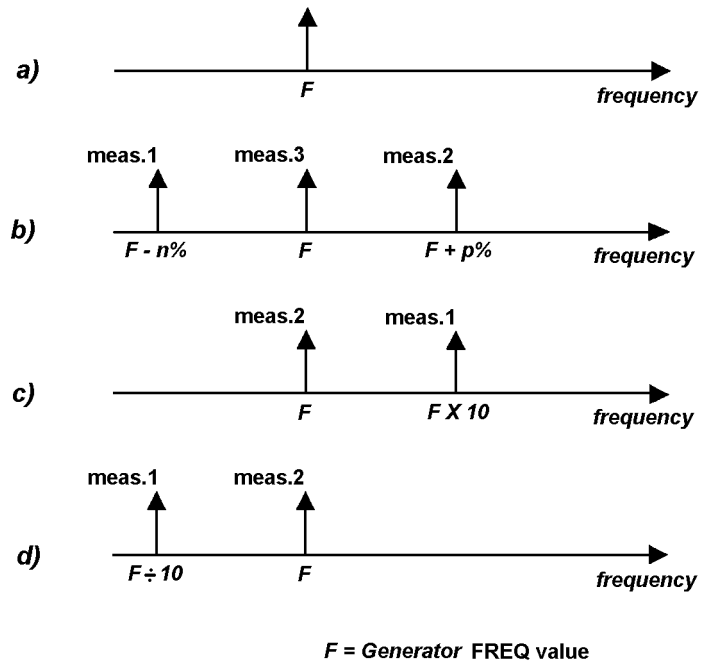

Figure 5.5 - Measurement modes: a) normal, b) group delay, c) auto impedance (F < 128Hz), d) auto impedance (F ‡ 128Hz)

Axion Exhibit 1024
Axion v. Agilent

5.2.2 [INPUT V1]

Parameters of the analyzer VOLTAGE 1 input.

5.2.2.1 RANGE

Auto ranging or a *fixed* range can be used:

- **[auto]**
  Auto ranging selects the most accurate range for the signal amplitude being measured. Each measurement starts on the most sensitive range. If an overload is detected the result is discarded and measurement restarts on the next range up; this procedure is continued until a valid result is obtained.

  Auto ranging should be used when the signal amplitudes being measured cover more than one input range, or are unpredictable.

- **[30mV]**
  Fixed range for signal amplitudes between 0V and 30mV.

- **[300mV]**
  Fixed range for signal amplitudes between 0V and 300mV.

- **[3V]**
  Fixed range for signal amplitudes between 0V and 3V.

The use of a fixed range avoids the range search time penalty incurred with auto ranging. Select the most sensitive range possible, to obtain the finest measurement resolution.

5.2.2.2 COUPLING

Coupling of the measured signal to the analyzer VOLTAGE 1 input.

- **[dc]**
  Dc coupling introduces minimum phase shift and should be used whenever possible, particularly on low frequency work.

- **[ac]**
  Ac coupling can be used to reject an unwanted dc component. This may allow a more sensitive input range to be selected.

Axion Exhibit 1024
Axion v. Agilent

5.2.2.3 INPUT AND OUTER

These settings select the internal connections between the Hi and Lo voltage inputs and the analyzer input amplifier:

a) INPUT = diff; OUTER = floating

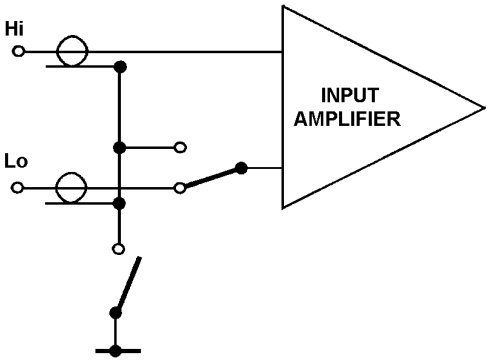

b) INPUT = diff; OUTER = grounded

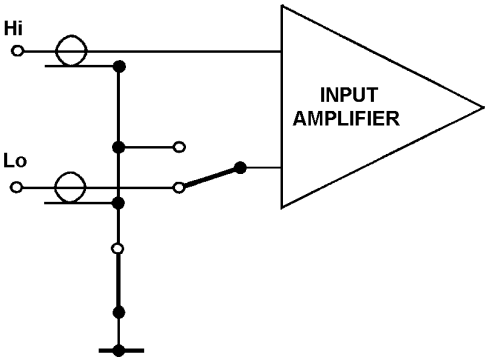

c) INPUT = single; OUTER = floating

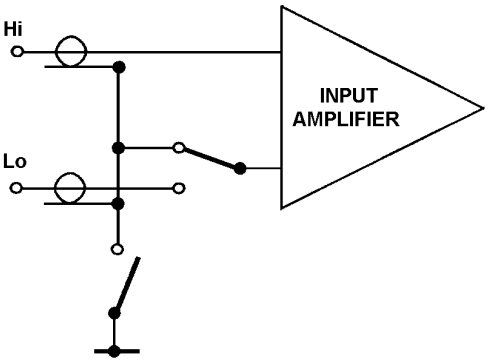

d) INPUT = single; OUTER = grounded

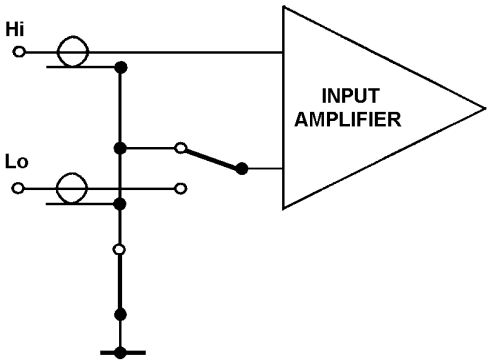

5.2.3 [INPUT V2]

Same parameters as for [VOLTAGE 1] , but applicable to the VOLTAGE 2 input.

Axion Exhibit 1024
Axion v. Agilent

5.2.4 [INPUT I]

Parameters of the analyzer CURRENT input.

5.2.4.1 RANGE

Auto ranging or a fixed range can be used:

- **[auto]**
  Auto ranging selects the most accurate range for the signal amplitude being measured. Each measurement starts on the most sensitive range. If an overload is detected the result is discarded and measurement restarts on the next range up; this procedure is continued until a valid result is obtained.

  Auto ranging should be used when the input signal amplitudes cover more than one range, or are unpredictable.

- **[6μA] to [60mA]**
  A fixed range provides for the measurement of signal amplitudes in the range:

  - 0 to 6μA,
  - 0 to 60μA,
  - 0 to 600μA,
  - 0 to 6mA,
  - 0 to 60mA,

  The use of a fixed range avoids the range search time penalty incurred with auto ranging. Select the most sensitive range possible, to obtain the finest measurement resolution.

5.2.4.2 COUPLING

Coupling of the measured signal to the analyzer CURRENT input.

- **[dc]**
  Dc coupling introduces minimum phase shift and should be used whenever possible, particularly on low frequency work.

- **[ac}**
  Ac coupling can be used to reject an unwanted dc component. This may allow a more sensitive input range to be selected.

Axion Exhibit 1024
Axion v. Agilent

5.3 SWEEP

SWEEP allows any one of the generator output parameters, *frequency*, *amplitude*, or *bias*, to be stepped through a range of settings, a new setting being used for each measurement.

5.3.1 [SWEEP]

Selection of sweep type, direction, and resolution.

5.3.1.1 ENABLE

Sweep type:

- **[off]**
  Sweep off.
- **[lin. freq]**
  Linear frequency sweep. Successive frequencies differ by a constant frequency value (Δ LIN).
- **[log. freq]**
  Logarithmic frequency sweep. Successive frequencies differ by a constant frequency ratio (Δ LOG).
- **[amplitude]**
  Amplitude sweep. Successive amplitudes differ by a constant value (Δ LIN).
- **[bias]**
  Bias sweep. Successive bias levels differ by a constant value (Δ LIN).

5.3.1.2 UP/DOWN

Sweep direction:

- **[up]**
  Sweep from minimum limit to maximum limit.
- **[down]**
  Sweep from maximum limit to minimum limit.

5.3.1.3 D LOG

Numeric entry which defines the number of measurement points for a [log. freq] sweep.

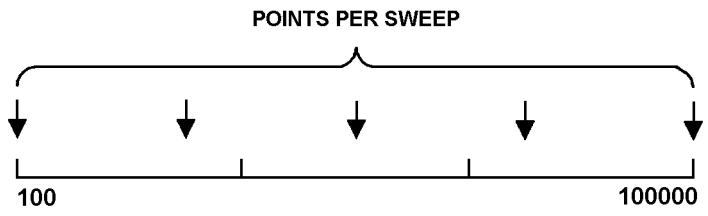

Fig 5.6 - Example of logarithmic frequency sweep: A LOG = 5 points per sweep (= 4 steps/sweep)

Axion Exhibit 1024
Axion v. Agilent

5.3.1.4 D LIN

Numeric entry which defines, for a [lin freq] sweep.

- **[pts/swp]**
  The number of points per sweep.
- **[unit/st]**
  The number of units per step. The “units” are Hz on frequency sweeps and volts or amps on amplitude or bias sweeps. (The step value need not be a sub-multiple of the sweep span.)

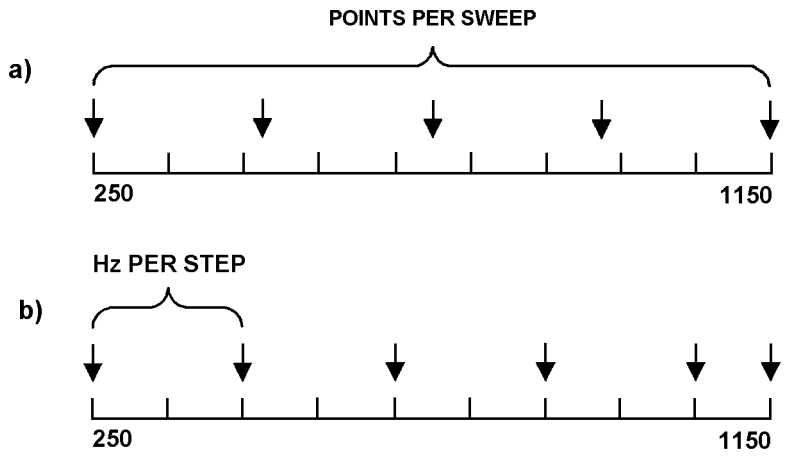

Figure 5.7 - Examples of linear frequency sweep:
a) D LIN = 5 points per sweep (= 4 steps/sweep);
b) D LIN = 200Hz per step.

5.3.2 [SWEEP LIMITS]

Selection of sweep limits for frequency, amplitude and bias.

5.3.2.1 FREQ

Frequency limits:

F MIN ( )
Minimum frequency, in the range 10μHz to 32MHz.

F MAX ( )
Maximum frequency, in the range 10μHz to 32MHz.

5.3.2.2 V. AMPL

Voltage amplitude limits:

V MIN ( )
Minimum amplitude, in the range: 0V to 3V ($f \leq$ 10MHz)
0V to 1V ($f >$ 10MHz)

V MAX ( )
Minimum amplitude, in the range: 0V to 3V ($f \leq$ 10MHz)
0V to 1V ($f >$ 10MHz)

Axion Exhibit 1024
Axion v. Agilent

5.3.2.3 V. BIAS

Voltage bias limits:

V MIN ( )
Minimum bias, in the range - 40.95V to +40.95V.

V MAX ( )
Maximum bias, in the range - 40.95V to +40.95V.

5.3.2.4 I. AMPL

Current amplitude limits:

I MIN ( )
Minimum amplitude, in the range:

0mA to 60mA (f ≤ 10MHz);
0mA to 20mA (f > 10MHz).

I MAX ( )
Maximum amplitude, in the range:

0mA to 60mA (fS 10MHz);
0mA to 20mA (f> 10MHz).

5.3.2.5 I. BIAS

Current bias limits:

I MIN ( )
Minimum bias, in the range -100mA to + 100mA.

I MAX ( )
Maximum bias, in the range -100mA to + 100mA.

Axion Exhibit 1024
Axion v. Agilent

5.4 DISPLAY

DISPLAY acts on the basic measurement data, obtained either from the analyzer or from the history file. These data are the amplitudes of the signals present at the V1, V2, and I inputs of the analyzer, and their phase relations. Various combinations of the data can be selected and the measurement results derived from them can be output in different forms. The history file can be accessed repeatedly to view the same data in many different ways.

5.4.1 DISPLAY

Selection of measurement results to be displayed and/or passed to the output ports. The display format is shown in Figure 5.8.

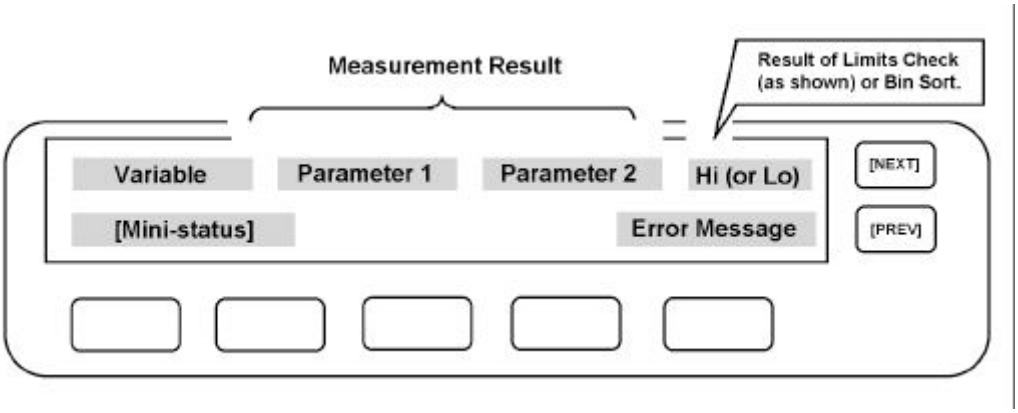

Fig 5.8 - Display format for measurement results

5.4.1.1 VARIABLE

The generator output parameter to be displayed as the *variable*:

- **[freq]**
  Generator output frequency.
- **[ampl]**
  Amplitude (rms) of ac component of generator output.
- **[bias]**
  Level (dc) of generator output.

5.4.1.2 RESULT

To display a specific result a choice of measurement *source* is offered first. Then, depending on the source entered, a choice of *coordinates* is offered. The full range of sources and coordinates is shown in Table 5.1.

Axion Exhibit 1024
Axion v. Agilent

Table 5.1 - Measurement Source and Displayed Coordinates

SOURCE	→COORDS→							
[Z1=VI/I]	Z,θ				**[L(orC),R]**	L(orC),Q	L(orC),D	R,X
Y1=I/V1	Y,θ				**[L(orC),R]**	L(orC),Q	L(orC),D	G,B
Z2=V2/I	Z,θ				**[L(orC),R]**	L(orC),Q	L(orC),D	R,X
Y2=I/V2	Y,θ				**[L(orC),R]**	L(orC),Q	L(orC),D	G,B
FUNCTION ( )	**[r,θ]**	r(dB),θ	r,t*	r(dB),t*	L(orC),R	L(orC),Q	L(orC),D	a,b
V1	r,θ	**[r(dB),θ]**	r,t	r(dB),t				a,b
V2	r,θ	**[r(dB),θI**	r,t	r(dB),t				a,b
V1/V2	r,θ	**[r(dB),θ]**	r,t	r(dB),t				a,b
V2/V1	r,θ	**[r(dB),θ]**	r,t	r(dB),t				a,b
I	**[r,θ]**							a,b

*For time scale measurements use the analyser 'group delay' mode. (See Section 2.1.4.)

5.4.1.3 PHASE

Phase presentation:

- **[normal]**
  Phase presented as an angle between + 180° and ~180°. Angles > ± 180° are *wrapped* to obtain an equivalent *relative* angle. A plot of wrapped phase results relating to a system at resonance could appear thus:

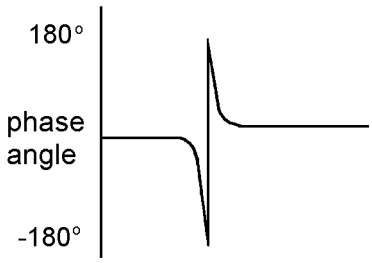

- **[unwrapped]**
  Phase presented as an *absolute* angle between 0° and ± n°. A plot of *unwrapped* phase results from the same basic data as the normal plot above would appear thus:

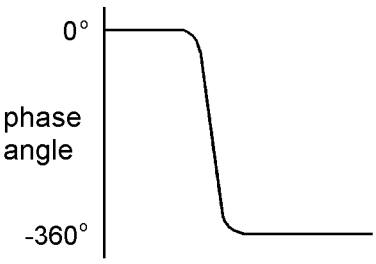

Axion Exhibit 1024
Axion v. Agilent

5.4.1.4 CIRCUIT

The form of the circuit being measured, defined for SOURCE set to Z1, Y1, Z2, or Y2:

- **[parallel C,R]**
  Capacitor and resistor in parallel.

- **[auto]**
  With MODE in the ANALYSIS menu set to auto impedance the instrument automatically ascertains the form of the circuit being measured and displays component values for that form: a “p” or an “s’’ is displayed also, to indicate a parallel or series circuit. Use auto if the form of the circuit is not known.

  Note that small phase components (resistors, for example) may give a confusing reading; noise can change a series R,L result to a series R,C result:

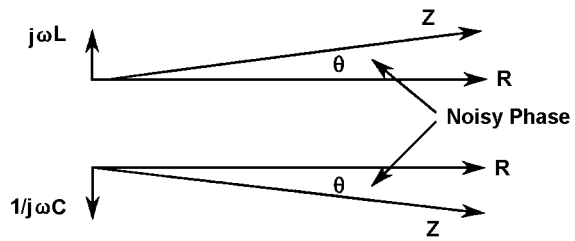

- **[series L,R]**
  Inductor and resistor in series.

- **[series C,R]**
  Capacitor and resistor in series.

- **[parallel L,R]**
  Inductor and resistor in parallel.

5.4.1.5 ALTERNATIVE CIRCUIT FORMS

The CIRCUIT setting can be used to find the equivalent component values of an alternative circuit form. Simply select the required form and read the component values from the display, using the L (or C) coordinates (see Section 5.4.1.2 above). For series to parallel, or parallel to series conversions the equivalent values are valid for the frequency of measurement only.

Axion Exhibit 1024
Axion v. Agilent

5.5 PLOTTER

Measurement results can be plotted on a suitable digital plotter. The PLOTTER menu gives a choice of graphics language, plot size and trace, and on/off control of text, grid and axes.

5.5.1 [PLOTTER]

Trace, text, grid, axes, and graphics language selection.

5.5.1.1 MODE

Type of trace:

- **[vector]**
  Adjacent measurement results connected by a straight line, e.g.

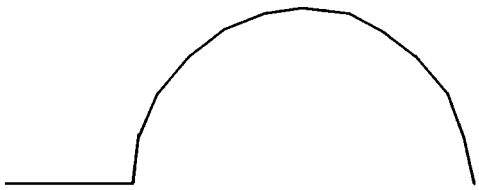

- **[point]**
  Measurement results plotted as separate points, e.g.

5.5.1.2 TEXT

Plot annotation:

- **[on]**
  X and Y axes annotated with minimum and maximum values, items, units (if appropriate), title and time.

- **[off]**
  Results plotted without annotation.

5.5.1.3 GRID

Selects grid on or off; for divisions along the X and Y axes.

Axion Exhibit 1024
Axion v. Agilent

5.5.1.4 AXES

On/off control of text, grid and axes:

- **[off]**
  Results alone are plotted; no text, grid or axes.
- **[on]**
  Depending on the TEXT and GRID selections, plots may be made in the following styles:

a) TEXT off, GRID off,

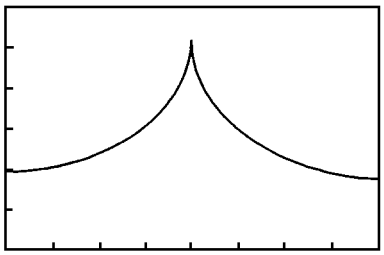

b) TEXT on, GRID off,

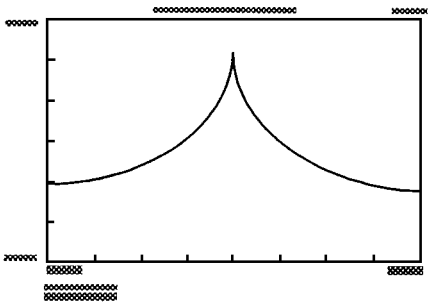

c) TEXT off, GRID on,

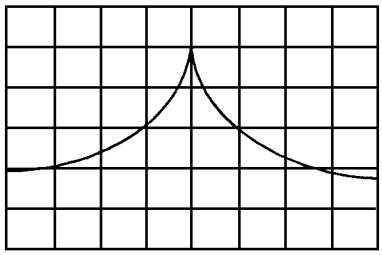

d) TEXT on, GRID on,

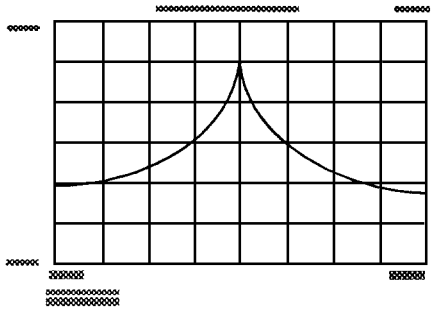

5.5.1.5 DEVICE

Plotting device:

- **[GPIB-HPGL]**
  Device using the Hewlett-Packard graphics language.
- **[GPIB- ESGL]**
  Device using the Enertec Schlumberger graphics language.

5.5.2 [PLOTTER SCALING]

Choice of plot size:

5.5.2.1 SIZE

Standard size or scaled size.

- **[A4] [A3]**
  Standard plot sizes.
- **[scaled]**
  Plot size, aspect ratio and position defined by X-MIN, Y-MIN, X-MAX, Y-MAX. See Section 11, for VERNIER method of setting up the scaled graph size.

Axion Exhibit 1024
Axion v. Agilent

5.5.2.2 X-MIN, Y-MIN, X-MAX, Y-MAX

Coordinates which define the plotting field, as shown in Fig 5.11. The coordinates can be set in the range 0 to 32000 units. One unit = 0.025mm, measured from the reference origin.

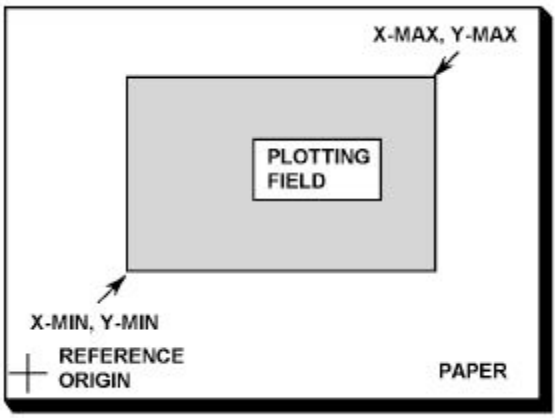

Figure 5.9 - Coordinates of the plotting field

5.5.3 [PLOTTER TITLE]

A user-defined title containing up to twenty five characters, alpha and numeric, can be entered. This title appears at the top of the plotting field.

OLD Displays the present title, e.g.

```
[WXYZABCDE]        <Freq Response Test No 5_ >

    <-        ->      COPY      <--       -->
```

This title can now be edited, if required. This is done by overwriting the original characters. (There is no character insertion facility.)

NEW Displays a blank title space, for the entry of a new title.

```
[WXYZABCDE]        <_                          >

    <-        ->      COPY      <--       -->
```


Axion Exhibit 1024
Axion v. Agilent

5.5.3.1 TITLE ENTRY

Characters are copied from the group in square brackets in the top left hand corner of the display. For each character to be copied the procedure is:

1. Select the group in which the character appears. Four different groups can be selected with NEXT or PREV:

   [WXYABCDE] upper case alpha characters,

   [SPACE] a space character,

   [ ] , . :1 2 3 4 5] numeric and miscellaneous characters,

   [w x y z a b c d e] lower case alpha characters.

2. Select the character for copying by aligning it with the flashing cursor. To do this, move the selected group to the left or right by pressing the appropriate arrow key (on the left-hand side), e.g.

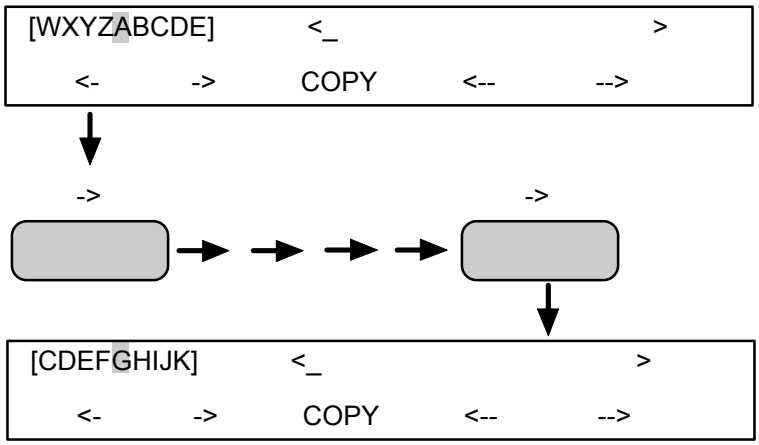

3. Copy selected character into title:

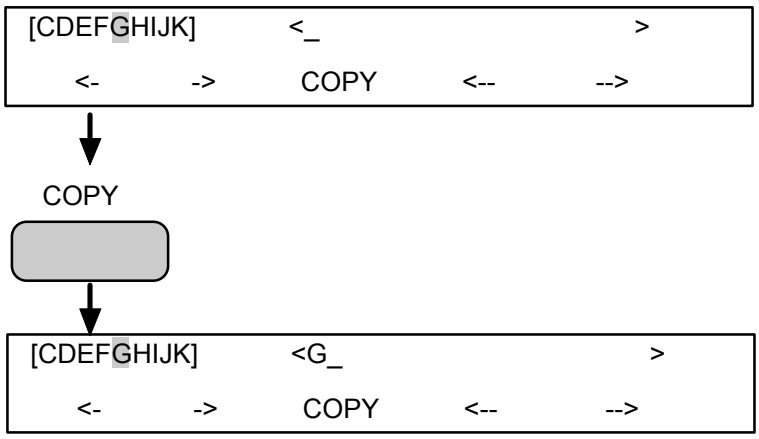

Axion Exhibit 1024
Axion v. Agilent

4. Repeat steps 1 to 3 until complete title is copied, then ENTER it.

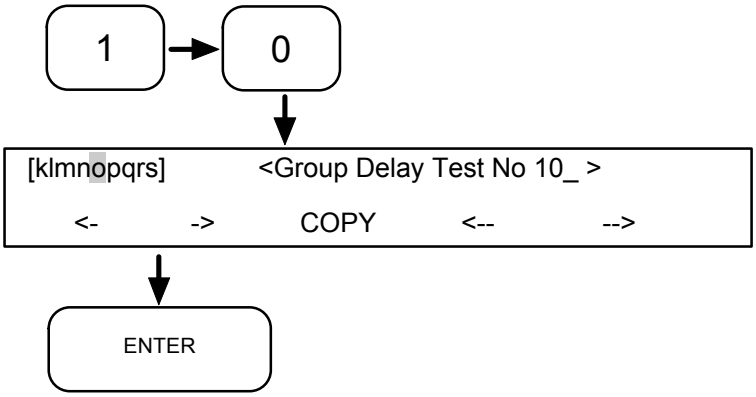

Note that numbers may be keyed in from the keypad. Spaces may be created in a blank title space simply by moving the cursor with the right-hand "-->" key.

5.5.3.2 TITLE EDIT

The title is edited by overwriting the character(s) to be changed. The procedure is:

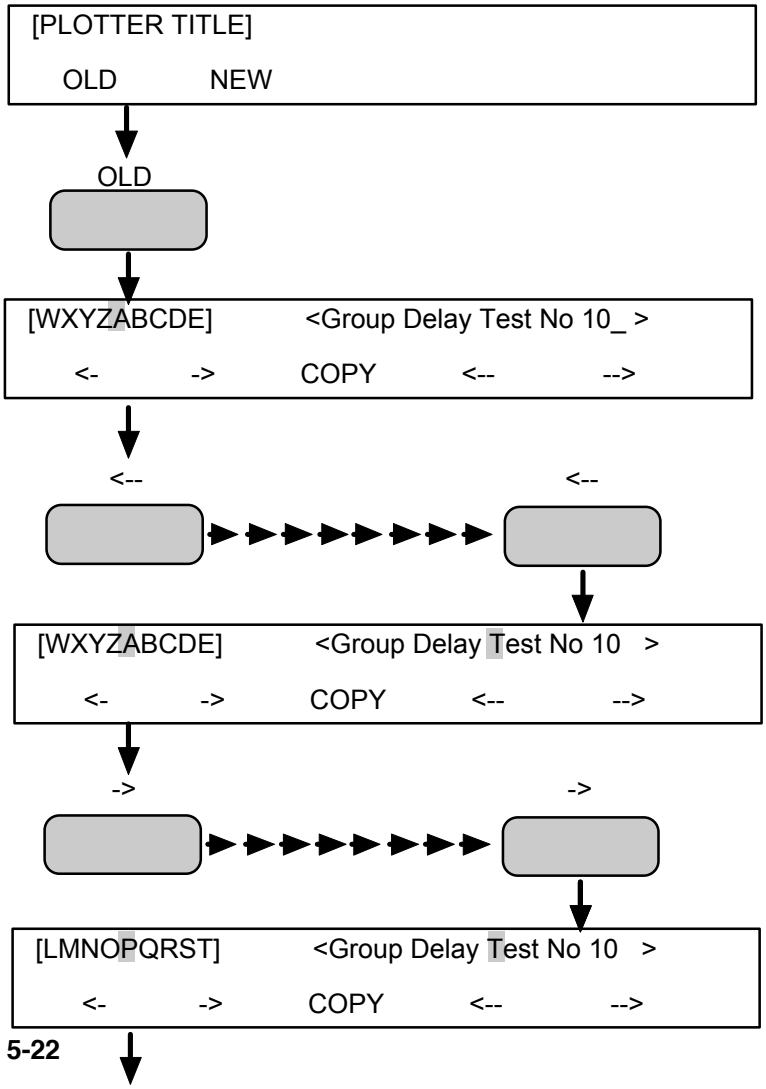

Select the "PLOTTER TITLE" menu...

...and press the "OLD" soft key...

...to display the present plotter title.

Then, using the "<--" key, align the title cursor with the first character to be changed...

...which, in the present example, is the letter "T" in "Test". (notice that there are now two flashing cursors; one to show the character to be changed and the other to show the character that is to replace it.)

The aim in this example is to change the word "Test" to "Plot" so, using the "->" (or "<-") key

Align the cursor in the square brackets with the letter "P".

Axion Exhibit 1024
Axion v. Agilent

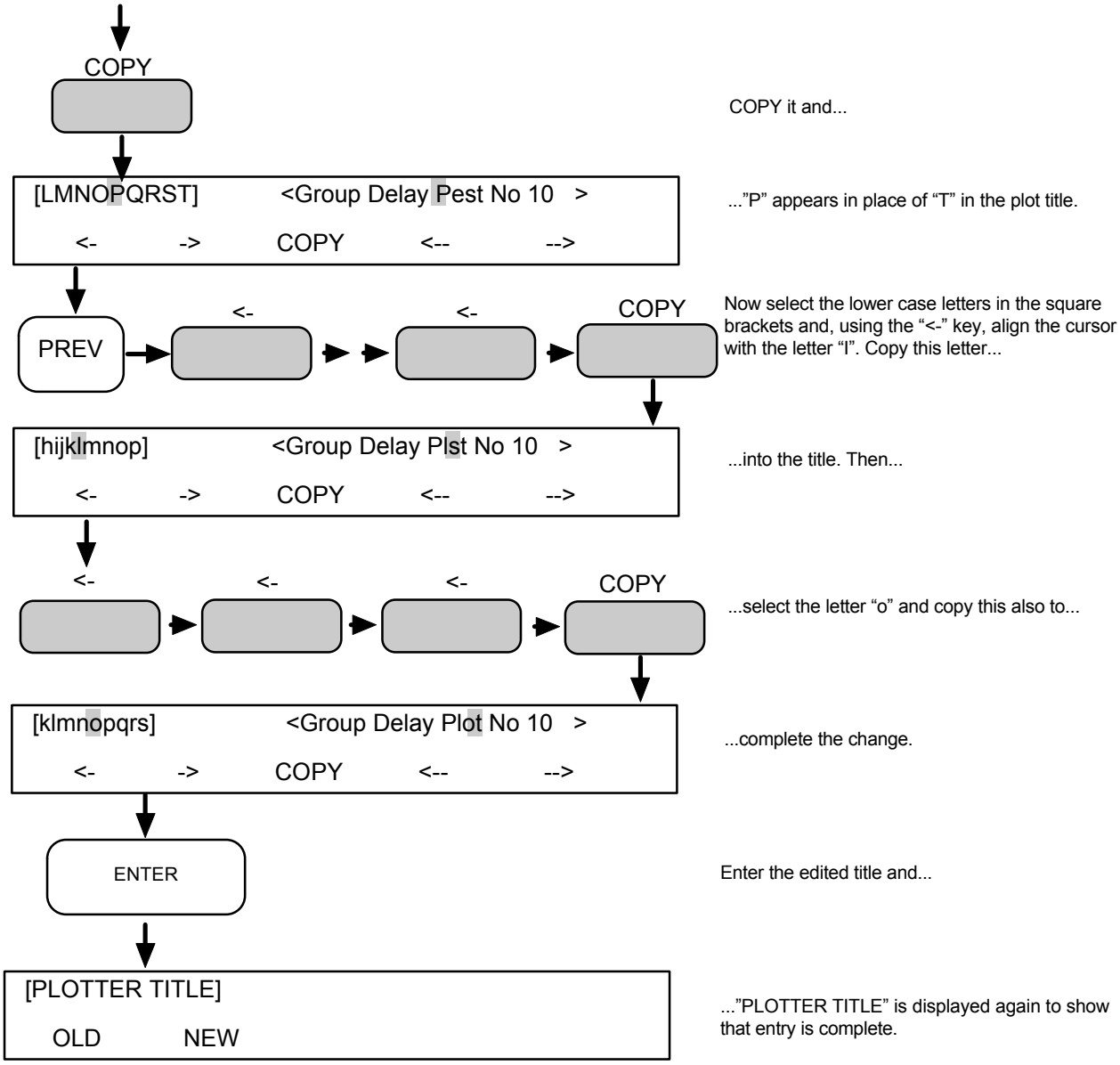

5.6 PLOT

Direct action. Outputs data in the history file to the GPIB plotter. The data source and co-ordinates are selected from the DISPLAY menu and scaling values may be selected from SCALE/LIMITS.

The same data can be plotted in many different ways by varying the PLOTTER AXES settings.

Axion Exhibit 1024
Axion v. Agilent

5.7 PLOTTER AXES

The displayed *variable* and the two result parameters, *par 1* and *par 2,* can be assigned individually to any of the plotter axes. The relationship between displayed and plotted results for the default plotter axes settings is shown in Figure 5.10.

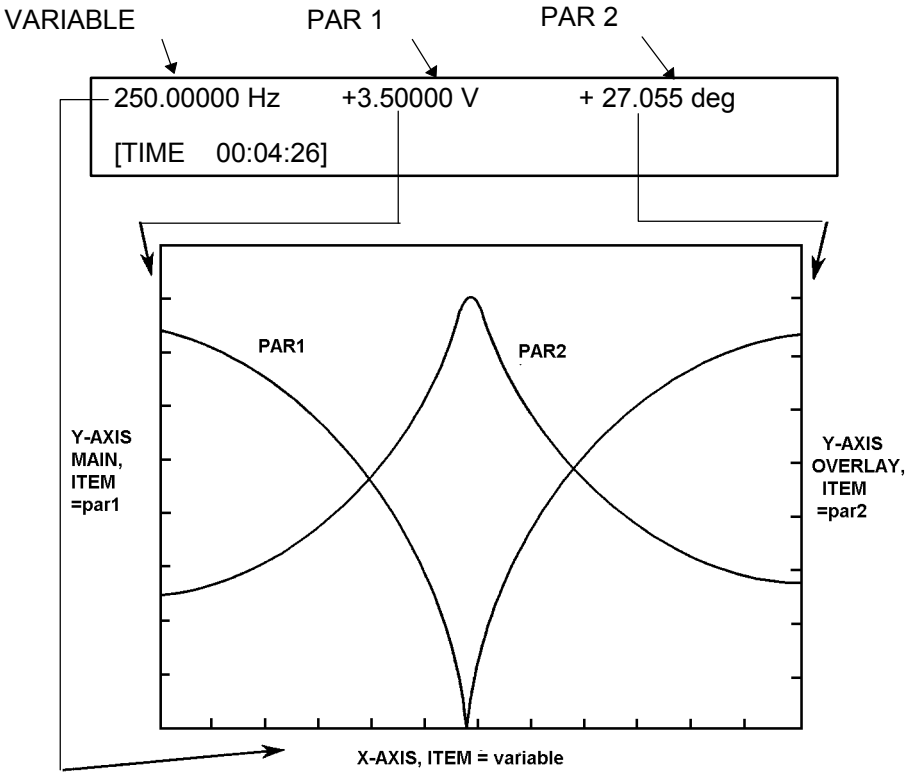

Figure 5.10 - Relationship between displayed and plotted results (default ITEM settings)

5.7.1 [PLOTTER X-AXIS]

X-axis definition, with the control parameters *item, limits, lin/log,* and *pen.*

5.7.1.1 ITEM

The item to be plotted along the X-axis. Selectable from *variable, par 1,* and *par 2*.

5.7.1.2 LIMITS

The minimum and maximum values of the X-axis. These values can be set automatically or manually, as required.

- **[auto]**
  Maximum and minimum values of the X-axis are set automatically, in accordance with the minimum and maximum values measured in a sweep. This gives the best plot resolution. (There is a brief delay, during which the plot limits are calculated, before the plot starts.)

- **[manual]**
  Maximum and minimum values of the X-axis are set manually.

Axion Exhibit 1024
Axion v. Agilent

5.7.1.2.1 MINIMUM and MAXIMUM

These two settings define the full-scale range of an X-coordinate, when LIMITS is set to *manual.* A similar pair of values is defined for the Y-axes and the overall effect is as shown in Figure 5.11.

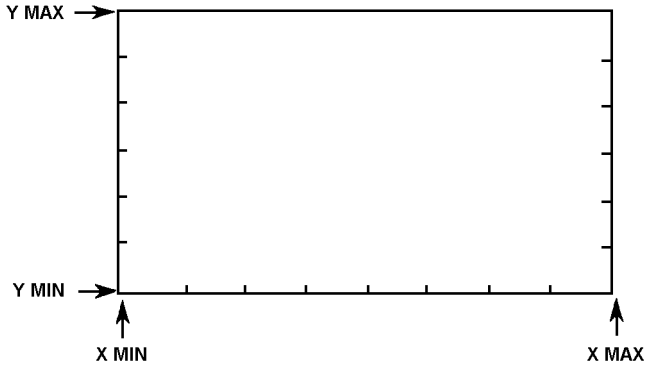

Figure 5.11 - Minimum and maximum values of the plot scale

5.7.1.3 LIN/LOG

Scaling of plotter X-axis.

- **[auto]**
  Plotter X-axis scaling set automatially. Log scaling is selected for *log f sweeps, whilst linear scaling is selected for all other sweeps (including amplitude* and *bias* sweeps).
- **[linear]**
  Linear X-axis scaling.
- **[log]**
  Logarithmic X-axis scaling. (Note that the limit values must be >0 for log limits to be allowed.)

5.7.1.4 PEN

Pen selection, for multi-pen plotters. A pen number is entered.

5.7.2 [PLOTTER Y-AXIS MAIN]

Same parameters as for X-axis, but applicable to the Y axis.

5.7.3 [PLOTTER Y-AXIS OVERLAY]

Same parameters as for X-axis, except for ITEM and LIMITS, but applicable to the Y overlay axis.

ITEM in the Y-axis overlay menu has an *off* setting. This is selected when the overlay plot is not wanted.

LIMITS in the Y-axis overlay menu has a *same as main* setting. This gives the same limits as for the Y-axis.

Axion Exhibit 1024
Axion v. Agilent

5.7.4 PLOT TYPES

The ability to assign any display item to any plot axis allows a wide variety of plot types to be set up.

A *Bode* plot, for example, is obtained with the settings

- DISPLAY [COORDINATES]: [r(dB), θ]
- PLOTTER X-AXIS: [variable]
- PLOTTER Y-AXIS: [par 1]

This gives a Bode plot of amplitude r(dB) against frequency. If ITEM is set to [par 2] in the plotter Y-axis overlay menu an overlaid plot of phase angle θ against frequency is obtained also.

For the same data, a *Nyquist* plot can be obtained with the settings

- DISPLAY [COORDINATES]: [a,b]
- PLOTTER X-AXIS: [par 1]
- PLOTTER Y-AXIS: [par 2]

Examples of typical Bode and Nyquist plots are shown in Figure 5.12.

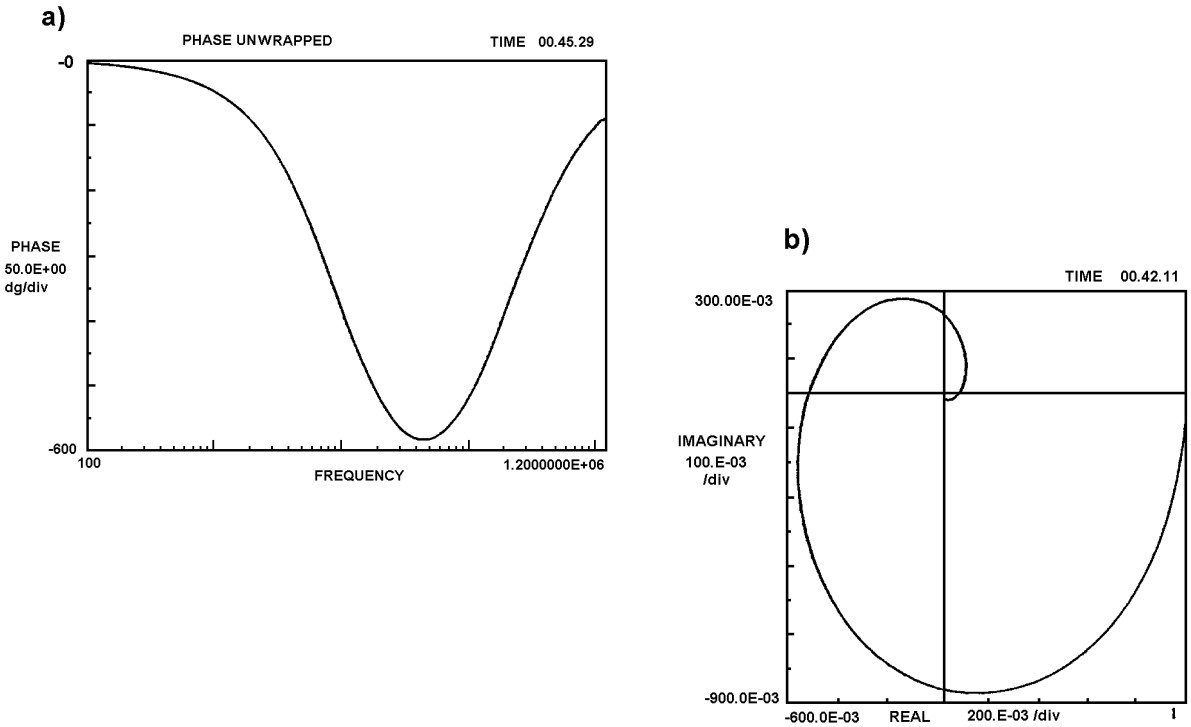

Figure 5.12 - Plot examples: a) Bode plot, b) Nyquist plot

Axion Exhibit 1024
Axion v. Agilent

5.8 DATA OUTPUT

DATA OUTPUT selects:

- the data output ports,
- the data to be output, and
- the data format.

5.8.1 [DATA OUTPUT]

As well as being displayed, the measurement results may be output through any combination of the RS423 port, the GPIB port, and the history file.

The data output facilities are listed in Table 5.2. Each output stream may not only be switched *on* or *off,* but can be restricted to data of interest with the *pass* or *fail settings. The dump* modes provide compressed data for computers and similar equipment. A [plotter] setting for the GPIB allows data to be output to a plotter as measurements occur.

Table 5.2 Data Output Facilities

Settings Available: RS-423	GPIB	FILE	Facility
D	D	➢	**[off]** No data output.
➢	➢	D	**[all]** All data are output, but, with LIMITS on, any off-limit data are indicated by 'Hi' and 'Lo'.
➢	➢	➢	**[fail]** Output restricted to *fail* data. No data are output if LIMITS is off.
➢	➢	➢	**[pass]** Output restricted to *pass* data if LIMITS is on. All data output if LIMITS is off.
➢	➢		**[dump]** The measurement source data are output in a compressed form, suitable for storage or for computer processing.
➢	➢		**[dump all]** The analysis data from all input channels, and all variables, *frequency, amplitude,* and *bias,* are output in compressed form.
	➢		**[plotter]** Data are output to the GPIB plotter, as measurements occur. (The plotter limits for this facility *must* be entered manually, otherwise it will not work.)

D = default setting; ➢ = setting available

Axion Exhibit 1024
Axion v. Agilent

5.8.1.1 HEADING

Headings can be included in the data that are output to RS423 and the GPIB.

Headings are intended for use with printers and VDUs, when data are presented in tabular form. A heading is assigned to each column to indicate the data type, units, etc.

- **[off]**
  No headings are output.
- **[on]**
  Headings are output to:

  a) the RS423 port, if MODE is set for [printer].

  b) the GPIB port, if Talk Only is selected.

  Headings are output when:

  a) HEADING [on] is entered, regardless of whether [on] was selected previously or not,

  b) a change is made to any control parameter which invalidates existing headings.

5.8.2 [GPIB CONFIGURE]

GPIB parameters. (The device address, Talk Only, and the input command terminator are set on a rear panel switch. PAR POLL, P SENSE, and SER POLL are set by remote command only.)

5.8.2.1 TERM

Output terminator. The character, or characters, with which each measurement result is terminated:

- **[cr lf]**
  Carriage return and line feed.
- **[cr lf + EOI]**
  Carriage return, line feed and the signal EOI (end or identify).
- **[cr]**
  Carriage return.
- **[cr + EOI]**
  Carriage return and EOI.

5.8.2.2 SEP.

Output separator. The character with which output data fields are separated:

- **[commal**
  Comma separator.
- **[terminator]**
  Separator same as terminator.

Axion Exhibit 1024
Axion v. Agilent

5.8.3 [RS423 CONFIGURE]

RS423 parameters. Note that the RS423 port is intended mainly for data output to a printer, VDU, etc. Use it for *limited* remote control of the instrument *only if you are fully conversant with RS423 protocol.*

5.8.3.1 MODE

Choice of output data format, for controller or printer:

- **[printer]**
  Spaced field format, suitable for printers having a minimum of 80 characters per line.
- **[controller]**
  Condensed format, suitable for a controller.

5.8.3.2 ECHO

Echoes back to an external device each character received from it. Typically used with keyboard type devices operating from RS423 to obtain a copy of the data sent. Refer to the device handbook to see if an echo is needed or not.

- **[on]**
  echo applied.
- **[off]**
  echo disabled.

5.8.3.3 TERM.

Output terminator. The character, or characters, with which each measurement result is terminated:

- **[cr lf]**
  Carriage return and line feed.
- **[cr lf + null]**
  Carriage return, line feed and four null characters.
- **[cr]**
  Carriage return.
- **[cr + null]**
  Carriage return and four null characters.

5.8.3.4 SEP.

Output separator. The character with which output data fields are separated:

- **[comma]**
  Comma separator.
- **[terminator]**
  Separator same as terminator.

Axion Exhibit 1024
Axion v. Agilent

5.8.3.5 XOFF/XON

Transmit off/transmit on software handshake facility.

- **[enable]**
  handshake enabled; XOFF and XON used.

- **[disable]**
  handshake disabled; XOFF and XON not used.

  This selection governs the use of the XON/XOFF code by the instrument, i.e. whether or not the instrument outputs the command to a device sending data to it.

  The instrument will always respond to an XON/XOFF command from a controller.

5.8.4 [FILE CONFIGURE]

History file parameters.

5.8.4.1 FORMAT

Measurements to be filed. Specified according to measurement mode.

- **[normal]**
  File set for *normal* measurements.

- **[group delay]**
  File set for *group delay* measurements.

The history file must be cleared before changing the *format.*

5.8.4.2 CLEAR

History file clear function, auto or manual.

- **[auto]**
  File cleared automatically, at start of every sweep.

- **[manual]**
  File cleared manually, from VIEW FILE menu.

5.8.4.3 STATS

The results from which statistics are to be derived:

- **[par 1]**
  Statistics computed from Parameter 1*.

- **[par 2]**
  Statistics computed from Parameter 2*.

  *Displayed parameter, see Section 4, Display.

Axion Exhibit 1024
Axion v. Agilent

5.9 SCALE/LIMITS

Under SCALE/LIMITS five functions are available:

- Swept measurements may be *normalized* to separate the results of interest from background data.
- Effect - of stray capacitance and inductance on the measurement results may be compensated for with the *null* facility.
- Individual measurement results may have a user-defined scaling function applied to them. The scaling function, set from the scale/limits menu, is applied when FUNCTION is selected as the display SOURCE; see Section 4.1.2.
- A limits check may be applied, which compares each measurement result against user-defined limits. This facility and *normalize* may be used together, for a profiled limits check.
- Electrical components may be sorted.

5.9.1 [SCALING]

On/off control of NORMALIZE and NULL, and selection of CONSTANTS and FUNCTION for measurement scaling.

*5.9.1.1 NORM.**

Normalize on/off/evaluate:

- **[off]**
  Normalize not applied.
- **[on]**
  The measurement results are divided by normalize values, the normalize values having been previously evaluated.
- **[evaluate]**
  First set up the sweep parameters and then enter [evaluate]. A sweep is actioned and the normalize values thus obtained are stored. On completion, [on] is selected automatically and the results from any further sweeps are divided by the normalize values.

  Changing the sweep parameters after evaluate has been entered invalidates the normalize values. Commanding a sweep with normalize [on] then evokes the message, “29. RENORMALIZE”, until [evaluate] is entered again.

  Note that the maximum number of points/sweep selectable for normalize [on] or [evaluate] is 243 for the normal analyzer mode and 192 for group delay.

* DATA O/P: FILE CONFIGURE CLEAR must be in [auto] mode when normalize [on] or [evaluate] is used.

Axion Exhibit 1024
Axion v. Agilent

5.9.1.2 NULL*

Null on/off/evaluate:

- **[off]**
  Null not applied.

- **[on]**
  Effect of stray inductance and capacitance on measurement results is removed in accordance with previously evaluated null values.

- **[evaluate]**
  Starts the null procedure, which is:

  1. In accordance with the displayed message, insert a shorting bar.
  2. Press the PAUSE/CONT key.
  3. Wait for the message “Remove shorting bar.” then do so.
  4. Press the PAUSE/CONT key.

When nulling is complete NULL is set to [on] automatically.

Nulling may be used with either single-point -or sweep measurements. Set the input and sweep parameters before selecting [evaluate].

Whilst the null values are being evaluated some of the generator and analyzer control parameters are set temporarily to settings which may differ from those selected by the user. However, a return is made to the user-defined settings when null evaluation is complete.

* DATA O/P: FILE CONFIGURE CLEAR must be in [auto] mode when null [on] or [evaluate] is used.

5.9.1.3 CONSTS

Nine user-defined constants, for use with scaling facility.

- **[a, b]**
  Scaling by Cartesian coordinates.

- **[r, θ]**
  Scaling by polar coordinates.

Scaling constants are numbered from 1 to 9 inclusive. This number is entered by the user when CONSTS is selected.

The entry of [a, b] or [r, θ] prompts the entry of user-defined coordinate values.

5.9.1.4 FUNCT

User-defined scaling function. Eighteen different functions may be entered, and are numbered by the user on entry. Functions 1 to 9 are stored in the battery sustained memory and functions 10 to 18 are stored in the non-volatile memory.

New functions are *learnt.* Previously entered functions no longer needed may be *cleared.*

The use of the scaling function is described in detail in Chapter 10, “Measurement Scaling”.

Axion Exhibit 1024
Axion v. Agilent

LEARN displays a choice of variables and operators which the user may use to build up a scaling function. To ensure correct syntax, only valid choices are shown.

CLEAR deletes the specified function, ready for the entry of a new function under the same number.

5.9.1.5 DEV D

Computes the deviation of the present result from a stored result.

- **[off]**
  Deviation facility not selected.
- **[Δ]**
  You are invited to enter the number of a stored result. When this is done the display shows, for each measured result, the difference between the result and the stored value. An asterisk (*) is displayed also, to show that the displayed value is not the measured result.
- **[Δ%]**
  Same procedure as for [Δ]. With the [Δ%] setting, however, the difference between stored and measured results is expressed as a percentage value.

5.9.2 [LIMITS]

Displayed parameter limits check.

ITEM Parameter to be checked:

- **[par 1]**
  Parameter 1.
- **[par 2]**
  Parameter 2.

  Parameter 1 and Parameter 2 are the coordinates of the displayed measurement result. (See Section 4.)

LIMITS The LOWER LIMIT and the UPPER LIMIT against which the selected parameter is to be checked.

5.9.3 [BINSORT A]

Note: *The Binsort option is no longer available from Solartron. This section is retained for reference only.*

The [BINSORT A] menu allows you to choose:

- the sorting method, *continuous, fixed count,* `or` *random,*
- the item to be sorted,
- the number of the tolerance bands, or *bins*,
- when to stop the sort.

Continued overleaf....

Axion Exhibit 1024
Axion v. Agilent

5.9.3.1 ENABLE

The sorting method. This may be chosen from:

- **[off]**
  No sorting done.
- **[continuous]**
  Every component sorted.
- **[fixed count]**
  Every *n*th component sorted. (n = STEP SIZE.)
- **[random]**
  Random sort, within a maximum step size.

5.9.3.2 ITEM

The display parameter sorted.

- **[par1]**
  Parameter 1 sorted.
- **[par2]**
  Parameter 2 sorted.

On entry of the display parameter setting you are invited to enter the *parameter value.* This is the nominal value to which the tolerance values, specified under BINS, refer.

5.9.3.3 BINS

First you specify the number of bins into which the components are to be sorted. Then, for each bin, you define the MIN% and MAX% tolerance values, each of which refers to the parameter value entered under ITEM. A physical set of component bins may be used to store the components as their corresponding bin number is displayed.

5.9.3.4 STOP

Defined conditions for stopping test.

- **[off]**
  Test stopped only when ENABLE [off] is selected.
- **[on]**
  Measurements stopped after a number of tests have been made. This number is defined by the user.

5.9.4 [BINSORT B]

Note: *The Binsort option is no longer available from Solartron. This section is retained for reference only.*

The [BINSORT B] menu allows you to choose the parameters for operating a component test machine. These are:

- the number of attempts to be made to get a “pass” result.
- the machine drive levels,
- the machine drive logic.

Axion Exhibit 1024
Axion v. Agilent

5.9.4.1 RETRY

Enter the maximum number of times each component is to be measured in an attempt to obtain a pass result.

5.9.4.2 LEVELS

The voltage levels required to drive the component test machine.

- **[+5V]**
  Drive levels are +5V and 0V.
- **[+18V]**
  Drive levels are +18V and 0V.

5.9.4.3 LOGIC

The logic sense required to drive the component test machine.

- **[negative]**
  Negative logic, i.e. 0V = ‘1’ and +5V (or + 18V) = ‘0’.
- **[positive]**
  Positive logic, i.e. 0V = ‘0’ and +5V (or +18V) = ‘1’.

5.9.5 BINSORT FUNCTIONS

Note: *The Binsort option is no longer available from Solartron. This section is retained for reference only.*

To perform the functions defined under BINSORT A and BINSORT B the instrument must be fitted with the binsort option card. The following hierarchy of binsort functions is then available:

SWEEP With a sweep enabled, each component tested is subjected to a sweep and the bin selected is related to the worst case result. In this mode a SINGLE command results in a single sweep and a RECYCLE command results in repeated sweeps. This function encompasses the LIMIT and NORMAL functions described below.

LIMIT A limit check can be selected for one display parameter whilst the other parameter is used for sorting. A fail result from the limits check fails the component, regardless of the binsort result. The LIMIT function encompasses the NORMAL function described below.

NORMAL A binsort check is applied to each measurement result, for a selected number of “bins” (32 max.). Each bin corresponds to a specified tolerance band.

The value of the displayed parameter to be sorted is compared with the bin limits (which define the tolerance bands) and the number of the bin whose tolerance fits the sorted parameter is displayed. Also, an appropriate bin select line is asserted: this may be used to energise the appropriate trap on a mechanical binsorter or, with manual sorting, to illuminate a lamp on the appropriate acceptor bin.

Axion Exhibit 1024
Axion v. Agilent

If the value of the sorted parameter is outside all specified tolerance bands then “99” is displayed to signify that the component has failed. The identity of the bin select line asserted is one greater than that of the number of bins. This line may be used to energise the fail trap on a mechanical sorter or, with manual sorting, to illuminate the fail bin.

5.9.5.1 BINSORT CONNECTIONS

The way to connect the instrument to a mechanical binsorter will be described in the binsorter manual.

Nulling with a binsorter should be done at the component test contacts.

5.9.5.2 EFFECT OF “BREAK” COMMAND

If “break” is commanded during a binsort the instrument remembers the point at which it was stopped and restarts from that point. The “stop on” value* which is displayed on sort completion includes the number of tests made before break was commanded.

*Number of components tested, see Section 9.3.4.

5.9.6 PROGRAM KEYSWITCH

The setting of the PROGRAM keyswitch on the rear panel determines the use of the non-volatile memory for scaling functions (see Section 9.1.4). Two switch positions are used:

a) SUPERVISOR	A scaling function may be stored in, or recalled from, any location, from 1 through 18. All locations may be cleared. In SUPERVISOR mode the instrument takes several seconds to initialize.
b) NORMAL	A scaling function may be recalled from any location, but may be stored only in locations 1 through 9. Only locations 1 through 9 may be cleared.
c) OPERATOR	Reserved for future use.

To set the instrument into the supervisor or normal mode, turn the key to the appropriate position and command “BREAK”.

To protect the contents of the non-volatile memory, operate the instrument in the normal mode whenever possible.

Axion Exhibit 1024
Axion v. Agilent

5.10 VIEW FILE

VIEW FILE acts on the basic measurement data stored in the history file. The form of the output results is selected from the DISPLAY menu (see Section 4).

5.10.1 [VIEW FILE]

DISPLAY Displays file location #1. Use the [DISPLAY FILE] menu to go to other file locations.

LIST On entry, each file location is output in quick succession. This facility is intended for sending filed data to an external device, via RS423 or the GPIB.

LIST may also be used for updating the statistics readings: see Section 12.2.4.

CLEAR Erases the file contents and displays '40. FILE CLEARED'.

5.10.2 [DISPLAY FILE]

When DISPLAY is selected, in the [VIEW FILE] menu, file location #1 is displayed. Other file locations are accessed as follows:

- **BOF**
  Beginning of file. (Location 1)
- **EOF**
  End of file. (The highest numbered location containing a result)
- **NEXT**
  Next location. (Location n + 1)
- **PREV**
  Previous location. (Location n - 1)
- **LINE**
  Location *n.*

5.10.3 FILE SIZE

The number of results that the history file will hold depends on which analyzer mode is in use, *normal* or *group delay,* and on whether or not *null* or *normalise* is selected (from the SCALING menu). See Table 5.3.

Table 5.3 Size of History File

Null/Normalize	Storage Space Available	
	Normal	Group Delay
Null off; normalize off	405 results	331 results
Null on; normalize off	280 results	243 results
Null off; normalize on	243 results	192 results

Axion Exhibit 1024
Axion v. Agilent

5.11 VERNIER

Use VERNIER to adjust the generator output, whether measurements are being made or not.

VERNIER can also be used to adjust the size of the plotting field, whilst watching the pen movement.

5.11.1 ADJUSTING GENERATOR PARAMETERS: FREQ, AMPL, OR BIAS

The generator parameter on which the vernier is to act is selected from the first menu page.

The selected parameter is displayed on entry, together with the vernier soft key functions. The format of the display depends on whether or not measurements are being made:

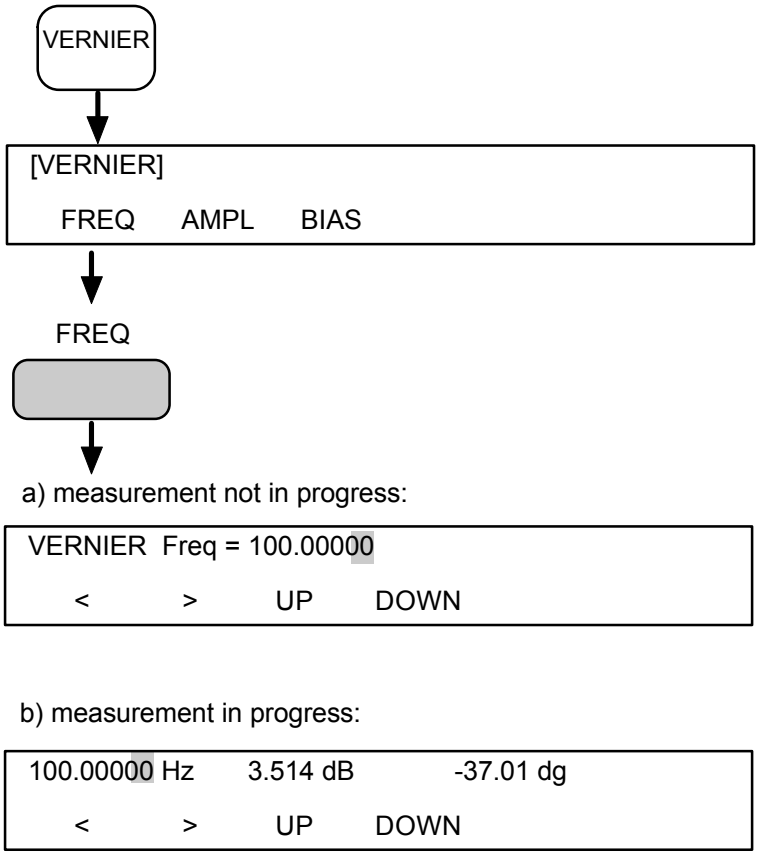

In case b) the generator parameter selected from the [VERNIER] menu is automatically selected as the displayed *variable.* In both cases, the selected parameter is adjusted as described in Sections 11.3 and 11.4.

Axion Exhibit 1024
Axion v. Agilent

5.11.2 ADJUSTING PLOTTER SCALING

Plotter scaling can be adjusted with the second [VERNIER] menu, which is selected with the NEXT key. (For this facility to work, [plotter] must be selected for the data output to the GPIB; see Section 8.1, in the present chapter.)

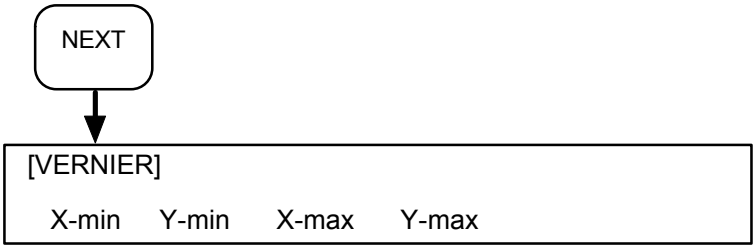

Pressing a soft key, for X-min, Y-min, X-max, or Y-max, displays the previously entered value. This value can be adjusted with the arrow keys and up/down keys, whilst watching the pen movement. See Sections 11.3 and 11.4 below.

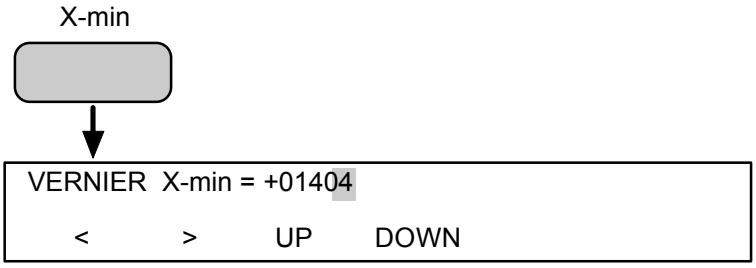

5.11.3 VERNIER DECADE

The decade on which VERNIER is to act is indicated by a flashing cursor. Set the cursor position with the arrow keys:

< Moves cursor one place to the left.

> Moves cursor one place to the right.

5.11.4 VERNIER ADJUSTMENT

Adjust the selected parameter with the UP and DOWN keys:

UP Increments the parameter value by one digit.

DOWN Decrements the parameter value by one digit.

Sustained pressure on either key gives continuous parameter adjustment.

Axion Exhibit 1024
Axion v. Agilent

5.11.5 REMOTE CONTROL OF THE VERNIER

Vernier control of the generator parameters *frequency, amplitude* and *bias* is selected with the commands V0, V1 and V2. In reply to each of these commands the instrument outputs the present parameter value. The controller can then use the step vernier command SP*F* to increment or decrement the value accordingly.

Vernier control of the plotter scaling values X-MIN, Y-MIN, X-MAX and Y-MAX is selected with the commands V3, V4, V5 and V6. In reply to each of these commands the instrument outputs the present parameter value followed by three strings of instructions, coded in HPGL. The controller uses the HPGL instructions to relay the parameter value, modified as necessary, to the plotter.

Axion Exhibit 1024
Axion v. Agilent

5.12 STATUS

The STATUS pages display control information not accessible under other control keys. Two leader pages [STATUS 1] and [STATUS 2] display the information sources; each source has available several pages of information. Pages are selected with NEXT and PREV. To return from an information page to a leader page, press ENTER.

5.12.1 [STATUS 1]

The Status 1 information appears under five headings:

a) PROGRAM	Learnt program memory.
b) μP	Microprocessor mode.
c) INTFACE	GPIB and RS423 data ports.
d) STORE	Control set-up store.
e) FILE	History file.

5.12.1.1 PROGRAM

Learnt program status. (Three pages)

Page 1: Capacity and Availabilty of Program Memory

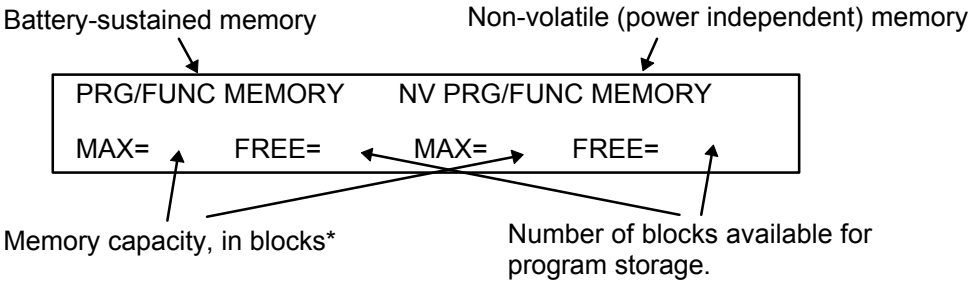

* Each block holds one instruction

Page 2: Program Slots In Use in Battery-Sustained Memory

Numbered program slots

PROGRAM	1	2	3	4	5	6	7	8	9
LEARNT	P	P	P						

P=program learnt.

Page 3: Program Slots In Use in Non-Volatile Program Memory

Numbered program slots

PROGRAM	10	11	12	13	14	15	16	17	18
LEARNT	P	P							

P=program learnt.

Axion Exhibit 1024
Axion v. Agilent

5.12.1.2 mP

Microprocessor status. (Two pages.)

Page 1: Microprocessor Operation

PROCESSOR	MODE	LAST ERROR
	NORMAL	00 00 00

Learn Program mode. Selected by the rear panel switch:

SUPERVISOR All learn program facilities can be used, with all programs.

NORMAL All learn program facilities can be used with programs 1 to 9. But facilities available with programs 10 and above are restricted to *copy from and execute program*.

OPERATOR (This position is reserved for future use.)

Code numbers of last three errors detected.

CALIBRATE is displayed when the calibrate mode is selected by an internal switch. Refer to the Maintenance Manual for details.

Page 2: Permitted range of last entered control parameter

The values displayed are the upper and lower limits of the range. For example, after the entry of a frequency value this page would show:

LAST	UPPER	LOWER
LIMIT	32E+6	10E-5

Upper limit (32MHz)

Lower limit (10μHz)

5.12.1.3 INT.FACE

GPIB and RS 423 status. (Three pages.)

Page 1: GPIB Status

Talker/listener mode, operating state, and device address:

GPIB	MODE	STATE	ADDRESS
	normal	idle	00/01

GPIB mode, as set by rear panel TALK ONLY switch:

NORMAL operation (TALK ONLY set to '0'). The interface acts as a Talker or a listener, in accordance with the device address sent to it by the system controller.

TALK ONLY operation (TALK ONLY set to '1'). The interface acts as a Talker only. Used to drive a plotter or printer on the GPIB, without the aid of a controller.

Operational state of GPIB interface:

IDLE	Interface idle.
maj LACS	Listener active, major address.
maj TACS	Talker active, major address
min LACS	Listener active, minor address
min TACS	Talker active, minor address

GPIB interface address, as set on the rear panel switches.

Axion Exhibit 1024
Axion v. Agilent

Page 2: GPIB status
Serial poll byte, parallel poll identity and sense, and control state:

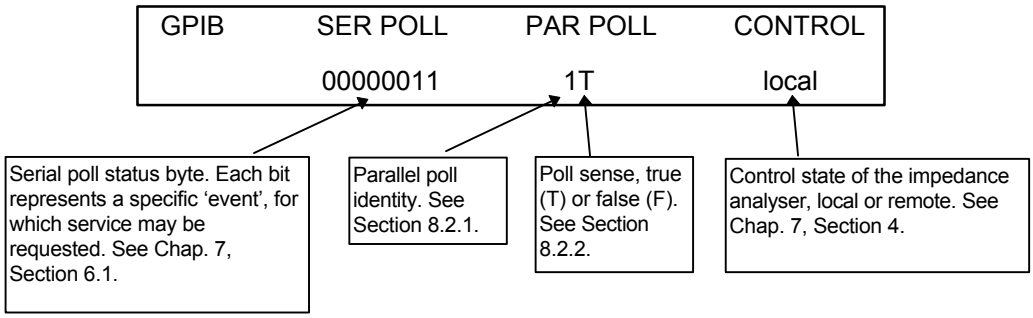

Page 3: RS423 Status
Baud rate:

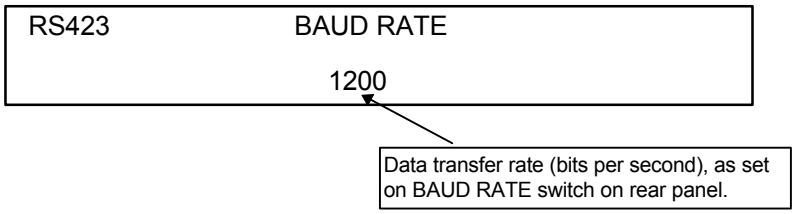

5.12.1.4 STORE

Set-up stores in use. (Two pages.)

Page 1: Control set-ups Stored in Battery-Sustained Memory

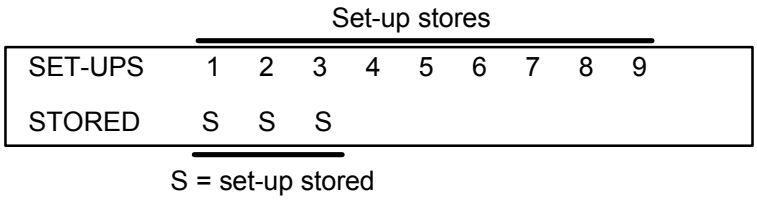

Page 2: Control set-ups Stored in Non-Volatile Memory

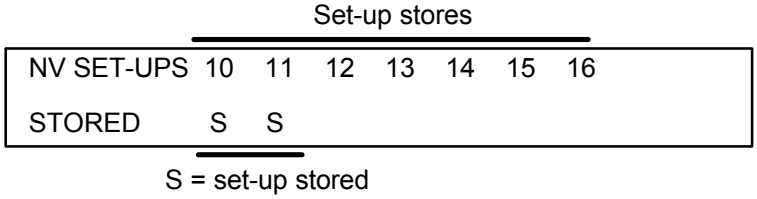

Axion Exhibit 1024
Axion v. Agilent

5.12.1.5 FILE

History file status. (Two pages)

Page 1: File Summary
Number of measurements made, accepted (passed limits test) and filed:

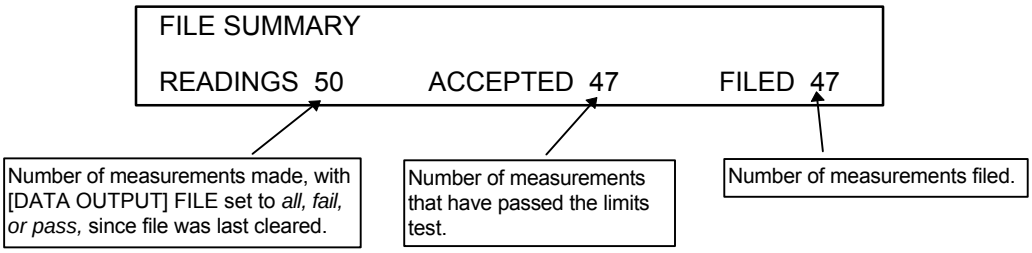

Page 2: File Memory
Capacity and availability of history file:

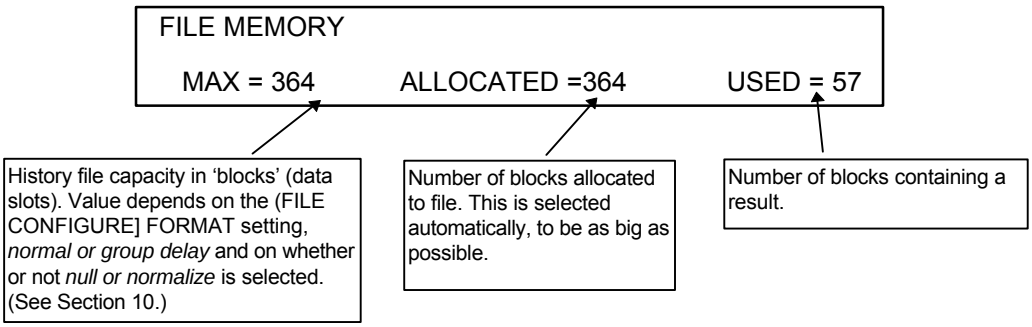

5.12.2 [STATUS 2]

The Status 2 information appears under four headings:

a) FUNCTION	Scaling functions.
b) CONST	Scaling constants.
c) RESULTS	Stored results.
d) STATS	Statistics.

5.12.2.1 FUNCTION

Scaling function slots in use, and functions stored. (Twenty pages)

Page 1: Function Slots In Use in Battery-Sustained Memory

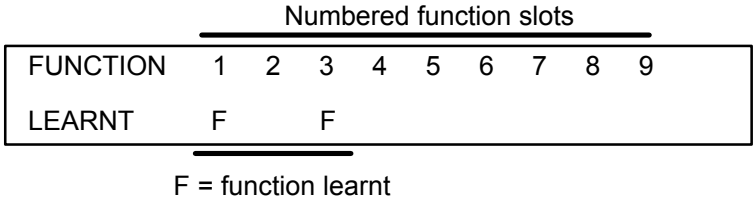

Axion Exhibit 1024
Axion v. Agilent

Page 2: Function Slots In Use in Non-Volatile Program Memory

Numbered function slots

NV FUNCTION	10	11	12	13	14	15	16	17	18
LEARNT			F		F				

F = function learnt

Page 3 to 20: Function stored

FUNCTION 1
V!^2

5.12.2.2 CONST

Scaling constant stores in use, and constants stored. (Ten pages.)

Numbered constant slots

CONSTANT	1	2	3	4	5	6	7	8	9
ENTERED	C		C						

C = constant entered.

Pages 2 to 10: Constants Stored in Battery-Sustained Memory

CONSTANT 1	a	b
	+1.35	-0.275

Constant stored

5.12.2.3 RESULTS

Results stores in use, and results stored. (Ten pages.)

Page 1: Results Stored in Battery-Sustained Memory

Result stores

RESULT	1	2	3	4	5	6	7	8	9
STORED	R		R						

R = result stored

Axion Exhibit 1024
Axion v. Agilent

Page 2: Stored Results

RESULT STORE 1	g. delay = 5.3479ns
a = 13.567	b = 1.259

5.12.2.4 STATS

Statistics of measurements stored in history file. (Two pages)

MEAN	MINIMUM	MAXIMUM

COUNT	STANDARD DEV	VARIANCE

The results from which the statistics are to be derived are selected as *Par 1* or *Par 2, from STATS in the FILE CONFIGURE menu. Par 1 and Par 2 are the displayed parameters, which, in turn, are selected from the DISPLAY menu.*

The statistics computed are the minimum and maximum values, the result count, i.e. the sample size *n,* and

$$MEAN = \sum_{i=1}^{i=n} \frac{x^i}{n} = x_{mean}$$

$$VARIANCE = \sum_{i=1}^{i=n} \frac{(x_i - x_{mean})^2}{n}$$

$$STANDARD\ DEV = \sqrt{\left(\sum_{i=1}^{i=n} \frac{(x_i - x_{mean})^2}{n} \right)}$$

To ensure that the statistics are meaningful and accurate:

1. CLEAR the history file, from the VIEW FILE menu.
2. Make a series of measurements, ensuring they are stored in the history file.
3. Select the parameter from which the statistics are to be derived, from the DISPLAY and FILE CONFIGURE menus.
4. LIST the filed results, from the VIEW FILE menu.
5. Read the statistics from the STATS pages shown above.

To derive the statistics of other parameters from the same measurements, repeat steps 3 through 5.

Axion Exhibit 1024
Axion v. Agilent

5.13 STORE/RECALL

Control set-ups, and measurement results, can be stored in memory for later use.

5.13.1 [SET UP]

Sixteen locations are available for control set-ups.

Control set-up action:

STORE Stores the present settings of all control parameters, in any free location from 1 through 16. (Stores 10 and 16 are in non-volatile (NV) memory.)

RECALL Sets the control parameters in accordance with the contents of the specified store.

CLEAR Clears the specifed store.

5.13.2 [RESULT]

Nine locations are available for measurement results.

Result storage is all that needs to be commanded. The stored values are used by FUNCTION in the [SCALE/LIMITS] menu (see Chapter 10) and are recalled automatically when scaling by a stored value is specified.

STORE Stores the displayed result (derived from the last measurement or from filed data) in any free location from 1 to 9.

5.13.3 PROGRAM KEYSWITCH

The setting of the PROGRAM keyswitch on the rear panel determines the use of non-volatile memory for control set-ups and measurement results. Two switch positions are used:

a) SUPERVISOR Control settings may be stored in, or recalled from, any location, from 1 through 16. All locations may be cleared.

b) NORMAL Control settings may be recalled from any location, but may be stored only in locations 1 through 9. Only locations 1 through 9 may be cleared.

c) OPERATOR Reserved for future use.

To set the instrument into the supervisor or normal mode, turn the key to the appropriate position and command “BREAK”.

To protect the contents of the non-volatile memory, operate the instrument in the normal mode whenever possible.

Axion Exhibit 1024
Axion v. Agilent

5.14 LEARN PROGRAM

LEARN PROGRAM allows the instrument to be programmed with a series of commands. A maximum of eighteen separate programs can be stored, and each is started from EXECUTE PROGRAM. See program STATUS (Section 12.1) for memory availability.

5.14.1 LEARN

Sets the instrument to memorize the commands. First enter a program number. Then, each command entered is stored as a program instruction.

NV programs can not be learnt directly. Learn a program in the range 1 to 9 and then copy it to an NV program 10 to 18.

QUIT When program entry is complete press QUIT.

5.14.2 EDIT

Allows a learnt program to be modified. First enter the program number. The first program instruction is then displayed and the following functions become available:

INSERT Allows one or more instructions to be inserted between the displayed instruction and the instruction before it. Select the instruction you want displayed, with PREV or NEXT. To return to the edit level (as selected by the EDIT hard key) press the EDIT soft key.

DELETE Deletes the displayed instruction. Select displayed instruction with PREV or NEXT.

NEXT Selects and displays the next instruction.

PREV Selects and displays the previous instruction.

QUIT When editing is complete press QUIT.

To edit an NV program, copy it to program 1 to 9, edit it, clear the original NV program, and then copy the edited program back again.

5.14.3 CLEAR

Deletes the instructions stored under a selected program number. The number is then available for a new program.

5.14.4 COPY

Provides a complete copy of a selected program under another program number. Used with EDIT, this facility allows one program to be derived from another.

Axion Exhibit 1024
Axion v. Agilent

5.14.5 PROGRAM KEYSWITCH

The setting of the PROGRAM keyswitch on the rear panel determines the use of the non-volatile memory for learn programs. Two switch positions are used:

a) SUPERVISOR — Learn programs may be stored in, or recalled from, any location, from 1 through 18. All locations may be cleared.

b) NORMAL — Learn programs may be recalled from any location, but may be stored only in locations 1 through 9. Only locations 1 through 9 may be cleared.

c) OPERATOR — Reserved for future use.

To set the instrument into the supervisor or normal mode, turn the key to the appropriate position and command “BREAK”.

To protect the contents of the non-volatile memory, operate the instrument in the normal mode whenever possible. In particular, do not switch the instrument on or off when the keyswitch is in ‘Supervisor’ mode

Axion Exhibit 1024
Axion v. Agilent

5.15 SELF TEST

Under SELF TEST, four functions are available:

5.15.1 TEST

Checks the operation of the measurement hardware, the microprocessor, the keyboard, and the display.

On entry, the microprocessor is tested first. Then a test is made on the display.

The first stage of the display test starts immediately, but user action is required to progress through the remaining stages. The test sequence is:

1. Press TEST. All display elements light, and horizontal lines scroll down the display.
2. Press ENTER. Vertical lines run through each character in turn. The display elements light in sequence.
3. Press ENTER. The character set is displayed.
4. Press ENTER. The keyboard test is offered. Press any control key to display the command code associated with it. The number of keys tested in this way is recorded and displayed.
5. Press ENTER. Test complete. A successful test displays a ‘PASS’ message and the software issue.

If the test was unsuccessful, a test failure message will be displayed. Some errors may be corrected from the front panel, as described below:

PROG. MEMORY FAIL (?TS1 =1) : Try initialising memory.

NV PROG. MEMORY FAIL (?TS1 = 2) : Problem may be caused by turning power off with unit in “Supervisor” mode. Fault can be cleared by pressing “Initialise” with the unit in “Supervisor” mode.

SET-UP FAIL (?TS1 =1) : Try initialising memory.

NVSETUP FAIL (?TS1 = 2) : Problem may be caused by turning power off with unit in “Supervisor” mode. Fault can be cleared by pressing “Initialise” with the unit in “Supervisor” mode.

Once the remedial action has been taken, re-test the instrument using SELF-TEST-Test. If the fault persists, contact your Solartron Service Centre.

Axion Exhibit 1024
Axion v. Agilent

5.15.2 INIT

Sets the control parameters to the default state, clears the history file, the result/control stores and learn program memory, and displays ‘INITIALIZED’.

CAUTION: The content of the non-volatile stores and program memory is cleared if the PROGRAM keyswitch is set to SUPERVISOR when INIT(ialize) is commanded. In this case initialise takes several seconds.

5.15.3 RESET

Sets the control parameters to the default state and displays ‘RESET’. The data in user-accessible memory are left intact.

5.15.4 TIME

The internal clock stops whenever power is switched off and restarts from zero when power is restored, on *reset,* or *initialize.* Use TIME to set the clock. Enter HOURS first, then MINUTES.

5.15.5 ERROR-

Beep tone that draws attention to a displayed ‘error’ message.

[on] Beep tone sounds briefly when message is -displayed.
[off] Beep tone off.

Axion Exhibit 1024
Axion v. Agilent

6
Measurement Connections

Section		*Page*
6.1	**Introduction**	**6.3**
6.2	**Analyzer Input Configurations**	**6.3**
6.2.1	Single-ended Inputs	6.3
6.2.2	Differential Inputs	6.4
6.3	**High Frequency Measurements**	**6.5**
6.4	**Equivalent Circuits**	**6.6**
6.5	**Basic Connections for In-circuit Impedance Measurements**	**6.7**
6.5.1	Cable Lengths	6.7
6.6	**The Test Modules**	**6.8**
6.6.1	12601A Component Test Module	6.8
6.6.1.1	Component Clamps	6.8
6.6.1.2	Fitting and Removing the Test Module	6.9
6.6.1.3	Test Module Connections	6.9
6.6.2	12603A In-Circuit Test Module	6.10

Axion Exhibit 1024
Axion v. Agilent

Axion Exhibit 1024
Axion v. Agilent

6.1 INTRODUCTION

Connections to the item under test are made from BNC sockets on the instrument front panel. The GENERATOR output is connected to the input of the item under test, and three input channels, VOLTAGE 1, VOLTAGE 2, and CURRENT, are available for measuring the test response.

Connections can be made directly to the front panel connectors, using suitably terminated screened leads. Or, for impedance measurements, connections can be made via a test module which fits over the connectors.

6.2 ANALYZER VOLTAGE INPUT CONFIGURATIONS

A menu of input configurations, available under the ANALYZER hard key, allows the analyzer inputs to be configured independently for single-ended or differential measurements, with the outer (screen) of the input leads grounded or floating. The connections and input configurations for typical applications are shown in Sections 2.1 and 2.2.

6.2.1 SINGLE-ENDED VOLTAGE INPUTS

Single-ended inputs may be used where the signals to be measured are referred to a general ground, such as the main chassis of the item under test. A typical application is shown in Fig. 6.1. The connections shown will allow the combined performance of amplifiers A1 and A2 to be measured. Alternatively, INPUT V1 Hi could be connected to test point TP2 to measure amplifier A2 only, or INPUT V2 Hi could be connected to TP2 to measure amplifier A1 only.

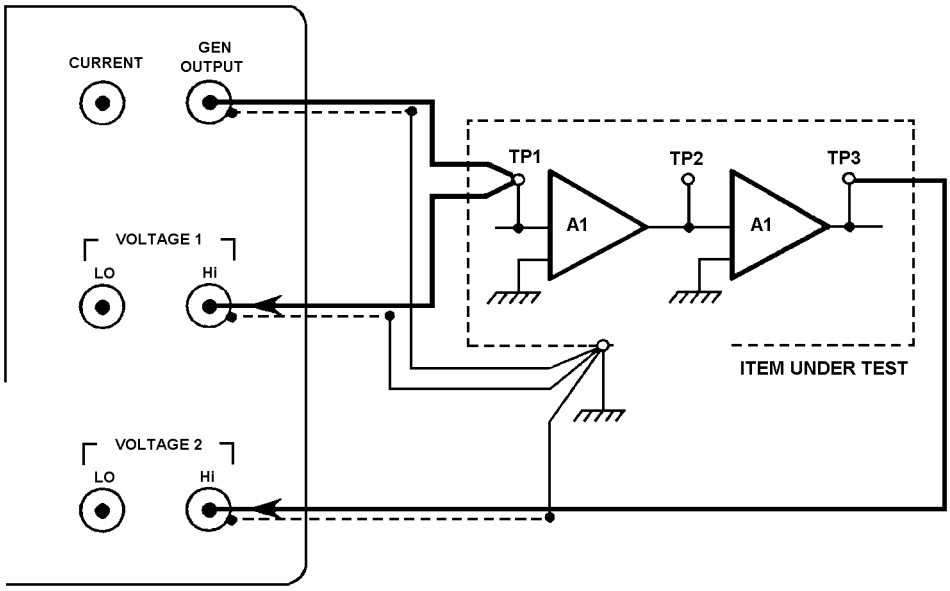

Figure 6.1 - Typical use of single-ended voltage inputs

The connections made at the analyzer input for single-ended inputs, floating or grounded screen, are shown in Figure 6.2. These connections are made within the instrument and are selected from the INPUT V1 and INPUT V2 menu pages.

Axion Exhibit 1024
Axion v. Agilent

A floating screen can accomodate a limited common mode signal from the item under test.

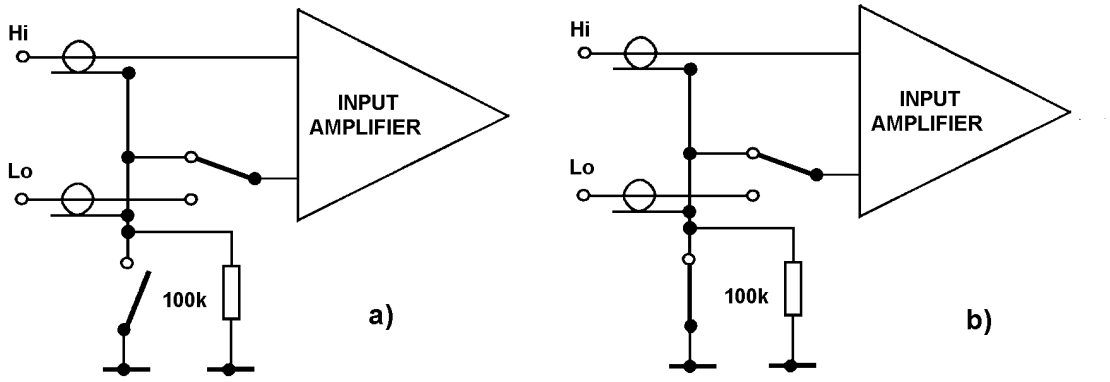

Figure 6.2 - Single-ended input configuration, with a) floating screen and b) grounded screen

6.2.2 DIFFERENTIAL VOLTAGE INPUTS

Differential inputs may be used where the signal to be measured has a reference point separate from the general ground. Such signals could appear:

a) across an individual component or

b) between a test point and signal ground, as in the example shown in Figure 6.3.

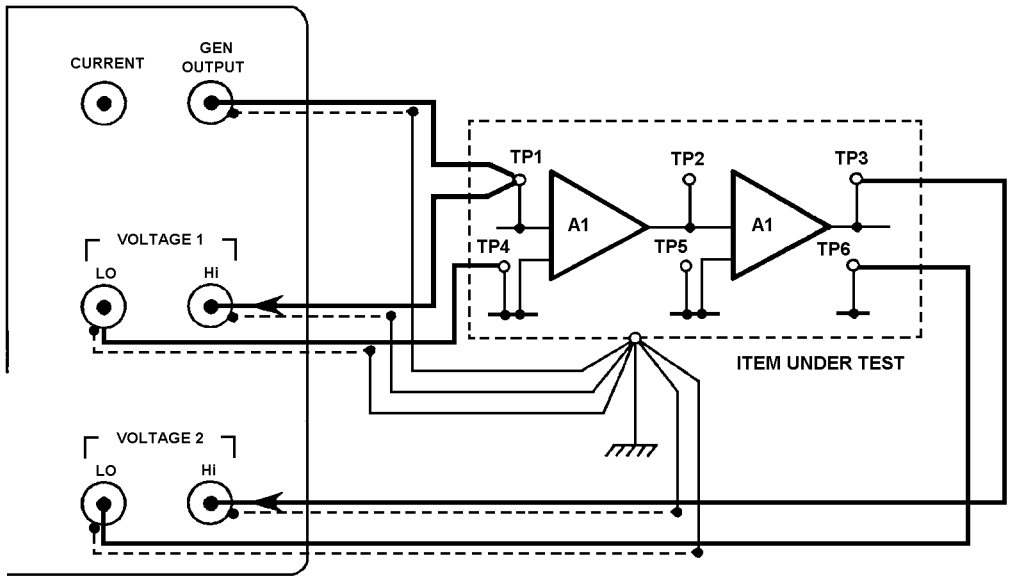

Figure 6.3 - Typical use of differential voltage inputs

The analyzer inputs will tolerate a common mode signal of up to 5V. In the above example this would appear between test points TP4, 5, and 6, and the general ground.

The generator output has a “floating” Lo (screen) which will tolerate 0.4V of ripple or dc potential from the general ground.

Axion Exhibit 1024
Axion v. Agilent

The connections made for differential inputs, floating or grounded screen, are shown in Figure 6.4.

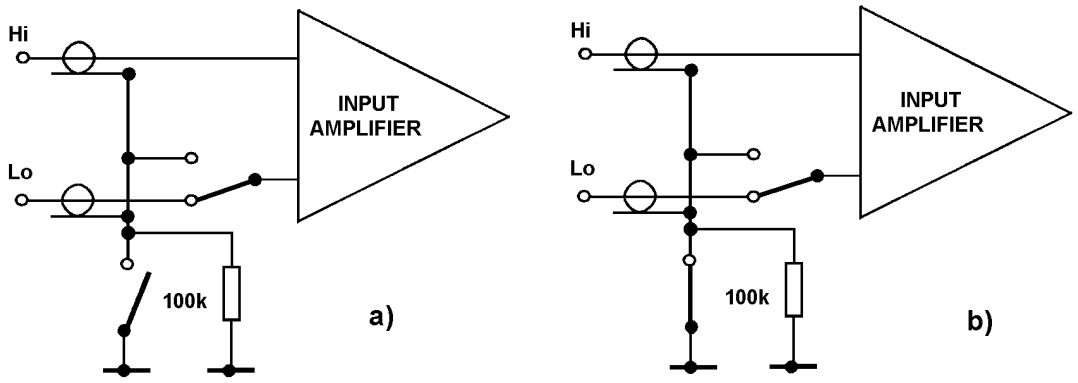

Figure 6.4 - Differential input configuration, with a) floating screen and b) grounded screen

6.3 HIGH FREQUENCY MEASUREMENTS

For drive frequencies in the region of 1MHz and above, care must be taken to match the input and output impedances of the instrument and item under test with the impedance of the connecting cables (50Ω). This is to avoid standing wave problems, which occur when the length of the connecting cables is about a quarter-wavelength of the drive signal frequency.

Inputs are matched to the cable with 50Ω *feedthrough terminators*. The generator output, when driving a pair of inputs, is connected through a 50 power splitter. A typical application of these devices is shown in Figure 6.5.

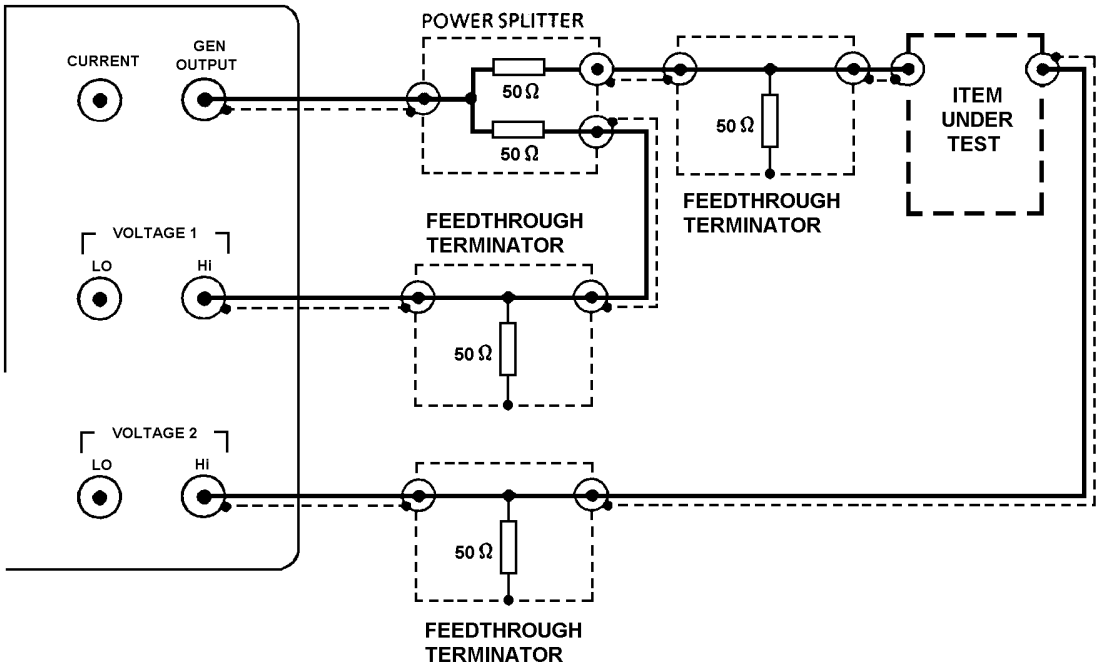

Figure 6.5 - Typical connections for high frequency voltage measurements

Axion Exhibit 1024
Axion v. Agilent

6.4 EQUIVALENT CIRCUITS

The equivalent circuits of the generator output and the analyzer inputs are given in Figures 6.6 and 6.7. These may be used when estimating loading effects on a) the item under test and b) the generator output.

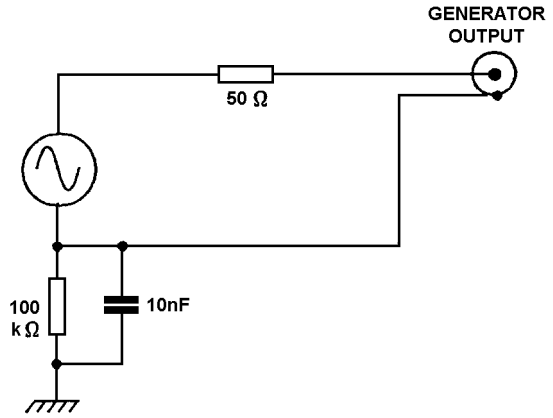

Figure 6.6 - Equivalent circuit of generator output

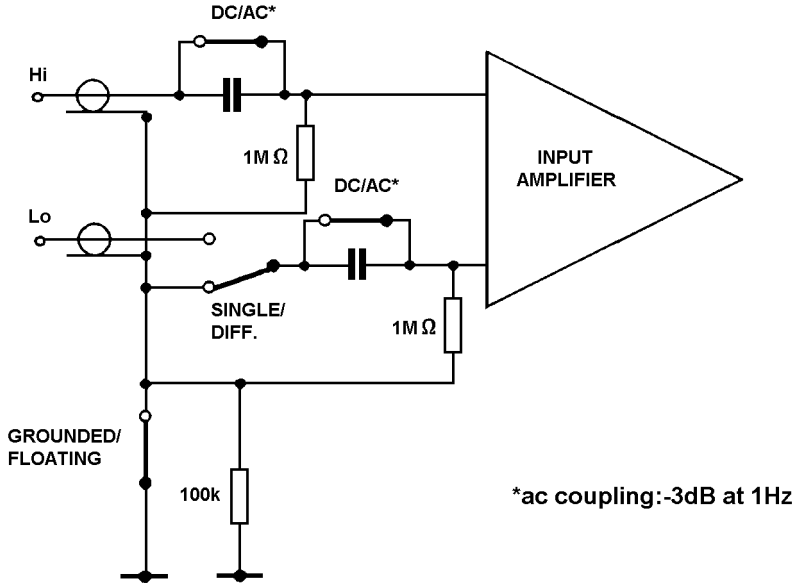

Figure 6.7 - Equivalent circuit of analyzer input

Axion Exhibit 1024
Axion v. Agilent

6.5 BASIC CONNECTIONS FOR IN-CIRCUIT IMPEDANCE MEASUREMENTS

The basic connections for in-circuit impedance measurements are shown in figure 6.8. This is intended as a guide when connections are made other than through a test module, e.g. in automatic test systems.

All circuit paths in parallel with the item under test, **which have an external node**, may be excluded from the measurement by virtual earth guarding. Simply connect each node to ground through the screens, as shown in figure 6.8.

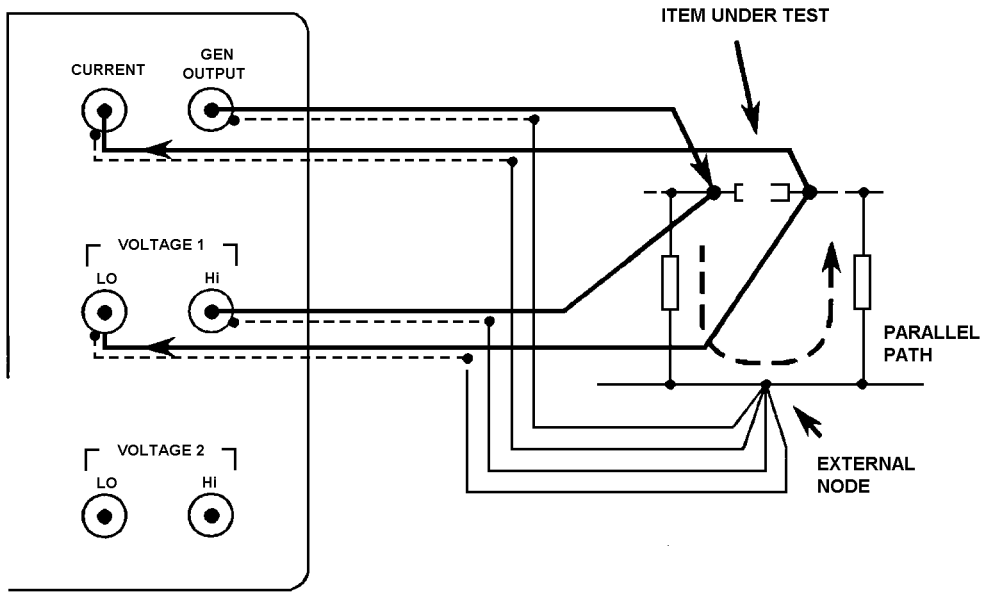

Figure 6.8 - Connections to be made for in-circuit impedance measurements when not using the in-circuit test module

For convenience two modules are available for impedance measurement. The 12603A is for in-circuit measurement, as shown in figure 6.8, while the 12601A is optimised for h.f. measurements on components. See section 6 for details.

6.5.1 CABLE LENGTHS

Accuracy may be degraded by long cable lengths. In particular, capacitance in the CURRENT and VOLTAGE 1 LO inputs will affect current measurement accuracy at h.f. so these cables should be kept as short as possible. Use the high current ranges (6mA or 60mA) above 1MHz as these are less affected.

Best h.f. impedance measurements are obtained using the 12601A Test Module which minimises connection strays.

Axion Exhibit 1024
Axion v. Agilent

6.6 THE TEST MODULES

Two types of impedance test module are available: the 12601A module, for testing loose components, and the 12603A module, for measuring components in-circuit. Both types are available as options.

6.6.1 12601A COMPONENT TEST MODULE

The 12601A component test module makes it easy to connect loose components to the instrument front panel terminals.

6.6.1.1 COMPONENT CLAMPS

Two types of component clamps are supplied with the module

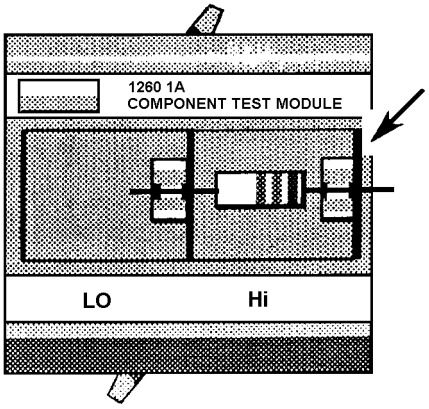

One type of clamp is suitable for components with axial leads. To insert the component under test, simply grasp the leads firmly at either end and push them into the clamps.

Note that the component clamps are labelled HI and LO. These labels refer to the Hi and Lo connectors of the Voltage 1 analyzer input. As shown in Section 6.1.3, the generator output is applied to the HI side of the item under test. When testing polarized components, make sure that you insert them the right way round. (Remember, the bias can be set either positive or negative.)

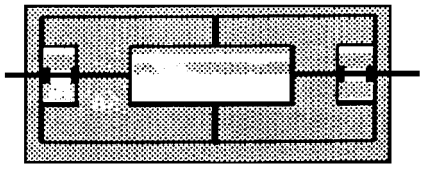

Axial lead component clamps can be inserted into the test module either way round. This allows connections to be made near to the lead entry points on both large and small components and minimizes errors due to lead impedance.

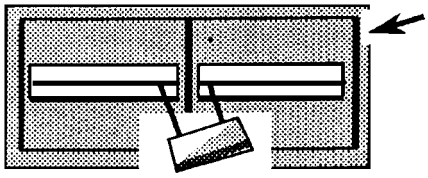

The other type of clamp may be fitted for components with radial leads.

Axion Exhibit 1024
Axion v. Agilent

6.6.1.2 FITTING AND REMOVING THE TEST MODULE

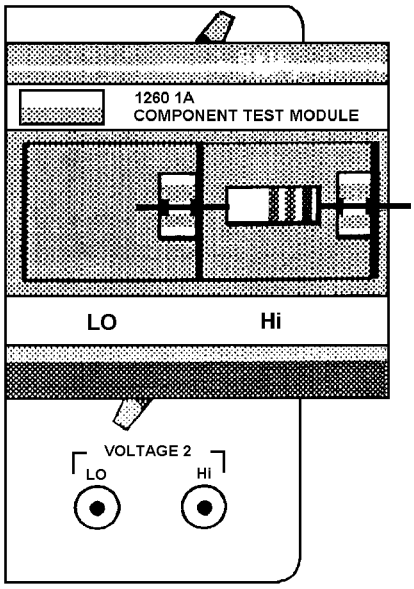

The test module fits onto the four upper BNC terminals on the instrument front panel and is locked onto these by a pair of lever-operated connectors.

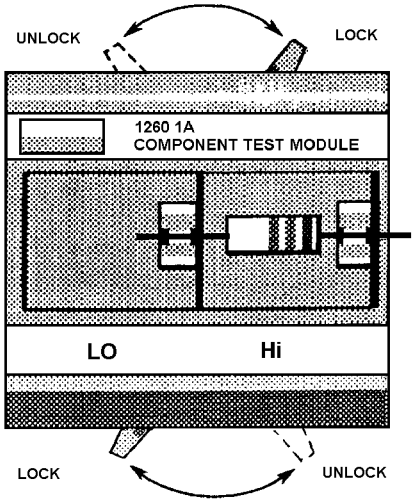

To fit the module, set the levers to UNLOCK, push the module firmly onto the four upper connectors until resistance is met, and set the levers to LOCK.

To remove the module, set the two levers to the UNLOCK position and pull the module carefully away from the front panel connectors.

6.6.2.1 TEST MODULE CONNECTIONS

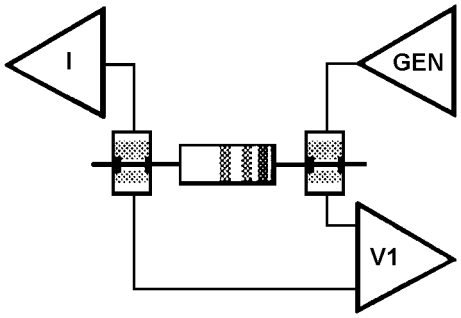

The GEN OUTPUT drives a current through the component under test, into the CURRENT input. A voltage is thus developed across the component and is applied across the Hi and Lo terminals of the VOLTAGE 1 input. Ratios of the current and voltage values measured yield the impedance values.

Axion Exhibit 1024
Axion v. Agilent

6.6.3 12603A IN CIRCUIT TEST MODULE

The 12603A test module allows components to be measured in-circuit. The effect of parallel component networks may be eliminated by using *virtual earth* guarding. The 12603A is not recommended for use above 1MHz.

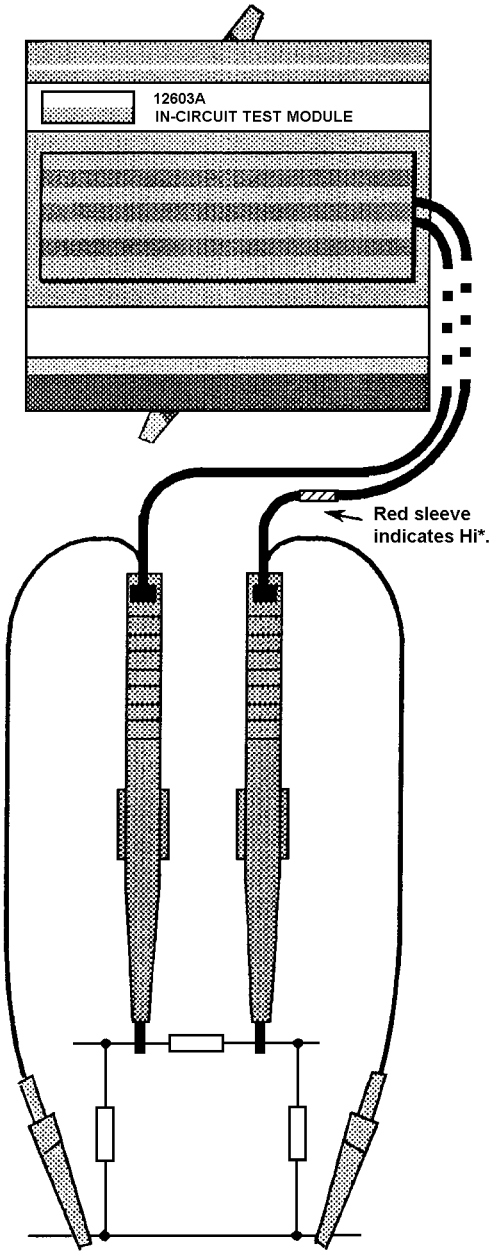

A pair of component clamps on flying leads are fitted on either side of the component to be measured.

Both guard clips are connected to the 'nodes' surrounding the points of measurement. This largely eliminates the effect of parallel networks from the measurement result.

The effect of guarding is, however, frequency dependent. Errors can occur towards the high end of the frequency range, particularly with capacitive parallel networks. The remedy is to reduce the measurement frequency until consistent results are obtained.

Stray impedances that appear across the component to be measured may be nulled. See Chapter 5, Section 5.9.1.2.

*See Section 2.1.1, regarding the testing of polarized components.

*See section 5.2.1.1, regarding the testing of polarized components.

Axion Exhibit 1024
Axion v. Agilent

7
Remote Control: GPIB & RS423

Section		*Page*
7.1	**Introduction**	**7.3**
7.2	**GPIB Interface**	**7.3**
7.2.1	GPIB Capability Code	7.3
7.2.2	GPIB Connector	7.3
7.2.3	GPIB Switches	7.4
7.2.3.1	Device Address	7.4
7.2.3.2	Input Command Terminator	7.4
7.2.3.3	Talk Only	7.5
7.2.3.4	Example of GPIB Switch Settings	7.5
7.2.4	Output to the GPIB	7.5
7.2.4.1	ASCII Output to a Talk Only Device	7.6
7.2.4.2	Normal ASCII Output (for Talker-listener Devices)	7.6
7.2.4.3	GPIB Dump Output	7.6
7.2.5	Serial Poll	7.7
7.2.5.1	The Status Byte	7.7
7.2.5.2	Service Request Enable	7.8
7.2.5.3	Assigning Error Events	7.9
7.2.6	Parallel Poll	7.10
7.2.7	Summary of Commands for IEEE 488 Protocol	7.10
7.3	**Serial Interface**	**7.11**
7.3.1	Data Handshake	7.11
7.3.2	Echo	7.11
7.3.3	Input Command Terminator and Character Frame	7.11
7.3.4	Serial Interface Connector	7.11
7.3.5	Baud Rate Switches	7.11
7.3.6	Output to Serial Interface	7.12
7.3.6.1	ASCII Output to a Printer	7 12
7.3.6.2	ASCII Output to a Controller	7.13
7.3.6.3	Dump Output	7.13
7.4	**Dump Output Format, for RS423 and GPIB**	7.14
7.4.1	“Dump” Output	7.14
7.4.2	“Dump All” Output	7.14
7.4.3	Floating Point Format (“Dump” and “Dump All” Data)	7.15
7.5	**Remote/Local Control**	**7.16**
7.5.1	Local Lock-out	7.17
7.5.2	Combined Use of RS423 and GPIB Devices	7.18
7.6	**Control Program Examples**	**7.19**
7.6.1	Language Used in Program Examples	7.19
7.6.2	Example: Outputting Readings to the GPIB	7.19
7.6.3	Example: Plotting Results from the History File, Using a Controller	7.20
7.6.4	Example: Outputting the History File to the GPIB	7.20

Axion Exhibit 1024
Axion v. Agilent

Axion Exhibit 1024
Axion v. Agilent

7.1 INTRODUCTION

The instrument is fitted, as standard, with a GPIB interface and an RS423 interface, for communication with remote devices.

Full control and data input/output is possible through the GPIB.

RS423 is intended mainly for data output to a printer, VDU, etc, but, if the user is fully conversant with RS423 protocol, limited control of the instrument may, in some cases, be possible.

7.2 GPIB INTERFACE

The GPIB Interface conforms to the IEEE 488,1978 standard. The complete standard is published by the IEEE under the title: “IEEE Standard Digital Interface for Programmable Instrumentation”. A useful introduction to the theory of the GPIB is given in the Solartron monograph: “Plus Bus - the Solartron GP-IB”.

7.2.1 GPIB CAPABILITY CODE

The GPIB Interface in the instrument conforms to the following sub-functions within the standard, as listed on the rear panel:

SH1	Source handshake.
AH1	Acceptor handshake.
T5	Basic talker,. serial poll, talk only selectable, unaddressed if MLA (‘My Listener Address).
TE0	No extended talker capabilitv
L4	Basic listener, no listen only mode, unaddressed if MTA (My Talker Address).
LE0	No extended listener capability.
SR1	Complete service request capability.
RL1	Complete remote/local capability, with local lock-out.
PP2	Parallel poll with local configuration.
DC1	Complete device clear capability, including selective device clear.
C0	No controller capability.
DT0	No device trigger capability.
E1	Open collector drivers:

7.2.2 GPIB CONNECTOR

Connection to the GPIB is made via the 24-way connector on the IEEE 488/GPIB interface. See Fig. 7.1. The pin connections conform to the IEEE 488, 1978 standard.

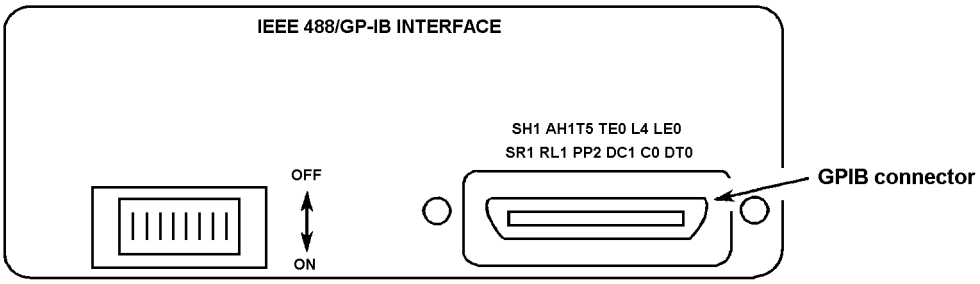

Figure 7.1 - GPIB interface

Axion Exhibit 1024
Axion v. Agilent

7.2.3 GPIB SWITCHES

Some interface functions are set by miniature toggle switches on the rear panel of the instrument. These functions are described below. (The remaining interface functions are set from the [GPIB CONFIGURE] menu.)

The GPIB switches are shown in Fig 7.2. These switches must be set before the instrument can be used in a GPIB system.

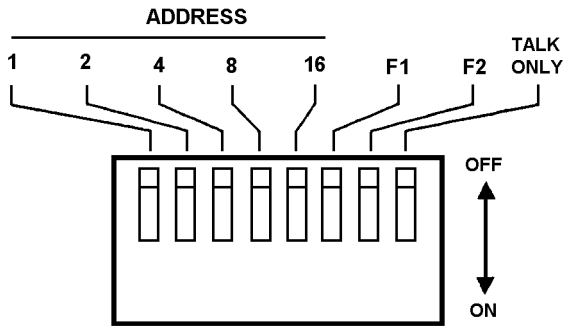

Figure 7.2 - GPIB switches. (All switches shown in off position.)

Once the switches have been set the instrument must read them, so that their settings can be implemented. The switches are read automatically at power-on, or on INITIALIZE, RESET, or BREAK. Power-on and BREAK leave other control settings unchanged, whilst INITIALIZE and RESET return them to the default state.

The GPIB switch functions are described in Sections 7.2.3.1 to 7.2.3.4 below.

7.2.3.1 Device Address

The ADDRESS switches select the GPIB address of the instrument. To avoid problems associated with mixing binary and ASCII information two GPIB ports are provided. One port is used for for ASCII commands and data and the other for high speed binary *dump* output. The two ports are serviced through the same GPIB connector, but each has its own software address.

The address of the ASCII input/output port is the *major* address. This address must always be an even number, so always set the left-hand ‘1’ switch to the *off* position. The odd-numbered address immediately following a major address is the *minor* address and is assigned automatically to the binary port.

7.2.3.2 Input Command Terminator

Use switches F1 and F2 to select the terminator that the instrument is to recognise for GPIB commands:

F1	F2	Terminator Selected
off	off	lf (line feed)
on	off	cr (carriage return)
off	on	; (semicolon)
on	on	EOI (End or Identify signal)

Axion Exhibit 1024
Axion v. Agilent

EOI is one of the five GPIB management lines. Some controllers automatically assert EOI accompanied by a command terminator. In this case, select “EOI” with switches F1 and F2. If the controller itself offers a choice of command terminator, choose *carriage return, line feed,* or *semicolon:* this prevents command data being lost or corrupted.

Any command terminator other than the one selected is ignored by the instrument.

The command terminator selected should agree with that used by the GPIB controller. Details of the command terminator should appear in the controller handbook

7.2.3.3 Talk Only

Choose between *talk only* and *talker/listener* operation with the TALK ONLY switch:

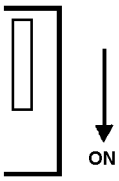

Talk only ON. The instrument can act as a *talker* only, to drive a *listen-only* device, such as a plotter, without the aid of a GPIB controller.

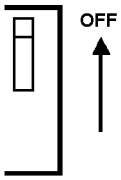

Talk only OFF. The instrument can act as either a *listener* or a *talker,* as commanded by the GPIB controller.

7.2.3.4 Example of GPIB Switch Settings

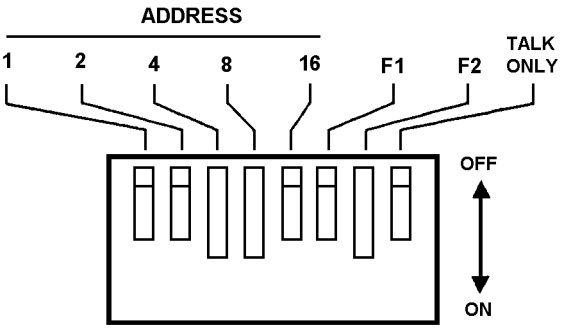

The *major* address is 12.
The *minor* address is therefore 13.
The command terminator is a semicolon.
The GPIB mode is talker/listener.

7.2.4 OUTPUT TO THE GPIB

The output of measurement results to the GPIB is controlled by the [DATA OUTPUT] GPIB setting (Chapter 5, Section 8.1). *All, fail,* and *pass* results are output in ASCII, and *dump* results in binary. The ASCII output can be selected for either a *talk only* device, such as a printer, or a *talker-listener* device, such as a GPIB controller. Binary data can be interpreted only by a controller, but can be stored, on disk for example, for subsequent controller processing.

Axion Exhibit 1024
Axion v. Agilent

7.2.4.1 ASCII Output to a Talk Only Device

When the instrument is set for talk only operation (TALK ONLY switch set to ON) the format of ASCII data output to the GPIB is the same as for data output to an RS423 printer. (See Section 7.3.6.1 below.) This format is suitable for GPIB *listen only* devices such as printers or VDUs.

Column headings are selected *on* or *off* from [FORMAT] HEADING, as for RS423 devices. The same setting applies to both RS423 and GPIB devices.

7.2.4.2 Normal ASCII Output (for Talker-Listener Devices)

When the instrument is set for talker-listener operation (TALK ONLY switch set to OFF) data are output to the GPIB in a compressed form, suitable for interpretation by a GPIB controller. Each parameter, *except frequency,* is represented by an eleven character field, containing a five-digit fixed point part and a two-digit exponent:

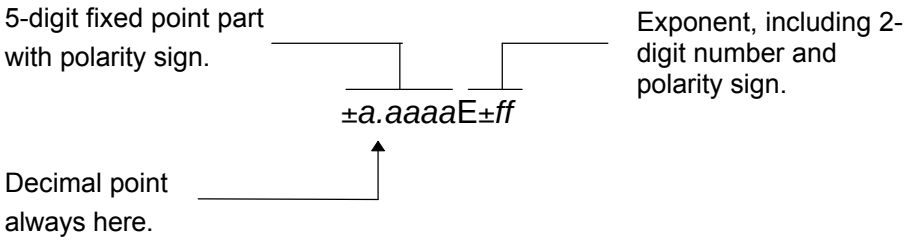

Frequency is represented by a fourteen character field, containing an eight digit fixed point part:

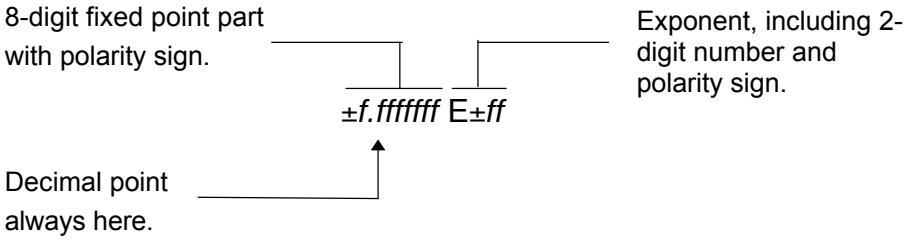

A complete reading takes the form:

Variable Parameter 1 Parameter 2 Error Code Limits Code cr

The error code is represented by a single digit; only the last digit of a Group 8 error code is reported. The output separator is shown as a comma, and the output terminator is carriage return. The limits code represents a limits check: 00 = pass; -1 = Lo; +1 = Hi.

The output separator and terminator are selected from the [GPIB CONFIGURE] menu.

No headings are available and the last result is not re-output after menu changes. Use the 'DO' remote command to read the last result again, e.g. after changing the DISPLAY SOURCE.

7.2.4.3 GPIB Dump Output

Dump output gives the fastest output data rate. Each parameter is represented by a 32-bit floating point number whose format conforms to the ANSI/IEEE Standard 754 (see Section 7.4.3).

Axion Exhibit 1024
Axion v. Agilent

The full precision of the frequency setting cannot be represented in the 4-byte version of the IEEE 754 format. So, if full precision is required, a separate FR? command should be sent. The frequency can then be read in ASCII format.

No separators or terminators are used, as they cannot be distinguished from binary data. However, if the output terminator selected from [GPIB CONFIGURE] is either *cr* + *EOI* or *cr, lf* + *EOI,* then the GPIB signal EOI *(End* or Identify) is asserted with the last byte.

The output rate is the same as that of the ASCII port, approximately 1 byte per millisecond, but the data is compressed. Also, the instrument's internal computation time is much less.

No headings are available and the last result is not re-output after menu changes. Use the 'DO' remote command to read the last result again, e.g. after changing the DISPLAY SOURCE.

7.2.5 SERIAL POLL

The instrument can be configured to request service from a GPIB controller when a particular event has occurred, e.g. on *end of sweep,* or *data ready.* The controller may then conduct a serial poll to find the source of the request. In a serial poll the controller examines the *status byte* of each device in turn.

7.2.5.1 The Status Byte

The status byte register (read only) holds the status of all events for which it is possible to request service.

The status byte can be read by a serial poll command (which clears the RQS bit) or by an *STB? command (which leaves the byte unchanged).

The status byte register is cleared by the commands *break* (BK), *clear status* (*CLS), *reset* (*RST) *initialize* (TT1) and *reset* (TT2), and on power-up.

128	64	32	16	8	4	2	1
END OF FILE	RQS	ESB	MAV	END OF PLOT	END OF SWEEP	END OF MEASURE	END OF PROGRAM

The significance of these bits is as follows:

Bit	Event	Comments
128	End of file	Set when the end of file is reached, either after a *list file* command or when filing data. Cleared by the list file command, the *clear file* command, or by adding more data to the file (except when file is full).
64	RQS	Request service. Set when there is a correspondence between one or more of the bits set in the status byte register and one or more of the bits set in the service request enable register. Cleared by a serial poll or an *SREn command.

(Continued overleaf)

Axion Exhibit 1024
Axion v. Agilent

Bit	Event	Comments
32	ESB	Event status byte. Set when there is a correspondence between one or more of the bits set in the event status register and one or more of the bits set in the event status enable register. Cleared by an *ESEn command.
16	MAV	Measurement (or message) available. Set when there are data available to be read. The data may be measurement results, parameter query replies or anything being output to the GPIB. Cleared when the data are read.
8	End of plot	Set at the end of a plot. Cleared when a new plot is started.
4	End of sweep	Set at the end of a sweep. Cleared when a new sweep is started.
2	End of measure	Set when a measurement is completed. Cleared when a new measurement is started.
1	End of program	Set when a learnt program is completed. Cleared when a new program is started.

7.2.5.2 Service Request Enable

The instrument can be enabled to request service (and set the RQS bit) for one or more specified events. (Alternatively, if several of the status bits must be monitored simultaneously, the controller can be programmed to poll the status byte continually.)

To enable a service request send the remote command *SRE*n*. This sets the number *n* (in the range 0 to 255) into the service request enable register. *"n"* represents an event, or combination of events, for which service is to be requested. For example, *n* = 8 (STB 00001000) results in a service request at the next *end of plot* (see Fig 7.3).

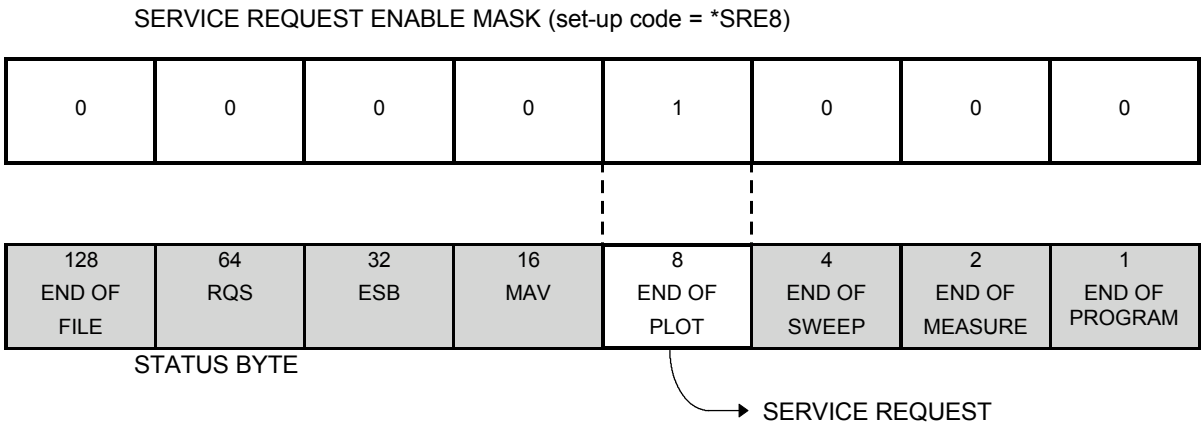

Figure 7.3 - Setting up a service request for "end of plot"

Axion Exhibit 1024
Axion v. Agilent

Once the instrument has requested service, the service request enable register must be set up again before another request can be made. The command *SRE*n* with which this is done also resets the RQS bit (bit 64) in the status register.

The service request enable register can be read with the command *SRE?

7.2.5.3 Assigning Error Events

The error bit in the status byte register may have assigned to it any combination of the events stored in the event status register (ESR). This register (read only) can be read with the command *ESR?

Error events are assigned by setting the appropriate bit(s) in the event status enable register (ESE) with the command *ESE*n*. See the example in Fig 7.4.

The event status register is cleared by the commands *break* (BK), *event status enable* (*ESE*n*), *event status query* (*ESR?), *clear status* (*CLS), *reset* (*RST), *initialize* (TTI) and *reset* (TT2), and on power-up. The command *ESE*n* also resets the ESB bit (bit 32) in the status byte register.

Remember that if an interrupt is required for the error event(s) then the error bit in the service request enable mask must be set to '1' (*SRE32).

EVENT STATUS ENABLE (set-up code = *ESE17)

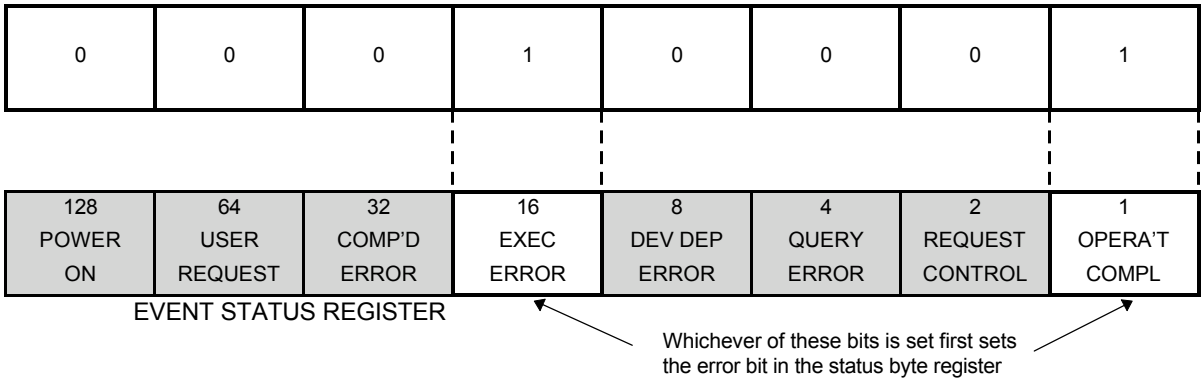

Figure 7.4 - Assigning "execution error" and "operation complete" to the status byte error bit

The significance of the event bits is as follows:

Bit		Event
128	Power On	Set when the power supply has been switched off and on.
64	User Request	Not used.
32	Command Error	Set by Error 01 and Error 02.
16	Execution Error	Set by Error 03 and Error 61.
8	Device Dependent Error	Set by any other errors or warnings.
4	Query Error	Set if an attempt is made to read non-existent data, or if a reading is aborted before all data is read.
2	Request Control	Not used.
1	Operation Complete	Set when the instrument has completed an operation. This bit must first be enabled by an operation complete (*OPC) command.

Axion Exhibit 1024
Axion v. Agilent

7.2.6 PARALLEL POLL

The instrument can be configured to give a parallel poll *true/false* response on a selected GPIB data line, to indicate whether or not the instrument is requesting service. However, the instrument must first be configured for serial poll (see Section 7.2.5.1 above).

To set up a parallel poll configuration send the remote command PP*n*, where *n* is an integer from 1 to 8 defining which GPIB data line is to carry the response.

Setting PARALLEL POLL to zero or sending PP0 unconfigures parallel poll.

To select the sense of the parallel poll line send the remote command PS*n*, where *n* = 1 signifies *true* and *n* = 0 signifies *false.*

The parallel poll response is also cleared by any change to the SERIAL POLL value, by any BREAK action-key selection, and by power-off.

Unlike serial poll, parallel poll need not be reconfigured after each service request. It is, however, cleared by the command *SRE*n*.

7.2.7 SUMMARY OF COMMANDS FOR IEEE 488 PROTOCOL

The following commands are supported by the instrument for IEEE 488 protocol:

Cmd	Action
*RST	Reset command, equivalent to the break command (BK).
*CLS	Clears the status byte register and the event status register. Any *OPC command is cancelled
*STB?	Queries the status byte register, leaving it unchanged.
*SRE*n*	Sets the service request enable register to the bit pattern corresponding to *n.*
*SRE?	Queries the service request enable register, leaving it unchanged.
*ESR?	Queries the event status register, clearing it in the process.
*ESE*n*	Sets the event status enable register to the bit pattern corresponding to *n.*
*ESE?	Queries the event status enable register, leaving it unchanged.
*OPC	Enables the instrument to set the *operation complete* bit in the event status register when the idle state is next entered.
*IDN?	Instrument outputs the identifier string " 1260 IMPEDANCE ANALYZER, SOLARTRON, 0, 0"
*TST?	Starts a self test, on completion of which the instrument outputs the result: "0" for *fail* or "1,' for *pass.* The front panel is left in self test mode, scrolling the rows. The next command clears this, or the operator can clear it by keying ENTER twice.
*RCL*n*	Recalls a stored setup. Equivalent action to the RS*I* command.
*SAV*n*	Stores the present setup. Equivalent action to the SS*I* command.

Axion Exhibit 1024
Axion v. Agilent

7.3 SERIAL INTERFACE

The serial interface is suitable for use with printers, display units and keyboards compatible with RS232 and RS423.

7.3.1 DATA HANDSHAKE

The instrument supports XON/XOFF data handshake. The.ASCII commands XON (transmit on) and XOFF (transmit off) are recognised when outputting data to an external device. These commands are equivalent to the ASCII device control characters DC1 and DC3.

The instrument also asserts XOFF when it is busy, and XON when it is free. Full information is given in the standards:

* American National Standard Code for Information Interchange (ASCII) X3.4 1977
* BS 4730; The United Kingdom 7-bit data code (ISO-7-UK) February 1974, Section 5.3
* CCITT Volume VIII. 1 Recommendation V3 “International Alphabet No. 5”.

7.3.2 ECHO

The instrument *echoes* all characters received by the serial interface, unless the echo function is disabled. (See Chapter 5, Section 5.8.3.)

7.3.3 INPUT COMMAND TERMINATOR AND CHARACTER FRAME

Valid command terminators for the serial interface are *carriage return, line feed,* or *semi-colon.*

The character frame always contains one start bit, eight data bits, one stop bit and no parity.

7.3.4 SERIAL INTERFACE CONNECTOR

Connection to RS423 devices is made via the 25-way sub-miniature D-type connector on the serial interface. See Fig. 7.5. The pin functions are. shown in the connector detail.

7.3.5 BAUD RATE SWITCHES

The Baud rate of the serial interface is set by miniature toggle switches on the rear panel of the instrument. This function is described below. The remaining interface functions are set from the [RS 423 CONFIGUREI menu (Chapter 5, Section 5.8.3).

Set the RS423 baud rate to the required value (from 110 to 9600) by means of the 8-way BAUD RATE switch (Fig. 7.5).

Only one of the eight switches should be set in the down position, under the required baud rate.

Axion Exhibit 1024
Axion v. Agilent

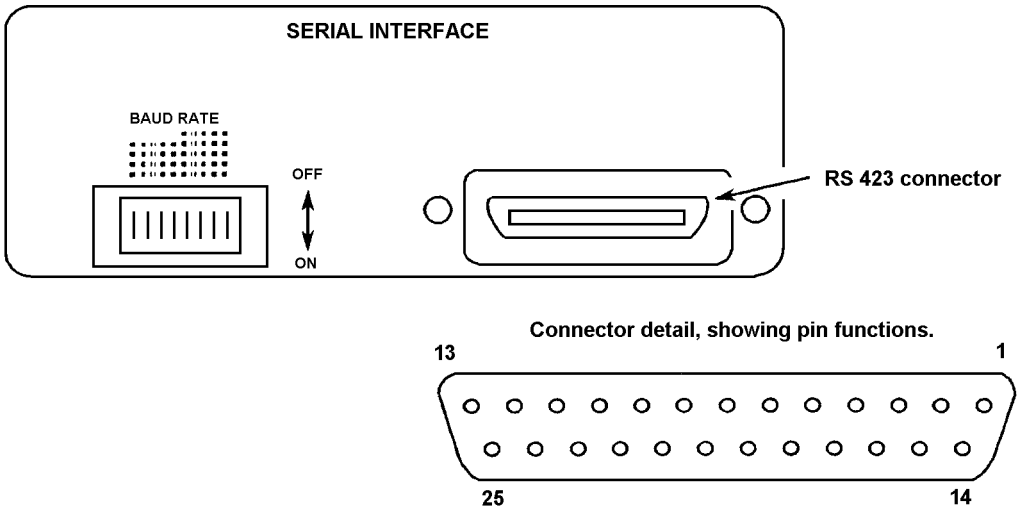

Pin 1 = Ground	Pin 4 = RTS (Request to Send)	Pin 7 = Ground
Pin 2 = Serial Data to instrument	Pin 5 = CTS (Clear to Send)	Pin 8 = DCD (Data Carrier Detect)
Pin 3 = Serial Data from instrument	Pin 6 = DSR (Data Set Ready)	Pin 20 = DTR (Data Terminal Ready)

Figure 7.5 - Serial interface (on instrument rear panel)

7.3.6 OUTPUT TO THE SERIAL INTERFACE

The output of measurement results to the serial interface is controlled by the [DATA OUTPUT] RS423 setting (Chapter 5, Section 5.8 1). *All, fail,* and *pass* results are output in ASCII, and *dump* results in binary The ASCII output can be selected for either a printer or a controller. Binary data can be interpreted only by a controller.

7.3.6.1 ASCII Output to a Printer

The *printer* format, selected from [RS423 CONFIGURE] MODE, is suitable for an 80 (or more) character-per-line printer. The results are separated by spaces, a complete result taking the form:

Variable Par. 1 Par. 2 Limits Check/Bin No Channel and error Time.

Each measurement result is terminated by an output *terminator,* selected from [RS423 CONFIGURE] TERM (Chapter.5, Section 5.8.3). Two of the terminators available include five *null* characters. These characters give a mechanical printer time to complete a carriage return, before receiving the next result. The exact content of the results output depends on the DISPLAY menu (Chapter 5, Section 5.5.4).

Column headings may be printed, or not, as selected by [FORMAT] HEADING on or *off.* Typical headings are:

FREQUENCY (Hz)	*CAPACITOR (F)*	*PARALLEL R. (ohms)*	*LIMIT CHECK*	*CHANNEL & ERROR*	*TIME*

Column headings and results are automatically re-output when menu changes are made that affect their validity, e.g. changing the DISPLAY [COORDINATES] from *r,*θ to a,b.

Axion Exhibit 1024
Axion v. Agilent

7.3.6.2 ASCII Output to a Controller

The *controller* format, selected from [RS 423 CONFIGURE] MODE, is the same as that of the ASCII output to a talker/listener on the GPIB (see Section 7.2.4.2). The output terminator and separator are selected from the [R5423 CONFIGURE] menu (Chapter 5, Section 5.8.3).

Headings are not output when the controller format is selected, and the last result is not re-output after menu changes. Use' the 'DO' remote command to read the last result again, e.g. after changing the display *source.*

7.3.6.3 Dump Output

In *dump* output, selected from the [DATA OUTPUT] menu, each measurement result is output in binary form.

No headings are available and the last result is not re-output after menu changes. Use the 'DO' remote command to read the last result again, e.g. after changing the DISPLAY SOURCE.

No separators or terminators are available, as they cannot be distinguished from binary data.

Axion Exhibit 1024
Axion v. Agilent

7.4 DUMP OUTPUT FORMAT, for RS423 and GPIB

There are two types of dump output, *dump* and *dump all.* The binary numbers which make up these outputs are all in IEEE 754 standard format.

7.4.1 "Dump"Output

For each measurement the *dump* output produces' three floating"point numbers':"

ffff	measurement frequency
aaaa	in-phase component of the displayed
bbbb	result quadrature component of the displayed result
e	single byte error code
l	single byte limits code

The coordinates available for the dump output are selected from the DISPLAY menu.

The single byte limit code (in 2s complement form) represents the result of a limits check: '1' = Hi, '-1' (= 255, or FF_H) = Lo, and '0' = pass.

7.4.2 "Dump All" Output

For each measurement the *dump all* output produces nine floating point numbers:

ffff	the measurement frequency
$nnnn_1$	the generator amplitude
$nnnn_2$	the generator bias
$aaaa_1$, $bbbb_1$	the in-phase and quadrature components of the Voltage 1 input
e	single byte error code
$aaaa_2$, $bbbb_2$	the in-phase and quadrature components of the Voltage 2 input
e	single byte error code
aaaa2, $bbbb_2$	the in-phase and quadrature components of the Current input
e	single byte error code

The only coordinates available for the *dump all* output are a,jb.

Axion Exhibit 1024
Axion v. Agilent

7.4.3 FLOATING POINT FORMAT ("Dump" and "Dump All" Data)

The floating point format conforms to the ANSI / IEEE Standard 754. It consists of a 4-byte (32 bit) floating point number, as shown below:

1	8 bits	23 bits
S	EXPONENT e	FRACTION f
	msb lsb	msb lsb

S = Sign bit

msb = most significant bit

lsb = least significant bit

The value of the number is $(-1)^s\, 2^{e-127}\,(1.f)$ provided that $0< e <255$

NOTE:

1. A zero sign bit indicates a positive number, a 1 sign bit indicates a negative number.
2. If e = 0 and f = 0,the value of the floating point number is zero.
3. If e = 255 and f = 0, the value of the floating point number is $\pm\infty$

EXAMPLE: Converting a 4-byte floating point number to decimal.

Byte 1 contains	01000001_2 (most significant byte)
Byte 2 contains	11000000_2
Byte 3 contains	00000000_2
Byte 4 contains	00000000_2 (least significant byte)

Arranged with the most significant byte on the left and the least significant byte on the right, these bytes form the following binary number:

		EXPONENT e	FRACTION f
Sign bit →	0	10000011	10000000000000000000000

From this:

The sign bit value of '0' indicates that the number is positive

The exponent value of $10000011_2 = 131_{10}$ represents an exponent of:

$$2^{131-127}$$
$$= 2^4$$
$$= 16_{10}$$

The fraction part

$$= 1.f_2$$
$$= 1.10000000000000000000000_2$$
$$= 1.5_2$$

Therefore the decimal equivalent of the floating point number is

$$1.5 \times 16 = +24$$

Axion Exhibit 1024
Axion v. Agilent

7.5 REMOTE/LOCAL CONTROL

The REMOTE/LOCAL facility enables the instrument to receive commands from either a *remote* or a *local* source. The remote facility is provided by the GPIB interface and has priority over local control.

The instrument offers two forms of local control:

Local 1 Commands accepted from the instrument front panel and/or from the serial interface. The two sources have equal priority.

Local 2 Commands accepted from the RS423 port only. No settings can be changed from the front panel, but the LOCAL key and the ON/OFF switch are still operative. The Menu keys can be used to examine, but not alter, the state of the controls.

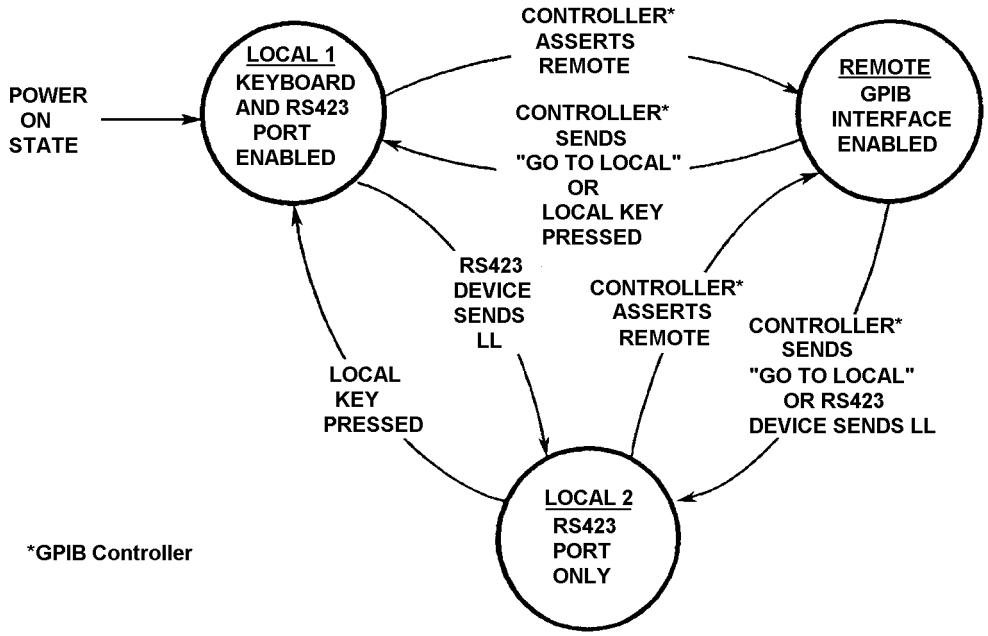

Figure 7.6 - REMOTE/LOCAL state diagram

The instrument powers up in LOCAL 1. Many GPIB controllers, however, automatically assert *remote* on power-up, in preparation for remotely controlling the system. Therefore, if the instrument is used in such a system it may be necessary to press the LOCAL key to allow local commands to be accepted. Figure 7.6 shows how the instrument control state is selected.

The program instructions for selecting LOCAL and REMOTE from the GPIB can be found in the GPIB controller operating manual. Note that a command to ‘Go to Local’ reselects the local state in use prior to the selection of REMOTE.

Axion Exhibit 1024
Axion v. Agilent

7.5.1 LOCAL LOCKOUT

The remote/local facility can have a local lockout condition superimposed by a command from the GPIB controller. Once local lockout is applied, control can be transferred only by the controller.

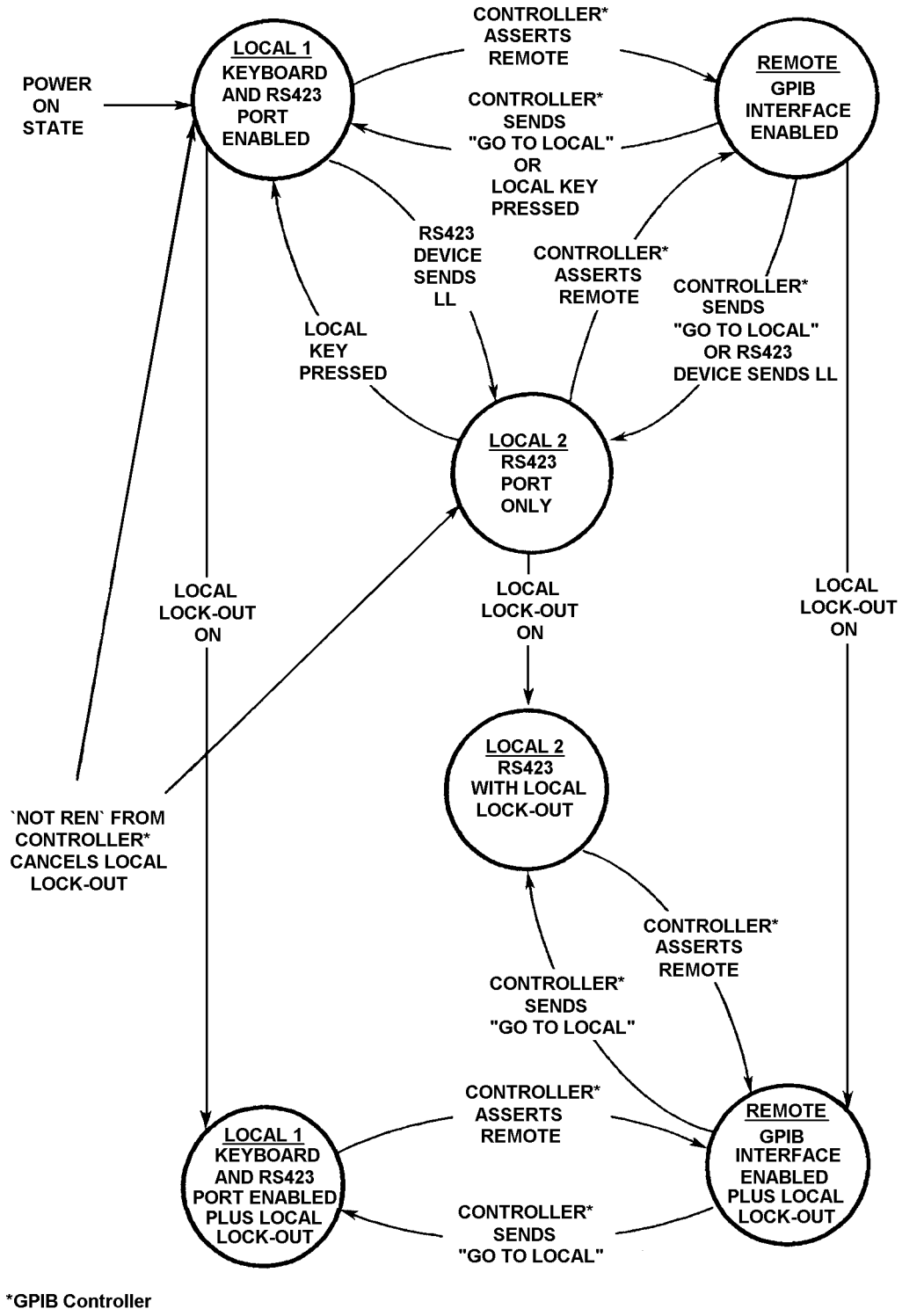

Figure 7.7 - State diagram of remote/local control with local lockout.

Axion Exhibit 1024
Axion v. Agilent

Local lockout prevents the control settings of the instrument being altered by unauthorized use of the front panel. Fig. 7.7 shows the relationship of local lockout to the remote and local states previously shown in Fig. 7.6.

As in Fig. 7.6, a GO TO LOCAL command from the controller reselects the local state previously in use.

The local lockout' state is cancelled' when the REMOTE ENABLE signal from the controller is negated, i.e. when the controller sends NOT REN.

7.5.2 COMBINED USE OF RS423 AND GPIB DEVICES

The instrument can be used in a system containing both GPIB and RS423 compatible devices.

For example, the GPIB controller could be a calculator with no recording capability, whilst the RS423 device could be a tape cassette unit, or a printer with no keyboard. Data requested by the GPIB controller, e.g. measurement results, are output also through the serial interface, provided that DATA OUTPUT for RS423 is enabled.

Conversely, if the instrument is set to *talk only,* and is connected to a *listen only* printer or plotter, data requested through the serial interface is sent also to the GPIB, provided that DATA OUTPUT for the GPIB is enabled.

However, if the instrument is set for operation as a talker/listener, data requested through the serial interface does not appear on the GPIB.

Axion Exhibit 1024
Axion v. Agilent

7.6 CONTROL PROGRAM EXAMPLES

To demonstrate the use of the GPIB port for remote control of the instrument, several examples are given of GPIB Controller programs. Each example is written as a series of abbreviated commands, including some BASIC programming language instructions. The programs are representational only and are not necessarily suitable for directly programming a Controller.

7.6.1 LANGUAGE USED IN PROGRAM EXAMPLES

The examples are intended to show the required sequence of events, as they affect the controls of the instrument. Other GPIB commands, such as Enable Signals and Addressing, are omitted. The most commonly used instructions are listed below, with a full explanation of their meaning.

Instruction	Meaning
OUTPUT “ “	Send to the instrument the string of characters within the inverted commas, plus a Command Terminator.
INPUT	Receive data from the instrument
INPUT A	Receive data from the instrument and store it in location A.
PRINT “FREQUENCY =”, A	Print the statement: Frequency = “the value stored in location A”.
DIM A$(100)	The Controller is instructed to allocate sufficient temporary store space to accomodate a maximum of 100 character strings. A string could consist of a Learnt Program Command, a stored reading from the file etc. The store area is given the name A$.
FOR I = 1 TO N INPUT A$(I)	This is a loop instruction telling the controller to store each line of the instrument’s output in area A$, from line 1 to the final line N.
NEXT I	The loop instruction terminates when I = N

Axion Exhibit 1024
Axion v. Agilent

7.6.2 EXAMPLE: Outputting Readings to the GPIB

The use of comma as separator and crlf as terminator is assumed.

Instruction	Meaning
OUTPUT “CV0”	Select co-ordinates a,b
OUTPUT “OP2,1”	Send all readings to the GPIB
OUTPUT “SI”	Make a Single measurement
INPUT F,A,B,E,L	Store the results of the measurement
PRINT “FREQ = “, F	Print the results of the measurement
PRINT “a = “, A	
PRINT “b = “, B	
PRINT “error = “, E	
PRINT “Limit check = “, L	

Note that the results sent to the GPIB ASCII port are from the same source channel and have the same co-ordinates as the results displayed on the Front Panel.

7.6.3 EXAMPLE: Plotting Results from the History File, Using a Controller

First set up the sweep and plotter parameters of the instrument, using the “OUTPUT *command*” statement. The commands are listed in Chapter 8.

The controller program should now continue:

Instruction	Meaning
OUTPUT “*SRE4”	Configure for interrupt at *end of sweep*.
OUTPUT “RE”	Start repetitive measurements
‘	
‘	(Wait for interrupt)
OUTPUT “*SRE8”	Configure SRQ for *end of plot*
OUTPUT “PL”	Start plot.
	(Configure instrument to talk and plotter to listen.)
	(Wait for interrupt.)

7.6.4 EXAMPLE: Outputting the History File to the GPIB

Instruction	Meaning
OUTPUT “*FP0?”	Query number of lines in File
INPUT N	N = number of lines in File
DIM A$(N)	Allocate temporary store space
OUTPUT “OP2,1”	Output all readings to GPIB
OUTPUT “FO”	List File
FOR I = 1 to N	Start plot.
INPUT A$(I)	Store all readings from File until I = N
NEXT I	

Axion Exhibit 1024
Axion v. Agilent

8
Remote Commands

Section		Page
8.1	**Introduction**	**8.1**
8.2	**Command Syntax**	**8.2**
8.3	**Command Summary**	**8.3**
	Generator	8.3
	Monitor	8.3
	Analysis	8.3
	Input V1	8.4
	Input V2	8.4
	Input I	8.4
	Sweep	8.4
	Sweep Limits	8.5
	Display	8.5
	Plotter	8.6
	Plotter Scaling	8.6
	Plot	8.7
	Plotter X-axis	8.7
	Plotter Y-axis, Main	8.7
	Plotter Y-axis, Overlay	8.7
	Data Output	8.8
	GPIB Configure	8.8
	IEEE 488 Protocol	8.8
	RS423 Configure	8.9
	File Configure	8.9
	Scaling	8.9
	Limits	8.10
	Binsort A	8.10
	Binsort B	8.10
	View File	8.10
	Vernier	8.11
	Status	8.11
	Store/Recall	8.11
	Learn Program	8.11
	Self Test	8.12
	Execute Program	8.12
	Mini-status	8.12
	Direct Actions:	8.12

Section		Page
	Query Commands:	
	Analyzer	8.12
	View File	8.12
	Program	8.12
	Self Test	8.12
	Firmware	8.12
	Calibration	8.13
	Statistics	8.13
	Calibration Commands	8.13
Command Index		**8.14**

Axion Exhibit 1024
Axion v. Agilent

8.1 INTRODUCTION

This chapter lists the instrument remote commands. The commands are the same for RS423 and GPIB-operation. They are presented in menu order to relate to Chapter 5, “Menu Terms”.

8.2 COMMAND SYNTAX

The majority of codes are qualified by a numeric argument. In the following lists:

F is a floating point number ± *n.nnnnnnn* E ± *xx,*

I is an integer up to 2 digits,

I,I is two integers of up to 2 digits each, separated by a comma.

Default settings are shown in italics.

Including a query (?) with a command code, in any position, returns the associated parameter setting. Additional query commands are available for examining control information not accessible in this way.

8.3 COMMAND SUMMARY

The command summary appears on pages 8.3 through 8.13.

Axion Exhibit 1024
Axion v. Agilent

Parameter	Command	Argument	Setting
GENERATOR			
TYPE	GT	0	*voltage*
		1	current
FREQ	FR *F*	10E-6 to 32E6	hertz
V. AMPL	VA *F*	0 to 3 (*f*≤10MHz)	volts
		0 to 1 (*f*>10MHz)	volts
V. BIAS	VB *F*	-40.95 to +40.95	volts
I. AMPL	IA *F*	0 to 60 $x10^{-3}$ (*f*≤10MHz)	amps
		0 to 20 $x10^{-3}$ (*f*>10MHz)	amps
I. BIAS	IB *F*	-100 x 10^{-3} to +100 x 10^{-3}	amps
Waveform (For test and cal. purposes only.)	WF *I*	0	*sine*
		1	square
MONITOR			
ENABLE	ME *I*	0	*monitor off*
		1	monitor V1
		2	monitor I
V. LIMIT	VC *F*	0 to 3 (*f*≤10MHz)	volts
		0 to 1 (*f*>10MHz)	volts
I. LIMIT	IC *F*	0 to 60 $x10^{-3}$ (*f*≤10MHz)	amps
		0 to 20 $x10^{-3}$ (*f*>10MHz)	amps
ERROR%	AE *F*	1 to 50	%
ANALYSIS			
∫ TIME	IS *F*	0.01 to 1E5	seconds
DELAY	MS *F*	0 to 1E5	seconds
AUTO ∫	AU *I*	0	*off*
		1	long ∫ on V1
		2	short ∫ on V1
		3	long ∫ on V2
		4	short ∫ on V2
		5	long ∫ on I
		6	short ∫ on I
MODE	MD *I*	0	*normal*
		1	group delay*
		2	auto impedance
*group delay %	GP *F*	0 to 50	+ %FREQ
	GN *F*	0 to 50	- %FREQ

Axion Exhibit 1024
Axion v. Agilent

Parameter	Command	Argument	Setting
INPUT V1			
RANGE	RA *I,I*	1,0	*auto*
		1,1	30mV
		1,2	300 mV
		1,3	3V
COUPLING	DC *I,I*	1,0	*dc*
		1,1	ac
INPUT	IP *I,I*	1,0	single
		1,1	*differential*
OUTER	OU *I,I*	1,0	*grounded*
		1,1	floating
INPUT V2			
RANGE	RA *I,I*	2,0	*auto*
		2,1	30mV
		2,2	300 mV
		2,3	3V
COUPLING	DC *I,I*	2,0	*dc*
		2,1	ac
INPUT	IP *I,I*	2,0	single
		2,1	*differential*
OUTER	OU *I,I*	2,0	*grounded*
		2,1	floating
INPUT I			
RANGE	RA *I,I*	3,0	*auto*
		3,1	6μA
		3,2	60μA
		3,3	600μA
		3,4	6mA
		3,5	60mA
COUPLING	DC *I,I*	3,0	*dc*
		3,1	ac
SWEEP			
ENABLE	SW *I*	0	*off*
		1	lin freq
		2	log freq
		3	amplitude
		4	bias
UP/DOWN	SD *I*	0	*up*
		1	down
Δ LOG	SF *F*	2 to 50 x 10^3	points/sweep
Δ LIN	LF *F*	2 to 50 x 10^3	points/sweep
	HF *F*	1 x 10^{-5} to 20 x 10^6	units/step

Axion Exhibit 1024
Axion v. Agilent

Parameter	Command	Argument	Setting
SWEEP LIMITS			
FREQ	FM *F*	10E-6 to 32E6	min. freq, hertz
	FX *F*	10E-6 to 32E6	max. freq, hertz
V. AMPL	VM *F*	0 to 3 ($f \leq 10$MHz)	min. ampl, volts
		0 to 1 ($f > 10$MHz)	min. ampl, volts
	VX *F*	0 to 3 ($f \leq 10$MHz)	max. ampl, volts
		0 to 1 ($f > 10$MHz)	max. ampl, volts
V. BIAS	BM *F*	-40.95 to +40.95	min. bias, volts
	BX *F*	-40.95 to +40.95	max. bias, volts
I. AMPL	IM *F*	0 to 60 x 10^{-3} ($f \leq 10$MHz)	amps
		0 to 20 x 10^{-3} ($f > 10$MHz)	amps
	IX *F*	0 to 60 x 10^{-3} ($f \leq 10$MHz)	amps
		0 to 20 x 10^{-3} ($f > 10$MHz)	amps
I. BIAS	QM *F*	-100 x 10^{-3} to +100 x 10^{-3}	amps
	QX *F*	-100 x 10^{-3} to +100 x 10^{-3}	amps
DISPLAY			
VARIABLE	VI *I*	0	*frequency*
		1	amplitude
		2	bias
Source	SO *I,I*	0,*n*	FUNCTION (*n*)
		1,0	V1
		2,0	V2
		1,2	V1/V2
		2,1	V2/V1
		3,0	I
		1,3	*Z1=V1/I*
		3,1	Y1=I/V1
		2,3	Z2=V2/I
		3,2	Y2=I/V2
V coordinates	CV *I*	0	a,b
		1	r, θ
		2	*r(dB),* θ
		3	r,t
		4	r(dB),t
Func. coordinates	FV *I*	0	a,b
		1	*r,* θ
		2	r(dB), θ
		3	r,t
		4	r(dB),t
		5	L (orC),R
		6	L (orC),Q
		7	L (orC),D
I coordinates	CI *I*	0	a,b
		1	*r,* θ

Axion Exhibit 1024
Axion v. Agilent

Parameter	Command	Argument	Setting
DISPLAY (Cont.)			
Z coordinates	CZ *I*	0	R,X
		1	Z,θ
		2	*L (orC),R*
		3	L (orC),Q
		4	L (orC),D
Y coordinates	CY *I*	0	G,B
		1	Y,θ
		2	*L (orC),R*
		3	L (orC),Q
		4	L (orC),D
PHASE	UW *I*	0	*normal*
		1	unwrapped
ERROR BEEP	BP *I*	0	off
		1	*on*
CIRCUIT	CC *I*	0	series L,R
		1	series C,R
		2	parallel L,R
		3	*parallel C,R*
		4	auto
(error message)	CL		clear
PLOTTER			
MODE	VE *I*	0	point
		1	*vector*
TEXT	PT *I*	0	off
		1	*on*
GRID	GD *I*	0	off
		1	*on*
AXES	PA *I*	0	off
		1	*on*
DEVICE	PD *I*	0	*HPGL*
		1	ESGL
PLOTTER SCALING			
SIZE	AA *I*	0	*A4*
		1	A3
		2	scaled
X-MIN	XB *F*	0 to 32000	
X-MAX	XT *F*	0 to 32000	
Y-MIN	YB *F*	0 to 32000	
Y-MAX	YT *F*	0 to 32000	
PLOTTER TITLE	TI *text*		

Axion Exhibit 1024
Axion v. Agilent

Parameter	Command	Argument	Setting
PLOT	PL		
PLOTTER			
X-AXIS			
ITEM	XI *I*	0	*variable*
		1	par 1
		2	par 2
LIMITS	XL *I*	0	*auto*
		1	manual
MINIMUM	XM0, *F*	-999×10^{15} to $+999 \times 10^{15}$	
MAXIMUM	XM1, *F*	-999×10^{15} to $+999 \times 10^{15}$	
LIN/LOG	XZ *I*	0	*auto*
		1	linear
		2	log
PEN	XP *I*	1 to 9	pen ( )
PLOTTER			
Y-AXIS MAIN			
ITEM	YI *I*	0	*variable*
		1	*par 1*
		2	par 2
LIMITS	YL *I*	0	*auto*
		1	manual
MINIMUM	YM0, *F*	-999×10^{15} to $+999 \times 10^{15}$	
MAXIMUM	YM1, *F*	-999×10^{15} to $+999 \times 10^{15}$	
LIN/LOG	YZ *I*	0	*auto*
		1	linear
		2	log
PEN	YP *I*	1 to 9	pen ( )
PLOTTER			
Y-AXIS OVERLAY			
ITEM	OI *I*	0	off
		1	variable
		2	par 1
		3	*par 2*
LIMITS	OL *I*	0	*auto*
		1	manual
		2	same as main
MINIMUM	OM0, *F*	-999×10^{15} to $+999 \times 10^{15}$	
MAXIMUM	OM1, *F*	-999×10^{15} to $+999 \times 10^{15}$	
LIN/LOG	OZ *I*	0	*auto*
		1	linear
		2	log
PEN	VP *I*	1 to 9	pen ( )

Axion Exhibit 1024
Axion v. Agilent

Parameter	Command	Argument	Setting
DATA OUTPUT			
RS423	OP *I,I*	1,0	*off*
		1,1	all
		1,2	fail
		1,3	pass
		1,4	dump
		1,5	dump all
GPIB	OP *I,I*	2,0	*off*
		2,1	all
		2,2	fail
		2,3	pass
		2,4	dump
		2,5	dump all
		2,6	plotter
FILE	OP *I,I*	3,0	off
		3,1	*all*
		3,2	fail
		3,3	pass
HEADING	RH *I*	0	off
		1	*on*
GPIB CONFIGURE			
PAR ROLL	PP *I*	0	*unconfigure*
		1 to 8	device identity
P SENSE	PS *I*	o	*false*
		1	true
TERM	OT *I*	0	cr lf
		1	*cr lf+EOI*
		2	cr
		3	cr+EOI
SEP	OS *I*	0	*comma*
		1	terminator
IEEE 488 Protocol			
Clear status.	*CLS		
Event status enable.	*ESE *I*	0 to 255	configure
Event status enable?	*ESE?		query
Event status register?	*ESR?		query
Device identity string?	*IDN?		return errors
Learn device set-up?	*LRN?		
Enable oper`n complete.	*OPC		
Recall set-up.	*RCL		
Reset.	*RST		
Store set-up.	*SAV	0 to 255	
Service request enable.	*SRE *I*		query
Service request enable?	*SRE?		query
Read status byte query.	*STB?		returns test result
Self test query.	*TST?		

Axion Exhibit 1024
Axion v. Agilent

Parameter	Command	Argument	Setting
RS423			
CONFIGURE			
MODE	RR *I*	0	controller
		1	*printer*
ECHO	EC *I*	0	off
		1	*on*
TERM	RT *I*	0	*cr lf*
		1	cr lf and null
		2	cr
		3	cr and null
SEP	RP *I*	0	*comma*
		1	terminator
XOFF/XON	XO *I*	0	*enable*
		1	disable
FILE			
CONFIGURE			
FORMAT	FG *I*	0	*normal*
		1	group delay
CLEAR	MC *I*	0	*auto*
		1	manual
STATUS	SX *I*	0	*par 1*
		1	par 2
SCALING			
NORM.	NO *I*	0	*off*
		1	on
		2	evaluate
NULL	NL *I*	0	*off*
		1	on
		2	evaluate
CONSTS	CO *I,I,F,F*	1 to 9	constant no.
		0	r,θ
		1	a,b
		-999×10^{15} to $+999 \times 10^{15}$	r,θ,a, or b
FUNCT.	FU *I, text*	1 to 18	function no.
Clear Function	CF *I*	1 to 18	function no.
DEV Δ	DE *I*	0	*off*
		1	Δ
		2	Δ%
DEV Δ STORE	DS *I*	1 to 9	store no.

Axion Exhibit 1024
Axion v. Agilent

Parameter	Command	Argument	Setting
LIMITS			
ITEM	LI *I*	0	*off*
		1	paramenter 1
		2	parameter 2
LOWER LIMIT	LV *0, F*	$-999x10^{12}$ to $+999x10^{12}$	
UPPER LIMIT	LV *1, F*	$-999x10^{12}$ to $+999x10^{12}$	
BINSORT A			
ENABLE	BN *I*	0	*off*
		1	continuous
		2	fixed count
		3	random
STEP SIZE	BC *I*	0 to 255	fixed cnt/random
ITEM	BI *I*	0	*par* 1 sort
		1	par 2 sort
BINS	BZ *I*	1 to 32	bin number
Par 1 value	VF *F*	$-999x10^{12}$ to $+999x10^{12}$	base value, par 1
Par 2 value	VL *F*	$-999x10^{12}$ to $+999x10^{12}$	base value, par 2
MIN%	BL *F*	$-999x10^{12}$ to $+999x10^{12}$	lower tolerance
MAX%	BU *F*	$-999x10^{12}$ to $+999x10^{12}$	upper tolerance
STOP	BS *I*	0	*No automatic stop.*
(after *n* meas.)		1	Stop after n comps
Value of *n*	BF *F*	0 to $999x10^{12}$	No. of components (*n*) to be tested.
BINSORT B			
RETRY	BR *I*	0 to 255	no. of “tries”
LEVELS	BV *I*	0	0V, +5V levels
		1	0V, +18V levels
LOGIC	BG *I*	0	*negative* sense
		1	positive sense
VIEW FILE			
DISPLAY	FD *I*	0	beginning of file,
		1	end of file,
		2	next line,
		3	previous line.
LIST	FO		output file.
CLEAR	FC		clear file.
LINE	FL *I*	1 to 405	output specified line.

Axion Exhibit 1024
Axion v. Agilent

Parameter	Command	Argument	Setting
VERNIER			
FREQ	VR 0		
AMPL	VR 1		
BIAS	VR 2		
X-MIN	VR 3	0 to 32000	
Y-MIN	VR 4	0 to 32000	
X-MAX	VR 5	0 to 32000	
Y-MAX	VR 6	0 to 32000	
Step Vernier	SP *F*	-20E6 to 20E6	
STATUS			
PROGRAM	ST 0		
μP	ST1		
INTERFACE	ST 2		
STORE	ST 3		
FILE	ST 4		
FUNCTION	ST 5		
CONST.	ST 6		
RESULTS	ST 7		
STATS	ST 8		
Next page	PG 0		
Previous page	PG1		
STORE/RECALL			
SET-UP			
STORE	SS *I*	1 to 16	store no.
RECALL	RS *I*	1 to 16	store no.
CLEAR	CS *I*	1 to 16	store no.
RESULT			
STORE	SR *I*	1 to 9	store no.
LEARN PROGRAM			
LEARN	# L *I*	1 to 9	program no.
QUIT	# Q		
EDIT	# E *I*	1 to 9	program no.
INSERT	# I		
DELETE	# D		
NEXT	# F		
PREV	# B		
QUIT	# Q		
CLEAR	# C *I*	1 to 18	program no.
COPY	# K *I, I*	1 to 18, 1 to 18	program nos
JUMP	JP *I*	1 to 99	line no.
LIST	# P *I*	1 to 18	program no.

Axion Exhibit 1024
Axion v. Agilent

Parameter	Command	Argument	Setting
SELF TEST			
TEST	TT 0		
INIT	TT 1		
RESET	TT 2		
TIME	TM *I, I*	0 to 23, 0 to 59	hours, minutes
	TM0?		hours?
	TM1?		minutes?
	TM2?		seconds?
EXECUTE PROGRAM	EP *I*	1 to 18	program no.
MINI-STATUS	SM *I*	0	next
		1	prev
DIRECT ACTIONS:			
BREAK	BK		
LOCAL	LL		
REMOTE	RM		
PAUSE/CONT.	CP		
RECYCLE	RE		
SINGLE	SI		
SWEEP HOLD	HS		
Output last results.	DO		
Clear errors.	CE		
ANALYZER QUERIES:			
AUTO ∫ TIME	AI?		
AUTORANGE		Returns actual range used for measurement when Range is set to Autorange. *(To query Range set, use RAn?, where n=1 for V1, 2 for V2, 3 for I)*	
VOLTAGE 1	AR0?		1 = 30mV
VOLTAGE 2	AR1?		2 = 300mV
CURRENT	AR2?		3 = 3V
VIEW FILE QUERIES:			
Readings taken	NR?		
Readings accepted	NA?		
Readings filed	FP *I?*	0	no. of readings?
		1	file pointer?
PROGRAM QUERY	PN *I?*		No. of instructions for prog. *n*

Axion Exhibit 1024
Axion v. Agilent

Parameter	Command	Argument	Setting
SELF TEST QUERIES:			
Test results	TS?		
Last error	ER?		
FIRMWARE QUERY	VN?		version number
CALIBRATION QUERIES			
Week of cal.	WK?		
Place of cal.	PC?		
Year of cal.	YR?		
STATISTICS QUERIES			
Standard dev.	DV?		
Maximum	MA?		
Minimum	M I?		
Mean	MU?		
Variance	VS?		
CALIBRATION COMMANDS*			
Ideal cal. value	CA*F*	0 to 5	
Calibration mode	CM*I*	0	Normal first pass.
		1	No magnitue first pass.
		2	No phase first pass.
		3	Second pass: phase range-range adjustment.
		4	Generator calibration.
		5	Clear calibration data.
Forcing w/f freq.	DF *F*		Hz
Waveform	WF *I*	0	sine
		1	square
Year of calibration	YR *I*		
Week of calibration	WK *I*	1 to 53	
Calibration place	PC *text*	“.....”	

* These commands are obeyed only when the instrument is operating in the calibration mode. The use of the calibration commands is described in the 1255/1260 Maintenance Manual.

Axion Exhibit 1024
Axion v. Agilent

COMMAND INDEX

Note: In the remote commands listed below
- *I* = integer,
- *F*= floating point number.

# B	edit program: go to previous line
# C *I*	clear program
# D	edit program: delete
# E *I*	edit program
# F	edit program: go to next line
# I	edit program: insert
# K *I, I*	copy program
# L *I*	learn program
# P *I*	list program
# Q	quit program
*CLS	clear status
*ESE	event status enable
*ESE?	event status enable query
*ESR?	event status register query
*IDN?	identification query
*OPC	operation complete
*RCL	recall
*RST	reset
*SAV	save
*SRE	service request enable
*SRE?	service request enable query
*STB?	read status byte query
*TST?	self-test query
AA *I*	plotter scaling:size
AE *F*	monitor error%
AI?	auto-integration time query
AR1?	autorange query, voltage 1 input
AR2?	autorange query, voltage 2 input
AR3?	autorange query, current input
AU *I*	analyzer auto-integration
BC *I*	binsort A: step size
BF *F*	no. of meas. (*n*) after stop
BG *I*	binsort B: logic sense
BK	break
BL *F*	binsort A: bin min.%
BM *F*	sweep limits: V bias min.
BN *I*	binsort A: enable
BP *I*	error beep
BR *I*	binsort B: no. of retries
BS *I*	binsort A: stop after n meas.
BU *F*	binsort A: bin max.%
BV *I*	binsort B: logic levels
BX *F*	sweep limits: V bias max.
BZ *I*	binsort A: bin number

CA *F*	ideal calibration value
CC *I*	display: circuit
CE	clear error code
CF *I*	clear function
CI *I*	display: current coordinates
CL	clear error message
CM *I*	calibration mode
CO *I,I,F,F*	scaling constant
CP	pause/continue (program)
CV *I*	display: voltage coordinates
CS *I*	clear set-up
CY *I*	display: admittance coordinates
CZ *I*	display: impedance coordinates
DC1,*I*	input V1 coupling
DC2,*I*	input V2 coupling
DC3,*I*	input I coupling
DE *I*	scaling: dev Δ
DF *F*	Forcing waveform frequency
DO	output last result
DS *I*	scaling: dev Δ store
DV?	standard deviation query
EC *I*	output echo (RS423)
EP *I*	execute program
ER?	last error query
FC	clear file
FD *I*	display file
FG *I*	file format
FL *I*	output file line
FM *F*	sweep limits frequency min
FO	output file
FP *I?*	file query: blocks filed/pointer
FR *F*	generator frequency
FU *I, text*	scaling function
FV *I*	display: function coordinates
FX *F*	sweep limits: frequency max.
GD *I*	plotter grid
GN *F*	group delay, negative
GP *F*	group delay, positive
GT *I*	generator type
HF *F*	linear sweep: units/step
HS	sweep hold
IA *F*	generator current amplitude
IB *F*	generator current bias
IC *F*	monitor current limit
IM *F*	sweep limits: I amplitude min.

Axion Exhibit 1024
Axion v. Agilent

IX *F*	sweep limits: I amplitude max.
IP1,*I*	input V1 single/diff.
IP2,*I*	input V2 single/diff.
IS *F*	analyzer integration time
JP *I*	jump program line no.
LF *F*	linear sweep: points/sweep
LI *I*	limits check item
LL	local
LV0,*F*	limits check: lower limit
LV1,*F*	limits check: upper limit
MA?	statistics query:maximum
MC *I*	file clear: auto/manual
MD *I*	analyzer mode
ME *I*	analyzer monitor
MI?	statistics query: minimum
MS *F*	analyzer delay
MU?	statistics query: mean
NA?	file query: readings accepted
NL *I*	null
NO *I*	normalize
NR?	file query: readings taken
OI *I*	plotter Y-axis overlay item
OL *I*	plotter Y-axis o'lay limits: auto/man.
OM0,*F*	plotter Y-axis overlay limits: min.
OM1,*F*	plotter Y-axis overlay limits: max.
OP1,*I*	data putput (RS423)
OP2,*I*	data output (GPIB)
OP3,*I*	data output (file)
OS *I*	command separator (GPIB)
OT *I*	command terminator (GPIB)
OU1,*I*	input V1: grounded/floating
OU2,*I*	input V2: grounded/floating
OZ *I*	plotter Y-axis overlay log/lin
PA *I*	plotter axes
PC?	place of last calibration
PC *text*	calibration place
PD *I*	plotter device
PG0	go to next status page
PG1	go to previous status page
PL	plot (from file)
PN *I?*	program query (length)
PP *I*	parallel poll configure (GPIB)
PS *I*	parallel poll sense (GPIB)
PT *I*	plotter text enable
QM F	sweep limits: I bias, min.
QX F	sweep limits: I bias, max.
RA1,*I*	input V1 range
RA2,*I*	input V2 range
RA3,I	input I range
RE	recycle measuments
RH *I*	data output: heading
RM	remote
RP *I*	command separator (RS423)
RR *I*	output mode (RS423)
RS *I*	recall set-up
RT *I*	command terminator (RS423)
SD *I*	sweep up/down
SF *F*	log sweep: points/sweep
SI	single measurement
SM0	go to next mini-status page
SM1	go to previous mini-status page
SO*I,I*	display: source
SP *F*	step vernier
SR *I*	store result
SS *I*	store set-up
ST0	program status
ST1	microprocessor status
ST2	interface status
ST3	store status
ST4	file status
ST5	scaling function status
ST6	scaling constant status
ST7	results status
ST8	statistics status
SV *I*	serial poll configure (GPIB)
SW *I*	sweep enable
SX *I*	staticised result
TI *text*	plotter title
TM *I,I*	set time
TS?	test results query
TT0	self test
TT1	initialize
TT2	reset
UW *I*	display: phase normal/unwrapped
VA *F*	generator voltage amplitude
VB *F*	generator voltage bias
VC *F*	monitor voltage limit
VE *I*	plotter mode
VF *F*	parameter 1 value
VL *F*	parameter 2 value
VI *I*	display: variable
VM *F*	sweep limits: V amplitude min.
VN?	version number

Axion Exhibit 1024
Axion v. Agilent

VP *I*	plotter Y-axis overlay pen
VR0	frequency vernier
VR1	amplitude vernier
VR2	bias vernier
VR3	plotter X-min. vernier
VR4	plotter Y-min. vernier
VR5	plotter X-max. vernier
VR6	plotter Y-max. vernier
VS?	statistics query: variance
VX *F*	sweep limits: V amplitude max.
WF *I*	calibration waveform
WK *I*	calibration week
WK?	week of last calibration
XB *F*	plotter scaled size: X-min.
XI *I*	plotter X-axis item
XL *I*	plotter X-axis limits: auto/manual
XM0,*F*	plotter Y-axis limits: min.
XM1,*F*	plotter Y-axis limits: max.
XO *I*	XOFF/XON select (RS423)
XP *I*	plotter X-axis pen
XT *F*	plotter scaled size: X-max.
XZ *I*	plotter X-axis lin/log
YB *F*	plotter scaled size: Y-min.
YI *I*	plotter Y-axis item
YL *I*	plotter Y-axis limits: auto/man.
YM0,*F*	plotter Y-axis limits: min.
YM1,*F*	plotter Y-axis limits: max.
YP *I*	plotter Y-axis pen
YR *I*	calibration year
YR?	year of last calibration
YT *F*	plotter scaled size: Y-max.
YZ *I*	plotter Y-axis log/lin

Axion Exhibit 1024
Axion v. Agilent

9
Messages and Error Codes

Section	*Page*
9.1 Introduction	**9.2**
9.2 Command Summary	**9.3**
Group 0: Command Structure	9.3
Group 1: Learn Program	9.3
Group 2: Combined Parameters	9.4
Group 3: Generator	9.5
Group 4: Learnt Program; History File; Vernier	9.5
Group 5: Missing Modules	9.6
Group 6: Illegal input/Output	9.6
Group 7: System/Calibration	9.7
Group 8: Measurement Validity	9.8
Group 9: Store/recall	9.8

Axion Exhibit 1024
Axion v. Agilent

9.1 INTRODUCTION

Displayed messages tell the user:

a) that an operation has been completed,

b) that an undesirable situation exists, or

c) that the requested operation is not possible.

Each message is preceded by number, e.g. “81. INPUT OVERLOAD”. Where necessary, this number is included in the data output to remote devices as an error code. Messages are accompanied by a *beep*, unless this is switched off from [DISPLAY] ERROR BEEP. A message is displayed only briefly but can be recalled using the STATUS menu (μP, first page, LAST ERROR) or the ER? remote command.

Messages are classified according to the first digit of the message number. The meaning of each message is explained in this chapter, under the class number and area of application.

Axion Exhibit 1024
Axion v. Agilent

9.2 ERROR CODE SUMMARY

9.2.1 GROUP 0: COMMAND STRUCTURE

MESSAGE	*EXPLANATION*
01. UNKNOWN COMMAND	Command not included in instrument command set
02. ARG MISMATCH	Command contained the wrong type, or wrong number, of arguments.
03. OUT OF RANGE	Argument value out of range.
04. FORMAT ERROR	Floating point format error. Attempt made to enter a floating point number in an incorrect format, e.g. 1.2.5E2 instead 1.25E2.
05. ILLEGAL REQUEST	Illegal request for parameter value. Some control parameters have no value, e.g. HS (sweep hold).
06. INVALID FUNCTION	Function syntax error.
07. NO. OUT OF RANGE	Integer out of range for store or constant in scaling function.
08. INVALID SYMBOL	Attempt made to enter an invalid symbol in scaling function.
09. AMPL ILL. FOR HF	Attempt made to enter an amplitude >1V at a frequency >10MHz.

9.2.2 GROUP 1: LEARNT PROGRAM

MESSAGE	*EXPLANATION*
11. ILLEGAL EDIT	After EDIT has been selected, with an E*n* command, the only valid commands are: #F Select next instruction. #B Select previous instruction. #I Insert command(s) that follow as program instruction(s). #D Delete presently selected instruction. #Q Quit edit.
12. ILLEGAL COMMAND	Command cannot be learnt. Some commands, e.g. E*n* (edit), cannot be used as learnt program instructions.
13. NO SUCH PROGRAM	Program does not exist, under number specified.
14. NESTING ERROR	Invalid recursion attempted. A program can execute itself only if the *execute program* instruction (EP*n*) is the last instruction entered before *Q (quit).

(Continued on next page.)

Axion Exhibit 1024
Axion v. Agilent

	Or, program “nesting” to more than five levels attempted. For example, the sequence:
	P1:EP2→ P2:EP3→ P3:EP4→ P4:EP5→ P5:EP6→ P6:EP7 results in error message 14 at the command EP7. (P1:EP2 means “Program 1 commands the execution of Program 2”, and so on.) However, if EP7 were EP1 then the sequence would be valid - just.
15. PROGRAM RUNNING	Attempt made to edit a running program. Stop the program, using BREAK, and try again.
16. PROG. CHKSUM ERR.	Program checksum error. When learnt programs are stored in memory a checksum is calculated and stored with the program data. Before a stored program can be used, a new checksum is calculated, and compared with the original. If the checksums disagree, the stored data is presumed to have been corrupted. The program is not executed and ERROR 16 is displayed.
	The remedy is to initialize the instrument: the SUPERVISOR mode must be selected if the program number is 10 or above.
17. PROGRAM EXISTS	Attempt made to learn a program, using the number of an existing program. Previously learnt programs must be cleared before another program can be learnt under the same number.
18. PROG. CLEARED	Specified program has been cleared.
19. COPY COMPLETE	Specified program has been copied.

9.2.3 GROUP 2: COMBINED PARAMETERS

MESSAGE	*EXPLANATION*
20. SWEEP COMPLETE	A measurement sweep has been completed.
21. SWEEP NOT SET UP	Sweep limits, or increment/decrement, not entered.
	Or, maximum<minimum.
22. GEN OVERLOADED	Generator overloaded, due to excessive peak current demand, i.e. peak ac+dc.100mA.
23. NULL/NORMALIZED	Nulling or normalization complete.
24. ILL NULL SOURCE	Source for null must be V1/I, V2/I, I/V1, I/V2.
25. PLOTTER LIM. ERROR	X-MIN greater than X-MAX, or Y-MIN greater than Y-MAX, in [PLOTTER SCALING] menu. Or, invalid MINIMUM or MAXIMUM value entered for a log item in the [PLOTTER X-AXIS] or [PLOTTER Y-AXIS] menu.

Axion Exhibit 1024
Axion v. Agilent

27. GPIB/PLOTTER ERR.	If results are to be plotted from the history file, the GPIB data output should be set to [off]. Or, if results are to be plotted as measurements are made, the GPIB data output should be set to [plotter].
28. NUL/NORMALIZE ON	You are not allowed to change the sweep parameters when *null* or *normalize* is selected.
29. RENULL/NORMALIZE	Present null/normalization data invalid, due to change in sweep parameter(s) or null/normalization not yet done.

9.2.4 GROUP 3: GENERATOR

MESSAGE	*EXPLANATION*
31. GENERATOR KILLED	Generator output *killed*. KILL signal applied to rear panel connector: inner shorted to outer, or inner held at TTL logic `0`.
32. GENERATOR O/LOAD	Generator overload, or power fail.
34. GEN RESTART	Generator output reinstated. KILL signal removed from rear panel connector.

9.2.5 GROUP 4: LEARNT PROGRAM; HISTORY FILE; VERNIER

MESSAGE	*EXPLANATION*
40. FILE CLEARED	History file cleared.
41. LINE NO. ERROR	Line number specified in a *jump* instruction (JP*i*) was not found. (Line numbers can be assigned only in remotely compiled programs).
42. ILLEGAL JUMP	*Jump* has been commanded without *learn program* selected.
43. OUT OF RANGE	Vernier adjustment attempted outside parameter range, when parameter is already at maximum value. (The first attempt to enter a value outside the parameter range, with the present setting in range, results in the parameter being set to the maximum value: no error message is given at this time.)
44. FILE EMPTY	History file empty.
45. ILL FILE ACCESS	Illegal file access attempted. It is illegal to display, list, or clear the history file whilst the analyzer is running. Or plot attempted whilst measurement in progress. (Plot uses file contents.)

Axion Exhibit 1024
Axion v. Agilent

46. ILL FILE SIZE — Sweep too large. With [on] or [evaluate] selected for null or normalize the following max. file sizes apply:

	Analyzer Mode	Max. File Size
null	normal	280
null	group delay	243
normalize	normal	243
normalize	group delay	192

47. FILE NOT EMPTY — History file not empty. Attempt made to alter the file format before clearing the file contents.

48. G. DELAY/FILE ERR. — Incompatible file format. The analyzer is operating in *group delay* MODE, whilst the history file FORMAT is set for *normal* measurements. Initially the message is just a warning, but any attempt to display group delay parameters will cause the message to be repeated.

49. VERNIER N/A — Attempt made to adjust plotter parameters with vernier whilst recycled measurements are being made. Or sweep in progress.

9.2.6 GROUP 5: MISSING MODULES

These messages are returned when an attempt has been made to use a hardware module (printed circuit board) that is not fitted.

MESSAGE	*EXPLANATION*
50. NO SUCH ANALYZER	Analyzer not fitted.
52. NO GENERATOR	Generator not fitted.
53. NO HF GENERATOR	H F Generator not fitted.
54. NO ANALYZER CTRL	Analyzer control not fitted.
55. NO SYNTHESIZER	Synthesizer not fitted.
56. NO HF SYNTH.	H F Synthesizer not fitted.

9.2.7 GROUP 6: ILLEGAL INPUT/OUTPUT

MESSAGE	*EXPLANATION*
60. ILL. I/O CHANGE	Input/output device changed during *learn* sequence. The input/output device (controller/front panel) was changed whilst a program being learnt. The program was terminated automatically but remains usable up to the point where the change was made.
61. DEV. NOT ENABLED	Attempt made to change operating conditions from a non-enabled input/output device. For example, an RS423 device has attempted to send commands whilst the instrument is under *local lock-out* GPIB control. For more information on the combined use of RS423 and GPIB devices see Chapter 7, Section 7.5.2.

Axion Exhibit 1024
Axion v. Agilent

(62) WARNING:V1 NOT DIFF	Displayed if single-ended inputs are selected for the Voltage 1 input when an impedance measurement is made. Select differential inputs, otherwise the measurement will include the impedance of the current analyzer.
(63) WARNING:V2 NOT DIFF	Displayed if single-ended inputs are selected for the Voltage 2 input when an impedance measurement is made. Select differential inputs, otherwise the measurement will include the impedance of the current analyzer.
64. AUTO-CLEAR OFF	For NULL or NORMALIZE set CLEAR in FILE CONFIGURE to [auto].
65. INTERLOCK	Interlock signal negated during a binsort. Binsort suspended.
66. OPEN LOOP MODE	The component handler has asserted the SOS line before measurement completion. The handler is now in open loop mode. Measurements will continue in this mode, but are unlikely to be valid.
67. SORTING FINISHED	The specified number of components have been sorted. To sort another batch another BF command must be sent or stop check must be disabled (BS=0).

9.2.8 GROUP 7: SYSTEM/CALIBRATION

MESSAGE	*EXPLANATION*
70. OUT OF MEMORY	No further memory is available for the operation attempted. To make more room, delete any unwanted programs/functions and/or reduce size of program. ERROR 70 is also returned when attempt is made to copy to non-volatile memory when this has insufficient room.
71. NV RAM CORRUPTED	Non-volatile memory not initialized, or contents invalid. The remedy is to initialize the instrument, with the *supervisor* mode selected.
72. NOT SUPERVISOR	Rear panel keyswitch incorrectly set. Some learnt program operations can be performed only when the keyswitch is set to SUPERVISOR.
73. CAL. DATA CLEARED	Calibration data cleared.
74. I/P UNREASONABLE	Input to channel being calibrated is outside calibration range.
75. CAL. DATA CORRUPT>	One copy of calibration data is corrupted.
76. RECALIBRATE	Both copies of calibration data are corrupted. Instrument should be recalibrated as described in 1255/1260 Maintenance Manual.
77. ILL RANGE COMB.	Autorange is not applicable. Attempt made to calibrate with autorange selected. Or wrong combination of range commanded.

Axion Exhibit 1024
Axion v. Agilent

78. ILL FREQUENCY	Illegal frequency. Calibration frequency incorrectly set.
79. ILL CAL. SOURCE	Illegal calibration source.

9.2.9 GROUP 8: MEASUREMENT VALIDITY

MESSAGE	*EXPLANATION*
81. INPUT OVERLOAD	Overload on displayed channel(s).
82. AUTO INT. FAILED	Auto-Integration terminated before valid result obtained.
83. O/L + A. INT FAIL	Combination of Errors 81 and 82.
84. MONITOR FAILED	Failure to reach the target value at the monitor input, within the defined error %.
85. O/L + MON. FAIL	Combination of Errors 81 and 84.
86. MON. + A. INT FAIL	Combination of Errors 82 and 84.
87. OL, MON. + A/I FAIL	Combination of Errors 81, 82 and 84.
88. AUTO IMPED ERROR	When display CIRCUIT is set to [auto] the analyzer MODE must be set to [auto impedance].
89. G. DEL NOT SET UP	*Group display* not set.

9.2.10 GROUP 9: STORE/RECALL

MESSAGE	*EXPLANATION*
90. NO SUCH SET-UP	Attempt made to recall or clear an empty set-up store; or a checksum error has been detected on recalling a stored set-up.
91. SET-UP STORED	Control set-up stored.
92. SET-UP RECALLED	Control set-up recalled.
93. SET-UP CLEARED	Control set-up cleared.
94. SET-UP EXISTS	Set-up store in use. Before the store can be re-used it must be cleared.
95. RESULT STORED	Present result stored.
98. FUNCTION EXISTS	Attempt made to write a function under a number which is already in use. A used function must be cleared before a new function can be written under the same number.
99. NO SUCH FUNCTION	Attempt made to scale a measurement result by a non-existent function.

Axion Exhibit 1024
Axion v. Agilent

10
Measurement Scaling and Limit Checking

Section		*Page*
10.1	**Scaling Facilities**	**10.3**
10.2	**Normalizing Sweep Measurements**	**10.3**
10.3	**Scaling a Measurement**	**10.5**
10.3.1	Checking the Constants Store	10.5
10.3.2	Entering a Scaling Constant	10.6
10.3.3	Checking the Function Store	10.8
10.3.3.1	Accessing the Function Status Page	10.8
10.3.3.2	Accessing the Program/Function (Memory) status page	10.9
10.3.4	Clearing a Scaling Function	10.10
10.3.5	Entering a Scaling Function	10.11
10.3.6	Scaling Function Examples	10.12
10.3.6.1	Assigning Fixed Values	10.12
10.3.6.2	Entering the Function	10.14
10.3.7	Applying a Scaling Function	10.19
10.4	**The Limits Facility**	**10.21**
10.4.1	Setting the Limits	10.21

Axion Exhibit 1024
Axion v. Agilent

Axion Exhibit 1024
Axion v. Agilent

10.1 SCALING FACILITIES

Measurement results may be scaled in two ways:

a) sweep measurements may be *normalised*, and

b) individual results may have a scaling function applied to them.

These two facilities may be used independently. When they are both used, normalisation occurs before function.

10.2 NORMALIZING SWEEP MEASUREMENTS

The normalize facility computes the ratio of two sets of values, *normalize* values and the values resulting from a subsequent measurement sweep. Two useful applications are:

- Separating measurement results from background data
- Measuring the effect of a modification on the item under test. Three simple steps - normalize, modify, measure - give measurement results that are related to the *difference* in the item under test, after modification.

To normalize a sweep, set up the initial test conditions, set the sweep parameters, ensure that DATA OUTPUT, FILE is set to [all] and then

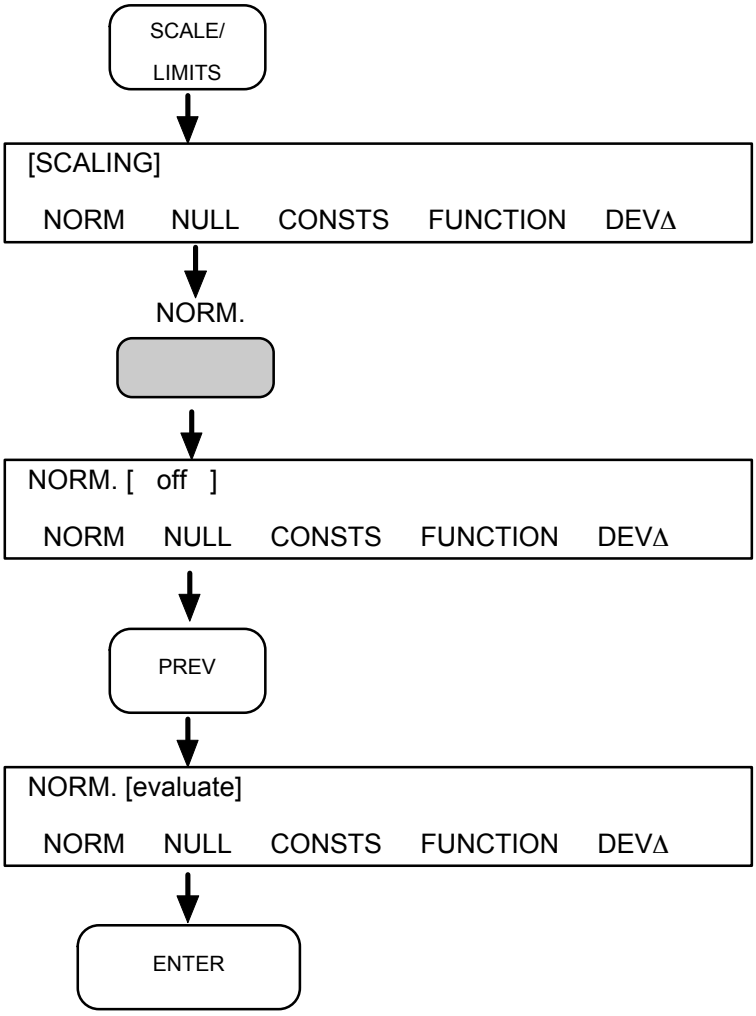

Press the SCALE/LIMITS hard key....

... to display the SCALING page.

Press the NORM. soft key....

... to display the present *normalize* setting The default setting is [off].

With [off] displayed, press the PREV kev once....

... to select [evaluate]....

... and enter it.

Axion Exhibit 1024
Axion v. Agilent

```
12.500000 kHz    -5.036dB        -38.15dg
[TIME   00:15:32]              40.FILE CLEARED
```

An evaluate sweep then starts automatically and messages are displayed to show the sweeps progress. First the history file is cleared...

```
10.000000 kHz    -15.036dB        -21.18dg
[TIME   00:15:33]                NORMALIZING
```

...then evaluation starts...

```
100.00000 kHz    -52.036dB        -47.17dg
[TIME   00:15:47]              23.NORMALIZED
```

...and continues to the end of the sweep. Normalize [on] is selected automatically, and the results from any sweeps now performed are divided by the normalize values.

RECYCLE

After setting up the secondary test conditions, press RECYCLE to start the measurement sweep.

```
100.00000 kHz    -5.036dB        -19.15dg   *
[TIME   00:16:21]              20. SWEEP COMPLETE
```

An asterisk is displayed against each normalized result to show that it is not the original measured value.

While the sweep parameters remain at their present settings the normalize facility may be used as required, by entering NORM. [on] or [off].

Changing the sweep parameters after [evaluate] has been entered invalidates the present normalize values, “29. RENORMALIZE”, until [evaluate] is entered again.

Axion Exhibit 1024
Axion v. Agilent

10.3 SCALING A MEASUREMENT

Individual measurements are scaled by entering a user-defined scaling *function* and then selecting “FUNCTION” as the display source. A scaling function may include user-defined scaling *constants*.

Eighteen scaling *functions* may be stored, nine in battery-maintained memory and nine in non-volatile memory. Nine scaling *constants* may be stored, in battery-maintained memory.

10.3.1 CHECKING THE CONSTANTS STORE

Before trying to enter a constant check that a slot is available for it.

If the instrument has been initialized since constants were last entered then the constants store will be completely clear and user-defined values may be entered under any number from 1 through 9, as described in Section 10.3.2.

If the instrument has not been initialized and you are uncertain of the constants stored, then the STATUS menu will show you. If space is not available, then you may overwrite the values stored under a constant slot already in use.

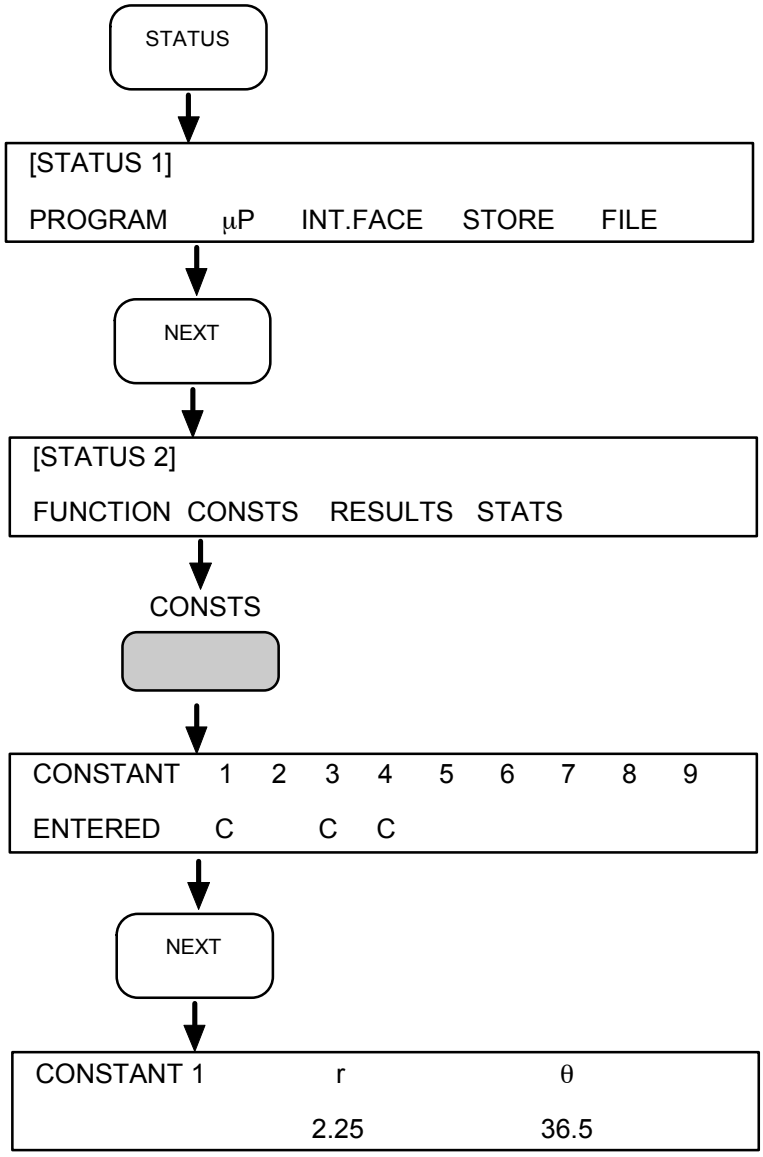

To access the *constants* status pages press the STATUS hard key....

... to display the first STATUS page.

Then press NEXT to select....

... the second STATUS page.

...and press CONSTS to see....

...first the constants stores in use...

....and then....

...the constants stored in number 1. Successive operations of the NEXT key will reveal the content of each constant store in turn.

Axion Exhibit 1024
Axion v. Agilent

10.3.2 ENTERING A SCALING CONSTANT

To enter a scaling constant, the procedure is:

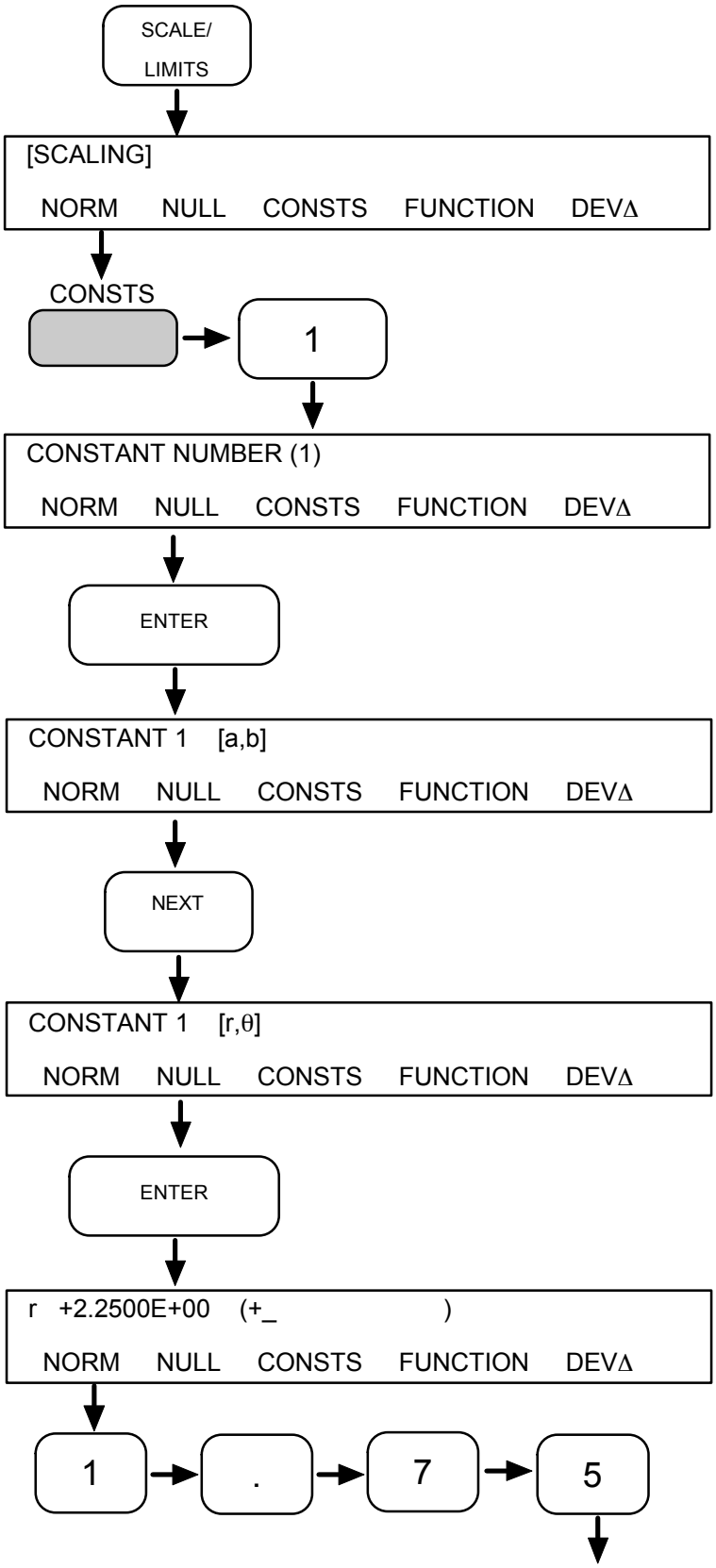

Press the SCALE/LIMITS hard key....

... to display the SCALING page.

Press the CONSTS soft key and assign the intended constant a number....

... e.g. 1

Enter the number...

...and the form of the intended constant is displayed. After *initialize* this is [a,b].

If the alternative form is wanted, select the next setting...

... which is [r,θ]...

... and enter it.

The present value of the r coordinate is now displayed and round brackets invite the entry of a new value.

If required, key in a new value, e.g. 1.75...

Axion Exhibit 1024
Axion v. Agilent

```
r   +2.2500E+00    (+1.75_              )
  NORM    NULL    CONSTS    FUNCTION    DEVΔ
```

↓

ENTER

... and enter it.

↓

```
θ  +36.500E+00    (+_                  )
  NORM    NULL    CONSTS    FUNCTION    DEVΔ
```

Next, the present value of the θ coordinate is displayed, again with an invitation to enter a new value.

↓

2 → 8 → . → 7

If required, key in a new value, e.g. 1.75...

↓

```
θ  +36.500E+00    (+28.7_              )
  NORM    NULL    CONSTS    FUNCTION    DEVΔ
```

↓

ENTER

... and enter it.

↓

```
[SCALING]
  NORM    NULL    CONSTS    FUNCTION    DEVΔ
```

“SCALING” is displayed again to show that constant entry is complete.

Axion Exhibit 1024
Axion v. Agilent

10.3.3 CHECKING THE FUNCTION STORE

Before trying to enter a function check that

- a function slot is vacant (FUNCTION status) and
- sufficient memory space is available to hold the function (PROGRAM status).

If the instrument has been initialized since the functions were last entered then user-defined scaling functions may be entered under any number from 1 through 9, as described in Section 10.3.5.

If the instrument has not been initialized and you are uncertain of the contents of the function store, then the FUNCTION pages of the STATUS menu will show you. When all function slots are in use, you may clear unwanted functions selectively, as described in Section 10.3.4.

Stored functions and learnt programs use the same area of memory and the availability of this, for battery-sustained and non-volatile memory, appears under PROGRAM on the first STATUS page. A function uses two memory blocks.

10.3.3.1 Accessing the Function Status Page

To access the FUNCTION status pages:

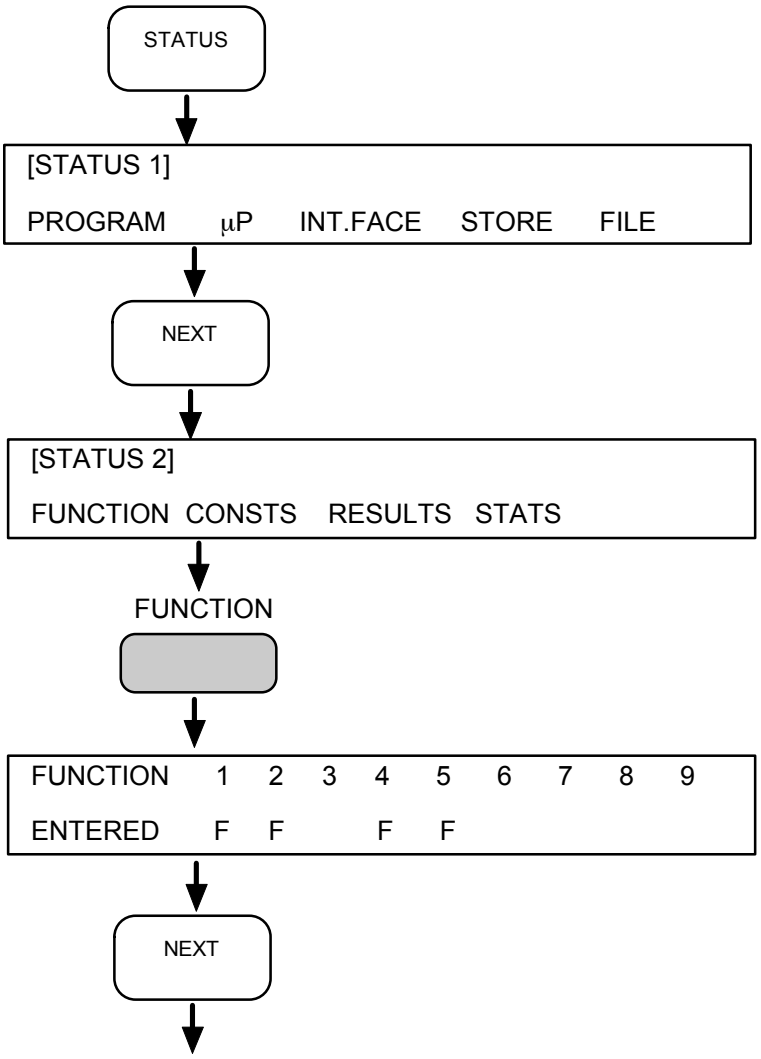

Press the STATUS hard key....

... to display the first STATUS page.

Then press NEXT to select....

... the second STATUS page.

...and press FUNCTION to see....

...first the function stores in use in battery-maintained memory...

...then...

Axion Exhibit 1024
Axion v. Agilent

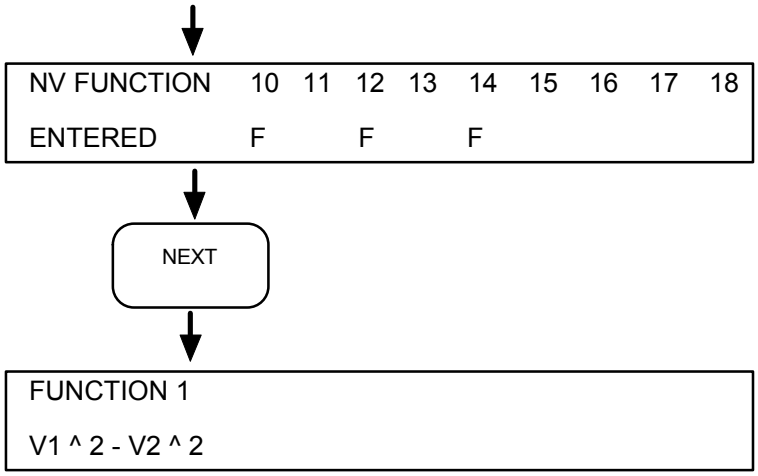

...the function stores in use in non-volatile memory...

...and then, with each successive press of the NEXT key...

...the functions stored.

10.3.3.2 Accessing the Program/Function (Memory) Status Page

To access the program/function memory status page:

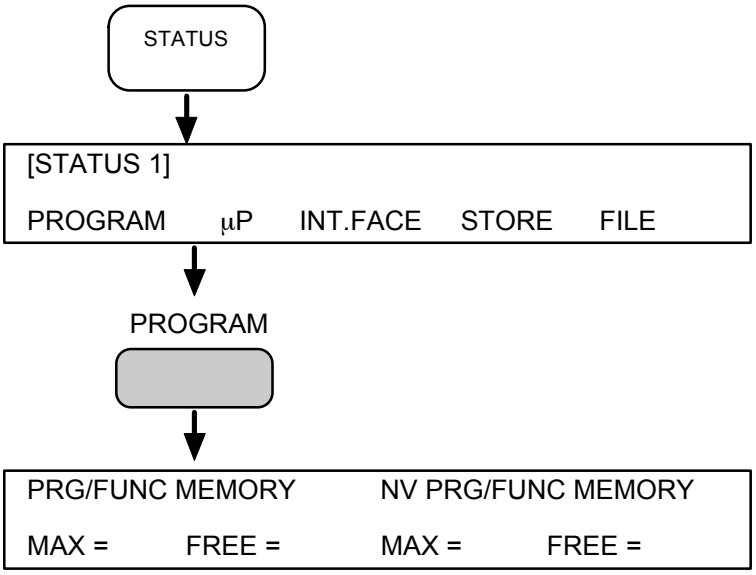

Press the STATUS hard key....

... to display the first STATUS page.

Then press the PROGRAM soft key....

...to select the first page of program status information. This shows the memory space available, both in battery-maintained and non-volatile memory.

Axion Exhibit 1024
Axion v. Agilent

10.3.4 CLEARING A SCALING FUNCTION

If none of the functions presently stored in the instrument are wanted then the whole program/function memory may be cleared by initializing the instrument. Remember, however, that this will also erase the history file and other stored data and set the control settings to their default states.

The battery-maintained program memory (program/functions 1 through 9) is always cleared on initialization, but the non-volatile memory (program/functions 10 through 18) is cleared only if the instrument is operating in the supervisor mode, i.e. when the PROGRAM keyswitch on the instrument rear panel is set to SUPERVISOR and INITIALIZE has been commanded.

If you wish to keep the contents of the non-volatile memory, always set the PROGRAM keyswitch to NORMAL before initializing the instrument.

If some functions are wanted, or if you do not wish to initialize the instrument, then unwanted functions may be cleared selectively. The procedure is:

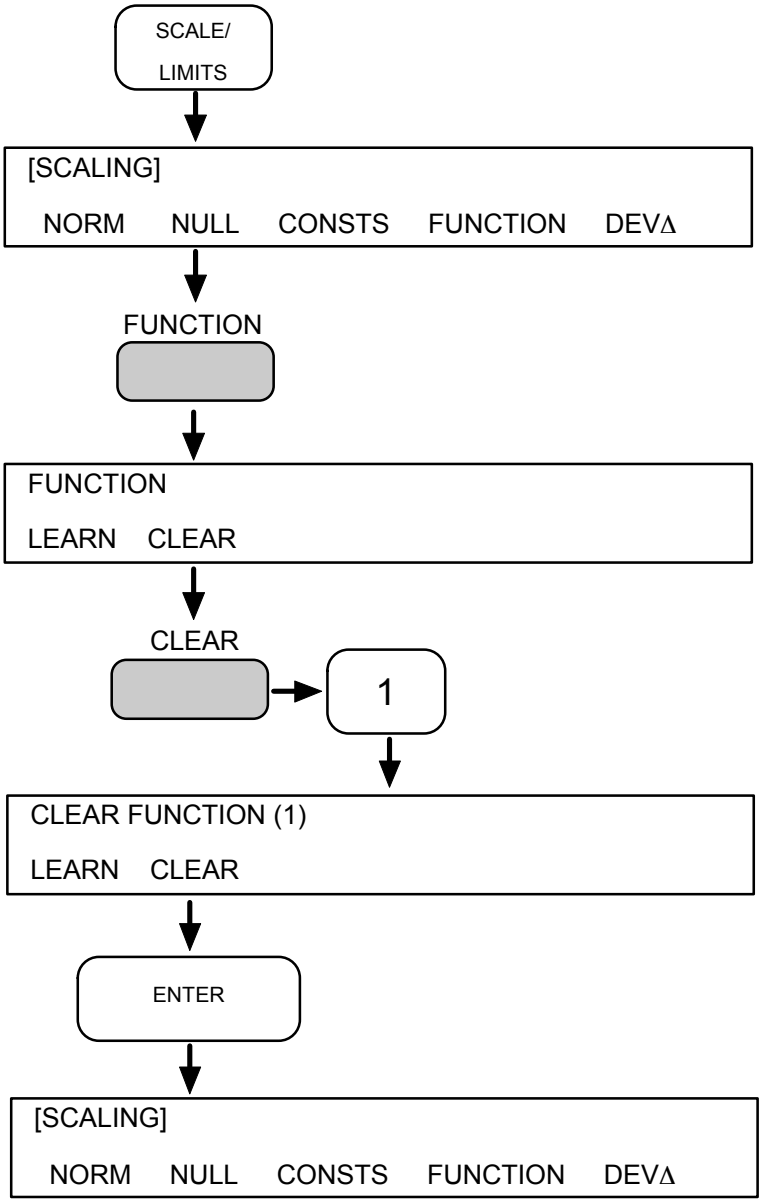

Press the SCALE/LIMITS hard key....

... to select the first page of the scaling menu.

Press the FUNCTION soft key....

...and you have the option of learning or clearing a function.

If the number under which the function is to be stored is already in use then it must be cleared first. Press CLEAR and key in the function number.

Enter the clear request...

...and the display returns to the SCALING page.

Axion Exhibit 1024
Axion v. Agilent

10.3.5 ENTERING A SCALING FUNCTION

To enter a scaling function:

SCALE/ LIMITS

Press the SCALE/LIMITS hard key....

```
[SCALING]
 NORM    NULL    CONSTS    FUNCTION    DEVΔ
```

... to select the first page of the scaling menu.

FUNCTION

Press the FUNCTION soft key....

```
FUNCTION
LEARN   CLEAR
```

LEARN → 1

...then LEARN and the number of the function to be entered.

```
LEARN FUNCTION (1)
LEARN   CLEAR
```

ENTER

Enter the learn request...

```
FUNCTION 1 =
[  V1        V2        Cn        Sn        ]
```

...and the function entry may begin.

The square brackets indicate another page of operators and variables.

A scaling function may now be created, from the operators and variables displayed. (An example is given in the next section.) To ensure the correct syntax, only the valid choices are shown: this choice is updated as each item is keyed in. The square brackets indicate that further operators and variables are available (selected with NEXT or PREV).

ENTER

Having keyed in the function, press ENTER...

```
[SCALING]
 NORM    NULL    CONSTS    FUNCTION    DEVΔ
```

...and the display returns to the SCALING page to show that entry is complete.

Axion Exhibit 1024
Axion v. Agilent

10.3.6 SCALING FUNCTION EXAMPLE

A practical example shows how scaling functions work. In this particular case the open-loop gain *(A)* of an amplifier is computed from the closed-loop gain *(A')*, using the function

$$A = \frac{A'}{1 - RA'}$$

where

$$A' = \frac{V_o}{V_i} = \frac{V_2}{V_1}$$

and

$$R = \frac{R_{input}}{R_{feedback}}$$

Note that all functions use vector arithmetic, i.e. V1 = a + jb

10.3.6.1 Assigning Fixed Values

Fixed values are assigned to a function from stored results (Sn) and user-defined constants (Cn). In the present example, therefore, the values "1" and *R* are stored as constants. This is done before entering the function itself.

The procedure is:

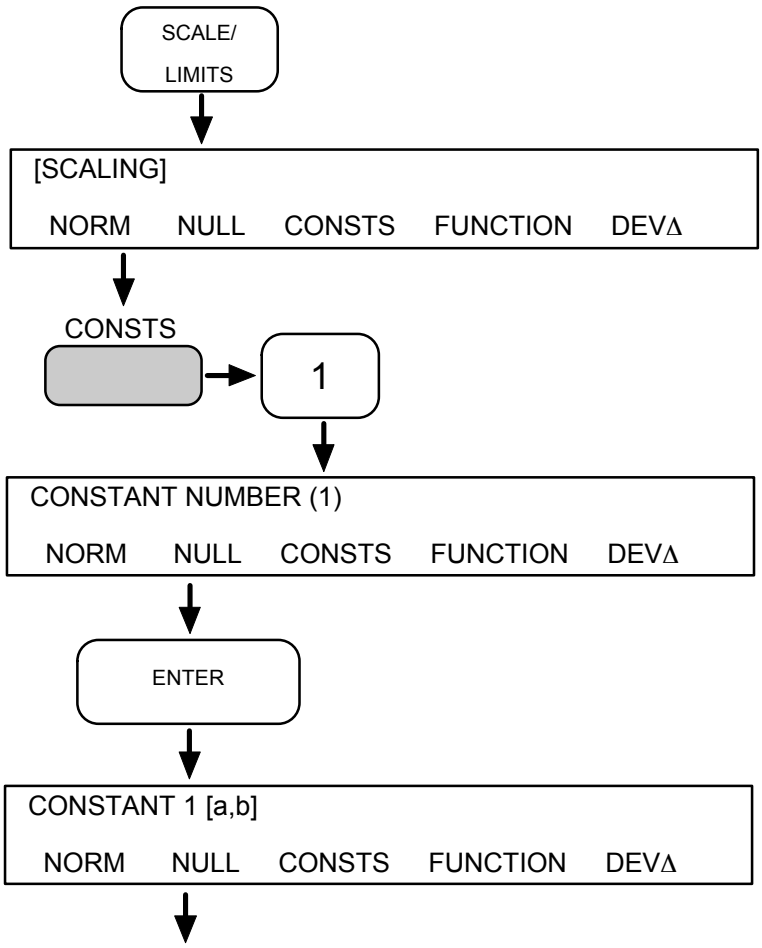

Press the SCALE/LIMITS hard key....

... to display the SCALING page.

Press the CONSTS soft key and assign the intended constant number....

...i.e. 1.

Enter the number...

...and the form of the intended constant is displayed. (After initialise this is [a,b].)

Axion Exhibit 1024
Axion v. Agilent

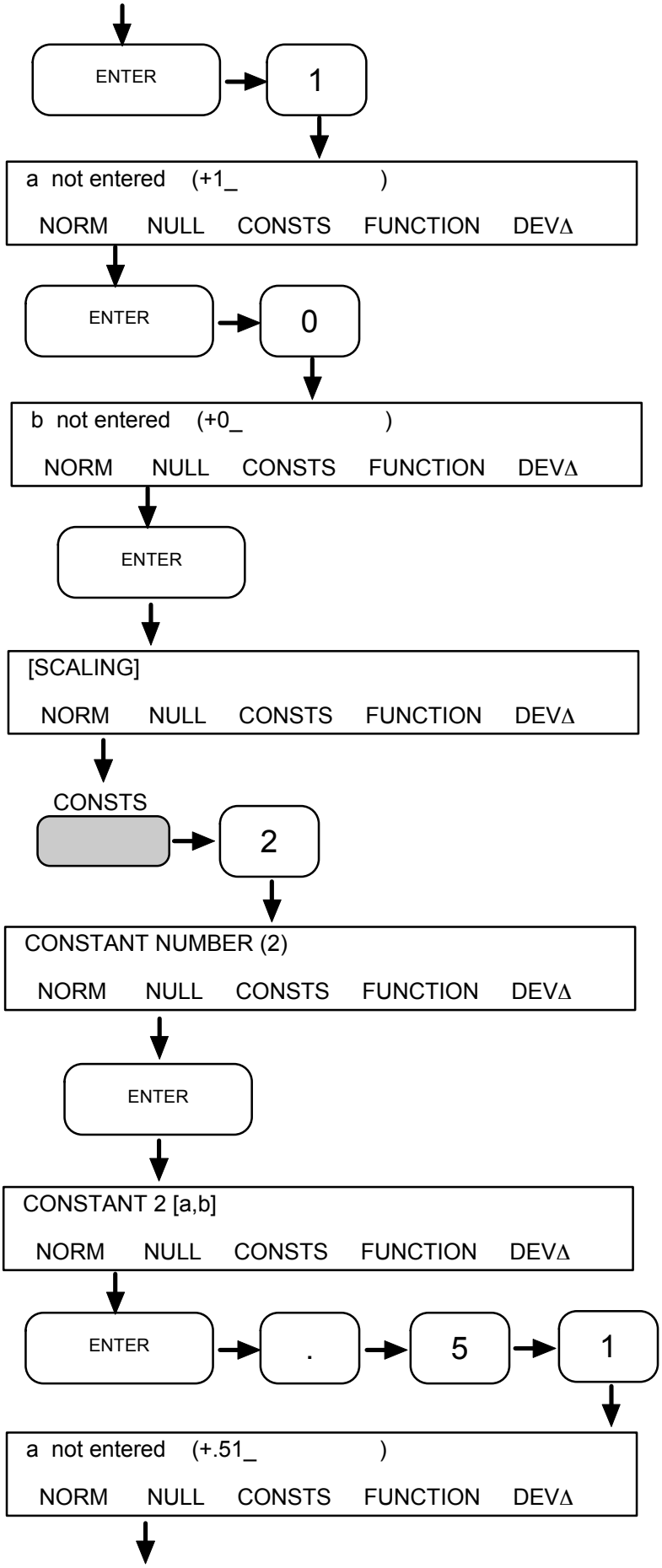

Enter the [a,b] setting, and key in a real value *(a)* of “1”...

Enter the a value, and key in a imaginary value *(b)* of “0”...

Enter the b value...

...and “SCALING” shows that entry is complete.

Now repeat the procedure and...

...Enter *R* as Constant 2...

...having, for example, Cartesian coordinates with a real value of 0.51...

Axion Exhibit 1024
Axion v. Agilent

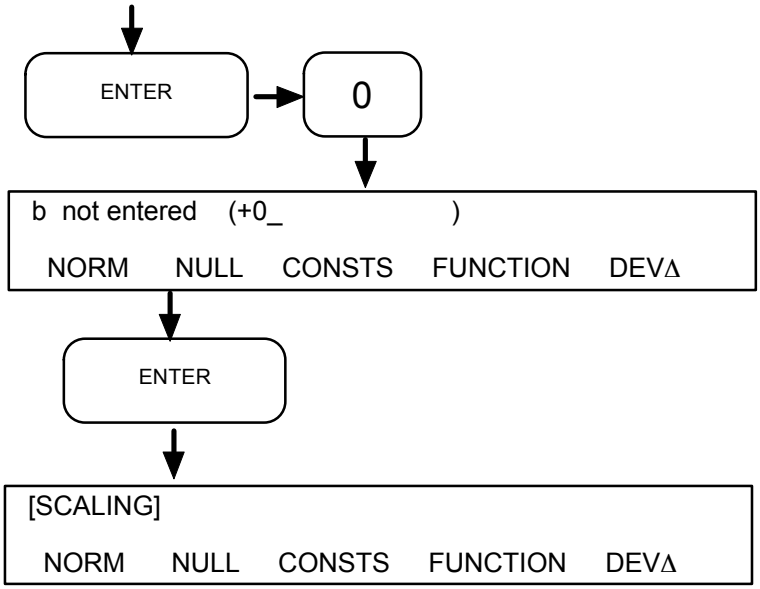

...and an imaginary value of zero.

The fixed values “1” and *R* are now held as constants.

10.3.6.2 Entering the Function

A function to compute the value, *A*, of the open-loop gain is now entered.

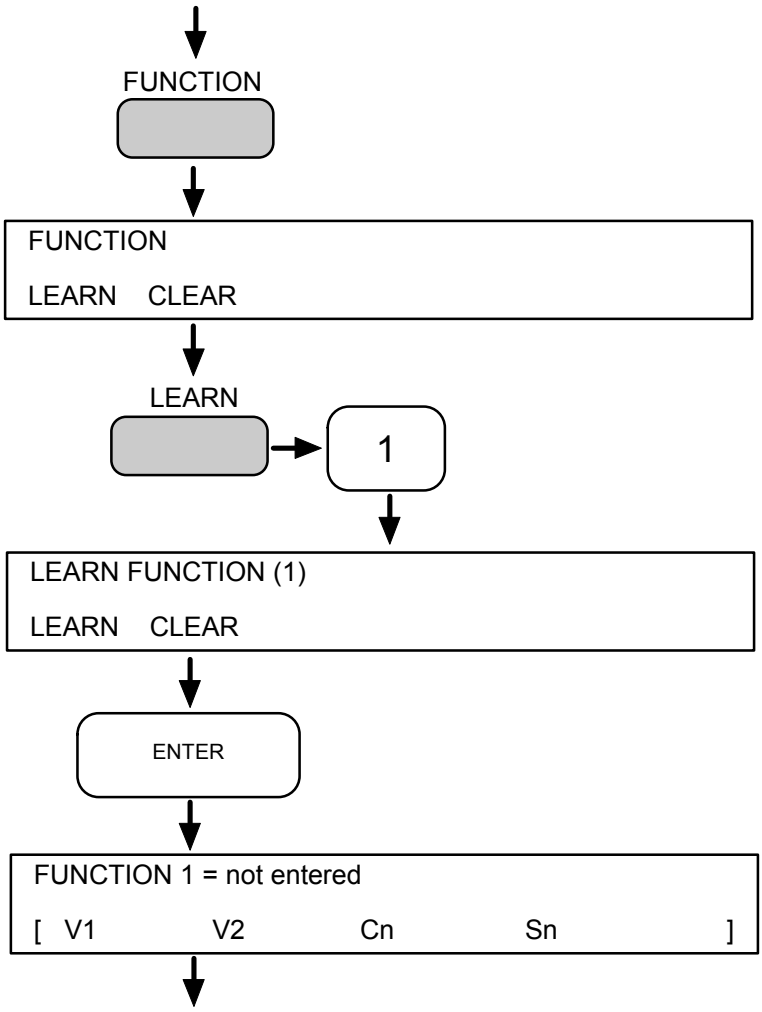

Press the FUNCTION soft key....

...then LEARN and the number of the function to be entered.

Enter the learn request...

...and a choice of items is displayed. Square brackets show that other choices are available.

Axion Exhibit 1024
Axion v. Agilent

V2

Key in the first item, which, in the present example, is V2....

```
FUNCTION 1 = V2
[   *          /          ↑                    ]
```

This item appears after “FUNCTION 1 = “, and the next selection of items appears.

/

As the example shows it is a simple matter to key in the rest of the function. All that is needed is a little thought as to the action of the operators. These act from left to right, at the following priorities:

```
FUNCTION 1 = V2/
[  V1          V2          Cn          Sn          ]
```

1st priority: powers and negative powers, represented by “↑“ and “-↑“

2nd priority: division and multiplication represented by “/” and “*”.

3rd priority: addition and subtraction, represented by “+” and “-”.

V1

Brackets tie several terms together, so that a common operator can be applied. An example of this is given on the next page.

```
FUNCTION 1 = V2/V1
[   *          /          ↑                    ]
```

/

```
FUNCTION 1 = V2/V1/
[  V1          V2          Cn          Sn          ]
```

The function keyed in so far is:

$$F_1 = \frac{\frac{V_2}{V_1}}{}$$

NEXT

An open bracket is needed now, so press NEXT to display the alternative items.

Axion Exhibit 1024
Axion v. Agilent

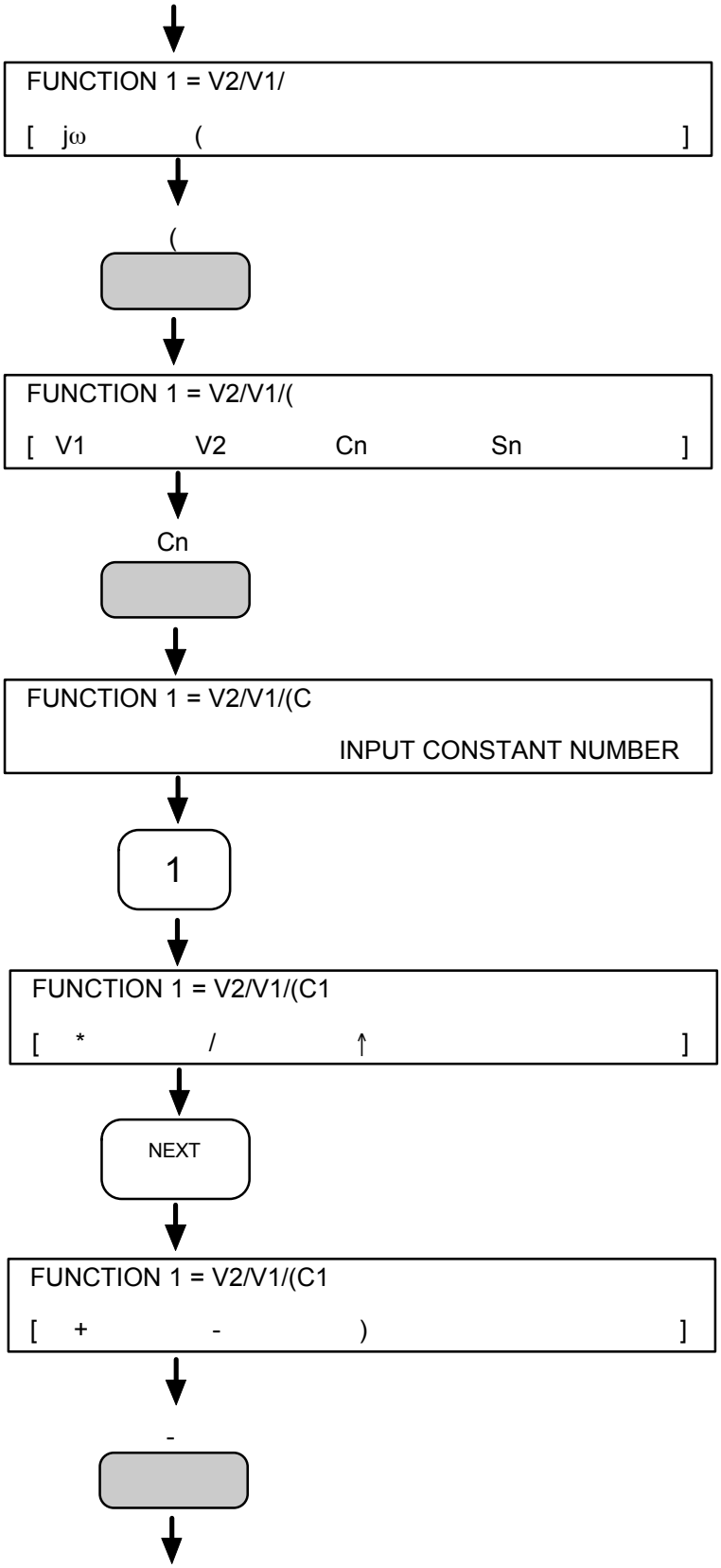

The function keyed in so far is :

$$F_1 = \frac{\frac{V_2}{V_1}}{C_1 -}$$

Axion Exhibit 1024
Axion v. Agilent

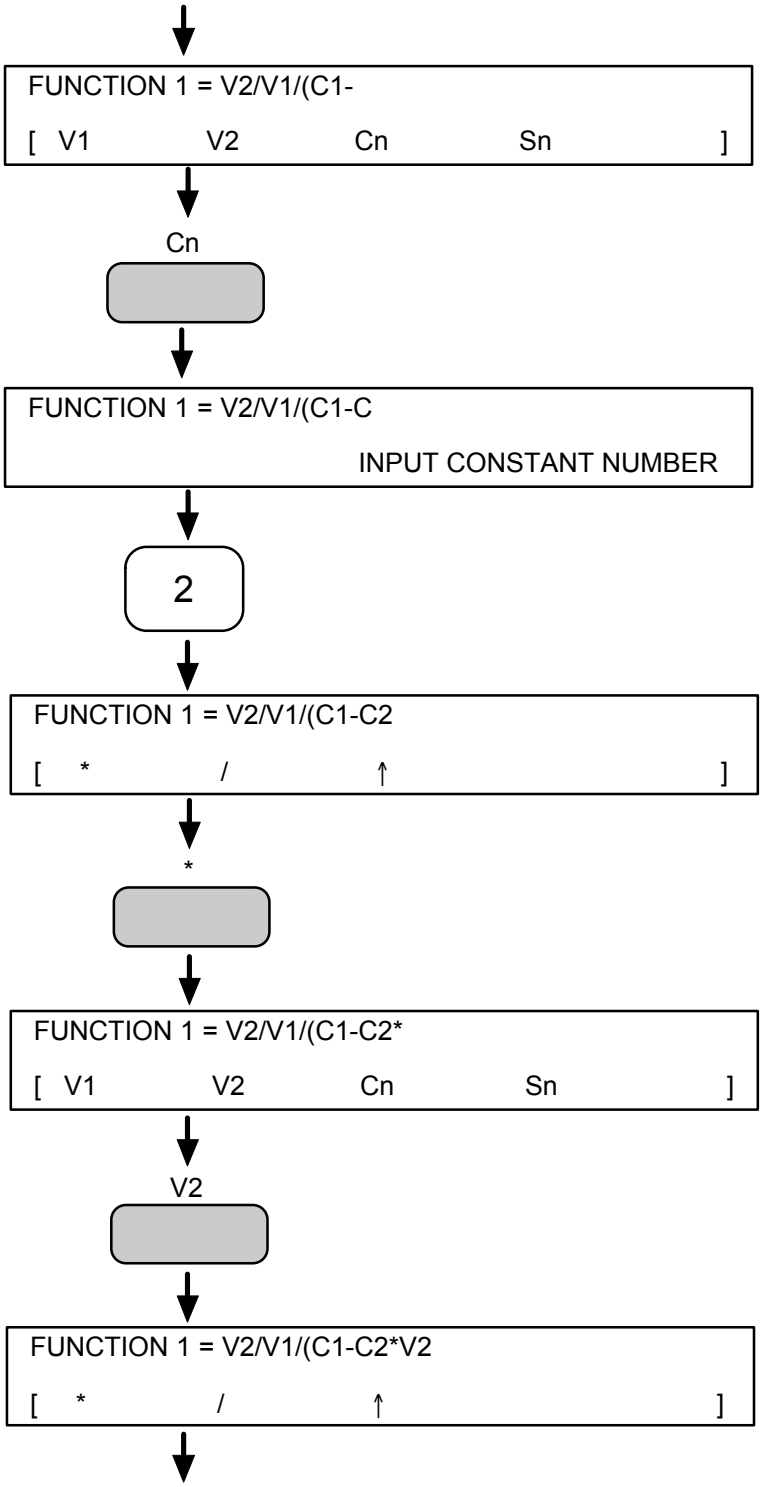

The function keyed in so far is :

$$F_1 = \frac{\frac{V_2}{V_1}}{C_1 - C_2 V_2}$$

Axion Exhibit 1024
Axion v. Agilent

/

```
FUNCTION 1 = V2/V1/(C1-C2*V2/
[  V1        V2        Cn        Sn        ]
```

V1

```
FUNCTION 1 = V2/V1/(C1-C2*V2/V1
[   *        /        ↑                    ]
```

NEXT

```
FUNCTION 1 = V2/V1/(C1-C2*V2/V1
[   +        -        )                    ]
```

)

```
FUNCTION 1 = V2/V1/(C1-C2*V2/V1)
[   *        /        ↑                    ]
```

ENTER

Having keyed in the function, press ENTER....

```
[SCALING]
 NORM    NULL    CONSTS    FUNCTION    DEVΔ
```

...and the display returns to the "SCALING" page to show that entry is complete.

Function 1 is now ready to apply, as:

$$F_1 = \frac{\frac{V_2}{V_1}}{C_1 - C_2 \frac{V_2}{V_1}}$$

Axion Exhibit 1024
Axion v. Agilent

10.3.7 APPLYING A SCALING FUNCTION

Once a scaling function has been entered (as shown in the previous section) it is applied by selecting “FUNCTION” as the display source. The procedure is:

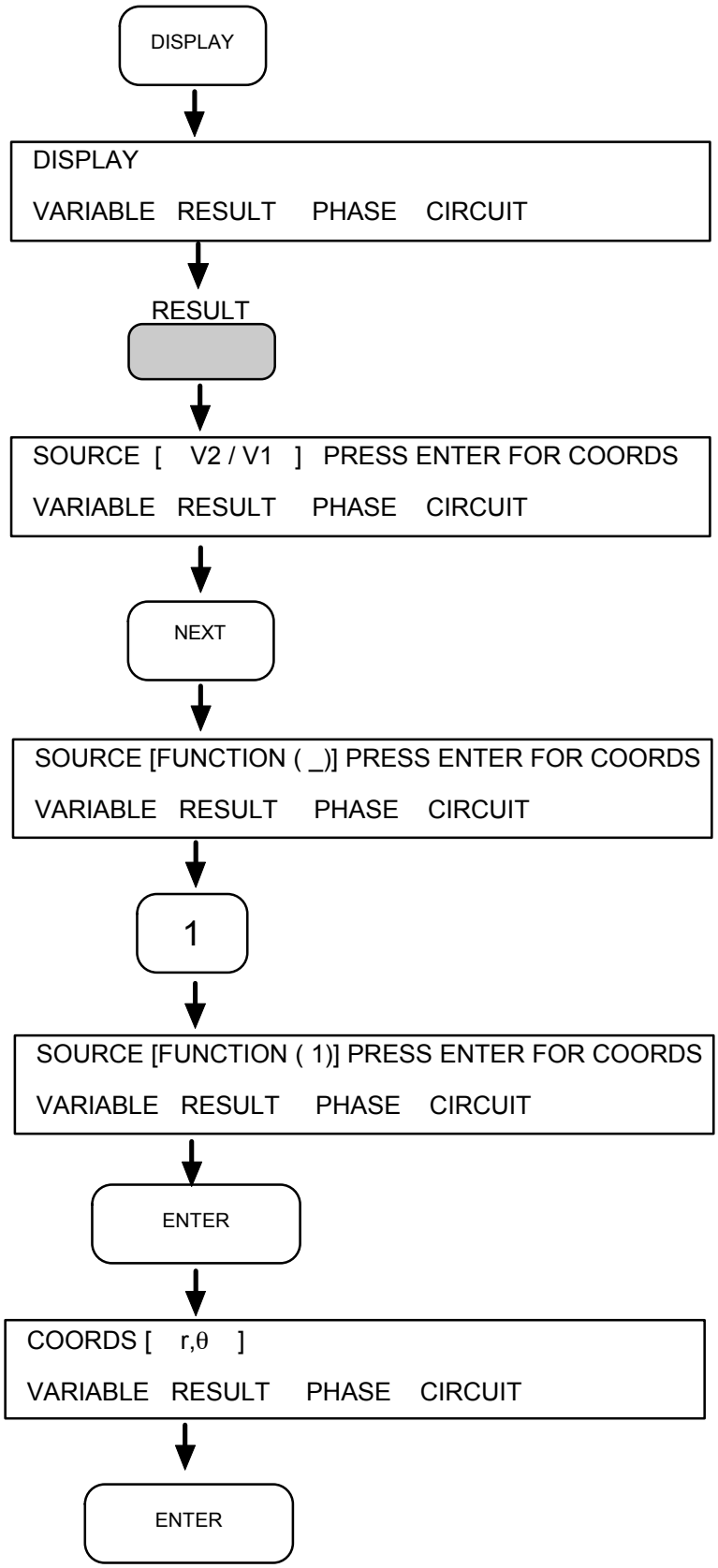

Press the DISPLAY hard key ...

... to select the display menu.

Then press RESULT...

... to display the present source of the displayed result. The default setting is [V2/V1]...

... Now select FUNCTION, which, in the present example, is the next setting.

Key in the function identity, e.g. 1...

and enter it...

... to display the present coordinates setting

Let’s assume that this is the setting you want. Enter it...

Axion Exhibit 1024
Axion v. Agilent

```
DISPLAY
VARIABLE   RESULT    PHASE    CIRCUIT
```

...and “DISPLAY” is displayed again to show that entry is complete.

ENTER

Press ENTER again...

```
200.00000Hz        10.274k        -15.95 dg   *
[TIME   14:36:27]
```

...to display the present measurement result in its scaled form. All other measurements displayed will be scaled in the same way, until a different display source is entered.

Axion Exhibit 1024
Axion v. Agilent

10.4 THE LIMITS FACILITY

Measurement results may be checked against a user-defined limits, which define pass and fail zones. Fig 4.1 shows the set-up:

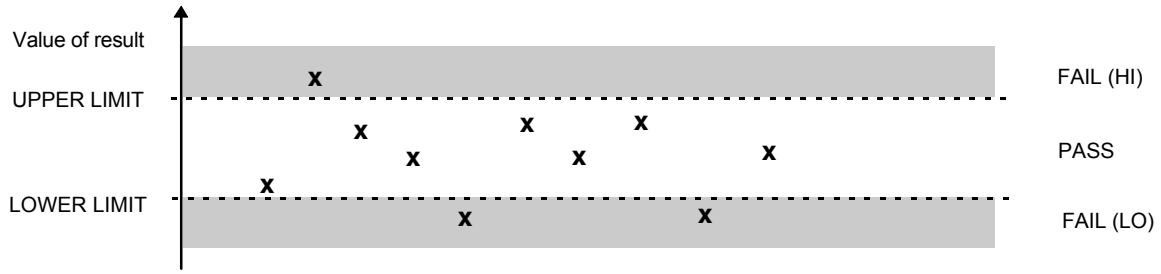

Fig 4.1 Pass and fail zones, as defined by the upper and lower limits.

An upper limit defines the ceiling, and a lower limit defines the floor, of the measurement pass zone. The pass condition is "*lower limit ≤ result ≤ upper limit*", whilst the fail condition is "*result < lower limit*" or "*result > upper limit*". The example in Fig 4.1 shows ten measurement results, each represented by an "x": seven results have passed the check and three have failed.

In accordance with the limits check, "Hi" or "Lo" is displayed against failed results.

Once a limits item has been entered, output data may be restricted to *pass* or *fail* results. The choice, for each output port, is made from the DATA OUTPUT menu.

10.4.1 SETTING THE LIMITS

To enter the limits the procedure is:

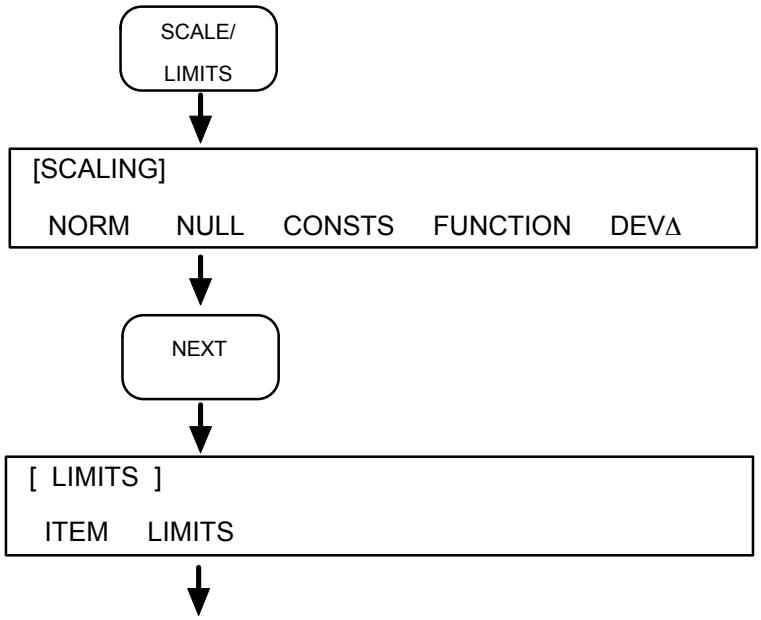

Press the SCALE/LIMITS hard key....

(which displays the SCALING menu)

... then select the next page...

which contains the LIMITS menu

Axion Exhibit 1024
Axion v. Agilent

ITEM

Then press ITEM soft key...

```
ITEM   [  off  ]

 ITEM     LIMITS
```

...to display the present status of the limit check. [off] indicates that a limits check is not applied.

NEXT

Select the item to be limits checked, which, in the present example, is the next setting...

```
ITEM   [  par 1  ]

 ITEM     LIMITS
```

...i.e. [par 1]. This setting and the alternative setting [par 2] relate to the measurement result displayed. (See Chapter 5, Section 4.)

ENTER

ENTER the selected item...

```
[  LIMITS  ]

 ITEM     LIMITS
```

...and “LIMITS” is displayed again to show that the item is entered.

LIMITS

Then press the LIMITS soft key...

```
LOWER LIMIT +0.0000 (+_                )

 ITEM     LIMITS
```

...to display the present lower limit for the selected item. Round brackets invite the entry of a new lower limit.

. → 5

Key in the required lower limit value, e.g. 0.5. (There is no need to key in the leading zero, it is assumed. A leading zero is displayed when the value is next interrogated.)

```
LOWER LIMIT +0.0000 (+.5_              )

 ITEM     LIMITS
```

ENTER

ENTER the lower limit value...

Axion Exhibit 1024
Axion v. Agilent

```
UPPER LIMIT +0.0000 (+_              )
 ITEM    LIMITS
```

Key in the upper limit value...

1 → . → 2 → 5

```
LOWER LIMIT +0.0000 (+1.25_          )
 ITEM    LIMITS
```

ENTER

...and enter it.

```
[  LIMITS  ]
 ITEM    LIMITS
```

"LIMITS" is displayed again to show that entry is complete.

ENTER

Press ENTER to display the last result...

```
200.00000Hz        10.274k          -15.95 dg   *  HI
[TIME   14:36:27]
```

... which is seen to have failed the limit check, as indicated by "HI".

Axion Exhibit 1024
Axion v. Agilent

11
Learnt Programs

Section	*Page*
11.1 Learnt Program Facilities	**11.3**
11.1.1 Program Storage	11.3
11.1.2 Program Keyswitch	11.3
11.2 Checking the Program Memory Space	**11.4**
11.3 Clearing a Learnt Program	**11.5**
11.4 Creating a Learnt Program	**11.6**
11.4.1 Entering the Learn Mode	11.6
11.4.2 Learnt Program Example	11.7
11.5 Executing a Learnt Program	**11.11**
11.6 Editing a Learnt Program	**11.12**
11.6.1 Entering the Edit Mode	11.12
11.6.2 Listing of Example Program	11.13
11.6.3 Using the Edit Functions	11.14
11.7 Copying a Learnt program	**11.16**
11.7.1 Copy Procedure	11.16

Axion Exhibit 1024
Axion v. Agilent

Axion Exhibit 1024
Axion v. Agilent

11.1 LEARNT PROGRAM FACILITIES

The instrument is able to store a series of commands, which may be actioned later as a *learnt* program. A learnt program is useful where a test sequence is used repeatedly, as, for example, in production testing. Up to eighteen programs may be stored.

Each learnt program instruction is equivalent to a single menu entry.

A *set-up recall* instruction allows a complete instrument set-up to be recalled. This reduces the number of instructions necessary when altering groups of settings throughout the test. Single acting instructions need to be used only for sequential operations.

The learnt program facilities are presented under three hard keys, LEARN PROG, EXECUTE PROGRAM, and STATUS. The LEARN PROG functions are:

Learn Sets the instrument into the learn program mode in which it interprets each command as a learn program instruction. Programs are learnt under program numbers 1 through 9.

Edit Allows a learnt program to be modified. Only programs 1 to 9 may be edited. To edit a program in non-volatile memory (programs 10 to 18) copy the program to a program number between 1 and 9, edit it, clear the original program and copy it back.

Clear Clears an unwanted learnt program from memory.

Copy Copies a complete learnt program under another program number. This facilities is used for transferring a learnt program to non-volatile memory. It may also be used, with EDIT, to derive one program from another.

EXECUTE PROGRAM allows a selected program to be executed.

The STATUS 1, PROGRAM pages show the memory space available for program storage.

11.1.1 PROGRAM STORAGE

Programs 1 through 9 are held in the battery-maintained memory. There is also room for nine programs in non-volatile memory, under program numbers 10 through 18. Use COPY to transfer important programs to locations 10 through 18: the original programs may then be cleared, so that other programs may be learnt.

11.1.2 PROGRAM KEYSWITCH

A PROGRAM keyswitch on the instrument rear panel may be set to protect the learnt programs in non-volatile memory. Two switch settings are used:

- The SUPERVISOR setting allows learnt programs to be stored in, or recalled from, any location from 1 through 18. All programs may be cleared.

  CAUTION: Do not switch the instrument on or off when the keyswitch is in the “Supervisor” mode.

- The NORMAL setting allows learnt programs to be recalled from any location, but stored only in locations 1 through 9. Only programs 1 through 9 may be cleared.

Axion Exhibit 1024
Axion v. Agilent

11.2 CHECKING THE PROGRAM MEMORY SPACE

Before trying to create a learnt program check that

- a vacant program slot is available and
- sufficient memory space is available to hold all the instructions.

If the instrument has been initialized since programs were last entered then the learnt program memory will be completely clear and a program may be created under any number from 1 through 9, as described in Section 11.4.

If the instrument has not been initialized and you are uncertain about the contents of the program memory, then use the STATUS menu to find out what space is available:

STATUS

Press the STATUS hard key....

[STATUS 1]

PROGRAM μP INT.FACE STORE FILE

... to display the first STATUS 1 page.

PROGRAM

Then press the PROGRAM soft key....

PRG/FUNC MEMORY		NV PRG/FUNC MEMORY	
MAX =	FREE =	MAX =	FREE =

...to select the first page of learnt program status information. This shows the memory space available, both in battery-maintained and non-volatile memory.

NEXT

Press the NEXT key once....

PROGRAM	1	2	3	4	5	6	7	8	9
LEARNT	P	P	P			P			

...to see which program slots are vacant in battery-maintained memory. “P” indicates that a program is stored.

NEXT

Then, if necessary, press the NEXT key again....

NV PROGRAM	10	11	12	13	14	15	16	17	18
LEARNT			P	P		P			

...to see which program slots are vacant in non-volatile memory.

If there is insufficient memory space for the intended program then the entire memory, or selected parts of it, may be cleared as described in Section 11.3.

Axion Exhibit 1024
Axion v. Agilent

11.3 CLEARING A LEARNT PROGRAM

If none of the learnt programs presently stored in the instrument are wanted then the whole program memory may be cleared by initializing the instrument. Remember, however, that this will also erase the history file and other stored data and set the control settings to their default states. The battery-maintained program memory (programs/functions 1 through 9 and stored set-ups/results 1 through 9) is always cleared on initialization, but the non-volatile memory (programs/functions 10 through 18 and stored set-ups 10 through 16) is cleared only if the instrument is operating in the supervisor mode, i.e. when the PROGRAM keyswitch on the instrument rear panel is set to SUPERVISOR and INITIALIZE has been commanded.

If you wish to keep the contents of the non-volatile memory, always set the PROGRAM keyswitch to NORMAL before initializing the instrument.

If some learnt programs are wanted, or if you do not wish to initialize the instrument, then unwanted programs may be cleared selectively. The procedure is:

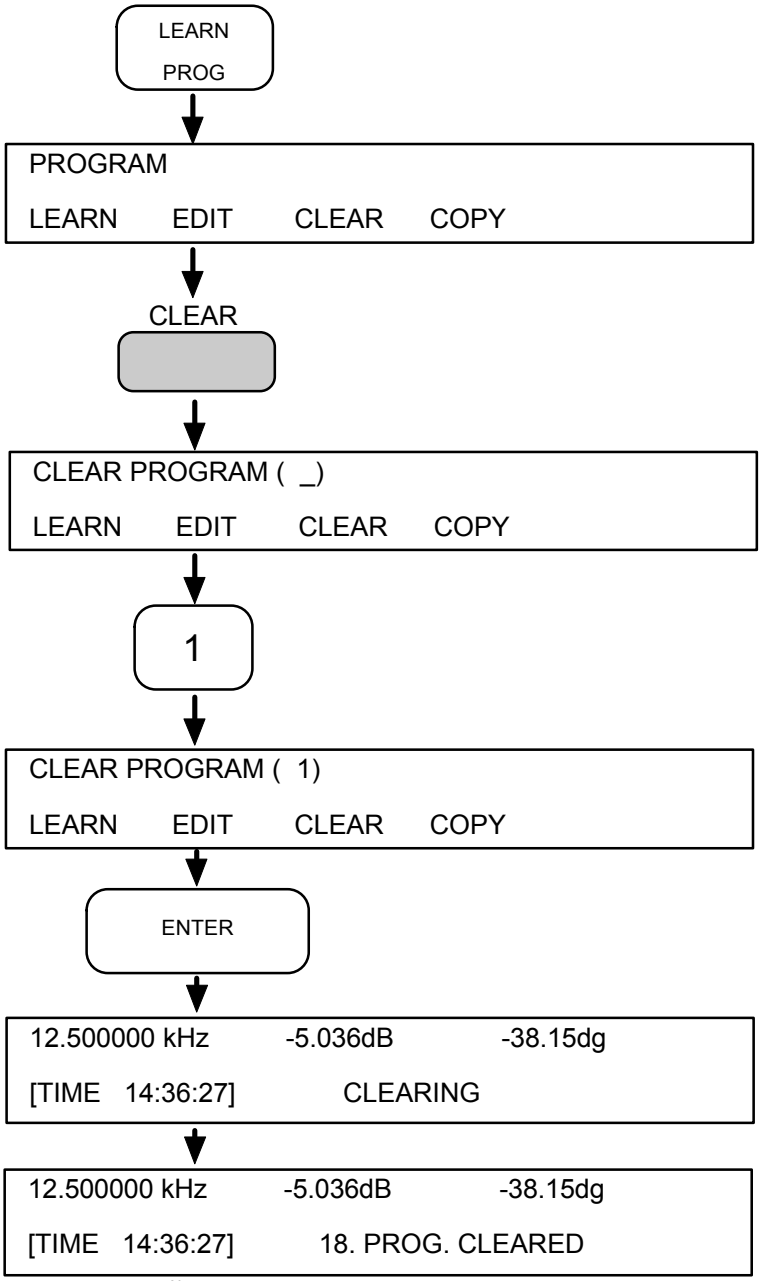

Press the LEARN PROG hard key....

... to select the learn program menu. The titles of the program facilities are shown above the soft keys.

Press the CLEAR soft key....

...and the display invites you to enter the number of a program to be deleted.

Key in the program number....

...e.g. 1...

... and enter it.

To show that something is happening, the message, “CLEARING” is displayed....

...followed, when clearing is complete, by the message, “18. PROG. CLEARED”

Axion Exhibit 1024
Axion v. Agilent

11.4 CREATING A LEARNT PROGRAM

To create a learnt program, simply set the instrument into the learn program mode and then enter commands in the order in which they are to be executed. Remember that a recall set-up instruction can set any number of control parameters in one go. This is useful in tests that require several parameters (e.g. the SWEEP settings) to be altered part of the way through.

11.4.1 ENTERING THE LEARN MODE

To enter the learn mode the procedure is:

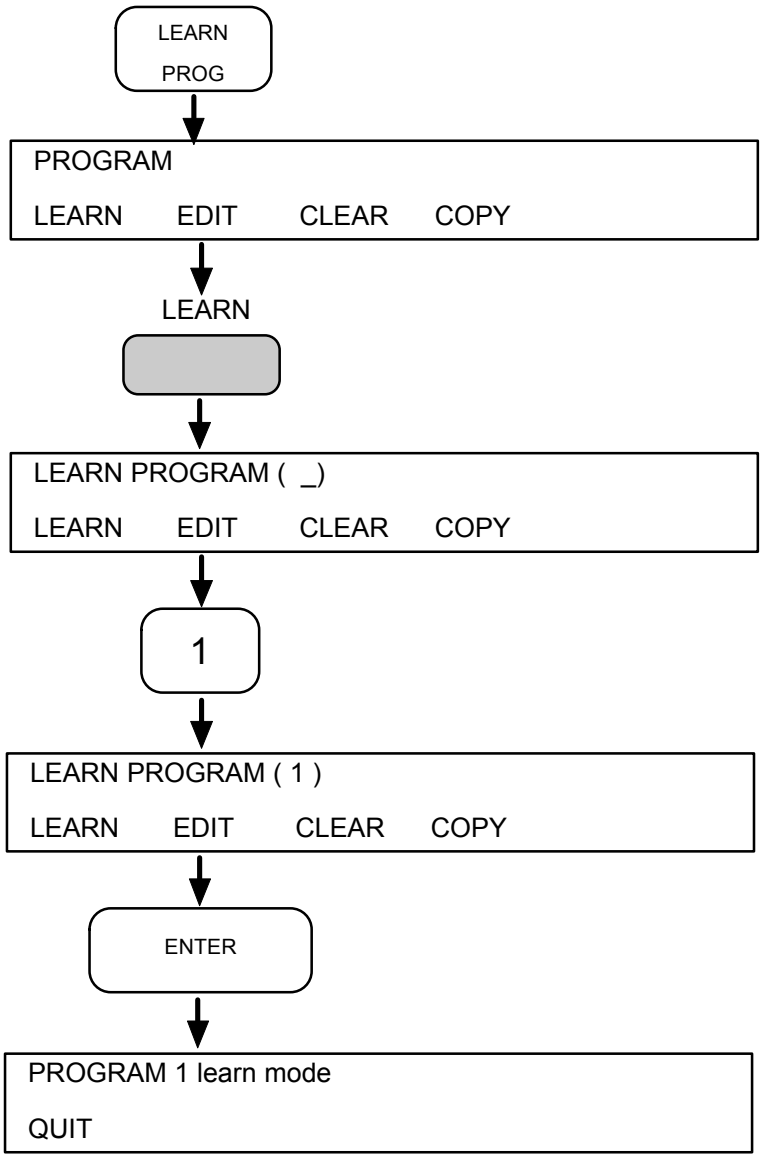

Press the LEARN PROG hard key....

... to select the learn program menu.

Press the LEARN soft key....

... and the display invites you to enter the number of the program to be learnt.

Key in the program number....

...e.g.1...

... and enter it.

The instrument is now in the learn mode. The commands entered are not executed immediately, but are stored as program instructions.

Axion Exhibit 1024
Axion v. Agilent

11.4.2 LEARNT PROGRAM EXAMPLE

In the following example the instrument is programmed to subject the item under test to a series of frequency sweeps of increasing amplitude. The aim is to test the item for linearity.

The procedure is: reset the control settings (as described in Chapter 3, Section 6.1), set up a frequency sweep (as described in Chapter 3, Section 7.1), store the set-up in store number 1 (similar to recall procedure below), then proceed as follows:

PROGRAM 1 learn mode QUIT	Enter the learn mode, as described in Section 11.4.1.
↓ STORE/ RECALL	Press the STORE/RECALL hard kev....
↓ [SET-UP] STORE RECALL CLEAR	... to select the set-up menu. The titles of the set-up facilities are shown above the soft keys.
↓ RECALL	Press the RECALL soft key....
↓ RECALL SET-UP (_) STORE RECALL CLEAR	... and the display invites you to enter the number of the set-up to be recalled.
↓ 1	Key in the set-up number....
↓ RECALL SET-UP (1) STORE RECALL CLEAR	...e.g.1...
↓ ENTER	... and enter it.
↓ PROGRAM 1 learn mode QUIT	The display reminds you that the instrument is still in the learn mode. The recalled set-up includes the SWEEP parameters.
↓ VIEW FILE ↓	Press the VIEW FILE hard key....

Axion Exhibit 1024
Axion v. Agilent

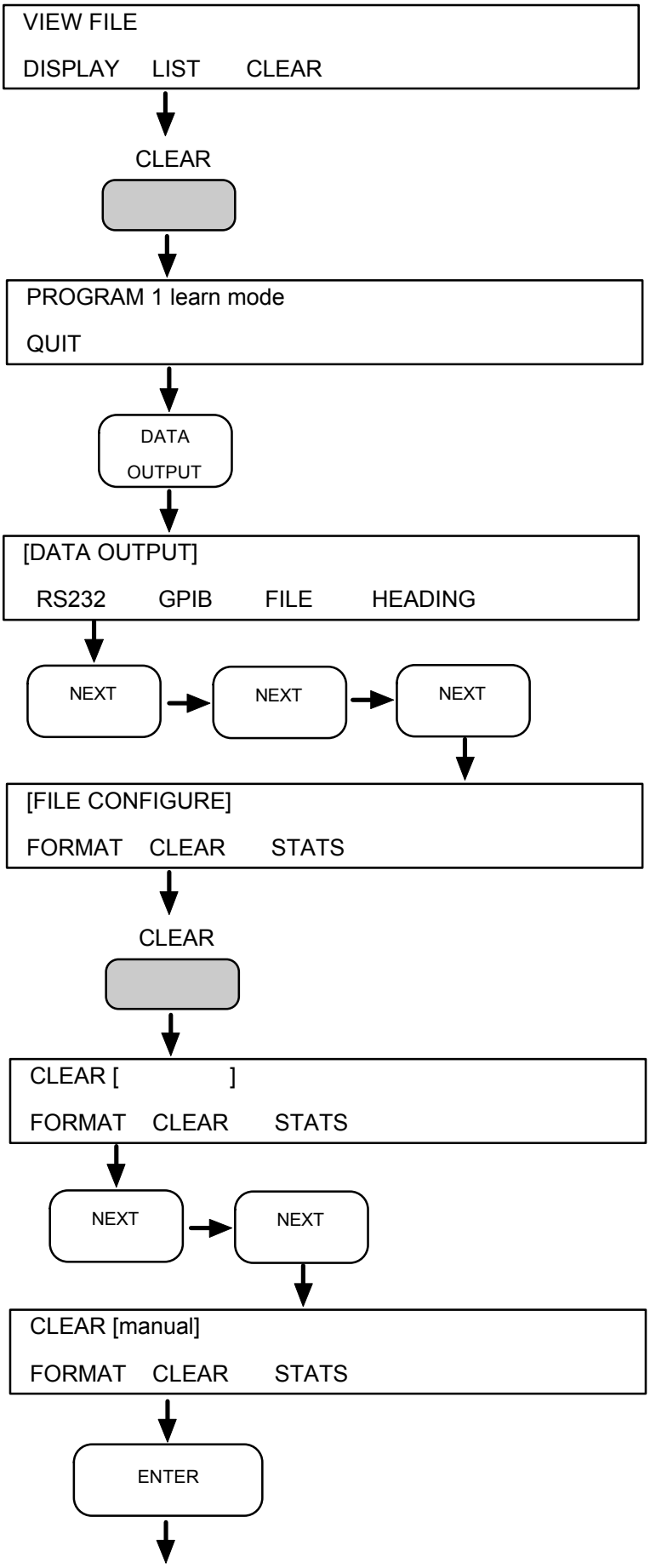

... to select the view menu. The titles of the file facilities are shown above the soft keys.

Press the CLEAR soft key to erase any data that may be in the history file.

The display reaffirms the learn mode.

Now press the DATA OUTPUT soft kev....

...to get into the data output menu...

...and select the third page on...

... which contains the file configure functions.

Press the CLEAR soft key...

...to access the clear file parameter. When a control parameter is first accessed in the learnt program mode no setting is shown, as it is yet to be entered into the program.

...So, press the NEXT key twice...

...to select [manual] clear. This setting allows the data from several sweeps to be filed, which, in the present example, is what we want.

Enter the clear file setting...

Axion Exhibit 1024
Axion v. Agilent

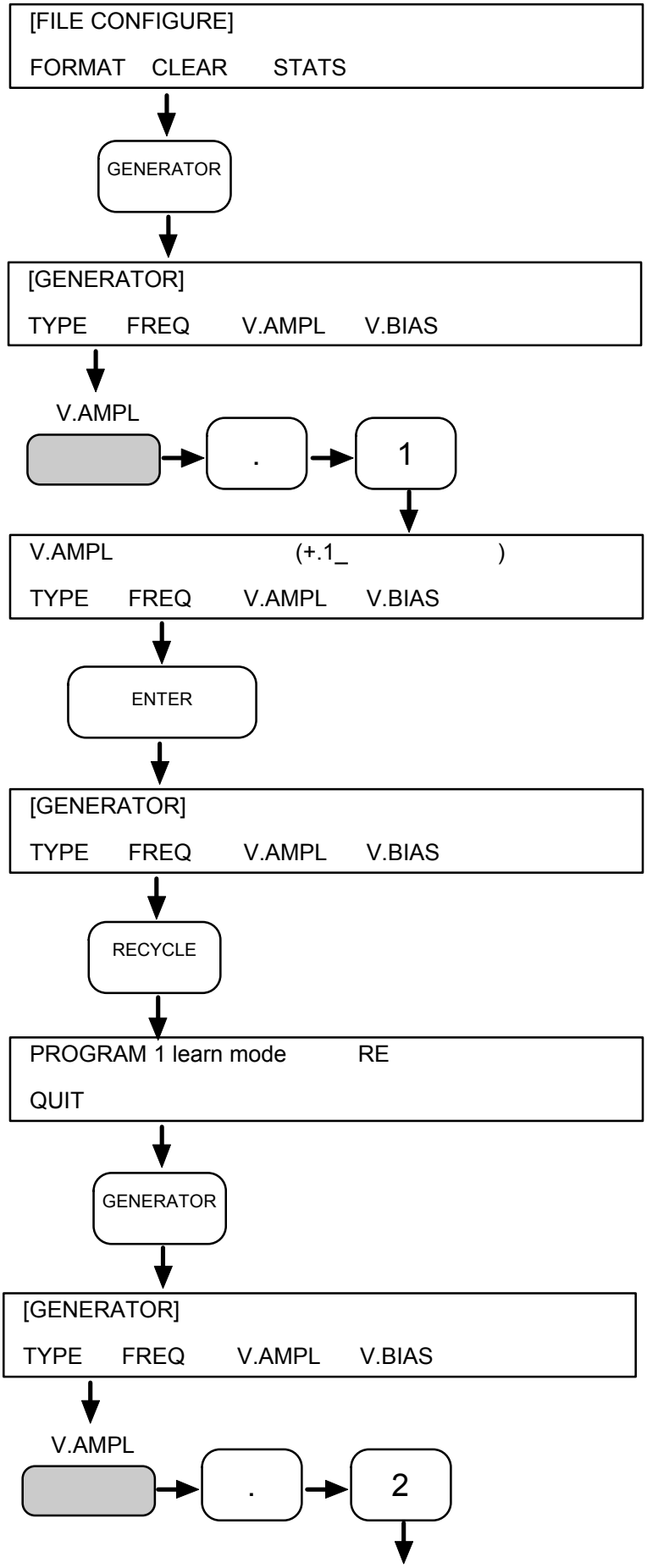

...and “FILE CONFIGURE” is displayed again, to show that the last entry is complete.

Next, press the GENERATOR hard key....

...to select the [GENERATOR] menu.

Select V.AMPL and key in the drive amplitude for the first sweep, e.g. (0).1V. (There is no need to key in the leading zero.)

Enter the amplitude value...

...and “GENERATOR” is displayed again to show that entry is complete.

Enter a recycle instruction to complete the first phase of the test program.

The display reaffirms the learn mode and shows the command code “RE” for the recycle instruction

The remaining part of the program, which commands further sweeps at increasing amplitudes, is entered by repeating the key presses from GENERATOR to RECYCLE for each amplitude value.

Axion Exhibit 1024
Axion v. Agilent

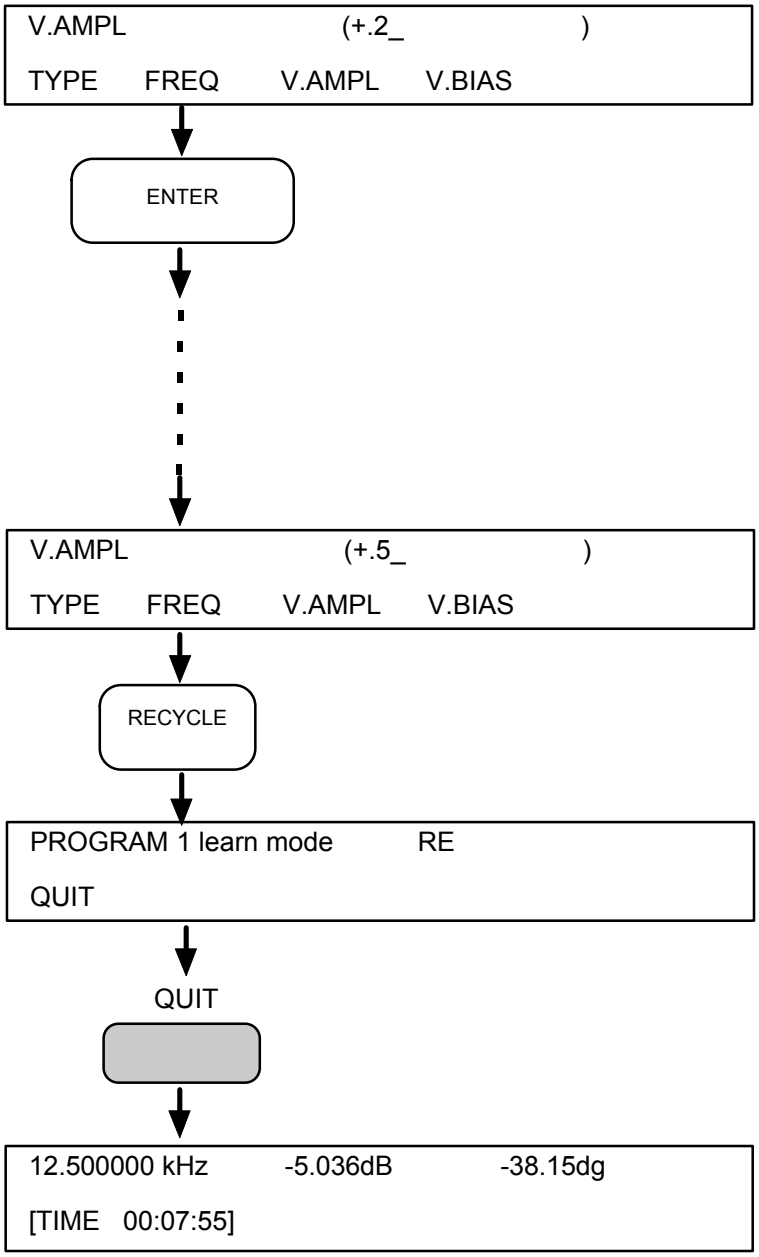

When the last program instruction has been entered, press QUIT to exit from the learn mode.

The instructions which make up this program can be seen in Section 11.6, “Editing a Learnt Program”.

Axion Exhibit 1024
Axion v. Agilent

11.5 EXECUTING A LEARNT PROGRAM

A program is started simply by entering the program number from EXECUTE PROGRAM. The procedure is:

EXECUTE PROGRAM

Press the EXECUTE PROGRAM hard kev...

EXEC. PROGRAM (_)

...and the display invites you to select a program.

1

Key in a program number....

EXEC. PROGRAM (1)

...e.g. 1...

ENTER

...and enter it.

12.500000 kHz -5.036dB -38.15dg
[TIME 00:07:55] 40. FILE CLEARED

Program 1 is now executed. The display is updated as the program progresses., e.g.

the history file has been cleared,

12.500000 kHz -5.036dB -38.15dg
[TIME 00:07:55] 92. SET-UP RECALLED

a program set-up has been recalled,

12.500000 kHz -9.025dB -27.67dg
[TIME 00:07:55] 20. SWEEP COMPLETE

a sweep has been completed.

When the example program is finished the basic data of five sweeps, made at increasing drive signal amplitudes, are contained in the history file. With the sweep set for 50 measurement points this amounts to 250 data blocks.

Results may now be displayed in various formats, by selecting the appropriate source and coordinates from the DISPLAY menu. The results may then be

- displayed in succession, with the VIEW FILE facility,
- plotted, with the PLOT facility, and/or
- output to remote devices via the GPIB or RS232 ports.

Axion Exhibit 1024
Axion v. Agilent

11.6 EDITING A LEARNT PROGRAM

EDIT allows a learnt program to be altered. Instructions may be inserted or deleted.

11.6.1 ENTERING THE EDIT MODE

To enter the edit mode the procedure is:

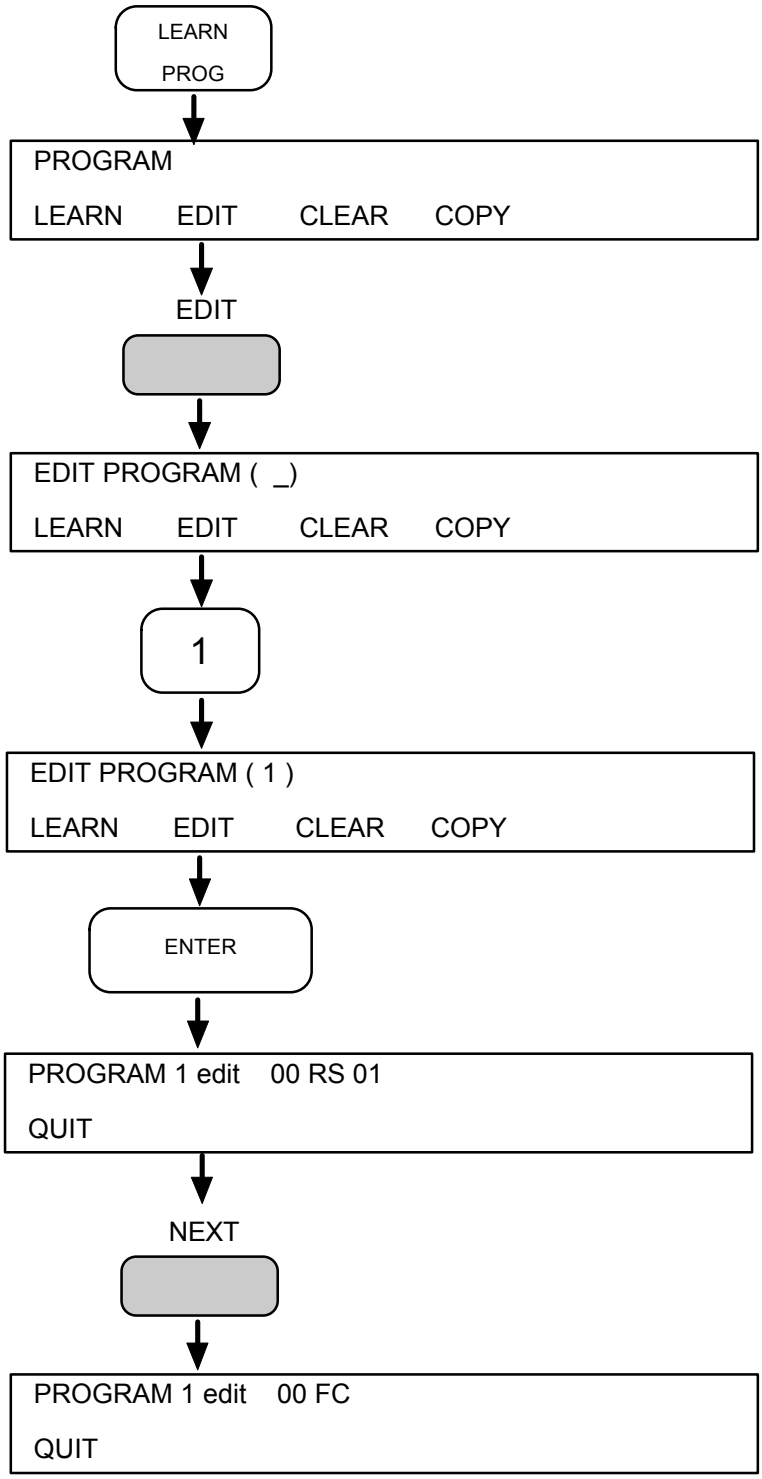

Press the LEARN PROG hard key....

... to select the learn program menu. The titles of the program facilities are shown above the soft keys.

Press the EDIT soft key....

... and the display invites you to enter the number of the program to be edited.

Key in the program number....

...e.g.1...

... and enter it.

The first instruction in the program is now displayed, in the form of a command code. This particular code means, “Recall set-up 1”.

Each program instruction may be selected in turn, with the NEXT soft key.

The second instruction, now displayed, is the code FC which means, “Clear history file”.

The command codes for the complete program are listed on the next page.

Axion Exhibit 1024
Axion v. Agilent

11.6.2 LISTING OF EXAMPLE PROGRAM

Command code	Comments
00 RS 01	Recall set-up number 1
00 FC	File Clear, i.e. clear the history file
00 MC 01	Set history file clear mode to manual. This inhibits the automatic file clear function and allows the history file to store the data from several sweeps.
00 VA +1.0000E-01	Set the drive signal amplitude to 0.1V
00 RE	Recycled measurements. This command takes the instrument through the first sweep.
00 VA +2.0000E-01	Set the drive signal amplitude to 0.2V
00 RE	Recycled measurements. This command takes the instrument through the second sweep.
00 VA +3.0000E-01	Set the drive signal amplitude to 0.3V
00 RE	Recycled measurements. This command takes the instrument through the third sweep.
00 VA +4.0000E-01	Set the drive signal amplitude to 0.4V
00 RE	Recycled measurements. This command takes the instrument through the forth sweep.
00 VA +5.0000E-01	Set the drive signal amplitude to 0.5V
00 RE	Recycled measurements. This command takes the instrument through the fifth sweep.
99 #Q	Quit program.

This program may be modified as shown in Section 11.6.3.

Axion Exhibit 1024
Axion v. Agilent

11.7 USING THE EDIT FUNCTIONS

The way in which the edit functions are used to modify a program is shown in the following example. In this particular sequence the aim is to change the drive amplitude of the first sweep in the example program.

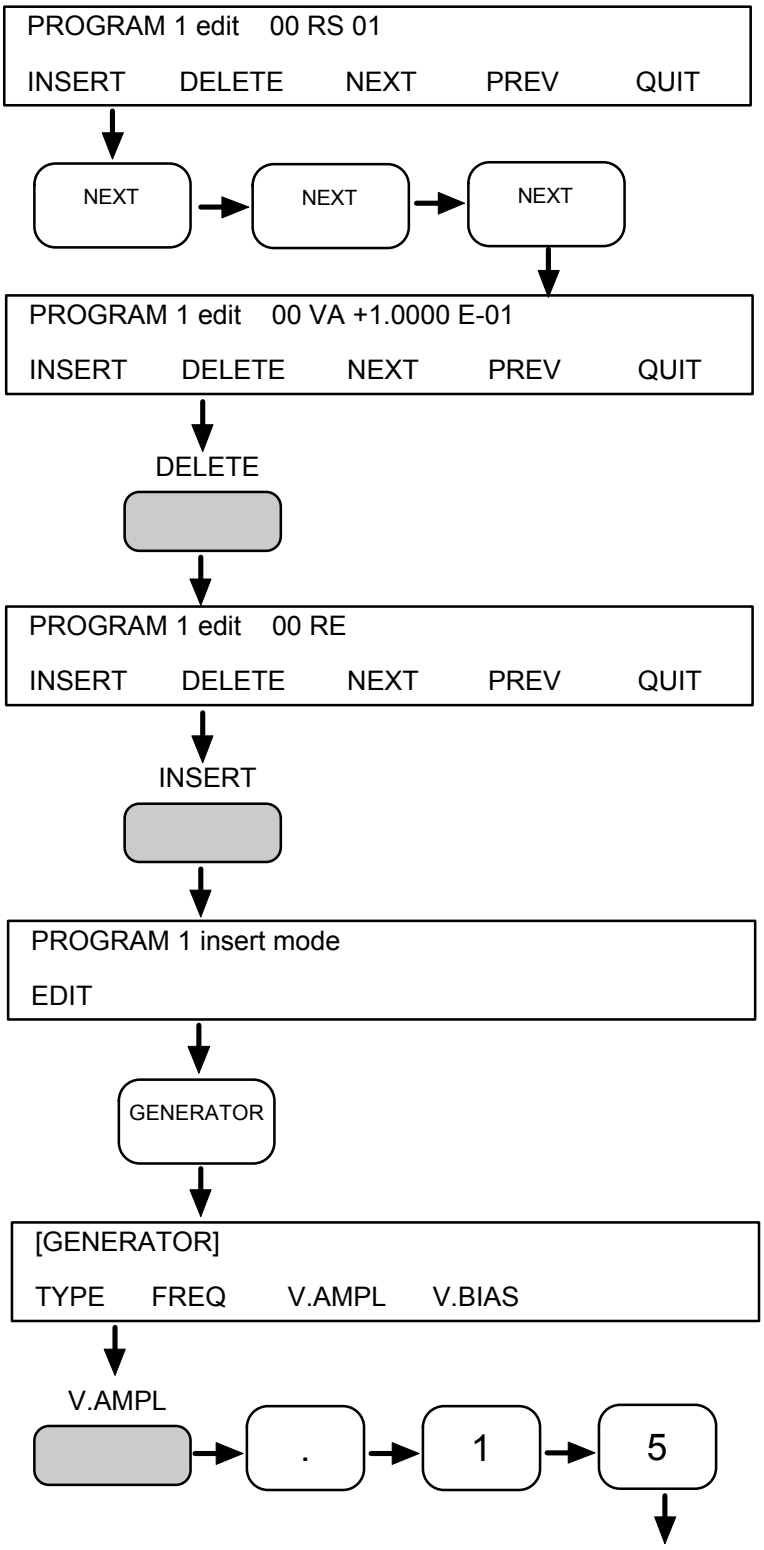

Enter the edit mode as shown in Section 11.6.1...

...and step to the instruction to be altered...

i.e. the instruction which sets the drive amplitude for the first sweep.

Delete this instruction....

(the instruction which follows it is displayed)

...and press INSERT....

...to enter the insert mode.

Now select...

...the [GENERATOR] menu...

...and key in the new drive amplitude, e.g. (0).15V.

Axion Exhibit 1024
Axion v. Agilent

```
V.AMPL                    (+.15_              ) [ V]
TYPE    FREQ    V.AMPL    V.BIAS
```

(The new value appears within the round brackets.)

↓

ENTER

Enter the new amplitude value...

↓

```
[GENERATOR]
TYPE    FREQ    V.AMPL    V.BIAS
```

...and “GENERATOR” is displayed to show that entry is complete.

↓

ENTER

Since no further commands are to be inserted at this time, press ENTER again to return to...

↓

```
PROGRAM 1 insert mode
EDIT
```

...the “insert mode” display.

↓

EDIT

Now press EDIT...

↓

```
PROGRAM 1 edit    00 RE
INSERT    DELETE    NEXT    PREV    QUIT
```

...to return to the EDIT mode.

↓

PREV

Step back to the previous instruction (just entered) to check it.

↓

```
PROGRAM 1 edit    00 VA +1.5000 E-01
INSERT    DELETE    NEXT    PREV    QUIT
```

The new amplitude value is seen to be correct...

↓

QUIT

...so QUIT the edit mode...

↓

```
100.00000 kHz    -8.023dB    -25.57dg
[TIME   00:07:55]
```

...to return to the pre-edit display.

Axion Exhibit 1024
Axion v. Agilent

REMEMBER THE LEARNT PROGRAM RULES:

- A program may call another program as a sub-routine, from anywhere within itself. This sub-routine, in turn, may call a sub-sub-routine, and program “nesting” may be extended in this way up to five levels (counting the initial program as the first level). A sixth level is permitted on one condition, *that the routine at this level calls the initial program on completion*.
- A program may execute itself, but only if the execute instruction is the last one in the program.

11.8 COPYING A LEARNT PROGRAM

COPY allows a complete learnt program to be copied, under another program number. This facility is used for transferring learnt programs to non-volatile memory (program numbers 10 through 18). It may also be used, with EDIT, to derive one learnt program from another.

Note that the instrument must be operating in the supervisor mode for programs to be copied to program numbers 10 to 18. To protect these programs it is advisable to return the instrument to the normal mode immediately after copy complete, otherwise the programs may be corrupted by an inadvertent initialize.

11.8.1 COPY PROCEDURE

The copy procedure is:

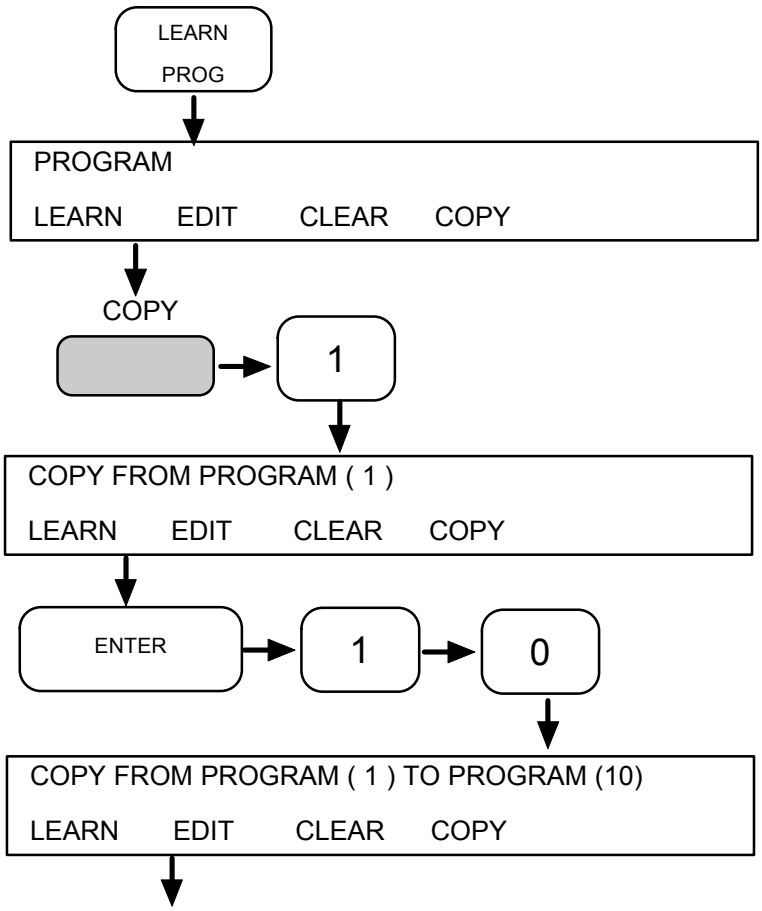

Press the LEARN PROG hard key....

... to select the learn program menu.

Press COPY and key in the number of the program to be copied.

Then press ENTER, and then key in the number under which the program is to be copied.

Axion Exhibit 1024
Axion v. Agilent

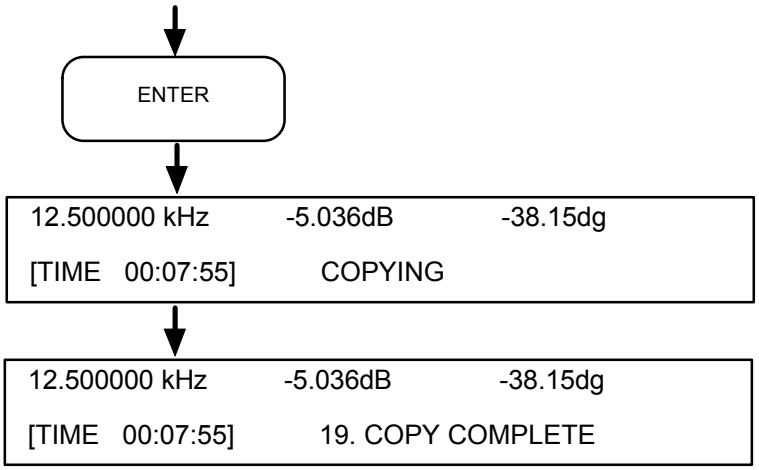

Enter the request...

...and, to show that something is happening, the message, “COPYING” is displayed...

...followed, when copying is complete, by the message, “19. COPY COMPLETE”.

If a program is to execute itself (via an EPn instruction) remember to change the number n to the “copy to” program number.

Axion Exhibit 1024
Axion v. Agilent

INDEX

accessories 2.3
alternative circuit forms (display) 5.17
analyzer
  auto-integration 5.6
  current input coupling 5.11
  current input range 5.11
  default settings 3.11
  integration time 5.6
  measurement delay 5.6
  menu summary 4.3
  menu terms 5.6
  mode 5.8
  query remote commands 8.12
  remote commands 8.3
  voltage input connections 5.10
  voltage input coupling 5.9
  voltage input range 5.9
ASCII output
  to a controller, RS423 7.13
  to a printer, RS423 7.12
  to a talk only device, GPIB 7.6
assigning error events, GPIB 7.9
auto impedance mode (analyzer) 5.8

Baud rate switches, RS423 7.11
binsorting (with CTM) 5.33
binsorting (with test machine) 5.34
Bode plot, making a (example) 3.19

clear learn program 5.48
clear set-up 5.47
combined use of RS423 and GPIB 7.18
commanding a single measurement 3.14
constant, scaling, store status 5.45
copy learn program 5.48

data handshake, RS423 7.11
data output
  heading, RS423 and GPIB 5.28
  menu summary 4.6
  menu terms 5.27
  ports 5.27
  remote commands 8.8
direct action remote commands 8.12
display 3.6
  circuit 5.17
  coordinates, setting the (example) 3.22
  menu summary 4.5
  menu terms 5.15
  phase 5.16
  remote commands 8.5
  result (source and coordinate) 5.15
  variable 5.15
dump output format, RS423 and GPIB 7.14
grounding the instrument 2.4

edit learn program 5.48
error beep 5.50
event status enable 7.9
execute program, remote command 8.12

file
  clear 5.37
  configure 5.30
  configure, remote commands 8.9
  format 5.30
  statistics 5.30

generator
  current amplitude 5.4
  voltage amplitude 5.3
  current bias 5.4
  voltage bias 5.3
  frequency 5.3
  menu summary 4.3
  menu terms 5.3
  output, vernier adjustment of 5.38
  remote commands 8.3
  setting the (example) 3.12
  start and stop control 5.5
  type: voltage or current 5.3
GPIB
  capability code 7.3
  configure 5.28
  configure, remote commands 8.8
  connector 7.3
  device address 7.4
  dump output 7.6
  input command terminator 7.4
  interface 7.3
  output data format 7.6
  output separator 5.28
  output terminator 5.28
  status 5.42
  switch settings (example) 7.5
  switches 7.4
  talk only switch 7.5
group delay mode (analyzer) 5.8

hard keys 3.4
hard key assignments 3.5
history file
  clear 5.37
  default settings 3.19
  display 5.37
  list 5.37
  status 5.44
  reading the (example) 3.20

initialise 5.50

Axion Exhibit 1024
Axion v. Agilent

input command terminator and character
frame, RS423 7.11
input, analyzer, remote commands 8.4
installinga GPIB plotter (for PLOT) 3.21
instrument keyboard 3.4

key features (of instrument) 1.3

learn program
clear 5.48
copy 5.48
edit 5.48
learn 5.48
memory status 5.41
menu summary 4.9
menu terms 5.48
remote commands 8.11
limits
item 5.33
menu summary 5.33
remote commands 8.10
local lockout 7.17

making a Bode plot 3.21
making a Nyquist plot 3.22
mains
connection 2.6
fuse 2.5
lead 2.6
voltage selector 2.5
measurement
auto integration 5.6
delay 5.6
integration time 5.6
limits check 5.33
mode 5.8
preliminaries 3.9
recycled (example) 3.19
statistics 5.46
menu summary
analyzer 4.3
data output 4.6
display 4.5
generator 4.3
learn program 4.9
plotter 4.5
plotter axes 4.6
scale / limits 4.7
self test 4.9
status 4.8
store / recall 4.9
sweep 4.4
vernier 4.8
view file 4.8
menu terms
analyzer 5.6
data output 5.27
display 5.15
generator 5.3
learn program 5.48
plotter 5.18
plotter axes 5.24
scale / limits 5.31
self test 5.50
status 5.41
store / recall 5.47
sweep 5.12
vernier 5.38
view file 5.37
messages and error codes 9.1
microprocessor status 5.42
mini-status remote commands 8.12
monitor
configurations 5.4
current limit 5.4
enable 5.4
error% 5.4
remote commands 8.3
voltage limit 5.4

normal ASCII output to
talker / listener devices, GPIB 7.6
normalize 5.31
null 5.32
normal mode (analyzer) 5.8
numeric keypad 3.4
nyquist plot, making a 3.22

parallel poll 7.10
plot
facility, using the (example) 3.21
menu terms 5.23
remote commands 8.6
types 5.26
plotter
axes 5.19
device 5.19
grid 5.18
menu summary 4.5
menu terms 5.18
mode 5.18
remote commands 8.6
scaling 5.19
scaling remote commands 8.6
scaling, vernier adjustments of 5.39
size 5.19
text 5.18
title 5.20
title edit 5.22
title entry 5.21
X-axis remote commands 8.7
Y-axis overlay remote commands 8.7
Y-axis main remote commands 8.7

Axion Exhibit 1024
Axion v. Agilent

plotter axes
menu summary 4.6
menu terms 5.24
setting the (example) 3.23
plotter X-axis
item 5.24
limits 5.24
full scale range (LIMITS) 5.24
lin / log scaling 5.25
pen 5.25
plotter Y-axis, main 5.25
plotter Y-axis, overlay 5.25
power-up status 3.6
program
keyswitch, learn program 5.49
keyswitch, scaling function 5.36
keyswitch, store / recall 5.47
query, remote commands 8.12
status 5.41

rack dimensions 2.7
rack mounting 2.7
reading the history file (example) 3.20
recall set-up 5.47
recycled measurements (example) 3.19
remote / local control, GPIB and RS423 7.16
reset 5.50
result deviation 5.33
result store status 5.45
RS423
configure 5.29
configure, remote commands 8.9
dump output 7.13
input data echo 5.29
output data format (mode) 5.29
output separator 5.29
output terminator 5.29
software handshake (XON / XOFF) 5.30
status 5.43

safety 2.3
scale / limits menu summary 4.7
scale / limits menu terms 5.31
scaling
constants 5.32
constant store status 5.45
function 5.32
function store status 5.44
remote commands 8.9
self test
menu summary 4.9
menu terms 5.50
query, remote commands 8.12
remote commands 8.12
serial interface (RS423)
connector 7.12
data handshake 7.11
output data format 7.12
standards 7.11
serial poll 7.7
service request enable 7.8
set-up store status 5.43
setting
the display coordinates 3.22
the generator (example) 3.12
the plotter axes (example) 3.23
the sweep 3.16
the time 5.50
a service request, GPIB 7.8
single measurement, commanding a 3.14
soft keys 3.4
specification 1.5
status
byte 7.7
menu summary 4.8
menu terms 5.41
remote commands 8.11
status 1
GPIB interface 5.42
microprocessor 5.42
program 5.41
RS423 interface 5.43
control set-up store 5.43
history file 5.44
status 2
scaling constants 5.45
scaling functions 5.44
statistics 5.46
stored results 5.45
store
result 5.47
set-up 5.47
stored result status 5.45
stored set-up status 5.43
store / recall
menu summary 4.9
menu terms 5.47
remote commands 8.11
sweep
direction 5.12
facility, using the 3.16
limits,
current amplitude 5.14
current bias 5.14
frequency 5.13
remote commands 8.5
voltage amplitude 5.13
voltage bias 5.14

linear frequency steps 5.13
log frequency steps 5.12
menu summary 4.4
menu terms 5.12
remote commands 8.4

sweep (continued)
  type (enable) 5.12
  setting the 3.16

talk only, GPIB 3.21, 7.5
telescopic slide fitting (Accuride) 2.8
telescopic slide fitting (Jonathan) 2.14
telescopic slide kit (Accuride) 2.7

use of manual 1,4
using a control menu 3.7
using the plot facility 3.21

ventilation 2.7
vernier
  generator adjustment 5.38
  plotter adjustment 5.39
  menu summary 4.8
  menu terms 5.38
  remote commands 8.11
view file
  menu summary 4.8
  menu terms 5.37
  query, remote commands 8.12
  remote commands 8.10

Axion Exhibit 1024
Axion v. Agilent

solartron analytical

Axion Exhibit 1024
Axion v. Agilent