US 20080037218A1

(19) United States

(12) Patent Application Publication

(10) Pub. No.: US 2008/0037218 A1

(43) Pub. Date: Feb. 14, 2008

Sharma et al.

(54) **MODULAR CHASSIS PROVIDING SCALABLE MECHANICAL, ELECTRICAL AND ENVIRONMENTAL FUNCTIONALITY FOR MICROTCA AND ADVANCED TCA BOARDS**

(76) Inventors: **Viswa M. Sharma**, San Ramon, CA (US); **William Chu**, Elmsford, NY (US); **Allen D. James**, Cottage Grove, MN (US); **Ming Siu Tseng**, Fremont, CA (US); **Neil Schlegel**, Deer Park, WI (US); **David Lentz**, Hopkins, MN (US); **Christopher D. Sonnek**, North Saint Paul, MN (US)

Correspondence Address:
PATTERSON, THUENTE, SKAAR & CHRISTENSEN, P.A.
4800 IDS CENTER
80 SOUTH 8TH STREET
MINNEAPOLIS, MN 55402-2100 (US)

(21) Appl. No.: **11/728,718**

(22) Filed: **Mar. 26, 2007**

Related U.S. Application Data

(60) Provisional application No. 60/743,761, filed on Mar. 24, 2006.

Publication Classification

(51) **Int. Cl.**
H05K 7/20 (2006.01)
H05K 5/00 (2006.01)

(52) **U.S. Cl.** **361/695**; 361/694; 361/730

(57) **ABSTRACT**

A modular chassis arrangement for electronic modules that is configurable into a mechanically and electrically interconnected structure capable of delivering scalable mechanical, electrical and environmental functionality for a multiplicity of electronic modules. In one embodiment, the electronic modules are compliant with AdvancedTCA or MicroTCA standards in a modular Pico-Shelf configuration that support stackable and/or back-to-back multiple unit chassis.

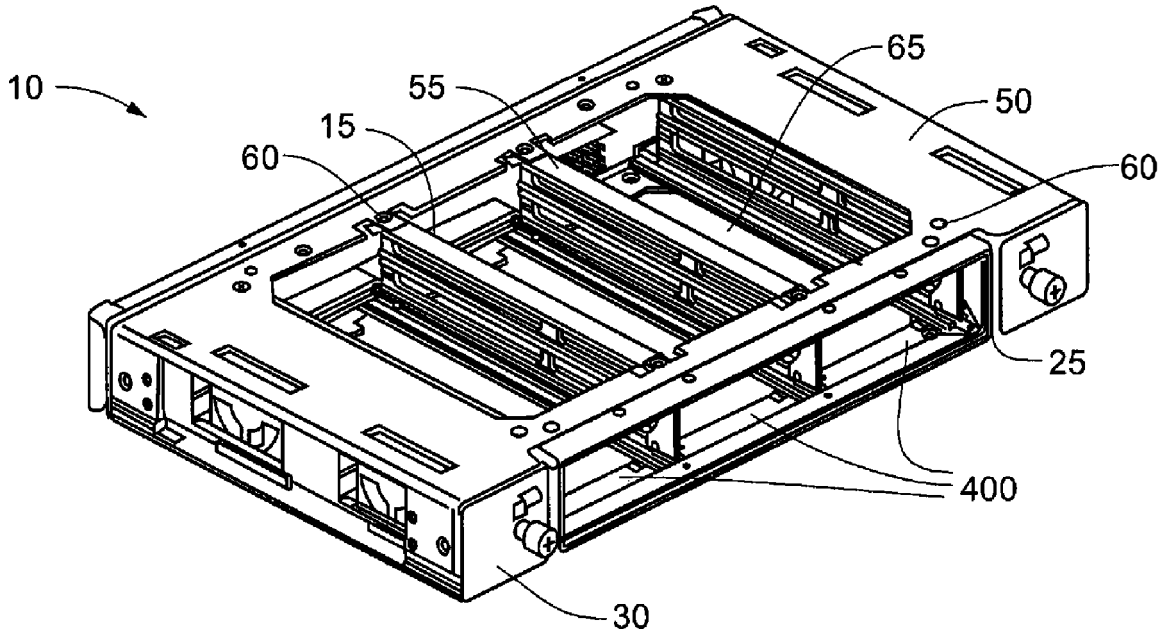

Exhibit 2016
Axion v. Agilent
IPR2024-01467

Fig. 1

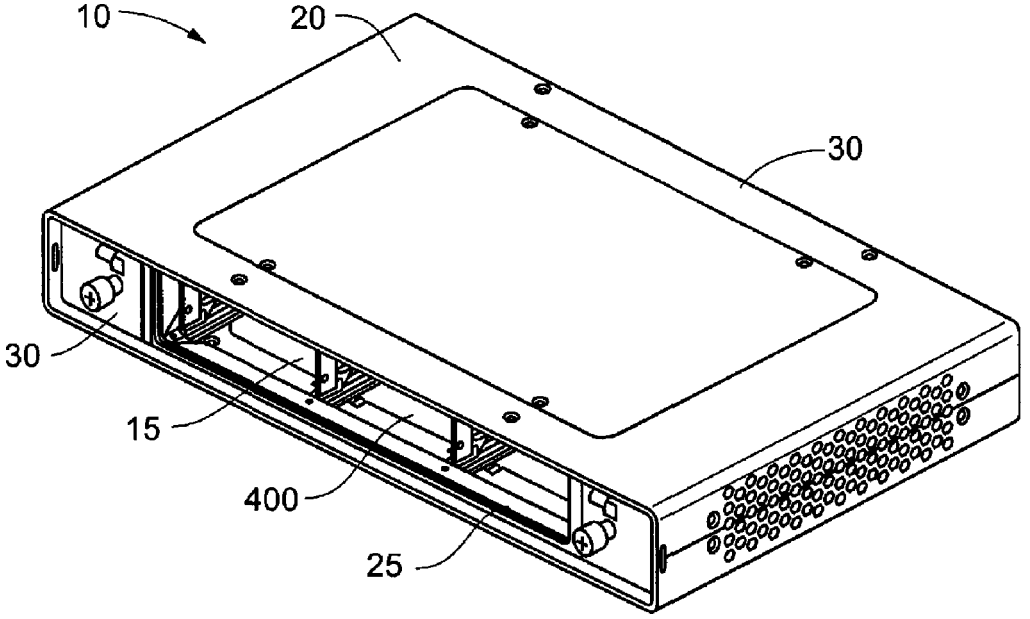

Fig. 2

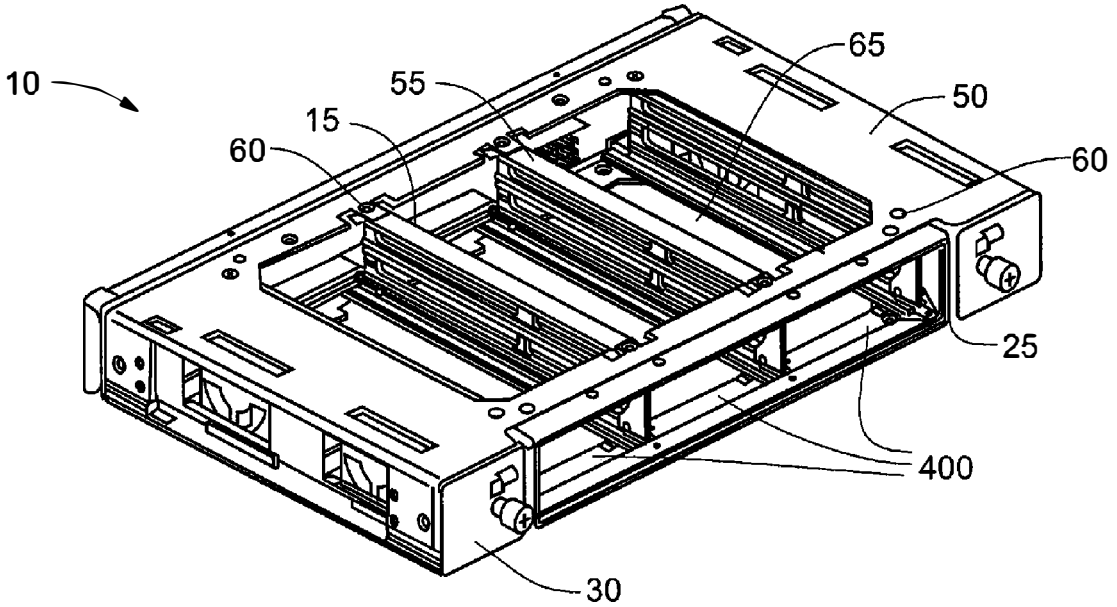

Exhibit 2016
Axion v. Agilent
IPR2024-01467

Fig. 3

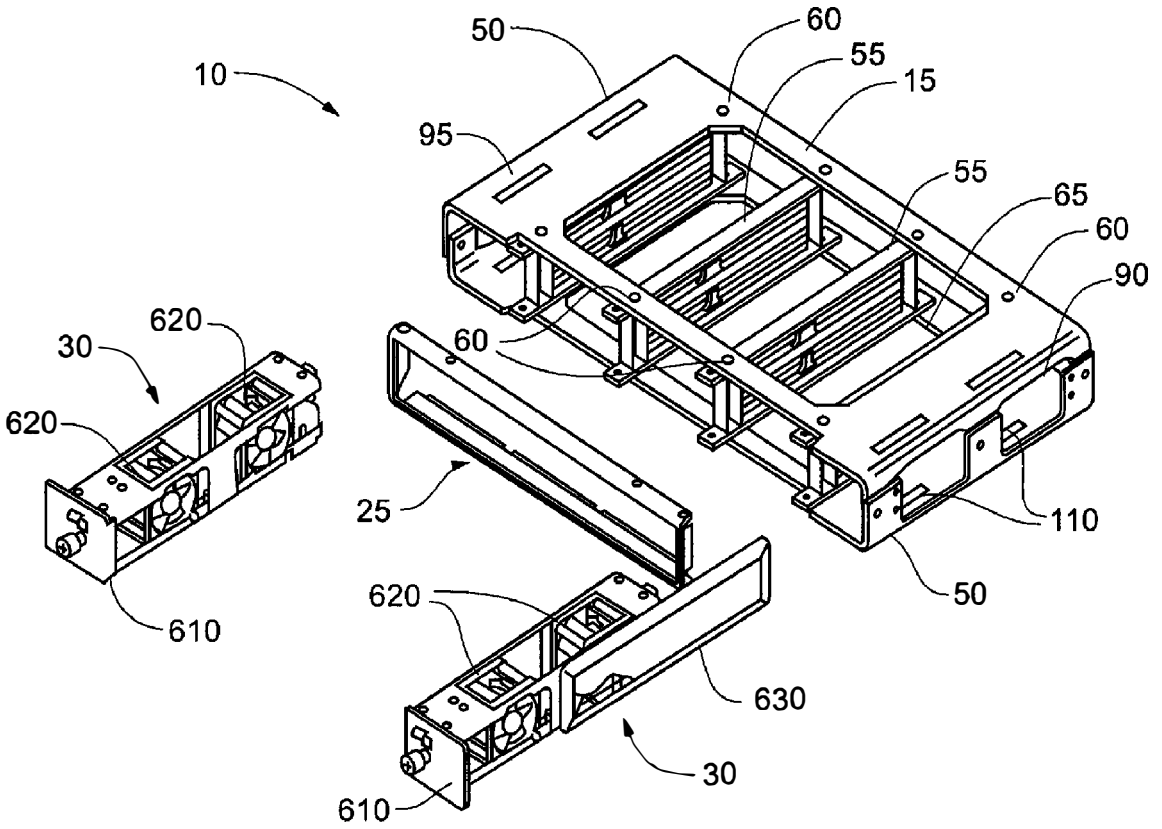

Exhibit 2016
Axion v. Agilent
IPR2024-01467

Fig. 4

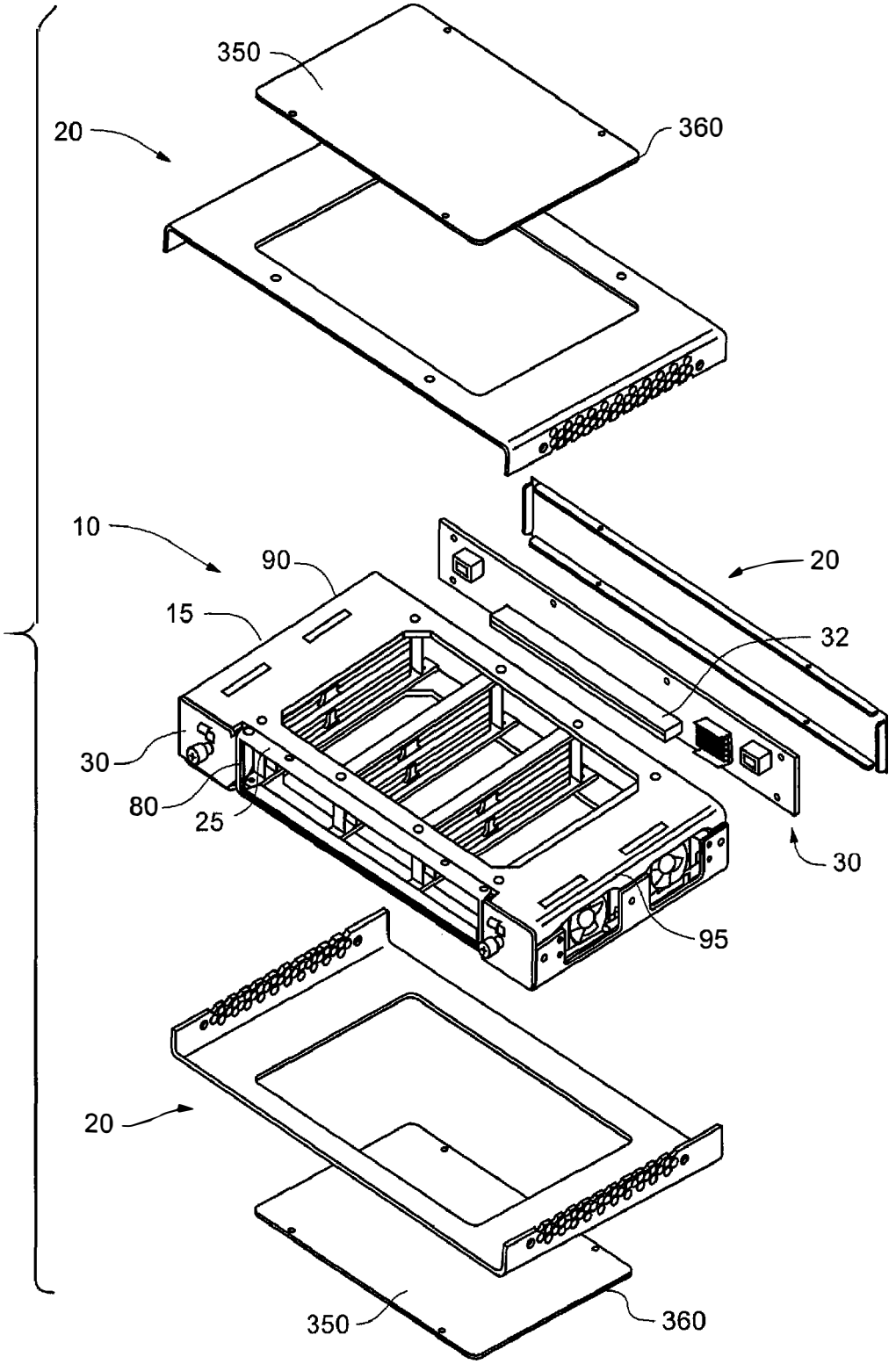

Exhibit 2016
Axion v. Agilent
IPR2024-01467

Fig. 5A

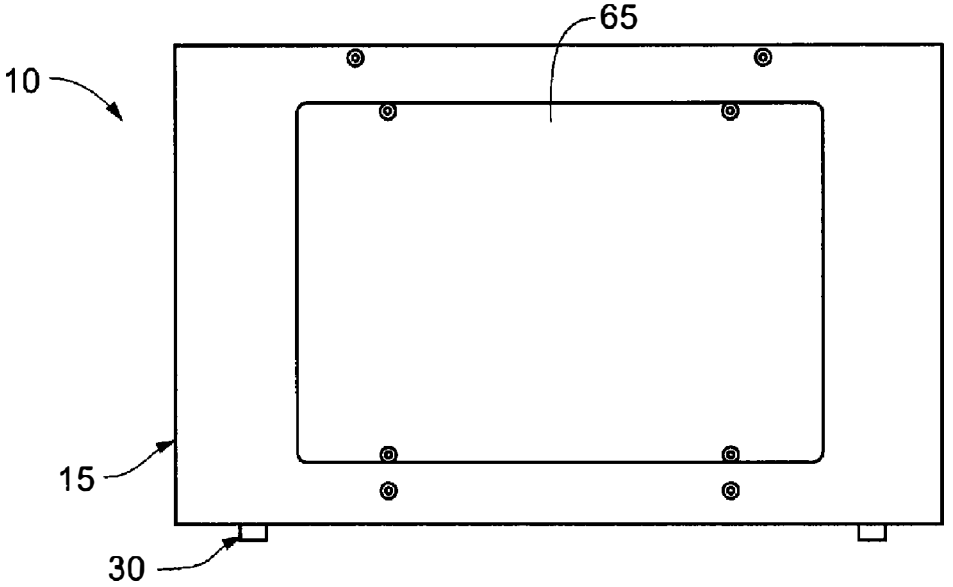

Fig. 5B

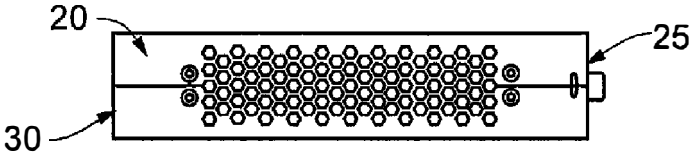

Fig. 5C

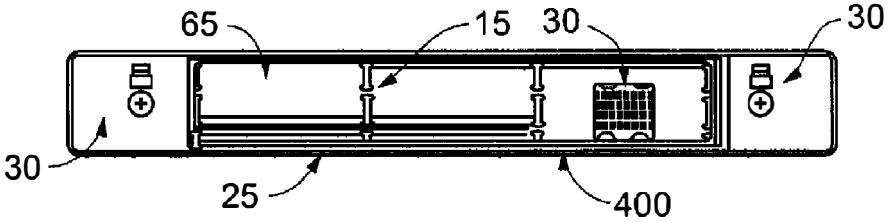

Exhibit 2016
Axion v. Agilent
IPR2024-01467

Fig. 6

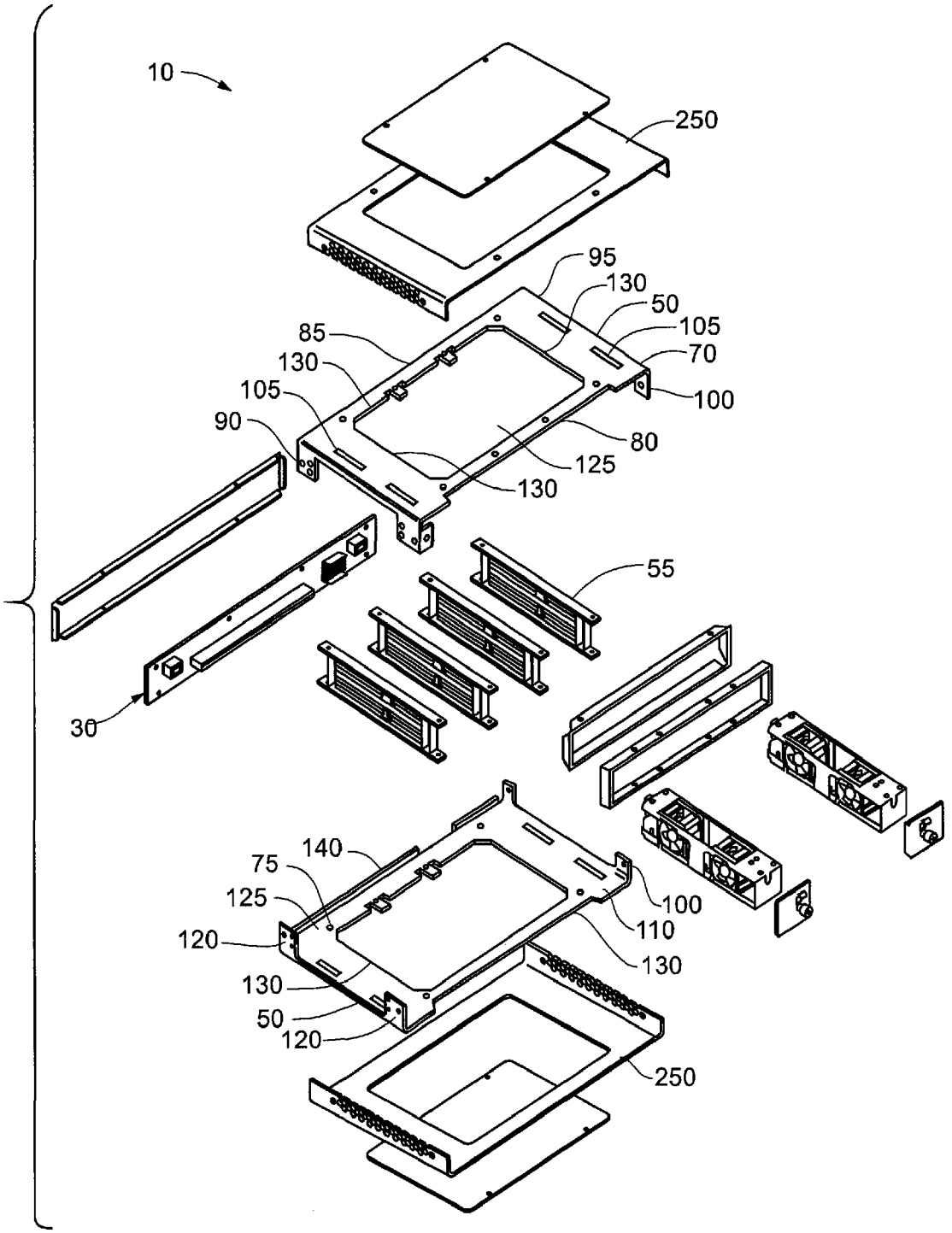

Exhibit 2016
Axion v. Agilent
IPR2024-01467

Fig. 7A

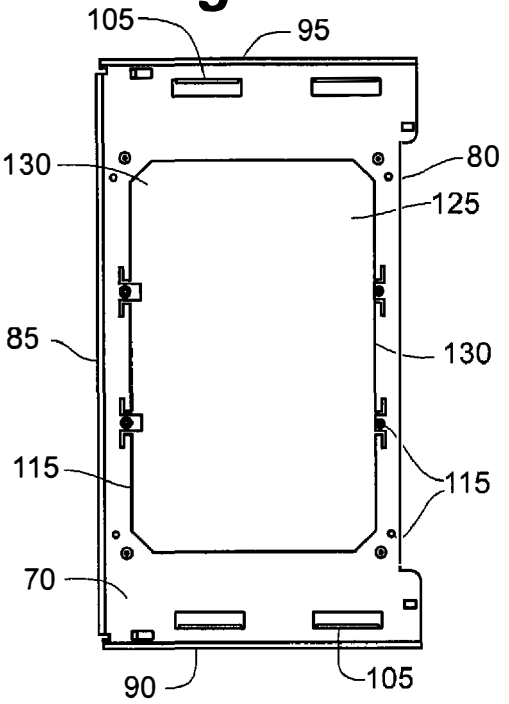

Fig. 7B

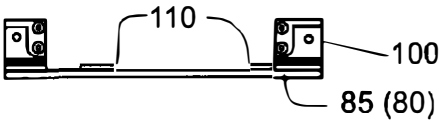

Fig. 7C

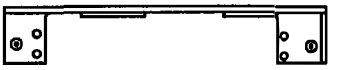

Fig. 7D

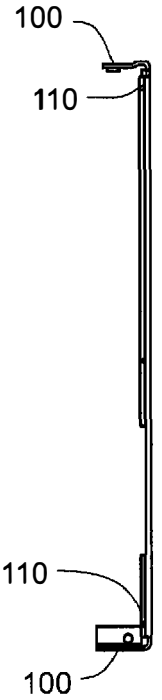

Fig. 7E

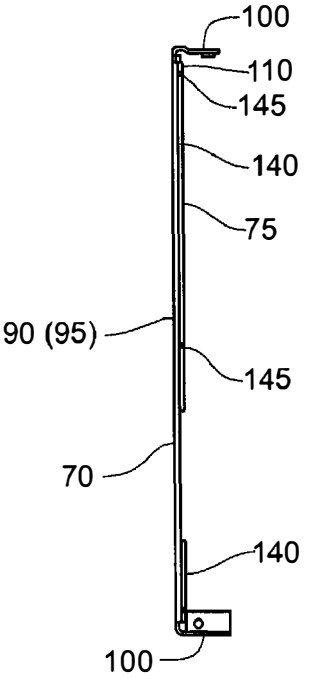

Fig. 7F

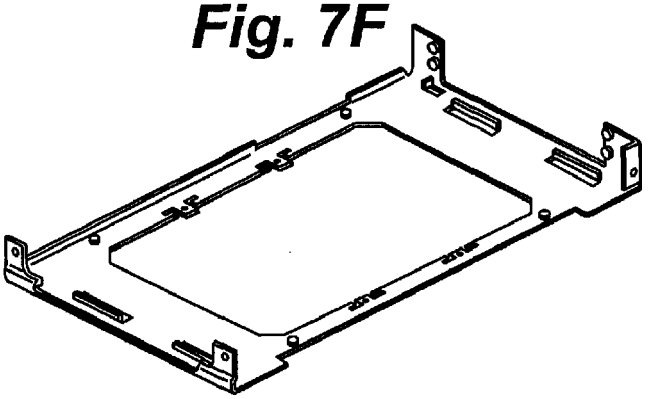

Exhibit 2016
Axion v. Agilent
IPR2024-01467

Fig. 8A

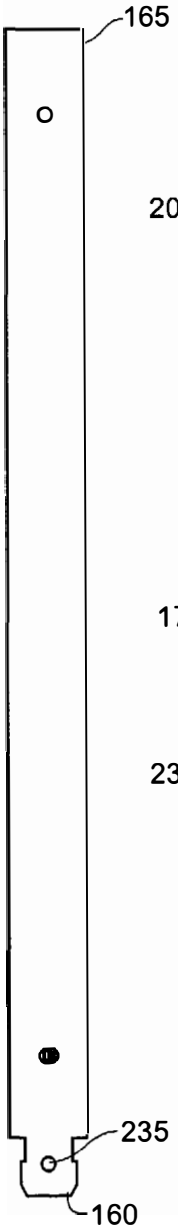

Fig. 8B

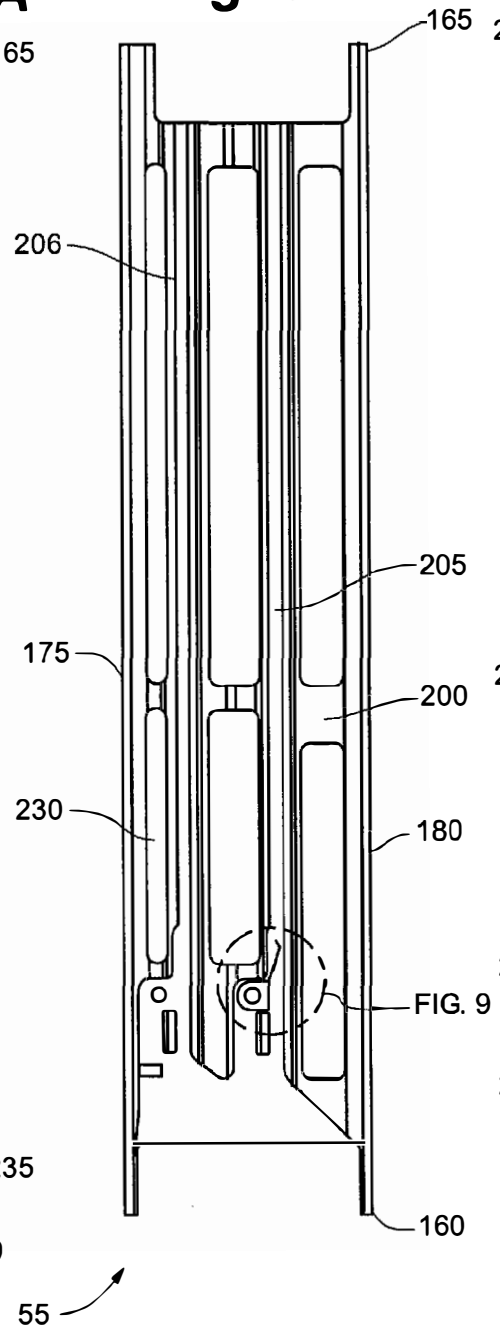

Fig. 8C

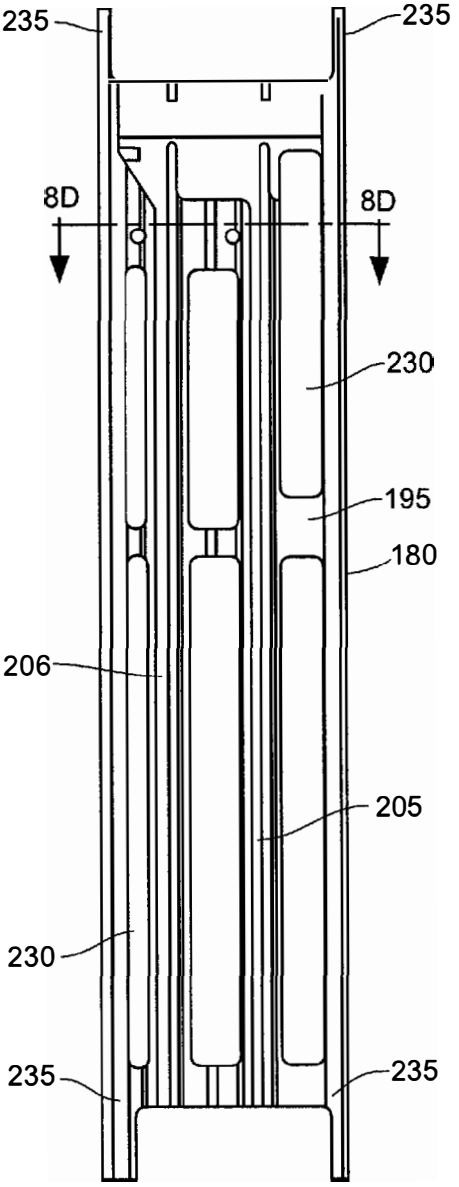

Fig. 8D

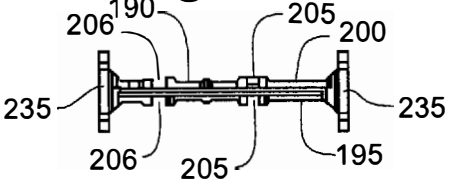

Fig. 9

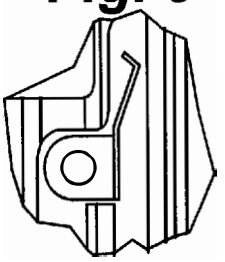

Exhibit 2016
Axion v. Agilent
IPR2024-01467

Fig. 10A

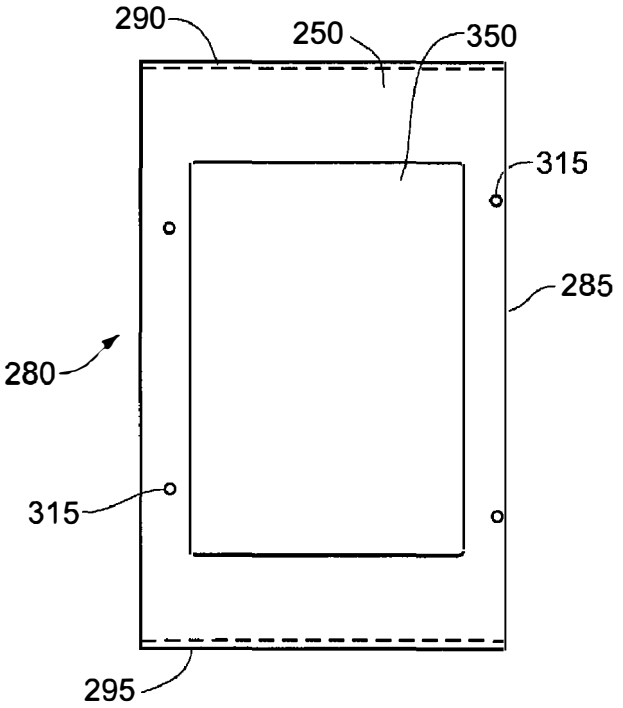

Fig. 10B

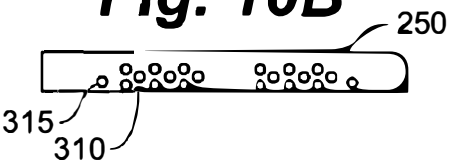

Fig. 10C

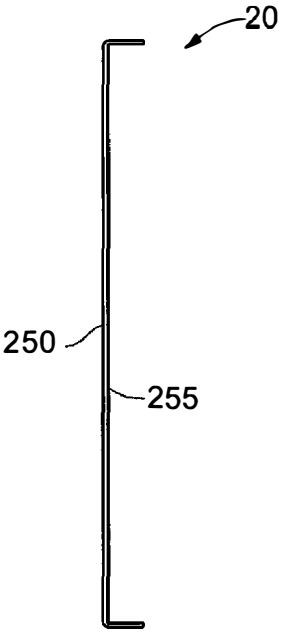

Fig. 10D

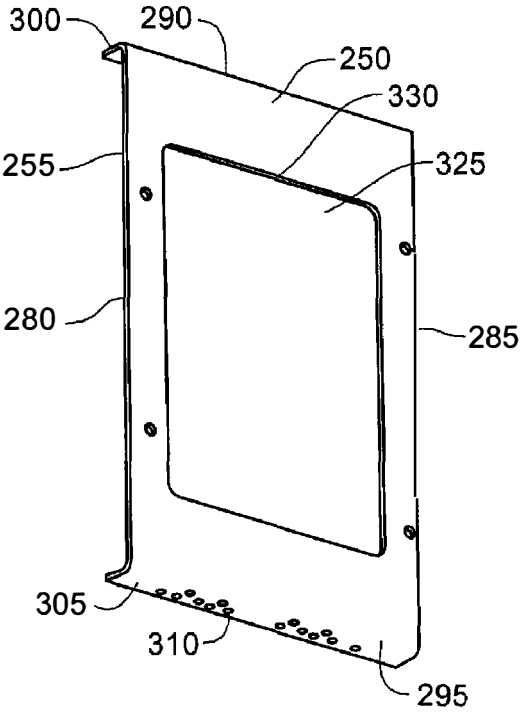

Exhibit 2016
Axion v. Agilent
IPR2024-01467

Fig. 11A

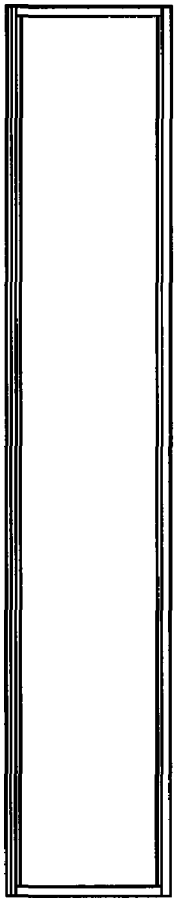

Fig. 11B

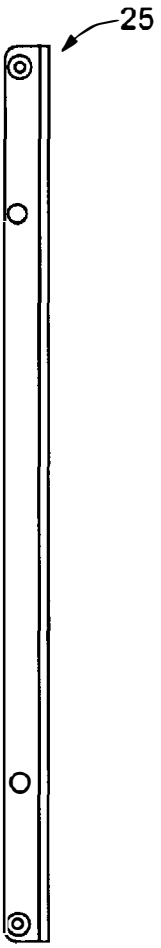

Fig. 11C

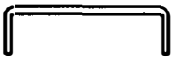

Fig. 11D

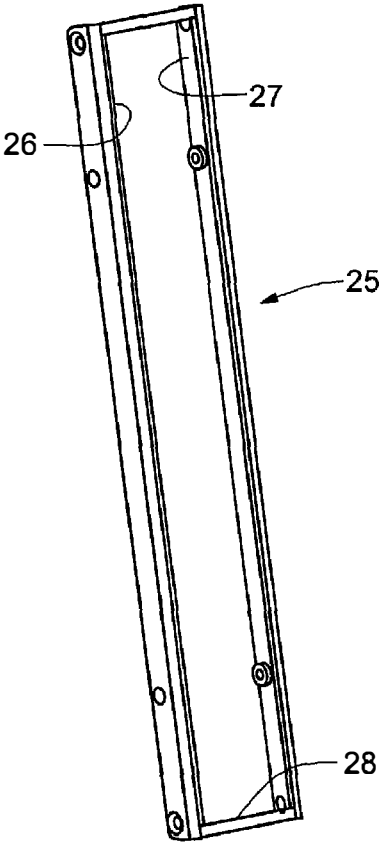

Fig. 12

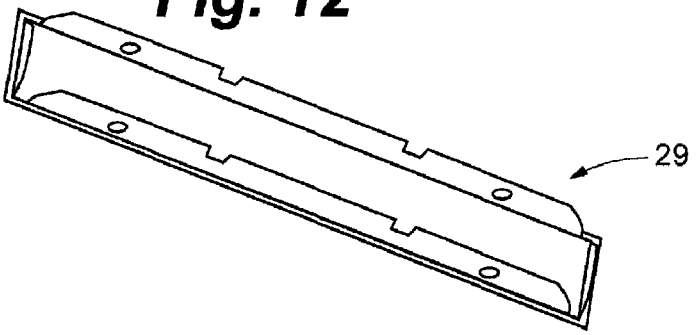

Exhibit 2016
Axion v. Agilent
IPR2024-01467

Fig. 13A

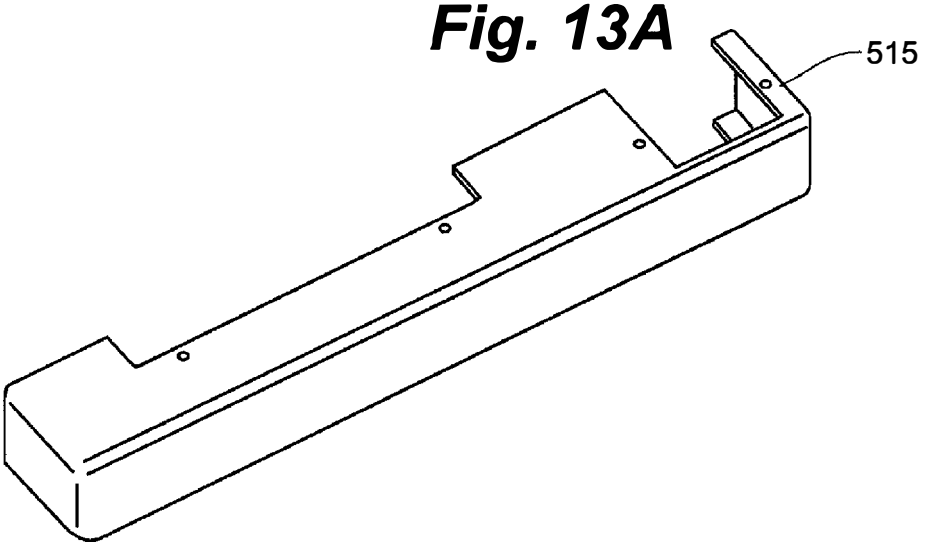

Fig. 13C

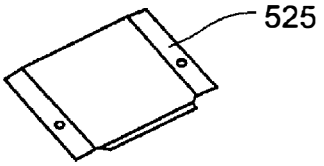

Fig. 13B

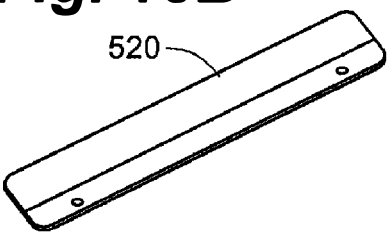

Fig. 13D

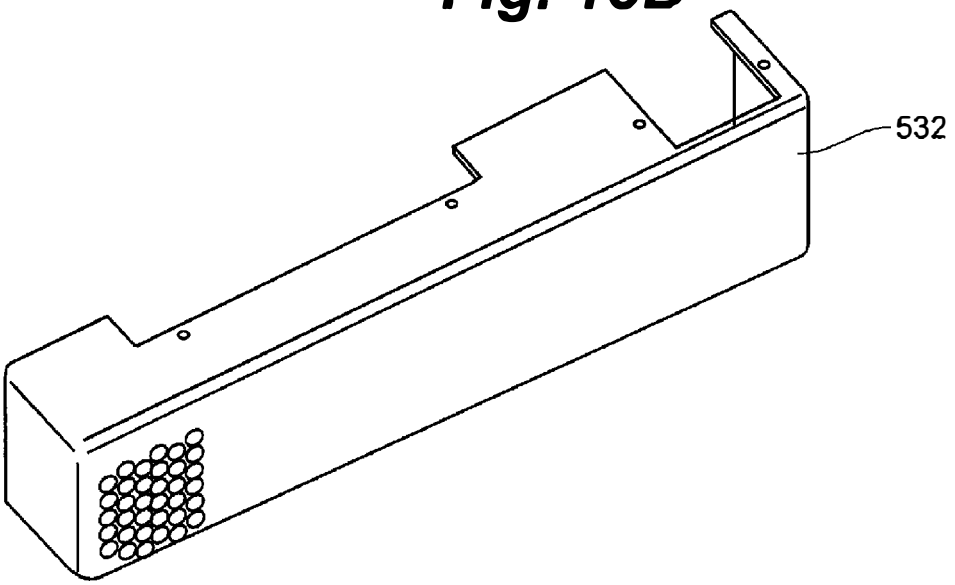

Exhibit 2016
Axion v. Agilent
IPR2024-01467

Fig. 14

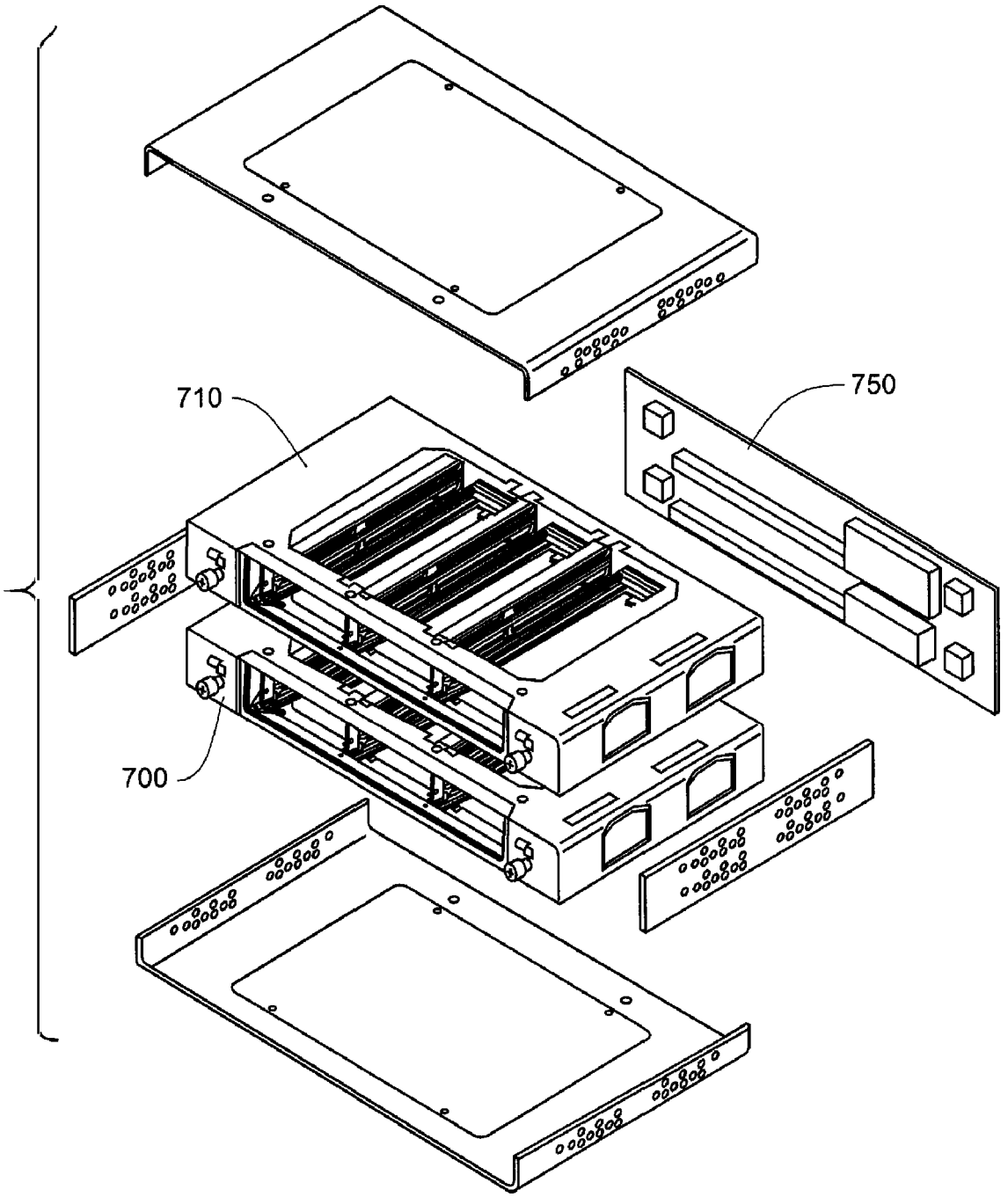

Exhibit 2016
Axion v. Agilent
IPR2024-01467

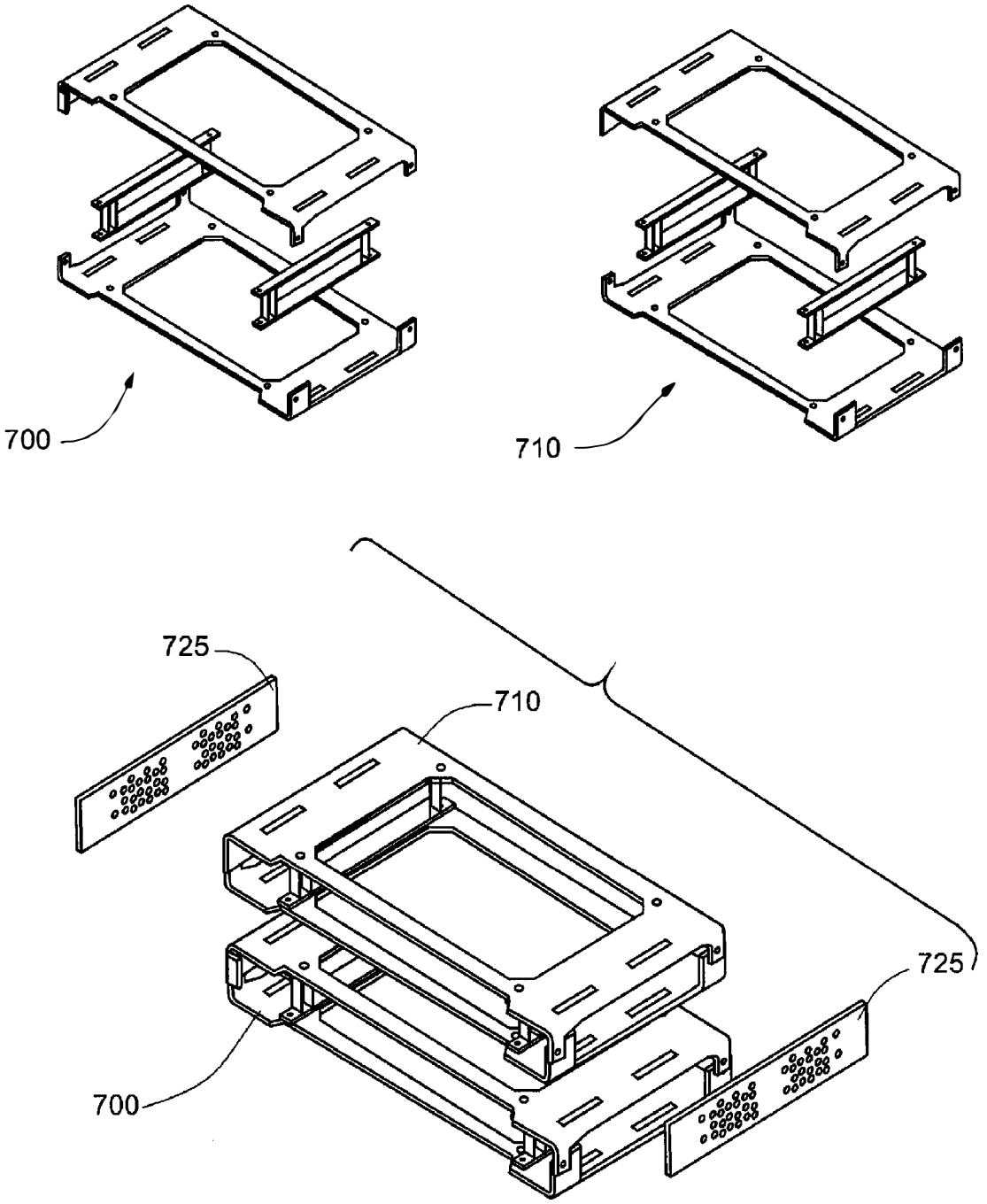

Fig. 15A

Exhibit 2016
Axion v. Agilent
IPR2024-01467

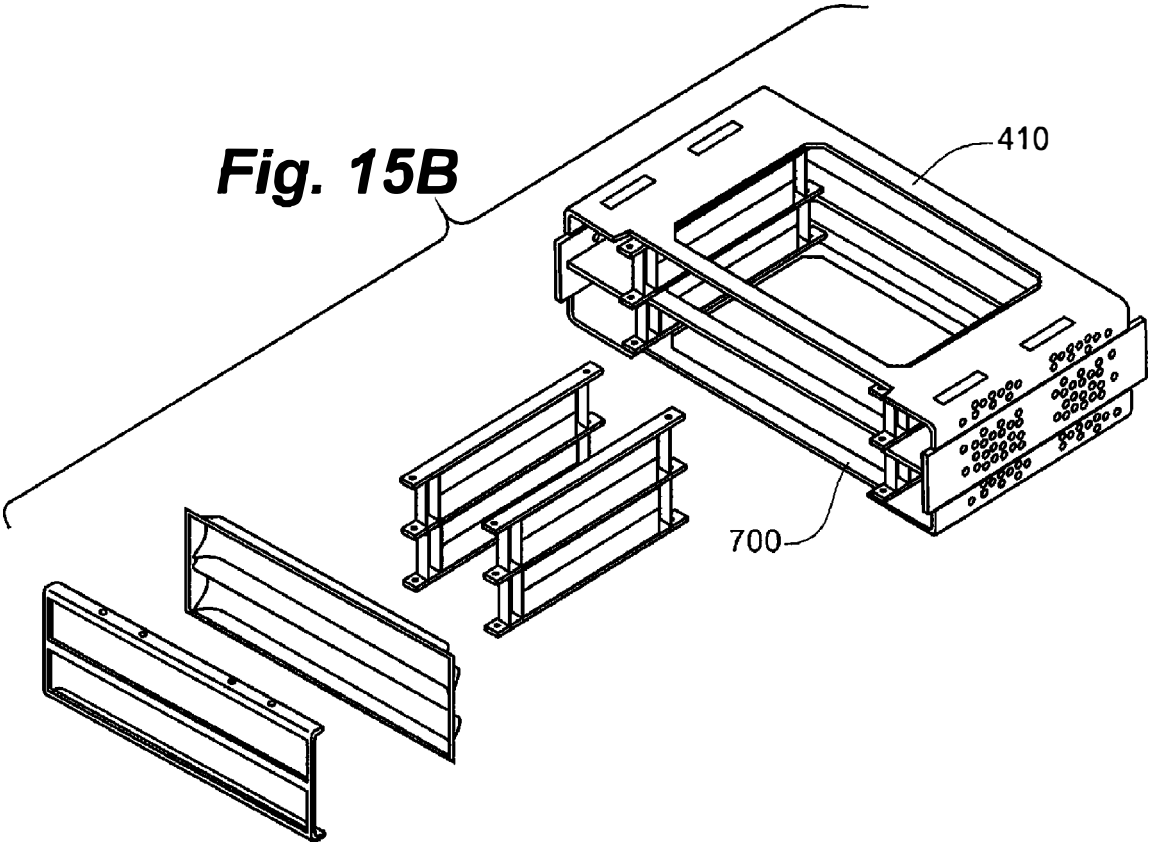

Fig. 15B

Exhibit 2016
Axion v. Agilent
IPR2024-01467

Fig. 15C

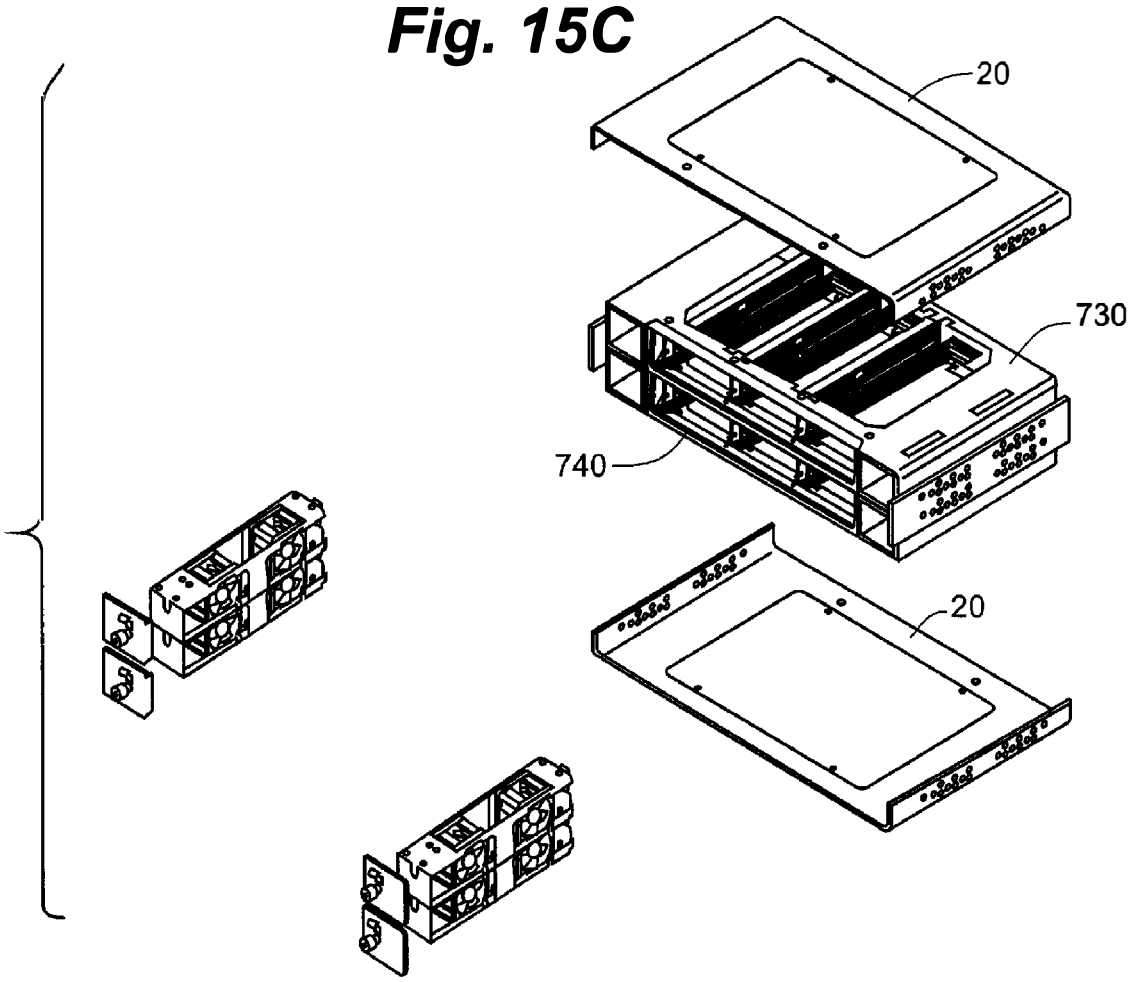

Fig. 15D

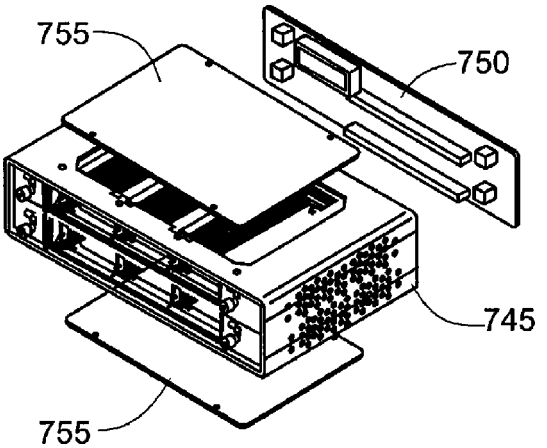

Exhibit 2016
Axion v. Agilent
IPR2024-01467

Fig. 16

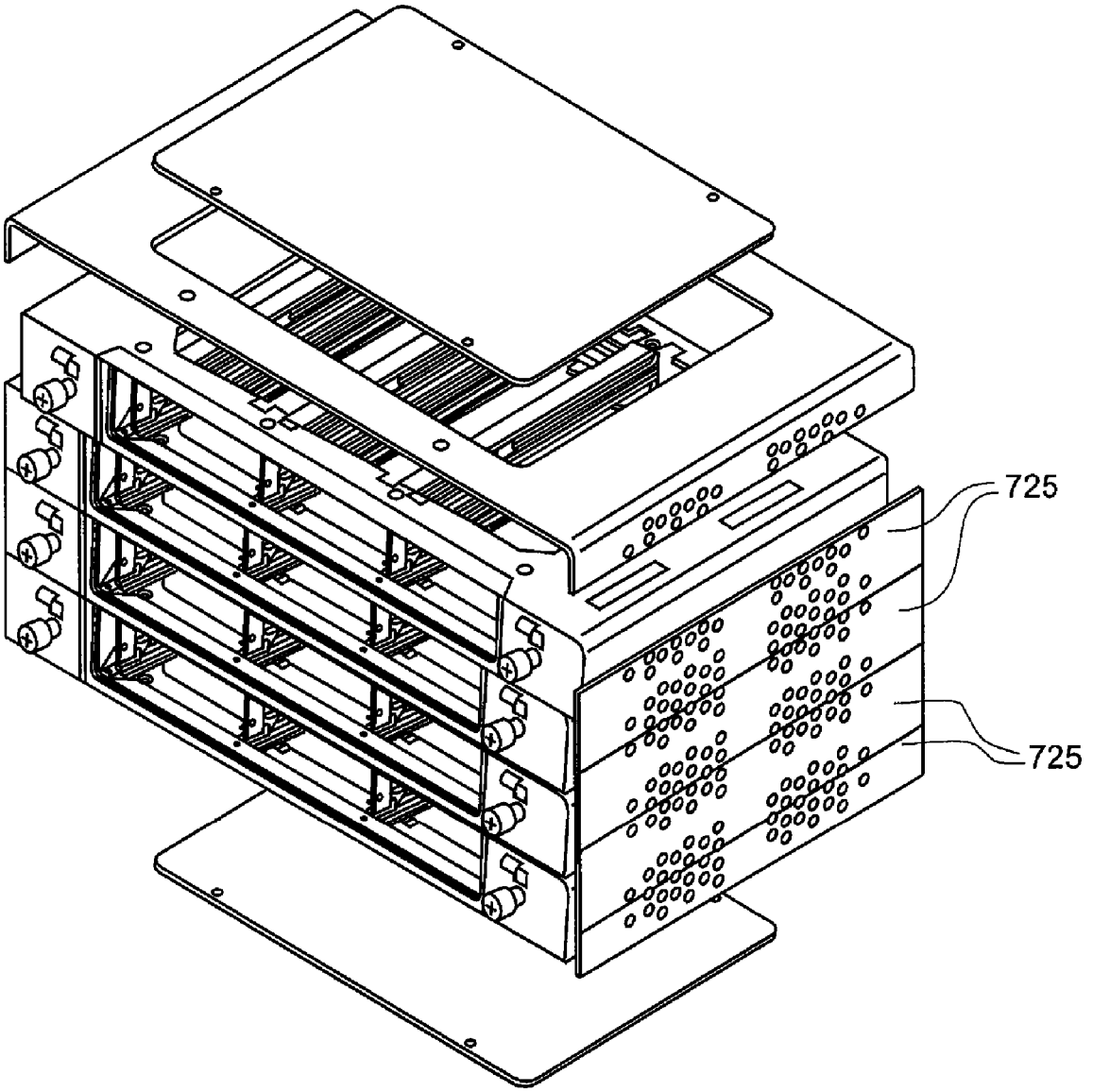

Exhibit 2016
Axion v. Agilent
IPR2024-01467

Fig. 17

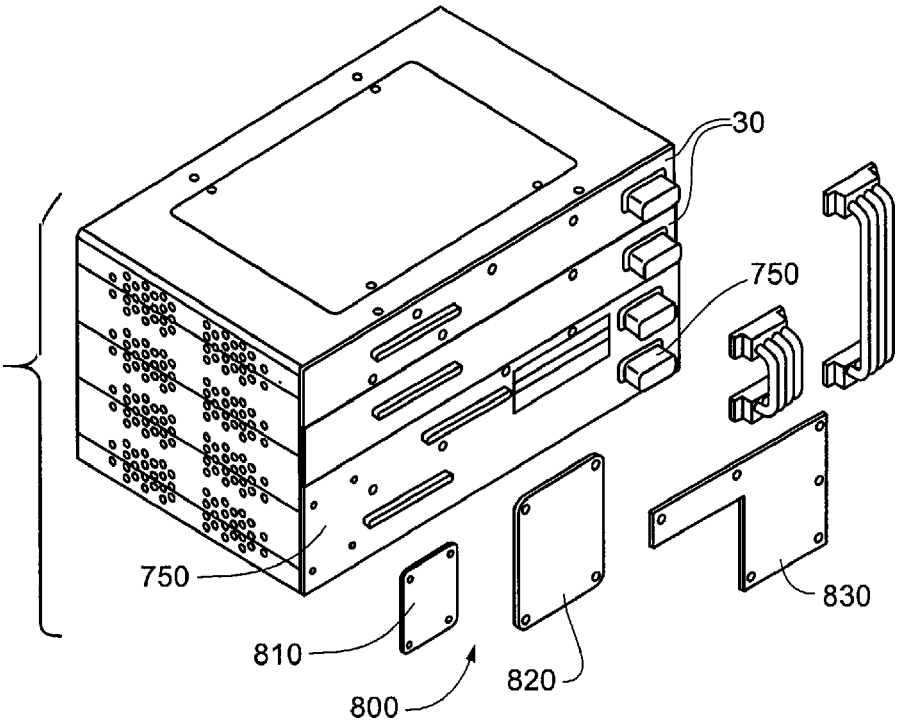

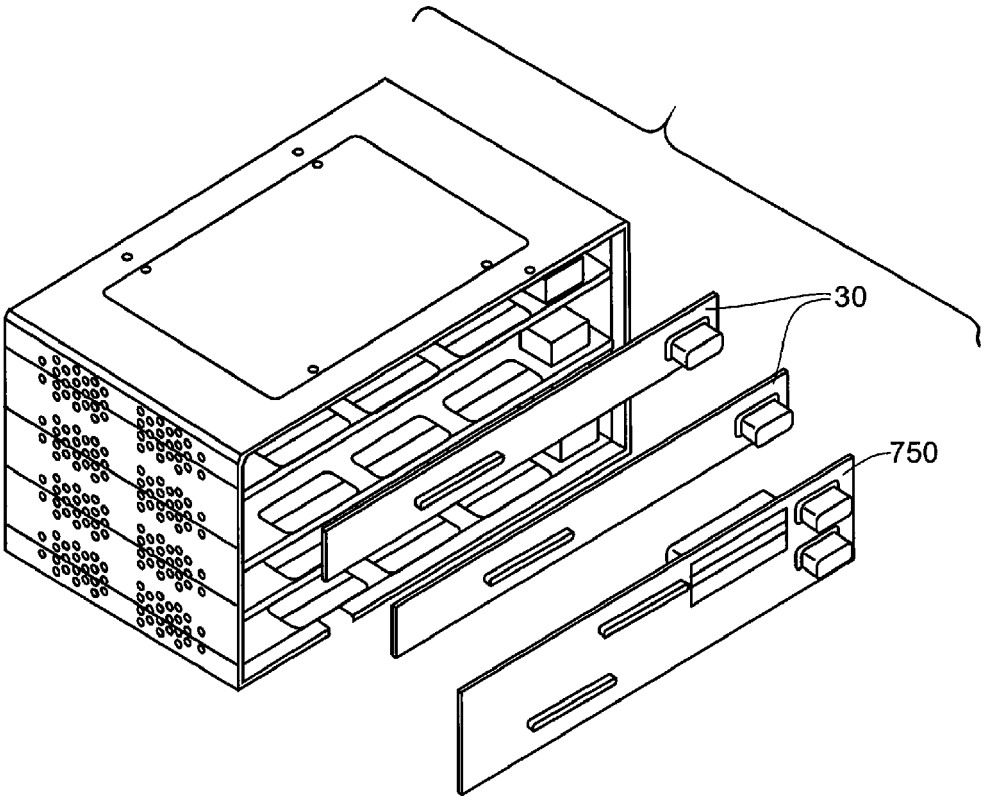

Exhibit 2016
Axion v. Agilent
IPR2024-01467

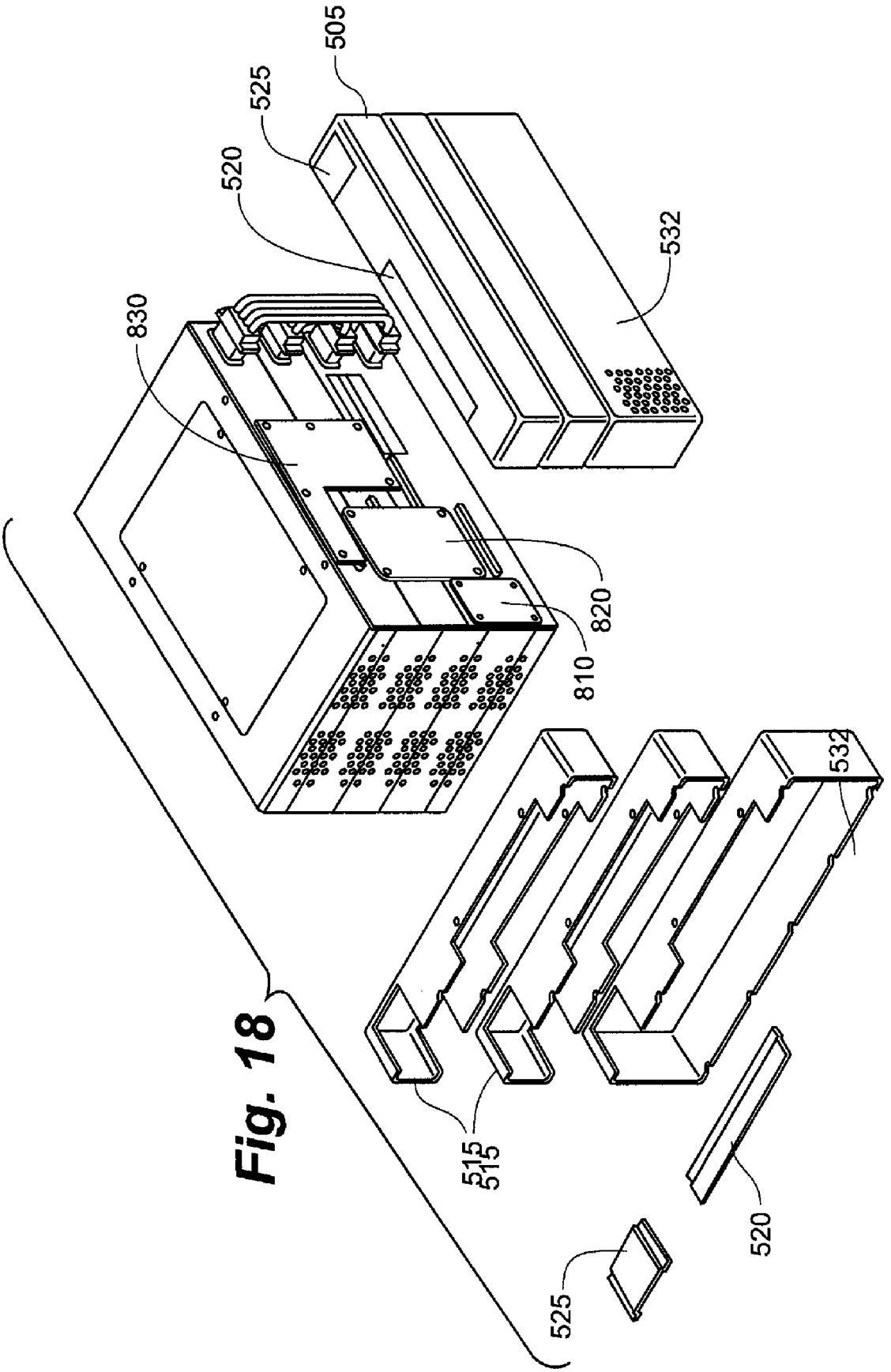

Fig. 18

Exhibit 2016
Axion v. Agilent
IPR2024-01467

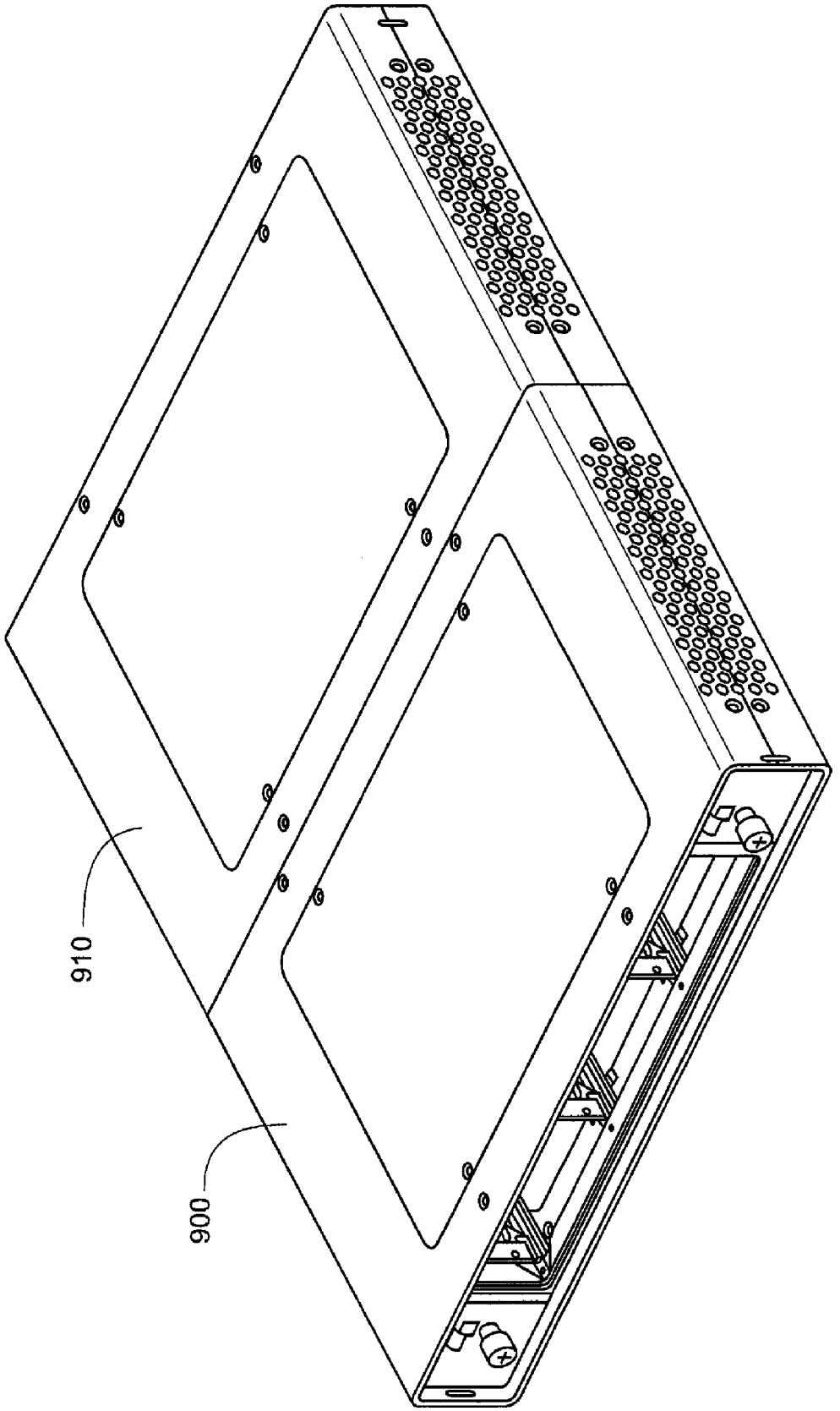

Fig. 19

Exhibit 2016
Axion v. Agilent
IPR2024-01467

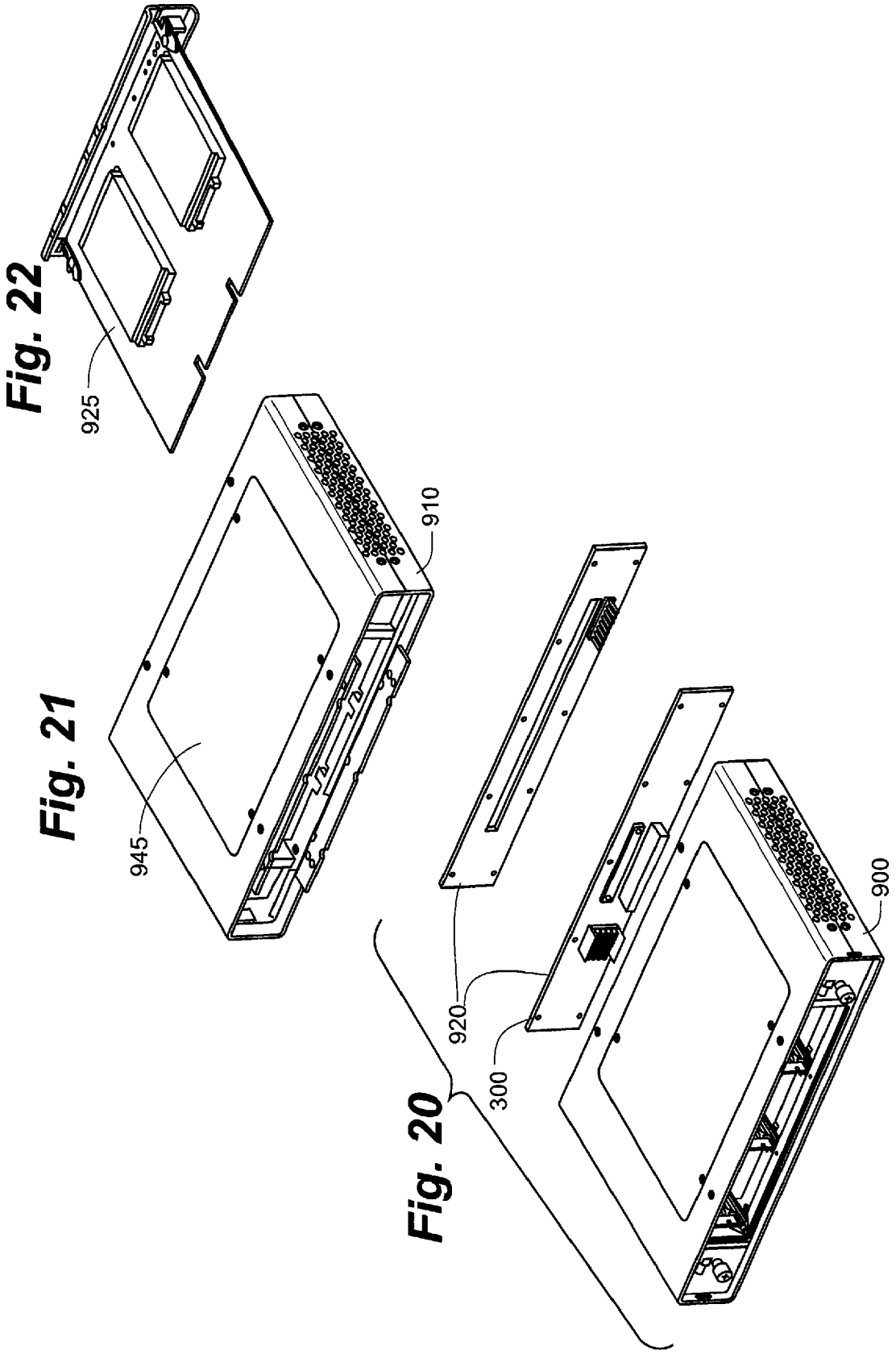

Fig. 22

Fig. 21

Fig. 20

Exhibit 2016
Axion v. Agilent
IPR2024-01467

Fig. 23

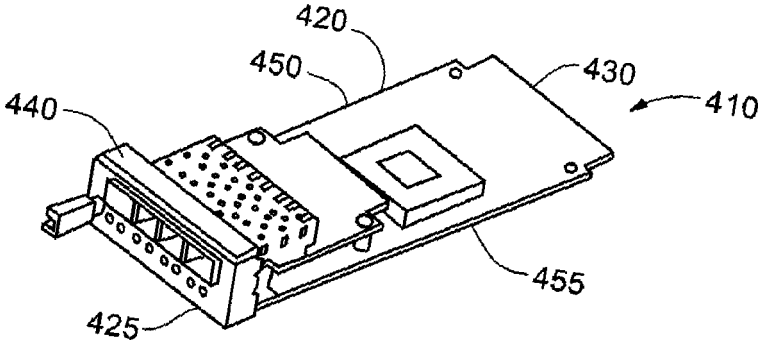

Fig. 24

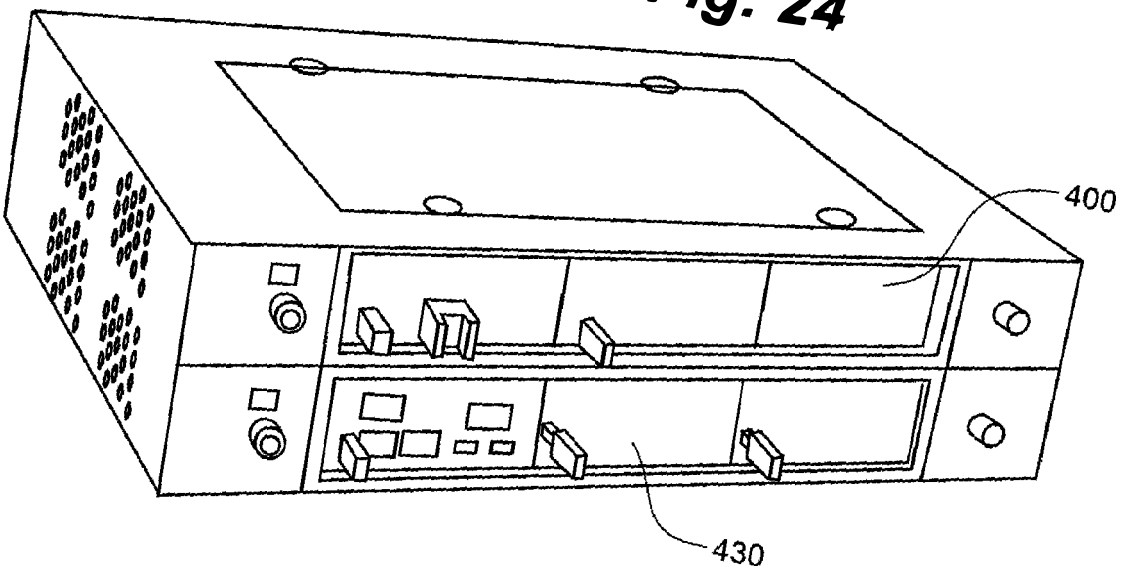

Exhibit 2016
Axion v. Agilent
IPR2024-01467

MODULAR CHASSIS PROVIDING SCALABLE MECHANICAL, ELECTRICAL AND ENVIRONMENTAL FUNCTIONALITY FOR MICROTCA AND ADVANCED TCA BOARDS

PRIORITY CLAIM

[0001] The present invention claims priority to U.S. Provisional Patent Application Ser. No. 60/743,761, entitled "Modular Chassis Providing Scalable Mechanical, Electrical and Environmental Functionality for MicroTCA Carrier Boards," filed Mar. 24, 2006, the entire disclosure of which is hereby incorporated by reference.

FIELD OF THE INVENTION

[0002] The present invention relates generally to telecommunications, networking and computer equipment and specifically, but not exclusively, to a modular chassis arrangement that is configurable into an interconnected structure providing scalable mechanical, electrical and environmental functionality for housing a multiplicity of AMC carrier boards, particularly Micro Telecom Computing Architecture (MicroTCA) and Advanced Telecom Computing Architecture (ATCA) carrier boards.

BACKGROUND OF THE INVENTION

[0003] There has been a widespread shift from the historic telecommunications business model which fostered low unit volume, relatively high price proprietary system architectures to standards-based solutions built using commercial off-the-shelf (COTS) technology. One of the business drivers for this shift is the need for flexibility to respond to a rapidly changing network infrastructure and the need to keep operating and capital expenditures low. Catalyzing this shift are standards based technologies that adhere to specifications defined by industry sponsored standards making bodies. For example, the Advanced Telecom Computing Architecture (or AdvancedTCA™ hereinafter "ATCA") based platform can be used by both, suppliers and end-users to construct ATCA standard-compliant solutions.

[0004] The ATCA specification is a series of industry standards that define scalable, standardized platform architecture to extend COTS to a broad spectrum of products from component vendors. ATCA compliant components and systems embody interoperable ATCA technology such as physical format, system management and software designed to deliver cost effective, reduced time-to-market, off-the-shelf solutions that can be incorporated into products ranging from high-availability, carrier-grade telecom, storage, and computing applications. ATCA is sponsored by the PCI (Personal Computer Interconnect)—Industrial Computer Manufacturers Group (PICMG❍), a major industry standards body.

[0005] The ATCA Base Specification, PIGMG 3.0 Revision 1.0, ratified in Dec. 30, 2002 (hereinafter "the ATCA specification"), defines an open electromechanical architecture of a modular platform that may be constructed from commercial off-the-shelf components. The electromechanical architecture encompasses the rack and shelf (chassis) mechanical form factors, power parameters, cooling characteristics, core backplane fabric interconnects and system management architecture to enable the construction of a modular platform that is capable of receiving a multiplicity of ATCA compliant modular plug-in circuit boards (ATCA carrier cards). The ATCA compliant modular plug-in circuit boards feature an open electromechanical architecture also defined by the ATCA specification. The ATCA base specification together with other associated specifications define multiple fabric connections and support multiple protocols for control and data plane communications including Ethernet, Fibre Channel, InfiniBand, StarFabric, PCI Express, and RapidIO❍.

[0006] The PICMG❍ Advanced Mezzanine Card (AMC) base specification, PIGMG AMC.0, Revision 1.0, published Jan. 3, 2005 (hereinafter referred to as the AMC.0 specification, the entire contents of which are incorporated herein by reference) adds versatility to the modularity provided by the ATCA specification. The AMC specification defines the base-level mechanical, management, power, thermal, interconnect (including I/O) and system management requirements for hot-swappable, field-replaceable, add-on mezzanine cards (or modules) which may be hosted by an ATCA or a proprietary carrier board. Each AMC Module is received into an AMC Connector, seated parallel to the host carrier card and configured for high-speed, packet-based serial communications between the AMC card and the carrier board.

[0007] There are six different form factors defined in the AMC specification which include two AMC module widths (W): the single width module (73.5 mm) and a double width module (148.5 mm); three heights (H) or thicknesses: compact (13.8 mm), mid-sized (18.96 mm) and full-sized (28.95 mm); and a single depth (D) (181.5 mm). The height (H) is measured in a direction normal to the major plane of the AMC card. The width (W) and height (H) dimensions lie along mutually perpendicular directions in a plane that is normal to the direction along which the depth (D) is measured. When the AMC module is mounted vertically, the width dimension is aligned vertically and the height or thickness dimension is aligned horizontally. The reverse is the case when the AMC module is mounted horizontally. Additionally, the AMC specification refers to three types of carrier board configurations—conventional, cutaway and hybrid.

[0008] The availability of AMC cards having a wide variety of form factors allows the cards to accommodate a rich mix of circuit elements and circuit topologies to support many different application architectures that can address the needs of diverse segments of the computer and telecommunications marketplace. The AMC architecture supports a number of transfer protocols with varying band widths as described in the subsidiary PICMG standard AMC3.0 for example. AMC cards extend the functionality of the ATCA carrier boards and permit multiple vendors to build technology solutions for transmission and switching equipment and allow these technology solutions to be used in multiple applications and in multiple vendor product lines. The ATCA standardization approach in general improves product reliability (allowing for industry standard hot swappable hardware and software, including power supplies and fans) and drives down prices-due in large part to greater economies of scale in manufacturing and less time spent on details standardized by ATCA (e.g., power, cooling, mechanical spacing and connectors issues).

[0009] Technology implementations based on the ATCA specification represent "big iron" solutions that are suited to

Exhibit 2016
Axion v. Agilent
IPR2024-01467

telephone company central offices with high density needs: i.e., switching systems and transmission cross connects. These chasses are too massive for remote/enterprise applications. Likewise, ATCA blades feature a form factor that makes them unsuitable for edge applications such as cellular base stations, wire-line fiber pedestals, workgroup routers, modular servers, SAN storage boxes, network hubs (Wi-Fi/Wi-MAX), military, aeronautical, and medical applications. In response, the members of PICMG have recently ratified the MicroTCA specification (MicroTCA.0 R1.0, Jul. 6, 2006) (hereinafter "the MicroTCA specification") which represents a culmination of effort that resulted in several earlier draft specifications such as, for instance, PICMG❍ MicroTCA.0 Draft 0.32, Apr. 15, 2005 et seq. The following discussion presents certain details regarding the structural and operational aspects of MicroTCA-standards based systems that are described in the publicly available short form specification derived from the PICMG❍ MTCA.0 Micro Telecommunications Computing Architecture (MicroTCA.0) specification. (MicroTCA and the μTCA are trademarks of PICMG. AdvancedTCA and AdvancedMC are registered trademarks of PICMG).

[0010] The MicroTCA specification utilizes the PICMG AMC form-factor and management infrastructure for mezzanine blades as set forth in the ATCA specification to define the standardized elements needed to implement a MicroTCA Shelf (or "Shelf" which is also known as the chassis), including power modules, cooling elements, connectors, interconnects, backplane, MicroTCA Carrier Hub (MCH) and the subrack. The Shelf may be configured to realize diverse small foot-print, low-cost, flexible, and scalable platforms comprised entirely of AMC modules and interoperable components and systems. The thrust of MicroTCA is the reuse of technology defined by the AMC standard so that an AMC card (or module) can be used with either an ATCA carrier board or a "MicroTCA Carrier".

[0011] The "MicroTCA Carrier" as the term is used in MicroTCA, refers to the elements of a MicroTCA Shelf defined in AMC.0 including, among others, cooling and power delivery elements, a backplane with clock, fabric, power and management interconnects, and centralized hardware management that collectively emulate the requirements of the ATCA carrier board and can nominally support up to 12 AMC modules. Each AMC module plugs directly into the MicroTCA backplane instead of an ATCA based carrier board. A MicroTCA system consists of at least one AMC card. Additionally, a MicroTCA system also consists of at least one MicroTCA-specific module not defined by the AMC.0 specification. For example, a MicroTCA system consists of at least one AMC card and at least one MicroTCA-specific AMC-sized card called a MicroTCA Carrier Hub (MCH). The MCH combines the control and management infrastructure and the interconnect fabric resources needed to support up to 12 AMC modules. The MCH also contains IPMI software for managing key chassis functions, as well as clocking AMC daughter cards for different applications. Another MicroTCA-specific component is the power module, which fits in the same form factor as an AMC card. Thus configured, the MicroTCA form factor targets communications equipment ranging from pole mounted devices to core routers and IP-gateways, radio base stations and switching centers.

[0012] The outer dimensions of a MicroTCA system are defined by the Shelf which is rack-mountable (or frame-mountable). The Shelf is the basic autonomous unit of a MicroTCA system. The rack-mountable Shelf may be divided by rack-mounted Cubes, free-standing Cubes or Pico subassemblies (alternatively enclosures) to be populated with AdvancedMC modules. A MicroTCA specification compliant Shelf is either the 19 in. Shelf as defined in IEC 60297 or the Metric Shelf as defined in IEC 60917. Height dimensions of Shelves are generally designed using increments of 1 U/SU to follow common equipment practice where 1 U=44.45 mm or 1.75 in.

[0013] By definition, the Shelf contains at least a portion of a MicroTCA "Subrack." A Subrack is a mechanical assembly that provides the structural support for Shelf elements such as the AMCs, the MicroTCA Carrier elements and the backplane. A Shelf element may be a board typically comprising of components mounted on a printed circuit, an electromechanical assembly such as a fan module or a mechanical component such as a filter. The Subrack serves to receive, locate and enclose the electronic components in relative alignment to each other within the Shelf or chassis. The Subrack is also equipped with the mounting holes, card guides, cable guides, mounting brackets, EMC/ESD control structures, handle interface, face plate mounting hardware, air-flow guiding means and associated features. The standard orientation of the Subrack is vertical. When oriented in the horizontal direction, the vertical dimensions are followed. In the vertical direction, Subracks are divided into subsections of Tiers. The minimum requirement is one Tier; the maximum may be 4 Tiers. In the horizontal direction, Subracks are divided into subsections of slots where a slot is defined as a union of a connector and a card guide and defines the position of one AMC, MCH, or Power Module (PM). A MicroTCA Subrack can contain multiple Slots. Full-Height Modules, Mid-Size Modules and Half-Height Modules may be mixed and arranged in any order, horizontally across the MicroTCA Subrack.

[0014] A MicroTCA shelf can be configured to accommodate a large number of AMCs combined in multiple Tiers to achieve a high system density. The basic MicroTCA shelf equipped with 12 AMC modules can provide an overall chassis capability of (12.5 Gbps/per AMC.0 card×12AMC.0 cards) 150 Gbps. The physical dimensions of the standard Shelf make it too large for certain applications such as, for instance, game boxes, personal computers, single board computers, SATA/SAS storage modules, and WiMAX modules that are designed for operation on mobile platforms. Furthermore, many applications may not need the capacity that the full complement of 12 AMC.0 cards can provide. To accommodate such situations, the MicroTCA standard provides for special MicroTCA Shelves such as the MicroTCA Cube Shelf and MicroTCA Pico Shelf that can be configured for space-constrained applications while providing the desired level of functionality by leveraging the compact size of the AMCs. Each of these mechanical infrastructures can accommodate different complements of AMCs depending upon the size of the AMC, MCH capacity, enclosure width, and enclosure height. Certain architectures, such as the Pico Shelf architecture, are not required to contain a standalone MCH or PM. Instead, connections can be made directly between the various AMC modules using the backplane or between the AMC modules and elements on the backplane.

Exhibit 2016
Axion v. Agilent
IPR2024-01467

[0015] The MicroTCA specification leaves many design details of the Subrack undefined. The Subrack essentially defines only the AMC.0, MCH, and Power Module interfaces and the dimensions which govern the interface of AdvancedMC Modules to the Subrack and Backplane. All other Shelf architecture (including, the Cube Shelf and the Pico Shelf) dimensions remain undefined. Likewise, Subrack materials and design details are left undefined. Similarly, a MicroTCA shelf design (including the Pico Shelf) may have to comply with thermal, acoustic, shock and vibration related functional specifications imposed by the MicroTCA standard. The specification does not, however, provide a reference mechanical design capable of meeting these requirements. It is thus possible to design a large number of systems that conform to the specification. For example, the MicroTCA standard supports six form-factors for the AMC cards. The largest form factor is the Full-Height, Double-Width (Double Full-Size) AMC which occupies a mechanical volume of 150 (W)×187.3 (D)×30.48 mm (H). However, this volume can be subdivided into some number of smaller AMCs that fit into an enclosure with a smaller foot-print.

[0016] It is also possible to design systems that conform to the specification but include non-compliant components and subsystems where the specification is silent thereby considerably extending the range of technology solutions covered by the scope of the specification. The MicroTCA specification prescribes that the MCH, PM, CU and AMCs be Field Replaceable Units (FRUs). As noted in the MicroTCA specification, a particularly challenging aspect of the mechanical design is an option to permit in-field re-configuration of numerous and various types of AMCs, used in multiple positions in a MicroTCA Shelf. (See, section 1.2.4.5 of the MicroTCA Specification).

[0017] It would be advantageous to provide a modular, scalable electronic enclosure that conforms to the MicroTCA specification, accommodates non-compliant architecture where not prohibited by the MicroTCA specification, permits in-filed re-configuration of the AMC modules in multiple positions in the MicroTCA Shelf, facilitates in-field reconfiguration of the shelf geometry without the need to relax the geometrical tolerances required by the MicroTCA specification and is sufficiently versatile to accommodate the requirements of an evolving specification.

SUMMARY OF THE INVENTION

[0018] In accordance with various embodiments of the present invention, an apparatus and system are provided to serve as a modular chassis arrangement for electronic modules that is configurable into a mechanically and electrically interconnected structure capable of delivering scalable mechanical, electrical and environmental functionality for a multiplicity of electronic modules. More specifically, the present invention serves as an enclosure or chassis for a complete standalone MicroTCA system comprising at least one AdvancedTCA and optionally one or more MicroTCA-specific modules configured into a fully compliant AMC and MicroTCA solution.

[0019] For purposes of the present invention, the term module (or board) refers to any MicroTCA module type, a non-MicroTCA unit, or even a printed circuit board on which electronic components and wiring are located. Examples of a module include the Cooling Unit (CU), Power Module (PM), MicroTCA Controller Hub (MCH), OEM Module, or AMC carrier board. In a related embodiment, at least one of the modules located within the enclosure is non-MicroTCA compliant.

[0020] In accordance with one embodiment of the present invention, a chassis serving as an enclosure for a standalone MicroTCA system is selectively configurable into a slot for use with non-MicroTCA and non-AMC modules of arbitrary width. The non-standard modules may be used either in conjunction with or independent of AdvancedTCA and MicroTCA specific modules.

[0021] In accordance with another embodiment of the present invention, a unit chassis having at least one standardized dimension and a backplane are provided where the unit chassis comprises a mechanically and electrically interconnected structure having the smallest form factor compliant with the MicroTCA standard but still capable of delivering scalable mechanical, electrical and environmental functionality to support at least one AdvancedTCA module. In this embodiment, the backplane can provide point-to-point traces between each AdvancedTCA module/card (or other electronic card) and the MCH, and between the AdvancedTCA module/card (or other electronic card) themselves.

[0022] In one embodiment, a unit chassis of a first form factor is adjustably reconfigurable to provide a slot density that can accept the maximum number of electronic modules each of which can be of a different second form factor. In a related embodiment, a first unit chassis and a second unit chassis of the same form factor as the first unit chassis are coupled back-to-back with a shared mid-plane that serves as the backplane of each of the first and second unit chasses. The mid-plane may include printed circuitry operable to provide data communications between a plurality of modules housed within the first unit chassis and at least one module housed within the second unit chassis.

[0023] One embodiment of the present invention includes at least one removable access panel provided on the unit chassis. The removable access panel provides access to the enclosure that is formed by at least a portion of the unit chassis and to the components on the various AMC and other cards supported within the enclosure while maintaining structural integrity of the unit chassis. According to some embodiments, removal of the access panel enables in-situ operations such as inspection, probing and testing of selected components housed within the enclosure of the unit chassis without interfering with the operation of the MicroTCA system or the structural integrity of the unit chassis. In one embodiment, the access panel is adapted to cover less than a surface area of a major side of the unit chassis and be removed from the unit chassis such that a skeletal framework of the unit chassis is unaffected by removal of the access panel. In a related embodiment, the access panel includes a pair of panels, each adapted to cover one of a corresponding top and bottom major surface of the unit chassis. This embodiment enables more robust access to the entire array of modules and circuitry from more than a single direction for purposes of debugging and testing while the system is in operation.

[0024] Another embodiment of the present invention provides a scalable, stacked enclosure wherein at least two unit

Exhibit 2016
Axion v. Agilent
IPR2024-01467

chasses, each of which is associated with at least one common standardized dimension, are configured to form a plurality of tiers stacked with their common standardized dimensions disposed in parallel alignment relative to each other in the vertical plane. Each tier has opposite front and rear faces with respect to the horizontal dimension, and optionally, each front face is oriented in the same direction with respect to the scalable enclosure. Each unit chassis comprising a tier can support at least one of an AdvancedTCA, MicroTCA-Specific or non-Standard printed circuit board card assemblies. In one embodiment, the stacked enclosure is equipped with a solitary MCH housed in a base unit chassis that provides the specified IPMI management, networking, and clock infrastructure to the staked enclosure. The modular nature of each such unit chassis allows for incremental addition, elimination or swapping out of one or more of the unit chassis comprising the MicroTCA system without disrupting the operation of other unit chasses in the system.

[0025] In one embodiment of the present invention, the scalable, stacked enclosure is equipped with at least one passive interconnect circuit board that provides communication lanes for transferring communications to and from a first backplane associated with a unit chassis that houses the MCH module and a second backplane associated with one or more the remaining unit chasses. In a related aspect of this embodiment, there is provided at least one active interconnect that replaces the passive interconnect and serves to condition the communication signal transferred between the first and second backplanes against signal degradation occurring during transmission along a signal path. In a further related aspect of this embodiment, both a passive and an active interconnection can be provided among multiple chassis in a stackable or back-to-back arrangement of unit chasses in the system. In a related aspect of this embodiment either of a passive or active interconnection are provided by modular backplane extensions that include connectors on one or more edges of the modular backplane extensions such that multiple extensions may be connected together in a generally planar arrangement to form the backplane for a scalable, stacked arrangement of chasses.

[0026] In one embodiment of the present invention, the scalable, stacked enclosure advantageously provides a single, monolithic backplane that is coplanar with and substitutes for the backplanes of each of the constituent modular unit chasses of the stack. According to another aspect of the present invention, the monolithic backplane allows the use of a single, planar, power management and distribution printed circuit board (PCB) and a single, planar signal interconnect PCB to provide an integrated power and signal management system for the entire stack of unit chasses.

[0027] According to still another embodiment of the present invention, the modular system is directed to an expandable, stackable MicroTCA specification based modularized enclosures for holding modular telecom and non-telecom devices in a vertical tower configuration. In one aspect of this embodiment, there are provided three different structural units each of which represents a basic Pico-Shelf compliant with the MicroTCA specification. One of the basic units is configured to be used as a base unit. A second basic unit is configured to be used as a cap unit or apical unit. One or more third units are configured to be sandwiched between the apical and base units or disposed above or below another intermediate unit. The stacking of the units enables the backplanes of each of the constituent modular units of the stack to be coplanar to allow the use of a single, planar power management and distribution printed circuit board (PCB) and a single, planar signal interconnect PCB for providing an integrated power and signal management system spanning the entire stack.

[0028] One aspect of the present invention advantageously provides component slots to house a plurality of cooling units for generating a standards-prescribed volumetric air-flow within the enclosure alone a standards-prescribed direction. In one embodiment, the cooling units are identical in form and function and are designed as field replacement units to provide a cost-effective cooling solution. The cooling units may be arranged in a push-pull configuration with a first cooling unit proximate an inlet vent operative to pull air into the enclosure and a second paired cooling unit proximate an exhaust vent operative to push the air out of the enclosure so as to deliver the standards-defined cooling performance in a compact, cost-effective package that maximizes the volume of the enclosure available for housing modules. In a related embodiment, an enclosure having a open design wherein the structural elements interior to the enclosure are equipped with apertures and vents sized and located is provided to allow the volumetric air flow generated by the cooling units to flow relatively unimpeded along the standards-prescribed direction. In yet another embodiment, filler modules that have the same form factor as an AMC card are bereft of any circuitry are provided. When a slot in a unit chassis or a stacked enclosure is unpopulated, a filler module is inserted into the slot to prevent the air-flow from taking the path of least resistance and exiting prematurely from the enclosure instead of flowing along the standards-prescribed direction within the enclosure. In another embodiment, the leveraging of unused cooling capacity by providing a filler module that is configured to obstruct air flow through the standards-prescribed pathway within a tier and divert the air flow along an alternate pathway into an adjacent tier enables an increase in the total volumetric flow rate above the as-designed point over a selected portion of the stacked enclosure. In another embodiment, a replaceable filter is positioned adjacent a cooling unit located proximate an inlet side. The cooling unit draws in air from the ambient through vents provided on the inlet side of the enclosure.

[0029] In one embodiment, a static charge dissipater for each module slot in the enclosure. The static charge dissipater is in the form of an Electro Static Discharge (ESD) clip positioned on a card guide (i.e., board guide) and connected to shelf ground by a conductive path extending along a structural element forming the enclosure. The ESD clip contacts the printed circuit board (PCB) edge as the AMC module is inserted into the enclosure and provides a path for ESD energy on the PCB to be discharged into the shelf.

[0030] Other features and advantages of the invention will become apparent to one skilled in the art upon review of the following detailed description, claims and drawings in which like numerals are used to designate like features.

BRIEF DESCRIPTION OF THE DRAWINGS

[0031] The invention may be more completely understood in consideration of the following detailed description of

Exhibit 2016
Axion v. Agilent
IPR2024-01467

various embodiments of the invention in connection with the accompanying drawings, in which:

[0032] FIG. **1** is a perspective view of an exemplary modular chassis of the present invention.

[0033] FIG. **2** is the exemplary modular chassis of FIG. **1** with the covers removed.

[0034] FIG. **3** is a partial exploded view of the illustration of FIG. **2** depicting the skeleton frame, the face plate, and a first electromechanical assembly according to an exemplary embodiment of the present invention.

[0035] FIG. **4** is alternate partial exploded view of the illustration of FIG. **1** illustrating the skeleton frame, the covers, the face plate and a second electromechanical assembly according to the exemplary embodiment illustrated in FIG. **3**.

[0036] FIG. **5** depicts the front, side and top views of an embodiment of the present invention.

[0037] FIG. **6** is an exploded view of the modular chassis of an exemplary embodiment according to the present invention.

[0038] FIGS. **7**A, **7**B, **7**C, **7**D and **7**E are the top view, right side view, left side view, front view and rear view respectively of an exemplary inner cover of the skeleton frame according to the exemplary embodiment of the present invention.

[0039] FIG. **7**F is an isometric view of an exemplary inner cover according to one embodiment of the present invention.

[0040] FIGS. **8**A, **8**B, **8**C, and **8**D are the top view, the right side view, the left side view and the front view respectively of an exemplary strut of the present invention.

[0041] FIG. **9** is a locally enlarged view of an exemplary ESD clip according to one exemplary embodiment of the present invention.

[0042] FIGS. **10**A, **10**B, **10**C, and **10**D are the top view, front view, side view and perspective view respectively of an exemplary outer cover of the chassis according to an embodiment of the present invention.

[0043] FIGS. **11**A, **11**B and **11**C are the front view, the top view and the side view respectively of an exemplary faceplate according to an embodiment of the present invention.

[0044] FIG. **12** is a perspective view of an electrostatic discharge (ESD) backer according to an exemplary embodiment of the present invention.

[0045] FIGS. **13**A, **13**B, **13**C, and **13**D are respectively a perspective view of a rear cover, a first removable rear cover panel, a second removable rear cover panel for a single tier chassis and a rear cover for a two tier (2U) chassis respectively according to an exemplary embodiment of the present invention.

[0046] FIG. **14** is an exploded isometric view of a stacked modular unit according to an exemplary embodiment of the present invention FIGS. **15**A-**15**D depict an exemplary process of assembling the stacked modular unit of FIG. **14**.

[0047] FIG. **16** is an exemplary stacked modular unit that is 4 U tall.

[0048] FIGS. **17** and **18** illustrate backplane topologies for stacked modular units according to the present invention.

[0049] FIGS. **19**-**22** illustrate a rear transition module configuration according to one exemplary embodiment of the present invention.

[0050] FIG. **23** illustrates an AMC module

[0051] FIG. **24** illustrates an exemplary 2 U modular unit according to an embodiment of the present invention.

[0052] While the invention is amenable to various modifications and alternative forms, specifics thereof have been shown by way of example in the drawings and will be described in detail. It should be understood, however, that the intention is not to limit the invention to the particular embodiments described. On the contrary, the intention is to cover all modifications, equivalents, and alternatives falling within the spirit and scope of the invention as defined by the appended claims.

DETAILED DESCRIPTION OF THE PREFERRED EMBODIMENTS

[0053] Before the embodiments of the invention are explained in detail, it is to be understood that the invention is not limited in its application to the details of construction and the arrangements of the components set forth in the following description or illustrated in the drawings. The invention is capable of other embodiments and of being practiced or being carried out in various ways. Also, it is understood that the phraseology and terminology used herein are for the purpose of description and should not be regarded as limiting. The use herein of "including" and "comprising" and variations thereof is meant to encompass the items listed thereafter and equivalents thereof, as well as additional items and equivalents thereof. Furthermore, the term "connected" is used herein to denote a direct physical and/or mechanical connection between elements. The terms "coupled,""operably coupled," or "operably connected," as used herein signify an indirect connection between elements.

[0054] FIGS. **1** and **2** are perspective views of a of modular chassis **10** providing scalable mechanical, electrical and environmental functionality for AMC, MicroTCA-specific and non-MicroTCA boards according to one embodiment of the invention. FIGS. **3** and **4** are partial exploded views of the invention illustrated in FIGS. **1** and **2** and FIG. **5** is a diagrammatic representation of the front, top and side views of the invention illustrated in FIGS. **1**-**4**. The chassis **10** (alternatively "enclosure,""box,""pico-box") generally includes a skeleton frame **15**, covers **20**, a face plate **25** and electromechanical assembly **30** mounted onto the chassis, which collectively provide the scalable mechanical, electrical and environmental functionality for AMC boards according to the present invention. In one embodiment, the chassis **10** is configured to receive at least one AdvancedTCA board, one or more MicroTCA specific modules such as a Power Module (PM), a MicroTCA Carrier Hub (MCH), one or more Cooling Units (CU) (i.e., a first example of a electromechanical assembly **30** of the present invention) and optionally non-MicroTCA specific modules all of which may be operably connected to a backplane (i.e., a second example of an electromechanical assembly **30** of the present invention) as will be described in the following sections.

Exhibit 2016
Axion v. Agilent
IPR2024-01467

[0055] The skeleton frame **15** will be described in more detail in with reference to FIGS. **3**, **6**, **7**, and **8**. FIG. **6** depicts an exploded view of some of the major components of one embodiment of chassis **10** according to the present invention. FIGS. **7**A, **7**B, **7**C, **7**D and **7**E are the top view, right side view, left side view, front view and rear view respectively of an exemplary inner cover of the skeleton frame according to the exemplary embodiment of the present invention. As illustrated in FIG. **6**, skeleton frame **15** preferably has a generally overall rectangular shape with a low profile and comprises an inner cover **50** removably coupled to a strut **55** by at least one fastener **60** to form an interior chamber **65** to house the AMC, MicroTCA specific and optionally non-standard cards with one or more fasteners **106**, such as for instance, a screw (not illustrated) though, in other embodiments, the inner cover **50** and strut **55** can be secured by other appropriate securing methods. Inner cover **50** is generally rectangular sheet-like or plate-like structure with a top surface **70** and an opposing bottom surface **75** extending between a first pair of opposed substantially parallel edges **80**, **85** and a second pair of opposed substantially parallel edges **90**, **95** as best illustrated in FIGS. **6** and **7**.

[0056] In some embodiments of the present invention, edges **80**, **85** are substantially perpendicular to edges **90**, **95**. Extending outwardly from each edge **80**, **85** and substantially perpendicular to the top surface **70** are one or more first tabs **100**. Inner cover **50** includes a groove **105** where a portion of the surface **70** is bent away from the top surface **70** towards the bottom surface **75** to project from the bottom surface **75** in the form of a guide tab **110**. Guide tab **110** extends substantially parallel and adjacent to edges **80**, **85** and is coplanar with tabs **100** as may be seen in FIGS. **6** and **7**. Guide tab **110** serves to guide and locate a filter assembly within the chassis **10** as will be explained. Inner cover **50** is provided with a first set of apertures **115** through which fasteners can be inserted. Each tab **100** also includes a structure defining at least one hole **120** for receiving a fastener. The hole **120** can be a through hole, a threaded hole, a blind hole or other construction to accommodate fasteners such as for instance, a screw, a nut and bolt, a rivet or other fasteners without falling outside the scope of the invention. To access the interior chamber **65**, a central portion of the inner cover **50** is formed as an opening **125** defined by a rim **130** and having a first area extent **135**.

[0057] In some embodiment of the present invention, structural features on inner cover **50**, such as the size, number and location of first tabs **100**, groove **105**, guide tab **110**, apertures **115**, hole **120**, opening **125** and rim **130** are symmetric about a plane perpendicular to the top surface **70** (and bottom surface **75**) and parallel to edges **90**, **95** and a plane perpendicular to the top surface **70** and parallel to edges **80**, **85**. Edge **80** (**85**) is provided with a plurality of attachment tabs **140** that include apertures **145**. Attachment tabs **140** extend perpendicular to bottom surface and away from the top surface provides a point of attachment for locating and securing backplane **30** to chassis **10** as may be understood from the illustration of FIG. **4**. Inner cover **50** can be made of any suitable material such as aluminum, steel, or other materials using a process such as metal forming, drawing or other suitable processes well known in the art. It is understood that the scope of the present invention is not limited by either the materials of construction or mode of fabrication of the constituent components of the chassis.

[0058] Strut **55** will be described with reference to FIGS. **3**, **6** and **8**. Strut **55** is a longitudinal member of length **155** (not illustrated) extending between a beam-front end **160** and beam-rear end **165**. Strut **55** has a I-shaped cross-section **170** extending between a strut top surface **175** and an opposed strut bottom surface **180** of height **185** (not illustrated) to form a card guide assembly best depicted in the illustration of FIGS. **8**B and **8**D. I-shaped cross-section **170** has a width **190** (not illustrated) transverse to height **185**. Width **190** has a left-side lateral surface **195** opposite a right-side lateral surface **200** best seen in the illustration of FIG. **8**D. Lateral surfaces **190** and **195** are provided with first opposed longitudinal card-guides **205** and second opposed longitudinal card-guides **210**, extending along the length **155**, disposed at a first height **215** and second height **220** respectively from the bottom surface **180** such that card-guides **210** are proximate the strut top surface **175**. Height **185** is determinative of the total height of the chassis **10** and a maximum height of AMC (or other module) **225** that may be accommodated within the chassis **10**. Height **215** of opposed card guides **205** is selected to receive and guide the AMC having a height dimension that is less than or equal to the maximum height as defined by the specification of, for instance, the AdvancedMC.0, MicroTCA or other related standard. I-shaped cross-section **170** has a structure defining a plurality of cross-section apertures **230** for placing the lateral surfaces **190** and **195** in fluid communication with each other. Top and bottom surfaces **175** and **180** are provided with attachment-apertures **235** sized and located to allow strut **55** to be mated to inner cover **50** using a fastener or other suitable fastening method to form the skeleton frame **15** as will be described in the following sections.

[0059] Referring again to FIG. **3** there is shown a partial assembly of the skeleton frame **15** according to one embodiment of the present invention. Bottom surfaces **180** of a plurality of struts **55** are fastened to the bottom surface **75** of a first inner cover **50** so that the length **155** of struts **55** is disposed parallel to the edges **90**, **95** of the inner cover **50**. Struts **55** are disposed spaced apart to define card slot **250** between adjacent struts **55** to accommodate AMC (or other module) **225**. Bottom surface **75** of a second inner cover **50** is fastened to the top surface **175** of struts **55** so that corresponding first tabs **100** of the first and second inner covers **50** are adjacent to each other with corresponding holes **120** on respective first tabs **100** in substantial alignment for accepting fasteners therethrough to releasably mate the first and second inner covers **50** to form the skeletal frame **15** as depicted, for example, in the illustration of FIG. **3**.

[0060] As will be appreciated, the terms "top,""bottom, ""side," and "rear", "right side", "left side", "exterior" and "interior" are exemplary only and are not intended to limit the orientation of the enclosure housing or the electronic control enclosure unless specifically referenced in a context which so indicates.

[0061] As illustrated in FIGS. **4** and **10**, in one embodiment the chassis **10** includes a generally C-shaped cover **20** having a generally rectangular sheet-like or plate-like structure with a cover-top surface **270** and an opposing cover-

Exhibit 2016
Axion v. Agilent
IPR2024-01467

bottom surface **275** extending between a first pair of opposed substantially parallel edges **280**, **285** and a second pair of opposed substantially parallel edges **290**, **295**. Projecting downwardly from edges **290** and **295** are side walls **300** and **305** respectively. Each side wall **300**, **305** has disposed on it a plurality of perforations **310** sized and shaped to allow air flow therethrough. Cover **20** is provided with a plurality of cover-apertures **315** through which fasteners can be inserted. To facilitate access to the interior chamber **65**, a central portion of the cover **20** is formed as a cover opening **325** defined by a cover rim **330** and having a second area extent **335** (not illustrated). Cover opening **325** has a shape that is substantially identical to the shape of opening **125** on inner cover **50** but the area **335** is proportionally larger than area **235**. Cover **20**, including the structural features associated with cover **20**, is symmetric about a plane perpendicular to the cover-top surface **270** and parallel to edges **280**, **285** as well as about a plane perpendicular to the cover-top surface **270** and parallel to edges **290**, **295**.

[**0062**] In one embodiment of the present invention, cover **20** is placed over inner cover **50** of the skeleton frame **15** with edges **280**, **285**, **290** and **295** of cover **20** being in substantial parallel alignment with edges **80**, **85**, **90** and **95** of inner cover **50**. Cover **20** is shaped and dimensioned such that cover-bottom surface **27** substantially conforms to a portion of the inner cover **50** such that at least one cover-aperture **315** is in substantial alignment with hole **120** on tab **100** so that a fastener can be inserted through each corresponding cover aperture **315** and hole **120** to releaseably fasten cover **20** to inner cover **50** of skeleton frame **15** as best illustrated in FIG. **5**. In this configuration, cover opening **325** is concentrically located with opening **125** with cover rim **330** disposed around and outward of rim **130** so as to form a ledge **345** extending between the two rims. Access panel **350**, depicted in FIG. **4**, is a flat sheet-like structure with a peripheral edge **360** that is shaped and dimensioned to substantially conform to the rim **330**. In one embodiment, access panel **350** may be supported on the ledge **345** extending between the cover-rim **330** and rim **130** on inner cover **50** so that peripheral edge **360** is located adjacent to cover rim **330** and the cover opening **325** is substantially covered. Access panel **350** is removably fastened to the inner cover **50** using fasteners inserted through access panel apertures **365** on access panel **350** that align with suitably disposed apertures **115** on inner cover **50** when access panel **350** is located on ledge **345**. In this configuration, access panel **350** encloses interior chamber **65** housing AMC and other modules according to the present invention. Upon removal of access panel **350**, access is obtained to the electrical components inside the interior chamber **65** for testing and probing the components on an AMC or other modules housed within the interior chamber **65** but without interrupting the operation of the other modules.

[**0063**] As depicted in FIGS. **1**, **2**, **3** and **5**, skeleton frame **15**, including the inner covers **50** and struts **55**, the covers **20**, and backplane **30** define an enclosure with card slots **400** suitable for receiving AMC cards and other modules **410** exemplified in FIG. **23**. A typical AMC module **410** comprises a printed circuit board **420** with a front end **425** and a rear end **430**. Rear end **430** has a structure suitable for mating with an AMC connector **32** on backplane **30** attached to inner cover **30** on edge **85** as seen in FIG. **4** for instance. Front end **425** of AMC module **410** includes a face plate **440** of a standard specified height such as for example, half-height, full-height. AMC module **410** includes side parallel edges **450**, **455**. In operation, AMC card **410** is inserted into a card slot **400** so that edges **450** and **455** are received within card guide slots **205** (**210**) and progressively inserted along length **155** of chassis **10** until the rear end **430** is physically mated with AMC connector **32**.

[**0064**] FIGS. **2-4** depict a plurality of AMC (and optionally non-AMC modules) in a fully inserted position within chassis **10**. Strut **55** includes a electro static discharge (ESD) clip **475** that wipes the edge **450** (**455**) of AMC card **410** as it is progressively slid into card guide slot **205**(**210**) as seen in FIGS. **8** and **9**. ESD clip provides a path to chassis ground to discharge and prevent buildup of electro static discharge. A faceplate **25** illustrated in FIG. **11** is mounted in the opening of skeleton frame **15** defined between edges **80** of inner cover **50**. Faceplate **25** has top **26**, bottom **27** and side walls **28** that provide a seal between the chassis **10** and the faceplate **440** of AMC card **410**. To shield the components that are housed in the interior chamber **65** from electrical-magnetic interference, an ESD backer plate **29** illustrated in FIG. **12** may be attached to the inner surfaces of the top **26**, bottom **27**, side **28**, walls of faceplate **25**. Additionally, a gasket coated with an EMI shielding material can be attached to each surface of the ESD backer plate. FIGS. **6** and **13** illustrate a back-cover **515** that encloses the region of the chassis **10** where the backplane is attached to the chassis. Back-cover **515** includes coverlets **520** and **525** that may be removed when interconnects (not illustrated) have to extend outside the enclosure formed by the chassis **10**.

[**0065**] In addition to housing the AMC module **410**, the chassis **10** of one embodiment of the present invention provides dual includes bays for cooling units **600** best illustrated with reference to FIG. **3**. In one exemplary embodiment, the cooling unit comprises a pair of identical fan modules **610**. Each fan module is a longitudinal chamber housing at least one fan **620**. One of the fans is located in a bay proximate edge **90** and serves to aspirate air into the interior chamber **65** and force it along a path substantially parallel to edges **80** (**85**) towards the other fan **620** which sucks the air and blows it out of the interior chamber **65**. A filter **630** is interposed between the fan proximate edge **90** (alternatively "inlet side"). Filter **630** is guided and located within the interior chamber **65** by guide tabs **110** illustrated in FIG. **3**. The use of features such as tab **100** on the inner cover **50** and cross-section apertures **230** on struts **55**, the chassis of the present invention presents a relatively unobstructed flow path for air along the direction of flow i.e. parallel to the edges **80**, **85**.

[**0066**] As shown in FIGS. **14** and **24**, in some embodiment all of the modules received within card slots **400** are interchangeable. In particular, chassis unit **10** can be considered a base unit or unit chassis. A plurality of unit chasses may be stacked vertically, as shown in FIG. **24** for instance, to obtain a scaled, composite unit which is capable of housing diverse AMC and other modules to deliver enhanced capacity and functionality as will be described next.

[**0067**] Referring now to FIGS. **14** thru **18**, FIG. **14** depicts an exploded view of a stacked configuration comprising a first unit chassis **700** and a second unit chassis **710** each of height 1 U stacked vertically to obtain a composite unit of

Exhibit 2016
Axion v. Agilent
IPR2024-01467

height 2U illustrated in FIG. **24**. In one embodiment, the electromechanical assembly **30** comprising the backplane **30** of each individual unit chassis **700** (**710**) is replaced by a second backplane **715** that is 2 U tall and is equipped with the connectors, fabric interconnects and other features needed to provide backplane functionality to each of the first and second unit chasses **700** (**710**).

[**0068**] A method to assemble the stacked modular chasses of the present invention will now be described with reference to FIGS. **15**A thru **15**D. As shown in FIG. **5**A, step **1** comprises assembling first and second unit chassis **700** and **710** respectively as disclosed in the preceding sections of this disclosure. It is understood that the first step is to assemble the skeleton frames **15** of each of the unit chasses **700** and **710**. If the chasses **700** and **710** already exist, one of the covers **20** of each chassis **700** and **710** is removed and the chasses stacked vertically such that the inner cover **50** of first chassis **700** and second chassis **710** are directly in physical contact as shown in FIGS. **15**A and **15**B. An expander plate **725** may be used to fasten each of the chassis **700** and **710** to each other as shown in FIG. **15**B. Covers **20** are positioned and fastened to a top side **730** of unit chassis **710** and bottom side **740** of chassis **700** to form a partial composite structure **745** as shown in FIG. **15**D. A backplane **750** of height **2**U is attached to a rear end of the partial composite structure **745**. Access panels **755** may be attached to covers **20** fastened to the top side **730** and bottom side **740** to complete the assembly.

[**0069**] Referring now to FIG. **16**, there is shown a staked module that is 4 U in height. The 4 U module is constructed in the manner described in the immediately preceding section but instead of stacking two chasses, four unit chassis are stacked vertically and three expander plates **725** are used to attach the chasses to each other instead of a single expander plate **725**. In an alternate embodiment, the expander plate is of a size that accommodates a stack that is more than 2 U tall. Recognizing that there may be an unutilized slot in the stack and to prevent air-flow from being diverted out of the interior enclosure **65** of the staked module, a dummy AMC card with a faceplate and AMC form factor but with no functionality is utilized to seal the slot and prevent air leaks.

[**0070**] In another embodiment, the present invention contemplates a AMC card form factor with a faceplate and a mechanical structure to obstruct the flow and divert it off the designed-for path. In this manner, the multiple fan modules of the stacked modular structure and the relatively unobstructed construction of each unit chassis may be advantageously utilized to tailor the air flow through the interior enclosure **65** of the stacked modules.

[**0071**] FIGS. **17** and **18** depict another feature of the present invention wherein a special unit is a base unit **800**. To facilitate communication between remote modules over their respective backplanes or to facilitate inter-backplane signal transfer, interconnect panels **800**, **820** or **830** are used. In one embodiment, the interconnect panel is a passive interconnect in that the signals are transferred over traces that interconnect two points on different backplanes. In a second embodiment, the interconnect panel is an active interconnect in that the interconnect panel includes circuitry to recondition a signal in transit between two points on separate backplanes. The reconditioning can utilize signal equalization and pre-emphasis well known in the art to recondition a degraded signal. FIG. **18** depicts three interconnect panels **810**, **820** and **830** extending and communicatively coupling points on backplanes of the second module, the third module and the fourth module in the stack to a point on the backplane of the first module. Back-cover **515** of height 1 U is combined with a back-cover **532** of height 2 U to form a back-cover of height 4 U. Removable panels **520** and **525** are absent in the interfaces between the back-covers **515** and **532** to allow the interconnect panels **810**, **820** and **830** to extend vertically between backplanes.

[**0072**] Referring now to FIGS. **19** and **20**, there is illustrated another feature of the present invention wherein a pair of unit chassis **900** and **910** are physically and communicatively coupled via a mid-plane **920**. As shown in FIG. **20**, unit chassis **900** is configured to house AMC cards and is equipped with a backplane **30** as described in the foregoing sections. Unit chassis **910** is configured as a rear transition module (RTM) equipped to receive a rear transition board **925** that may be a proprietary board such as for example, a single board computer (SBC). Interconnect backplane **920** interconnects the rear transition board **925** to the AMC modules in unit chassis **900** via the backplane **30**. Rear transition board **925** is provided with probe points and test points that may be accessed through access panel **945** without interrupting the operation of the AMC modules or the rear transition board **925**. AMC modules may request and obtain resources provided on the rear transition board **925**. In another embodiment, the rear transition board **925** requests resources such as storage units, made available through the AMC modules housed in unit chassis **900**.

[**0073**] The embodiments above are intended to be illustrative and not limiting. Additional embodiments are within the claims. In addition, although the present invention has been described with reference to particular embodiments, those skilled in the art will recognize that changes can be made in form and detail without departing from the spirit and scope of the invention. Any incorporation by reference of documents above is limited such that no subject matter is incorporated that is contrary to the explicit disclosure herein.

[**0074**] For purposes of interpreting the claims for the present invention, it is expressly intended that the provisions of Section 112, sixth paragraph of 35 U.S.C. are not to be invoked unless the specific terms "means for" or "step for" are recited in a claim.

1. A chassis for providing electrical, mechanical and environmental housing for Telecom Computing Architecture (TCA) compliant modules, the chassis comprising:

a first unit chassis compliant with a TCA standard and having a first form factor that defines a front side and a back side of the first unit chassis and adapted to house a plurality of TCA compliant modules, including at least one module that provides power and control to at least the plurality of modules housed in the first unit chassis;

a second unit chassis compliant with the TCA standard and the first form factor that defines a front side and a back side of the second unit chassis and adapted to house a plurality of TCA compliant modules; and

a shared backplane that operably couples the back side of the first unit chassis with the back side of the second unit chassis, the shared backplane including printed

Exhibit 2016
Axion v. Agilent
IPR2024-01467

circuitry operable to provide data communications between the plurality of modules housed within the first unit chassis and at least one module housed within the second unit chassis.

2. The chassis of claim 1 wherein the shared backplane is arranged as a mid-plane and the first unit chassis and the second unit chassis are configured in a back-to-back arrangement with the mid-plane interposed between the back side of the first unit chassis and the back side of the second unit chassis.

3. The chassis of claim 1 wherein the first unit chassis and the second unit chassis are configured in a stacked arrangement with a bottom cover of the first unit chassis and a top cover of the second unit chassis defining an outer boundary of the chassis without any corresponding cover for a top of the first unit chassis and a bottom of the second unit chassis.

4. The chassis of claim 1 wherein the first unit chassis and the second unit chassis are configured in a stacked arrangement with a single MCH housed in the first unit chassis that provides the IPMI management, networking, and clock infrastructure to all of the unit chasses in the stacked arrangement.

5. The chassis of claim 1 wherein each of the plurality of modules in each unit chassis is hot swappable without disruption of operation of other modules in other unit chasses.

6. The chassis of claim 1 wherein each of the plurality of modules is compliant with MicroTCA standards.

7. The chassis of claim 1 wherein the first unit chassis and the second unit chassis are configured in a stacked arrangement and wherein the shared backplane is comprised of at least one modular backplane extender having connectors disposed along at least one edge that are adapted to connect to at least one other backplane component to form a generally planar arrangement of the shared backplane.

8. The chassis of claim 7 wherein at least one of the modular backplane extender and the backplane component include active circuitry to condition at least a portion of the signals communicated therebetween via the connectors disposed along at least one edge.

9. A chassis for providing electrical, mechanical and environmental housing for Telecom Computing Architecture (TCA) compliant modules, the chassis comprising:

a unit chassis having a form factor compliant with a TCA standard and adapted to house a plurality of electronic modules in a corresponding slots in a configuration compliant with the TCA standard;

the unit chassis including a cover structure disposed on at least one of a top side or bottom side of the unit chassis that forms a portion of an enclosure defined by the unit chassis, the cover including at least one removable access panel that provides access to the enclosure and to the plurality of modules while maintaining structural integrity of the unit chassis.

10. The chassis of claim 9 wherein the access panel is adapted to cover an area that less than a surface area of one of the top side or bottom side of the unit chassis and be removed from the unit chassis such that a skeletal framework of the unit chassis is unaffected by removal of the access panel.

11. The chassis of claim 10 wherein the access panel comprise a pair of panels, each adapted to cover one of a corresponding top side and bottom side of the unit chassis to permit access to the enclosure from more than a single direction.

12. The chassis of claim 10 wherein the access panel is positioned generally flush with a corresponding cover structure and is at least partially supported by a recessed lip defined within the cover structure and corresponding to at least a portion of the area that is less than the surface area of one of the top side or bottom side of the corresponding cover structure.

13. A chassis for providing electrical, mechanical and environmental housing for Telecom Computing Architecture (TCA) compliant modules, the chassis comprising:

a unit chassis having a first form factor compliant with a TCA standard and adapted to house a first number of electronic modules in a corresponding slots in a first configuration compliant with the TCA standard and adapted to house a second number of electronic modules in corresponding slots in a second configuration, the second configuration being compliant with the TCA standard and different than the first configuration, the unit chassis being adjustably reconfigurable between the first and second configurations without a change in outer dimensions of the first form factor.

14. The chassis of claim 13 wherein the unit chassis including a frame structure and a plurality of struts cooperating with the frame structure to accommodate the electronic modules, the struts adapted to be selectively positioned in a first position in the frame structure to create the first configuration and in a second position in the frame structure to create the second configuration.

15. The chassis of claim 14 wherein the TCA standard is a MicroTCA standard, the electronic modules are AMC cards and the first position supporting a single wide AMC card and the second position supporting a double wide AMC card.

16. A chassis for providing electrical, mechanical and environmental housing for Micro Telecom Computing Architecture (MicroTCA) compliant modules in a Pico-shelf compliant configuration, the chassis comprising:

a first unit chassis compliant with a MicroTCA standard and having a first form factor that defines a front side and a back side of the first unit chassis in compliance with a Pico-shelf standard of the MicroTCA standard and a cover positioned on one of a top side or a bottom side of the chassis, the first unit chassis including a frame structure and a plurality of struts cooperating with the frame structure to accommodate a plurality of MicroTCA compliant modules, including at least one module that provides power and control to at least the plurality of modules housed in the first unit chassis;

a second unit chassis compliant with the MicroTCA standard and having the first form factor that defines a front side and a back side of the second unit chassis in compliance with the Pico-shelf standard of the MicroTCA standard and a cover positioned on the other of the top side or the bottom side of the chassis from the cover of the first unit chassis, the second unit chassis including a frame structure and a plurality of struts cooperating with the frame structure to accommodate a plurality of MicroTCA compliant modules;

at least one third unit chassis compliant with the MicroTCA standard and having the first form factor

Exhibit 2016
Axion v. Agilent
IPR2024-01467

that defines a front side and a back side of each third unit chassis in compliance with the Pico-shelf standard of the MicroTCA standard, the third unit chassis including a frame structure and a plurality of struts cooperating with the frame structure to accommodate a plurality of MicroTCA compliant modules, wherein all of the third unit chassis are positioned vertically between the first unit chassis and the second unit chassis in a stacked configuration; and

a shared backplane that operably couples the back sides of the first unit the second unit chassis and the at least one third unit chassis in the stacked configuration, the shared backplane including printed circuitry operable to provide data communications between the plurality of modules housed within the first unit chassis and at least one module housed within the second unit chassis and at least one module housed within the at least one third unit chassis.

17. The chassis of claim 16 wherein the shared backplane is a single, planar power management and distribution printed circuit board (PCB).

18. The chassis of claim 16 wherein the shared backplane provides an integrated power and signal management system spanning the unit chasses in the stacked configuration from the at least one module that provides power and control in the first unit chassis.

19. A chassis for providing electrical, mechanical and environmental housing for Telecom Computing Architecture (TCA) compliant modules, the chassis comprising:

a first unit chassis compliant with a TCA standard and having a first form factor that defines a front side and a back side of the first unit chassis and adapted to house a plurality of TCA compliant modules in slots defined in the first unit chassis, including at least one module that provides a cooling air flow to at least the plurality of modules housed in the first unit chassis;

a second unit chassis compliant with the TCA standard and the first form factor that defines a front side and a back side of the second unit chassis and adapted to house a plurality of TCA compliant modules in slots defined in the second unit chassis, the first and second unit chassis being arranged with the front sides and the back sides corresponding to each other and in a stacked configuration; and

a filler module adapted to be inserted into an unoccupied slot in the first unit chassis, the filler module including means for redirecting the cooling air flow from the first unit chassis to the second unit chassis.

20. A chassis for providing electrical, mechanical and environmental housing for Telecom Computing Architecture (TCA) compliant modules, the chassis comprising:

a unit chassis compliant with a TCA standard and having a form factor that defines a front side and a back side of the unit chassis and adapted to house a plurality of TCA compliant modules, including at least two fan modules insertably housed in the unit chassis from the front side that each provide a cooling air flow to at least the plurality of modules housed in the first unit chassis, a first of the fan modules directing air flow from the front side to the back side and a second the fan modules directing air flow from the back side to the front side.

* * * * *

Exhibit 2016
Axion v. Agilent
IPR2024-01467