IN THE UNITED STATES PATENT AND TRADEMARK OFFICE

In the *Inter Partes* Review of U.S. Patent No. 10,299,336

Trial No.: Not Yet Assigned

Issued: May 21, 2019

Filed: June 21, 2018

Inventors: John Edward Bowen and Raymond Janik

Assignee: Signify Holding B.V.

Title: CONFIGURABLE LIGHTING SYSTEM

DECLARATION OF J. GARY EDEN UNDER 37 C.F.R. § 1.68

1. I, J. Gary Eden, do hereby declare:

2. I am making this declaration at the request of Luminex International Company, Ltd. ("Luminex"), in the matter of the *Inter Partes* Review of U.S. Patent No. 10,299,336 ("the '336 Patent").

3. I am being compensated for my work in this matter at an hourly rate of $800 per hour. My compensation in no way depends on the outcome of this matter.

4. In preparing this Declaration, I considered the following materials:

a) The '336 Patent (Ex. 1001) and its file history (Ex. 1007);

b) U.S. Patent No. 10,234,091 ("Chaimberg") (Ex. 1003);

c) U.S. Patent No. 7,178,941 ("Roberge") (Ex. 1011);

d) U.S. Patent No. 9,801,250 ("Halliwell") (Ex. 1012);

e) U.S. Patent No. 7,192,160 ("Reiff") (Ex. 1013); and

f) Materials cited in this Declaration.

I. Professional Background

5. My qualifications for forming the opinions set forth in this declaration are summarized here and explained in more detail in my *curriculum vitae*, which is attached as Appendix A and incorporated herein. Appendix A also includes a list of my publications and the patent matters in which I have testified at a deposition, hearing, or trial during the past ten years. The following description is meant to be exemplary, and for brevity I omit some of my relevant experience from the approximately 51 years I have spent working in the optoelectronics field.

6. I received the B.S. degree in Electrical Engineering from the University of Maryland (College Park) in 1972, the M.S. degree in Electrical Engineering in from the University of Illinois (Urbana) in 1973, and the Ph.D. degree in Electrical Engineering from the University of Illinois in 1976. During my graduate research at the University of Illinois, I conducted experiments with some of the earliest semiconductor lasers and LEDs (Gallium Arsenide – GaAs) that had been fabricated at IBM by Dr. John Marinace. Professor Nick Holonyak, Jr., the inventor of the first LEDs (Aluminum Gallium Arsenide – AlGaAs), was a member of my Ph.D. Committee.

7. In 1975, I was appointed a National Research Council (NRC) Postdoctoral Research Associate at the U.S. Naval Research Laboratory (NRL) in

Washington, D.C. where I conducted research on ultraviolet and visible lasers. From 1976 through August of 1979, I served as a Laser Physicist on the staff of NRL's Optical Sciences Division. In that capacity, I discovered and developed a variety of ultraviolet and visible (primarily violet, blue, and green) lasers, and received the NRL Research Publication Award for the discovery of a particular laser.

8. In 1979, I joined the faculty of the University of Illinois (Urbana-Champaign) and have now served in the Department of Electrical and Computer Engineering (ECE) for more than 44 years. I have served as Assistant Dean in the College of Engineering, Associate Dean of the Graduate College, and Associate Vice-Chancellor for Research. I have served (and continue to serve) as Director of the Laboratory for Optical Physics and Engineering, as well as Research Professor in the Coordinated Science Laboratory, and Professor in the Holonyak Micro and Nanotechnology Laboratory (HMNTL). I have received affiliate faculty appointments in the Departments of Bioengineering, Materials Science and Engineering, and Nuclear, Plasma and Radiological Engineering for a number of years. During my career, I have taught a wide range of courses in electronic circuits, electromagnetics (study of antennas, theory of light, etc.), semiconductor devices such as transistors and LEDs, lasers, nonlinear optics, and plasmas.

9. During my tenure at the University of Illinois, I have conducted research devoted to the discovery and development of numerous types of light

sources in the visible, ultraviolet (UV), and vacuum ultraviolet (VUV) regions of the electromagnetic spectrum, including light emitting diodes (LEDs), lasers, and plasma lamps. My research has involved studying the atomic and molecular physics, material properties (including optical properties), and laser spectroscopy of both solid state (semiconductor and non-semiconductor) and plasma (gas discharge)-based optical sources. I have worked on both the light emitting elements of these devices and their packaging for use in a variety of applications.

10. To date, 65 individuals have received the Ph.D. degree in ECE, Physics, Materials Science and Engineering, Chemistry, Bioengineering, Nuclear, Plasma, and Radiological Engineering, or Environmental Engineering under my direction. I am the author or co-author of more than 330 peer-reviewed scientific publications and 104 patents. The claims for several other patent applications have recently been allowed.

11. I am a Fellow of the Institute of Electrical and Electronics Engineers (IEEE), the Optical Society of America, the American Physical Society, the American Association for the Advancement of Science (AAAS), and the Society of Photo-Optical Instrumentation Engineers (SPIE). I have served in several official positions of the IEEE Photonics Society and, in 1998, I served as President of the Society.

12. I am a co-founder of four companies, three of which are manufacturing products today. Two of these (Eden Park Illumination and Cygnus Photonics) are devoted to visible/ultraviolet optical sources and their applications in industry and medicine. For a number of years, Eden Park manufactured large (1 ft^2 in area) but flat white lamps for the cinematography and videography markets. Producing more than 3000 lumens with a color rendering index (CRI) above 90, these lamps received awards from the National Association of Broadcasters. Today, Eden Park manufactures a wide range of flat and efficient UV and VUV lamps. These lamps are used for applications such as materials identification, curing of polymers, medical phototherapeutics, and surface disinfection. Indeed, Eden Park lamps emitting at 222 nm are presently (and during the COVID-19 pandemic) being applied worldwide to disinfect air and surfaces in public spaces. These lamps have been installed in restaurants, restrooms, commercial buildings, and military installations because 222 nm UV "light" is not harmful to human tissue (as are UV "germicidal" lamps) but is lethal for viral and bacterial pathogens. Cygnus Photonics manufactures ultraviolet photolithography systems, as well as systems for the photo-assisted growth of semiconductor thin films and electronic and optical devices.

13. During my formal education, I acquired a background in electrical engineering and physics, particularly in the sub-fields of optics, optical engineering,

semiconductor physics, microelectronics, and optoelectronics. This background facilitated my academic, governmental, and industrial research and development activities. Over the past 51 years, my work has centered on research in, and the development of, light-emitting devices including LEDs, lasers, and lamps. In short, my academic, government laboratory, and industry experience in creating, developing, and manufacturing optoelectronic devices and products has explored most of the visible and UV emitters in existence (in the solid or gas phase).

14. In addition to the above educational background, I hold two licenses from the Federal Communications Commission (FCC). The first is a professional "First Class Radiotelephone" license that qualifies me to control commercial radio stations. The second is also a radio license that authorizes me to operate a private radio station. Qualifying for these licenses, and operating stations, gave me considerable experience with electronic circuits.

15. I have received a number of research honors, including, among others, the SPIE Harold E. Edgerton Award (2010), the C.E.K. Mees Medal from the Optical Society of America (2007), the Aron Kressel Award from the IEEE Lasers and Electro-Optics Society (2005) (now known as the IEEE Photonics Society), the Third Millennium Medal from the IEEE (2000), and the Distinguished Service Award from the IEEE Lasers and Electro-Optics Society (1996). In 2014, I was elected into the National Academy of Engineering (NAE) and the National Academy

of Inventors (NAI). In 2020, I was elected into the Innovation Hall of Fame of the A. James Clark School of Engineering at the University of Maryland.

16. As noted earlier, this summary of my research and experience is meant only to provide general background, and additional experience is set forth in my CV. Nevertheless, I believe that my experience provides the background necessary for me to provide expert testimony on the issues set forth in this declaration.

II. Relevant Legal Standards

17. I have been asked to provide my opinion as to whether certain claims of the ’336 Patent are anticipated or would have been obvious to a person of ordinary skill in the art at the time of the invention in view of the prior art.

18. I am an electrical engineer by training and profession. The opinions I am expressing in this report involve the application of my knowledge and experience to the evaluation of certain prior art with respect to the ’336 Patent. My formal knowledge of patent law is no different than that of any lay person. Therefore, I have requested the attorneys from Jones Day, who represent Luminex, to provide me with guidance as to the applicable law in this matter. The paragraphs below express my understanding of how I must apply current principles related to patent validity to my analysis.

19. It is my understanding that in determining whether a patent claim is anticipated or obvious in view of the prior art, the Patent Office must apply the

Phillips standard to construe the claim by giving the claim its ordinary and customary meaning, consistent with the specification and prosecution history.

20. It is my understanding that a claim is anticipated under 35 U.S.C. § 102 if each and every element and limitation of the claim is found either expressly or inherently in a single prior art reference.

21. It is my understanding that a claim is unpatentable under 35 U.S.C. § 103 if the claimed subject matter as a whole would have been obvious to a person of ordinary skill in the art at the time of the invention. I also understand that an obviousness analysis takes into account the scope and content of the prior art, the differences between the claimed subject matter and the prior art, and the level of ordinary skill in the art at the time of the invention.

22. In determining the scope and content of the prior art, it is my understanding that a reference is considered analogous prior art if it falls within the field of the inventor's endeavor. In addition, a reference is analogous prior art if it is reasonably pertinent to the particular problem with which the inventor was involved. A reference is reasonably pertinent if it logically would have commended itself to an inventor's attention in considering his problem. If a reference relates to the same problem as the claimed invention, that supports use of the reference as prior art in an obviousness analysis.

23. To assess the differences between prior art and the claimed subject matter, it is my understanding that 35 U.S.C. § 103 requires the claimed invention to be considered as a whole. The "as a whole" assessment requires showing that a person of ordinary skill in the art at the time of invention, confronted by the same problems as the inventor and with no knowledge of the claimed invention, would have selected the elements from the prior art and combined them in the claimed manner.

24. It is my further understanding that the Supreme Court has recognized several rationales for combining references or modifying a reference to show obviousness of claimed subject matter. Some of these rationales include: combining prior art elements according to known methods to yield predictable results; simple substitution of one known element for another to obtain predictable results; a predictable use of prior art elements according to their established functions; applying a known technique to a known device (method or product) ready for improvement to yield predictable results; choosing from a finite number of identified, predictable solutions, with a reasonable expectation of success; and some teaching, suggestion, or motivation in the prior art that would have led a person of ordinary skill in the art to modify the prior art reference or to combine prior art reference teachings to arrive at the claimed invention.

III. Summary of My Opinions

25. In my opinion, Chaimberg anticipates and/or renders obvious claims 1, 3, 6-9, 11-13, 15, and 17-19 of the ’336 Patent, Chaimberg alone and/or in view of Roberge renders obvious claims 2, 4, 5, 10, 14, 16, and 20 of the ’336 Patent, Halliwell anticipates and/or renders obvious claims 1-5, 7, 9-13, 15, 16, 19, and 20 of the ’336 Patent, and Reiff anticipates and or renders obvious claims 13 and 15 of the ’336 Patent. Every aspect of the technology described in the ’336 Patent was well-known in the field of architectural lighting decades before the ’336 Patent’s priority date.

IV. Person of Ordinary Skill in the Art (“POSA”)

26. It is my understanding that when interpreting the claims of the ’336 Patent, I must do so based on the perspective of a person of ordinary skill in the art as of the relevant priority date. The ’336 patent has an earliest-claimed priority date of February 19, 2016. However, as I explain below, claims 1-20 of the ’336 patent are not entitled to the 2016 priority date of provisional application No. 62/297,424 (the “’424 Provisional”), or the 2017 priority dates of Application No. 15/811,062 (the “’062 Application”) or Application No. 15/435,141 (the “’141 Application”). Rather, as discussed in detail below, claims 1-20 are entitled to a priority date of June 21, 2018, the date on which the application for the ’336 patent was filed.

27. I am advised that in defining a person of ordinary skill in the art the following factors may be considered: (1) the educational level of the inventor; (2) the type of problems encountered in the art; (3) prior art solutions to those problems; (4) the rapidity with which innovations are made; (5) sophistication of the technology; and (6) the educational level of active workers in the field.

28. Based on my review of the '336 Patent and my background and experience in the fields of LEDs and lighting design, it is my opinion that a person of ordinary skill in the art of the '336 Patent would have had a bachelor's degree in mechanical engineering, electrical engineering, or physics with at least three years of experience working in LEDs and lighting design; a master's degree in one of the above disciplines with at least two years of experience working in LEDs and lighting design; or other equivalent experience. This definition for the POSA would have been applicable: (i) at the '336 patent's earliest-claimed priority date of February 19, 2016; and also (ii) at the June 21, 2018 priority date to which claims 1-20 of the '336 patent are entitled.

29. As described above, my own training and experience exceeds that of a person of ordinary skill in the art.

V. <u>Technology Background and the State of the Art</u>

30. Because LEDs are more electrically efficient and compact than traditional lighting sources, such as the incandescent bulb and fluorescent lamps,

LEDs have risen to prominence in the lighting industry over the past two decades and the process of gradually replacing traditional, less-efficient light sources is well underway. LED lamps are currently manufactured in various packages or forms, including the familiar bulb and cylindrical replacements for fluorescent tubes. One or more LED lamps installed into a light fixture is a complete lighting unit known as a luminaire. At the risk of a loss of precision, the terms "light fixture" and "luminaire" will be treated interchangeably throughout the remainder of this declaration.

A. Correlated Color Temperature (CCT)

31. An important consideration in the design of white LEDs and white light luminaires is the desired spectrum. Although white light generally comprises all the colors of the rainbow, manufacturers offer a range of white LEDs and LED lamps that produce differing hues and tones. For example, "warm white" is the term given to white light that has an orange or red hue. Such a "warm white" LED or lamp emits light for which the spectrum has been intentionally skewed to the red portion of the visible region such that the spectrum produced by the lamp contains *proportionately* more red and orange light than that generated by the sun, for example. Consequently, the preponderance of the light emitted by the lamp or luminaire is red, orange, and yellow. Conversely, "cool white" LED lamps emit light having a bluish-tinge and a spectrum that is blue "rich" (i.e., having a spectrum

with the blue portion of the spectrum proportionately more intense than the same portion of the sun's spectrum).

32. The term correlated color temperature (CCT) has been adopted by industry as a guide describing the hue of light emitted by a lamp or light fixture. The "warm" white light discussed above, for example, will have a CCT value between approximately 2500 K and 3500 K, where K represents Kelvin which is a measure of temperature similar to Fahrenheit and Celsius. Those lamps producing relatively more orange and red light will have a lower CCT value. Conversely, a lamp or luminaire producing "cool" white light has a blue tint. Because it produces relatively more blue light than the sun's spectrum, it will typically be assigned a value of CCT above 5000 K by the manufacturer. For reference, the color temperature of the spectrum radiated by the sun is 5700 K.

33. The desired location for a particular LED lamp or fixture often has a strong influence on the CCT of the lamp. The set of photographs below, for example, illustrates the impact of varying the CCT of the lighting on the appearance of a particular residential setting. Architectural lighting is the occupation concerned with the design of interior lighting through the control of CCT and light intensity throughout a given interior or exterior space. Speaking generally, lighting of lower CCT can be found in restaurants and homes whereas higher CCT lighting (above 4500 K) is more common in office settings and industrial areas.

Ex. 1005, 1.

34. Another important measure of the light emitted by an LED lamp is that of the Color Rendering Index (CRI). The CRI is a number between zero and 100 that indicates the degree to which the light spectrum of the lamp or fixture matches that for the sun. A CRI of 100 represents a perfect match to the sun's spectrum. The CRI also provides an indicator of how colors will appear to the human eye when viewed by a particular light or set of lights. For example, those demanding retail applications (such as the display of jewelry) in which the illumination must closely match the sun's clarity and brightness generally require a CRI above 90.

35. The ability to independently control the CCT of luminaires and their intensity, and to vary these values throughout the day, has come to be the dominant theme in architectural lighting and is known as "tunable white technology". A recent article by Gregory Kay, an architectural lighting designer, described the development and status of "Architectural SSL [Solid State Lighting]: Tunable white light and its benefits become more accessible", *LEDS Magazine* (September 14,

2023). Ex. 1014. Changing ("tuning") the CCT of lighting has been of considerable interest to lighting designers since at least the early 2010s and Kay describes the installation in 2016 of "time-controlled, Kelvin-changing lighting" in the Amsterdam offices of a major European company. *Id.*

B. Electrical Switches Were Well-Known Long Before The Alleged Invention of The '336 Patent

36. Electrical switches were developed early in the history of electrotechnology because of the need, for reasons of safety, power conservation, preparation for maintenance, and others, to be able to interrupt at will the power flow to any electrical system. Today, switches are ubiquitous and include ignition of one's automobile, spring-loaded foot switches and rotary switches on lights, power switches on appliances, power tools, and many more. It is inconceivable for any electrical system such as consumer product, electronics, etc. to not have at least one electrical switch. Over the past century, switches have also been developed into a wide variety of forms such as toggle switches, slide switches, rotary switches, and button switches. Furthermore, switches serve a variety of functions beyond simply breaking the electrical circuit that delivers power to a device or system. For example, switches in radios and televisions serve to direct the user from one station or network to another, or switch audio from one speaker to another. The applications of switches are limited only by our imagination.

37. As discussed in greater detail later, the electrical switch has a central role in the ’336 patent. The Abstract of the ’336 patent states:

> The luminaire can also include a switch coupled to the electrical cable, where the switch is disposed remotely from the housing, where the switch has multiple positions, wherein each position of the switch corresponds to a discrete color temperature (CCT) output by one or more light sources of the luminaire.

Ex. 1001, Abstract. The importance of an electrical switch to the ’336 Patent is evident because each of the 20 claims mention the switch, and four claims mention specific switches (dial, slide, and rotary). Furthermore, claims 13-20 are directed to the switch. In three separate sections of the ’336 Patent’s specification, 7:34-44, 9:54-63, and 11:66-12:15, the patent enumerates the types of switches that might be used, all of which were well-known and incorporated into electronic systems on a massive scale long before the earliest possible priority date for the ’336 Patent. *Id.*, 7:34-44, 9:54-63, and 11:66-12:15.

38. Because the specification emphasizes the slide switch (*cf. id.*, Fig. 6C and 9:64-10:27), a few comments regarding its history are warranted. The electrical slide switch was patented at least as early as March of 1958 by Wingard (U.S. Patent No. 2,828,393), and Bailey et al. subsequently patented a significantly improved version in 1970 (U.S. Patent No. 3,502,825). Exs. 1015, 1016. Further improvements were achieved by the Switchcraft Corp. in the early 1970s. The point to be made, therefore, is that the technology for this switch was established almost

fifty years ago and has remained essentially unchanged since. The history of each of the switches mentioned in the ’336 Patent is similar to that for the electrical slide switch. As discussed below, therefore, it is my opinion that the ’336 Patent is not inventive in employing a switch, or in its use of the switch to energize groups (pluralities) of LEDs at will for altering the CCT of interior or outdoor lighting.

C. Tunable White Light Technology Has Been Known In The Field of Architectural Lighting For Two Decades

39. As discussed above, the ability to independently control the CCT of luminaires and their intensity, and to vary these values at will, is well known in the field of architectural lighting and is known as “tunable white technology”. The origins of this technology were developed and manufactured early in this century. The ’336 patent states:

> Need is apparent for a technology to provide a light emitting diode system that can adapt to various applications, for example, by delivering multiple color temperatures.

Ex. 1001, 1:50-52. This statement implies that the patent is the first to “deliver[] multiple color temperatures” when, in fact, the concept of controlling the CCT of the spectrum emitted by an ensemble of LEDs extends back over at least two decades. *Id.*

40. For example, U.S. Patent No. 7,014,336 (“Ducharme”), awarded to Color Kinetics in the early 2000s, disclosed a number of lighting fixtures, including luminaires, that “comprise a plurality of LEDs” producing “white light within a

range of color temperatures such as, but not limited to, the range 500K to 10,000K." Ex. 1002, 4:54-61.

41. Much like the '336 Patent nearly two decades later, Ducharme's "lighting fixture may include a controller and/or processor for controlling the intensities of the LEDs to produce various color temperatures in the range." *Id.*, 4:62-64. Figure 10a of Ducharme shows "a manual control"—*i.e.*, a switch—for controlling the CCT output of a LED lighting fixture. *Id.*, 7:23-24. Figure 10b shows the control unit 2036 in detail, which is a "dial [switch] marked to indicate a range of color temperatures, e.g., from 3000K to 10,500K." *Id.* 16:64-17:2. Ducharme discloses that the switch 2036 "would be useful on a lighting fixture to produce a range of color temperatures ('colors') of white light." *Id.* While the switch 2036 is shown as a dial switch, Ducharme discloses that it could be "a dial, slider, switch, multiple switch, console … or any other … combination of controllers to permit a user to modify the illumination conditions." *Id.*, 16:45-50. In summary, the use of any of a wide range of switches to vary the CCT of light produced by an LED light fixture (luminaire) was well known at least as early as 2000, eighteen years before the alleged invention of the '336 Patent.

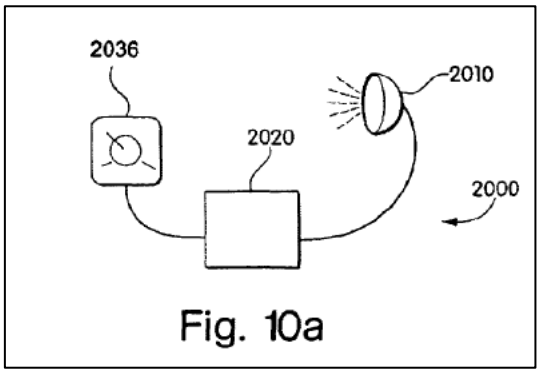

Fig. 10a

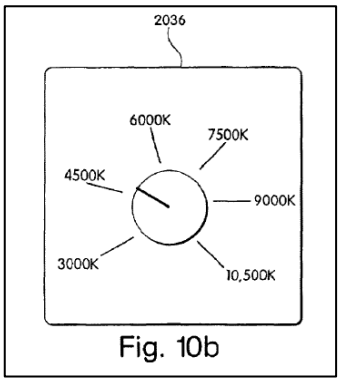

Fig. 10b

Id., Figs. 10a, 10b.

42. Roberge, described in more detail in Sections VIII.B and X below, provides another example of a manual CCT switch that was disclosed in May 2003, more than fifteen years before the alleged invention of the ’336 Patent. Roberge discloses a number of LED “[l]ighting methods and systems [with] a plurality of LEDs.” Ex. 1011, 1:28-31. Roberge includes “a dial [that] allows a user to select one or more color temperatures from a scale 3414[, which can] include different color temperatures of white light.” *Id.*, 42:51-54. Roberge Fig. 34i is a depiction of a manual CCT switch that was known in the art more than 15 years before the alleged invention of the ’336 Patent.

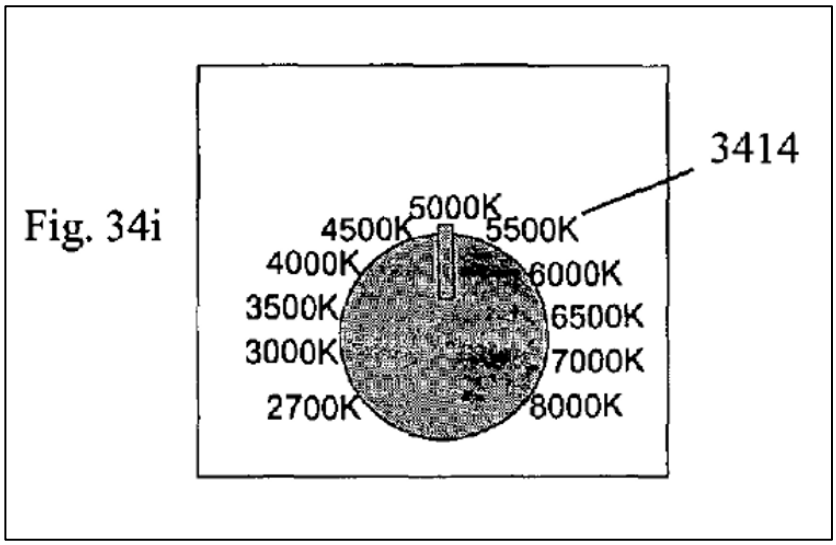

Id., Fig. 34i.

43. During the following decade, the LED lighting industry made enormous improvements in optimizing the CCT of indoor and outdoor lighting. For example, on December 22, 2014—four years before the alleged invention of the Patent-in-Suit—Luminex disclosed in a patent application that issued as U.S. Patent No. 9,345,112 (the "'112 Patent") a color-tunable CCT light fixture.[1] The invention of Luminex's '112 Patent goes far beyond simple mechanical switches that are inaccessible when installed. Luminex's '112 Patent discloses a light fixture with a microcontroller-based switch that uses infrared ray sensors to detect a user's instructions regarding the desired value of CCT. Other possible switch configurations are also described, including a button switch. For example, the touchless switch such as an infrared ray, or a direct touch switch such as a push

[1] It should be noted that the inventor of the '112 Patent is Luminex's owner.

button, generates a sensing signal that results in controlling "the color temperature of the blended light" output of the '112 Patents' LED light fixture. Ex. 1006, 10:43-45. The '112 Patent discloses a range of CCT values, ranging from 3000 K to 5700 K, that can be selected with the microcontroller based switch. *Id.*, 6:47-7:11.

44. The invention disclosed in Luminex's '112 Patent enables the blending of the light produced by two sets of LEDs having different CCT values in order to create a third CCT value that is determined by: (1) the CCTs of the two sets of LEDs, and (2) the ratios of power level respectively delivered to each of the two sets of LEDs. This method is known as CCT or, as described earlier, "white light" tuning. Luminex's '112 Patent performs "color temperature tuning [by] controlling different levels of electric power transmission to the two lighting loads [reversely and complementary] 2a [LEDs of a first temperature] and 2b [LEDs of a second temperature] by controlling" the power delivered to the LEDs as shown in Fig. 8A below. Ex. 1006, 8:4-8, Fig. 8A.

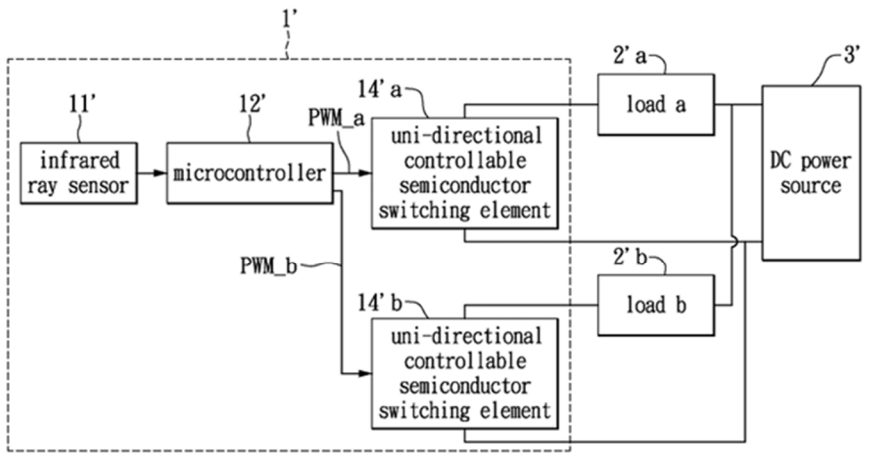

FIG. 8A

Id., Fig. 8A.

45. Luminex's '112 Patent also presents "a wall switch construction electrically connected to a ceiling light for the performance of three working modes" in Fig. 10C. *Id.*, 22:19-21. By waving a hand in front of the wall switch 1c, a user can "select a desired illumination color temperature" of the light fixture 2c. *Id.*, 22:19-39.

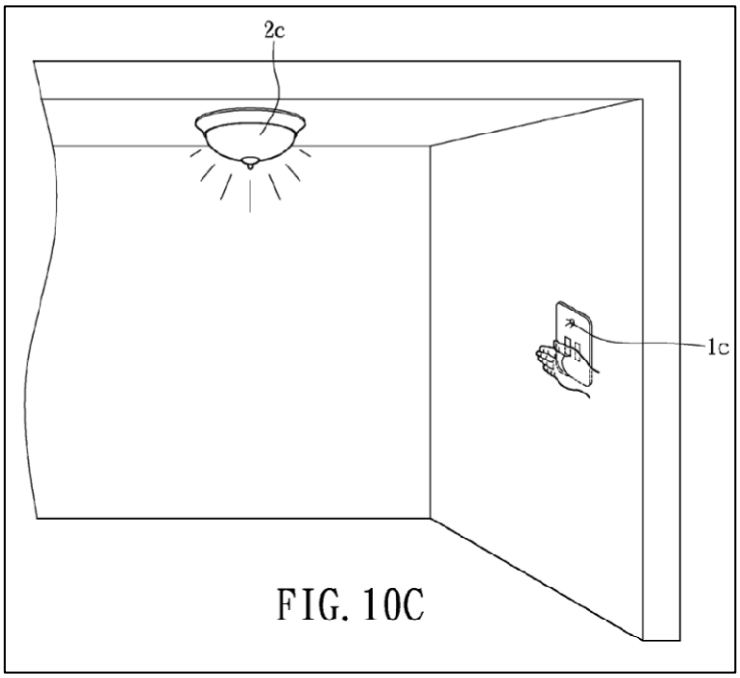

FIG. 10C

Id., Fig. 10C.

46. In short, tuning the CCT of a LED luminaire with a manual switch was well known in the art at least as early as 2000, well before the alleged invention occurred in 2018. By 2014, industry had moved far beyond manual CCT switching with traditional switches (such as slide or rotary switches), even utilizing infrared sensors and hand motion to adjust the CCT output of a LED light fixture.

VI. <u>Description of the ’336 Patent</u>

A. Overview of the ’336 Patent

47. The ’336 Patent is titled “Configurable Lighting System.” Ex. 1001, at (54). The ’336 Patent relates to “lighting systems that can be readily configured to produce illumination of different color temperatures.” Ex. 1001, Abstract; 1:19-22. In particular, the ’336 Patent discloses a luminaire that includes a housing, including

one or more LEDs, an electrical cable connecting the housing to a power source (*e.g.*, a junction box), and a switch for controlling the CCT output of the luminaire. *Id.*, 11:21-29, Fig. 9B. It should be noted that the specification of the ’336 Patent focuses on LED lighting systems but the claims appear to me to be broader than LED lighting system alone.

48. The ’336 Patent acknowledges that LED luminaires were well known in the art. For example, Fig. 8 of the ’336 Patent “shows a top-side perspective view of [a] luminaire 800 currently known in the art.” Ex. 1001, 10:66-67. The prior art luminaire 800 includes a “housing 805,” which is low profile and mounted in surface of the ceiling or wall, and a “remotely located junction box 890.” *Id.*, 11:1-12. The ’336 Patent discloses that there are “one or more [electrical] components (*e.g.* light sources) disposed on and/or within the housing 805.” *Id.* The prior art luminaire also includes “an electrical cable 827.” *Id.* “One end of the electrical cable 827 is connected to one or more components (*e.g.*, light source) disposed on and/or within the housing 805” whereas the other end “is coupled to one or more [] electrical components disposed in the junction box 890.” *Id.*, 11:5-20, 11:45-50.

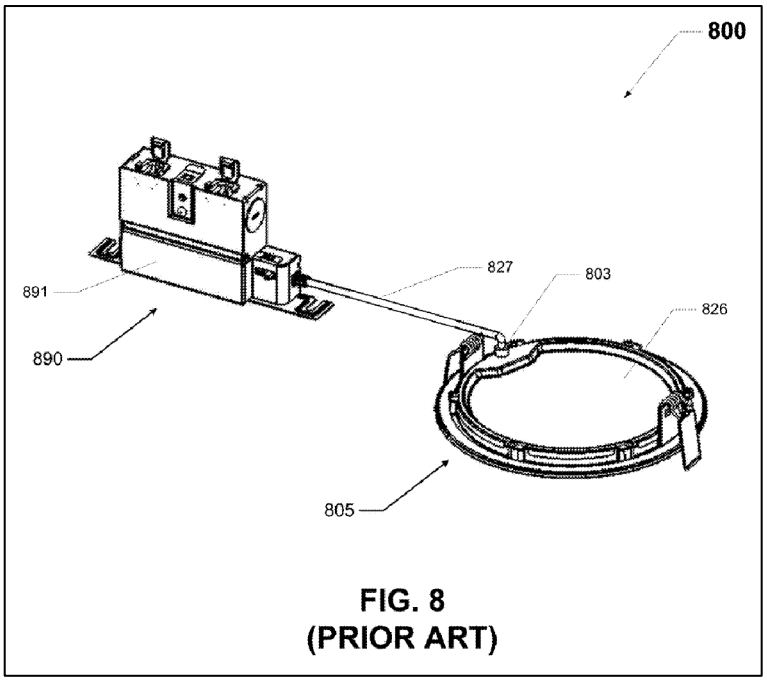

Id., Fig. 8.

49. The ’336 Patent admits that prior art luminaires “provide flexibility in terms of correlated color temperature (CCT or color temperature) and light output (lumen output). For example, a compact fluorescent downlight might accept 6-, 32-, and 42-watt lamps in 2700, 3000, and 3500 K CCT.” *Id.*, 1:31-41. The ’336 Patent states:

> Need is apparent for a technology to provide a light emitting diode system that can adapt to various applications, for example, by delivering multiple color temperatures.

Id., 1:50-53. However, as described earlier, precisely this capability in lighting control was available in commercial systems nearly two decades before the alleged invention of the ’336 Patent.

50. The claimed "luminaire 900 of FIGS. 9A and 9B is ***substantially the same as*** the [admitted prior art] luminaire 800 of FIG. 8, except that the luminaire 900 of FIGS. 9A and 9B includes the example switch 931." *Id.*, 11:26-29 (emphasis added). Indeed, as shown in the comparison below, the only feature that the inventors allegedly added over the admitted prior art was the switch 931.

Applicant Admitted Prior Art	Alleged Invention
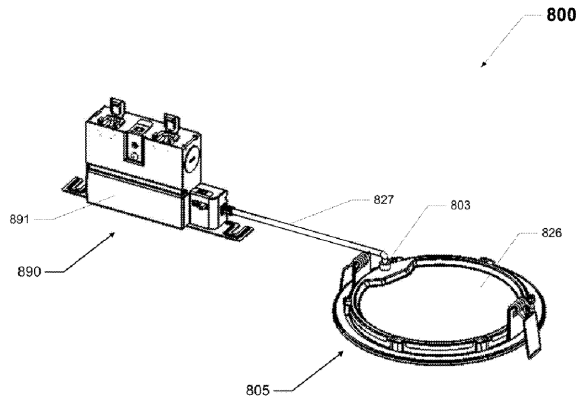 FIG. 8 (PRIOR ART)	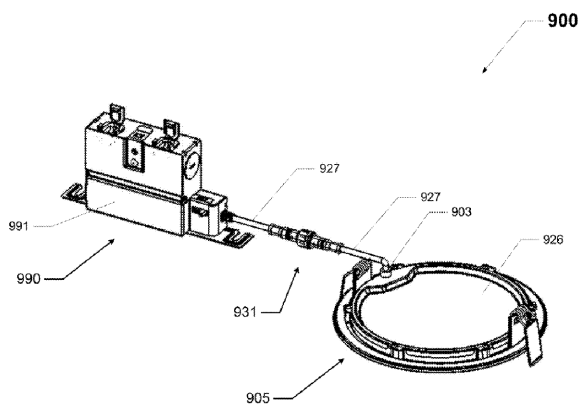 FIG. 9B

51. The '336 Patent states that the "switch 931 is used to adjust the CCT output by one or more of the light sources in the luminaire 900, and each selection of the switch 931 corresponds to a CCT within a range of CCTs." *Id.*, 12:16-21. The "switch 931 can have a range of selections that are either continuous or discrete." *Id.*, 12:16-21. The switch (931) can be coupled to the electrical cable (927) by "one or more coupling features." *Id.*, 12:1-5.

52. The ’336 Patent discloses that the switch (931) can be coupled to the cable (927), or on or within the junction box itself. *Id.*, 13:6-19. Figure 10 of the ’336 Patent, reproduced below, illustrates an embodiment of a luminaire similar to that of Fig. 9B but, in this case, the switch (1031) is disposed either within or on the side of the junction box (1090). Ex. 1001, 13:6-19, Fig. 10.

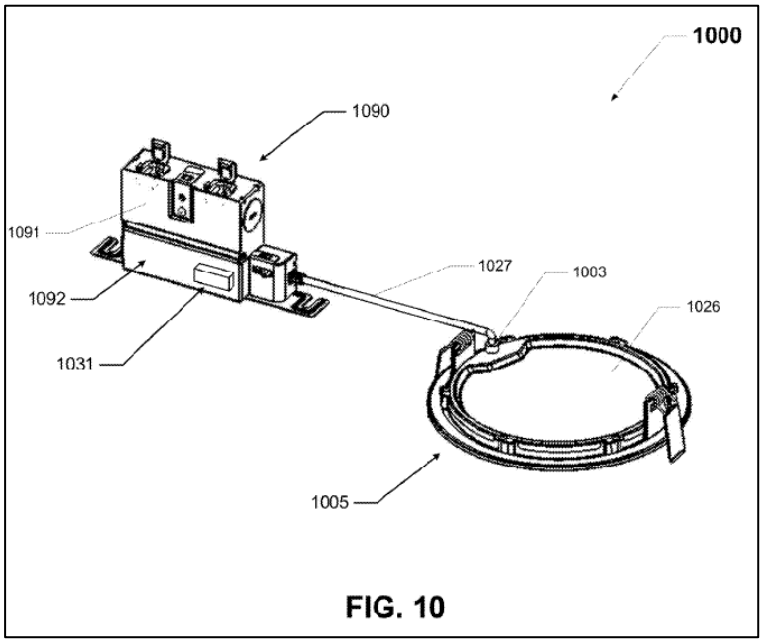

Id., Fig. 10.

53. The ’336 Patent includes two independent claims and 18 dependent claims. These claims all relate to luminaires having a color temperature control switch. Independent claim 1, and its dependent claims (claims 2-12), relate to a luminaire with a CCT switch located remotely from the housing of the light source. *Id.*, 14:30-15:20. Independent claim 13, and its dependent claims (claims 14-20) relate solely to a switch for a luminaire that is electrically coupled to an electrical cable

of the luminaire. *Id.*, 15:21-16:26. As discussed herein, the alleged inventions of claims 1-20 were well known in the art. Moreover, as noted above, the claims of the ’336 Patent do not mention LED lighting devices specifically.

54. In summary, the ’336 Patent acknowledges that LED luminaires with a junction box located remotely from the LED housing, connected by an electrical cable, were known in the prior art. The ’336 Patent also acknowledges that adjustable CCT luminaires were also known in the prior art. In fact, Ducharme (discussed above) is cited on the face of the ’336 Patent. The ’350 Patent, the specification of which (in my opinion) does not support the claims of the ’336 Patent, also discloses that LED luminaires with adjustable CCT output were known in the prior art. Accordingly, the only potentially inventive feature of the ’336 Patent is a CCT switch electrically coupled to an electrical cable of the LED fixture which is located remotely from the LED housing. This, too, was well known in the art in June of 2018.

B. File History

55. The ’336 Patent was filed by Eaton Intelligent Power Limited on June 21, 2018, as Patent Application No. 16/014,394 (the “’394 Application.”). Ex. 1001, (21), (22). The ’394 Application was filed as a continuation-in-part of U.S. Patent Application No. 15/811,062 (the “’062 Application”). Ex. 1001, (63). The ’062 Application was filed on November 13, 2017 as a continuation of application No. 15/435,141 (the “’141 Application”) which was filed on February 16, 2017 and issued

as 9,820,350 (the "'350 Patent"). Ex. 1001, (63). The '141 Application claims priority to provisional application No. 62/297,424, which was filed on February 19, 2016. Ex. 1001, (60), (63).

56. The '336 Patent was allowed without rejection on October 16, 2018, less than four months after the '394 Application was filed. Ex. 1007, 94-100 (October 16, 2018 Notice of Allowance). In the notice of allowance, the examiner indicated that the "primary reasons for the allowance of the claims are in the inclusion of the limitations" disclosing a CCT switch located away from the housing, and a CCT switch with a range of positions (claims 1-12), and the fact that the CCT switch was coupled to an electrical cable of the luminaire (claims 13-20). *Id.* The applicant filed an amendment after allowance on December 31, 2018. In this amendment, the applicant slightly modified the description of the embodiment disclosed in Figs. 9A and 9B. *See id.*, 130-193 (December 31, 2018 Amendment). The applicant then filed a request for continued examination on January 16, 2019 in which the applicant submitted an additional information disclosure statement. *Id.*, 221-229 (January 16, 2019 Request for Continued Examination). The examiner issued a second notice of allowance, again without rejection, on February 12, 2019. *Id.*, 246-250 (February 12, 2019 Notice of Allowance). The issue notification was issued on May 1, 2019 and the '336 Patent published on May 21, 2019. *Id.*, 278; Ex. 1001, (45).

57. I have been informed that Eaton Intelligent Power Limited assigned the ’336 Patent to Signify Holding B.V. in March 2020, nearly a year after the issuance of the ’336 Patent.

58. The prior art cited under grounds 1a, 1b, 2, and 3 (to be discussed in Section IX-XII) was not provided to the Examiner.

C. Claims 1-20 Have Priority Dates No Earlier Than June 21, 2018

59. The ’336 Patent was filed as a continuation-in-part application on June 21, 2018 and claims priority to: the ’062 Application, which was filed on November 13, 2017, the ’141 Application, which was filed on February 16, 2017, and the ’424 Provisional, which was filed on February 19, 2016. *See* Ex. 1001, Cover. As explained below, however, the ’141 Application, the ’062 Application, and the ’424 Provisional fail to provide written description support for claims 1-20 of the ’336 Patent, and it is my understanding that these claims are, therefore, entitled to a priority date no earlier than the ’336 Patent’s filing date of June 21, 2018.

60. Claims 1-12 require a CCT switch with discrete positions that is “coupled to [an] electrical cable [of the light fixture], wherein the switch is disposed remotely from the housing” of the light fixture. *Id.*, 14:39-45. Claims 13-20 similarly require a CCT switch that is “coupled” to an electrical cable of the light fixture. Indeed, as noted above, the examiner identified these features as the “primary reasons for the allowance of the claims.” Ex. 1007, 94-100 (October 16, 2018 Notice of

Allowance). However, I am unable to find *any* description of these features in the '424 Provisional, the '141 Application, or the '062 Application.

61. Specifically, the '424 Provisional describes a lighting system that can be "configured to produce illumination of different color temperatures." Ex. 1008, 15. The luminaire includes "[s]witches 210 [that] provide an input for configuring the luminaire 100 to operate at a selected [CCT]. In the illustrated embodiment [of the '424 Provisional], the circuit 200 comprises two manual switches 210" mounted on the circuit board. *Id.*, 19. The '424 Provisional further states that the switches 210 could comprise "dual inline pin (DIP) switches," and they could "be mounted to the housing 105 of the luminaire" or "mounted on the substrate 125," which is also located within the housing. *Id*. A POSA would have understood that these disclosures do not describe a CCT switch that is coupled to an electrical cable of the luminaire, or remotely located from the housing. Accordingly, the '336 Patent is not entitled to '424 Provisional's February 19, 2016 priority date.

62. The Applicant added additional disclosures when it filed the '141 Application on February 16, 2017. However, the '141 Application (which issued as the '350 Patent) similarly did not disclose a remotely-located CCT switch coupled to an electrical cable of the lighting device. Ex. 1009. For example, Applicant updated Fig. 1E with an illustration, and additional text, of the circuit board-mounted switch (131) disclosed in the '424 Provisional. However, the switch is still described

as "a dual inline pin switch 131 [that] is mounted on a circuit board." *Id.*, 5:12-14. The '141 Application does give several types of switches beyond the three examples presented by the '424 Provisional (*e.g.*, rocker, reed, magnetic, slide or rotary switches). However, the '141 Application again states clearly that even these new switches are still mounted to the substrate, circuit board, or housing. *Id.*, 6:28-50, 8:12-25. Thus, even the additional disclosures in the '141 Application do not describe a remotely located switch and/or a switch coupled to an electrical cable of the luminaire as required by claims 1-20.

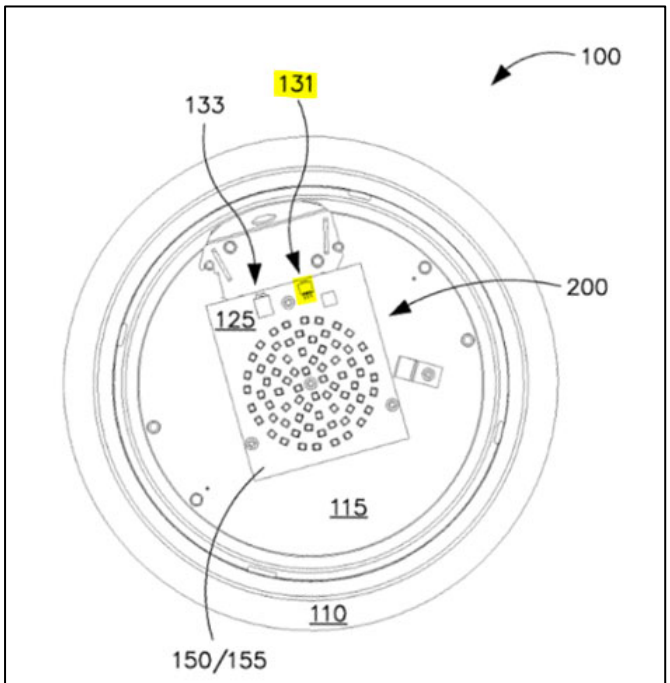

FIG. 1E

Id., Fig. 1E (color added).

63. The '062 Application was filed as a continuation of the '141 Application and therefore contains the same disclosures, the '062 Application; therefore, does not

describe the claimed switch for the same reasons set forth above with respect to the ’141 Application. It is my understanding, therefore, that the ’336 Patent is not entitled to the ’141 Application’s February 16, 2017 priority date, or the ’062 Application’s November 13, 2017 priority date.

64. When the ’394 Application was filed on June 21, 2018 as a continuation-in-part, the Applicant introduced new material, such as Figures 5-10 and the related descriptions. In the ’394 Application, for example, the Applicant described for the first time a CCT switch (931/1031) located remotely from the housing (905/1005) and includes “one or more coupling features (*e.g.*, terminal points) that are used to couple to one or more electrical conductors of one or more electrical cables 927[/1027].” Ex. 1001, 11:61-12:5; *see also id.*, Fig. 10 (showing the CCT switch 1031 mounted on the junction box 1090). This switch location and coupling features are not disclosed in the ’424 Provisional, ’141 Application, or the ’062 Application.

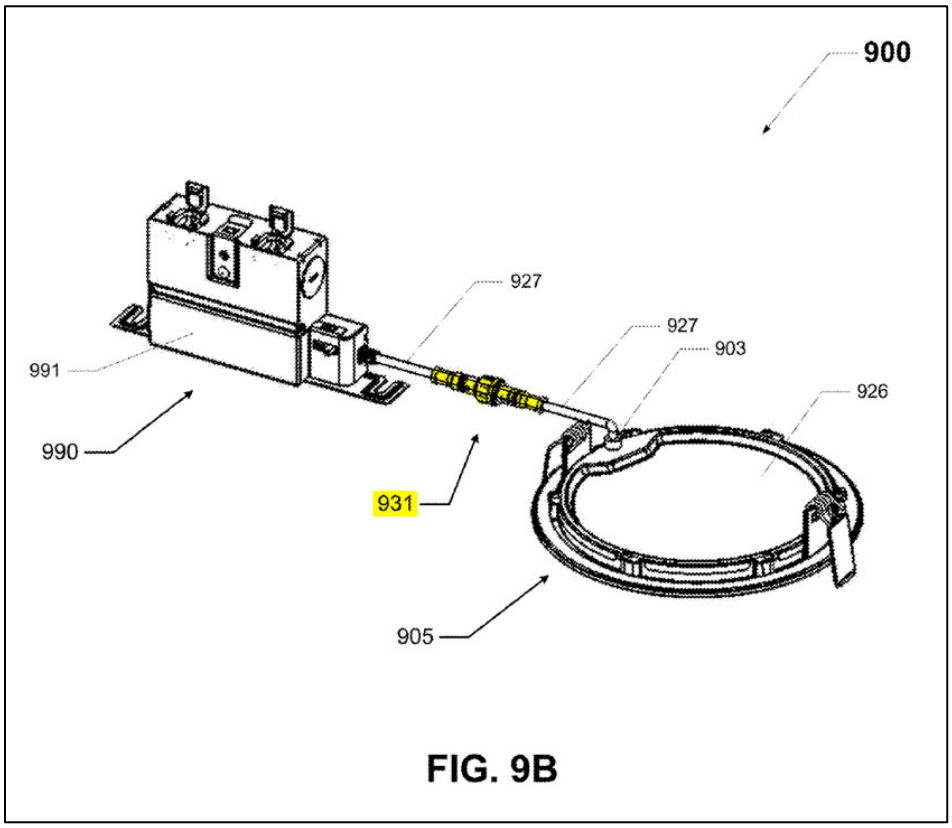

FIG. 9B

Ex. 1001, Fig. 9B (color added).

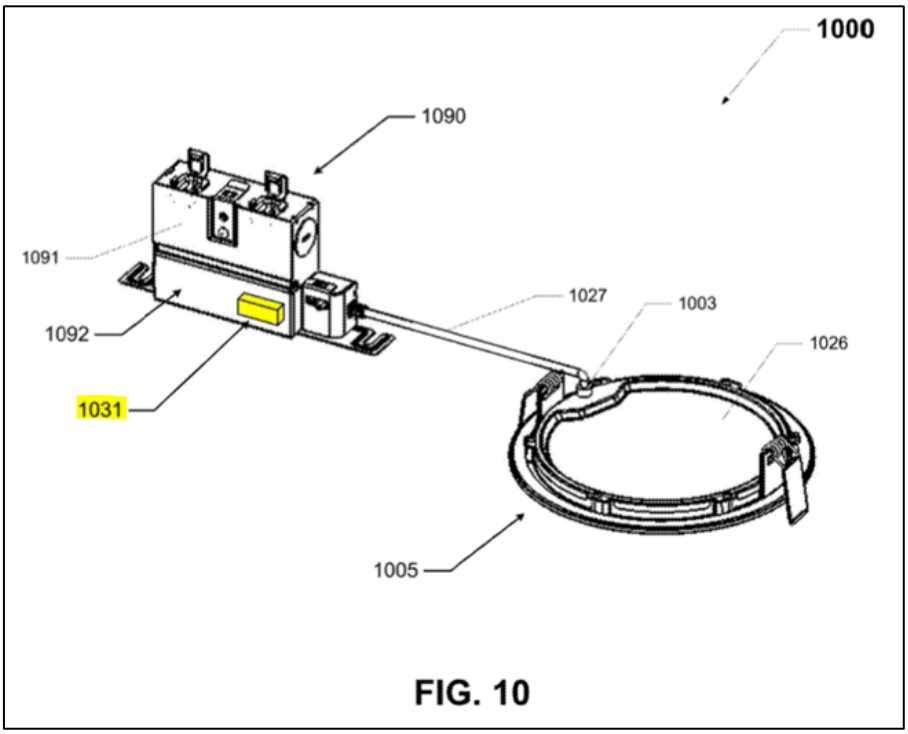

FIG. 10

Ex. 1001, Fig. 10 (color added).

65. In addition, the disclosure of a remotely located switch and/or a switch coupled to an electrical cable of the luminaire was, for the first time, included in the '394 Application. The disclosure submitted with the '394 Application acknowledged that in "embodiments discussed previously [*i.e.*, Figs. 1-8], the example switch is located on the housing of the luminaire or within the housing of the luminaire." *Id.*, 11:61-63.

66. In summary, neither the '424 Provisional, the '141 Application, nor the '062 Application provide written description support for the switch, as required by claims 1-20 of the '336 Patent. These claims are, therefore, entitled to a priority date no earlier than June 21, 2018, the date on which the '336 Patent was filed.

VII. <u>Proposed Claim Construction</u>

67. I understand that the issue as to whether or not a claim is unpatentable is decided after first interpreting the meaning of the wording and terminology found in the claim. I understand that the interpretation should be made from the perspective of a person of ordinary skill in the art, at the time of the invention.

68. I apply the same scope of the claim terms that Signify applied in its August 12, 2022 complaint against Menard and its infringement contentions served on October 31, 2022 in *Signify N.A. Corp., v. Menard, Inc.*, No. 3:22-cv-00706-jdp (W.D. Wis.). Therefore, I do not propose any terms for construction at this time.

VIII. Overview of Relevant Prior Art

A. Chaimberg

69. U.S. Patent No. 10,234,091 ("Chaimberg") was filed as Application No. 15/932,801 on April 27, 2018 and issued on March 19, 2019. Ex. 1003, (10), (21), (22), and (45). I understand that Chaimberg properly claims priority to Canadian Patent Application CA 2999308, which was filed on March 26, 2018. *Id.*, (30). Accordingly, Chaimberg is prior art to the '336 Patent under at least 35 U.S.C. § 102(a)(2).

70. Like the '336 Patent, Chaimberg discloses "[a] ceiling mountable LED light fixture … wherein at least two sets of LED's of different correlated color temperatures (CCT) are mounted in its housing." Ex. 1003, Abstract, 1:7-10, 2:24-44. Chaimberg's LED light fixture is "adapted to be removably secured" in a ceiling. *Id.*, Abstract. "A cable [15] is secured to [Chaimberg's] light fixture to supply drive current to the LED sets." *Id.*, Abstract, 3:61-4:3. Like the embodiment disclosed in Fig. 9 of the '336 Patent, Chaimberg's LED light fixture includes a CCT switch (18) mounted on the electrical cable (15), and the user can set the CCT output "by displacing a slide switch button to select one of three positions" which correspond to "three different color temperature (CCT) light" settings. *Id.*, Abstract, 3:17-20.

71. Like the luminaire claimed in the '336 Patent, Chaimberg's LED light fixture is typically installed into a ceiling. In "Fig. 1, the LED light fixture 10 is

shown retracted from its fixture mounting hole" in a ceiling. *Id.*, 3:13-15. Figure 2 is an illustration of Chaimberg's LED light fixture "mounted in the fixture mounting hole" in the ceiling. *Id.*, 2:58-61, Fig. 2.

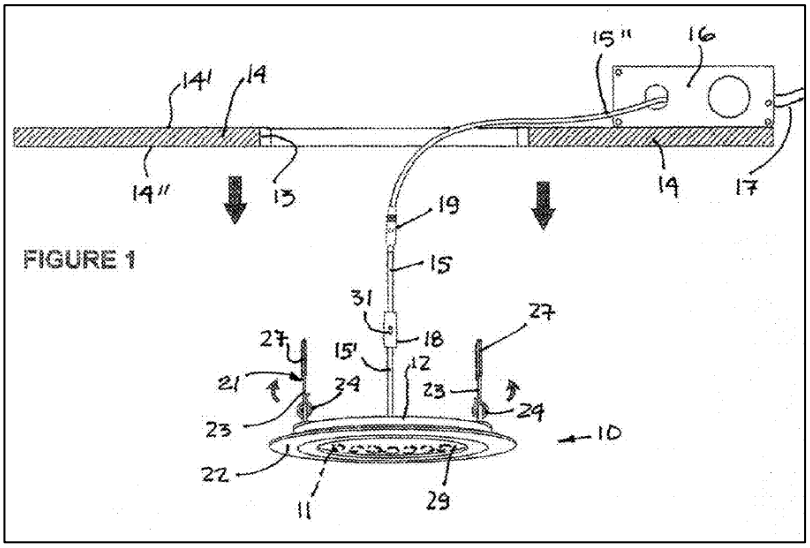

Id., Fig. 1.

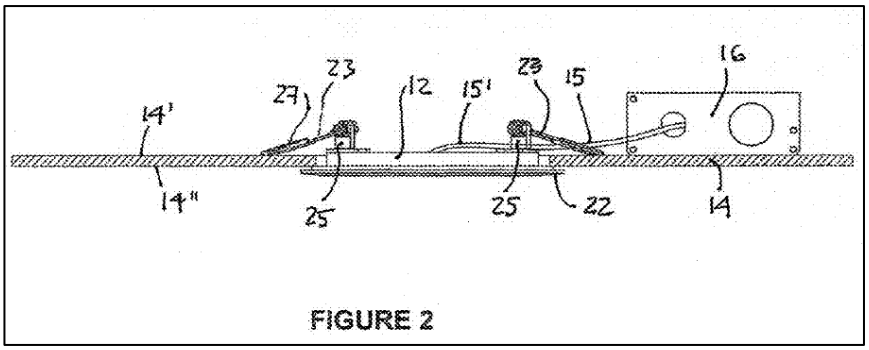

Id., Fig. 2.

72. While Chaimberg introduces an LED light fixture with the CCT switch located on the electric cable 15, Chaimberg states that, in March of 2018, typical CCT adjustable LED light fixtures included a switch "mounted on the driver housing to select a desired color temperature of the LED light fixture." *Id.* at 1:44-50; *see*

also id. at 3:28-32 ("Usually, a selector switch is mounted on the driver housing 16 to select a desired color temperature to be emitted by the light fixture."). In my opinion, in view of these disclosures, a POSA would have understood Chaimberg to state plainly that the CCT switch 18 could be placed in or on the driver housing 16 (*i.e.*, junction box). Chaimberg also recognizes that moving the switch from the junction box to a location on the cord makes the switch more accessible to the user after the light fixture is installed. In addition, while the example LED light fixture in Chaimberg's luminaire includes LEDs emitting light having *two* distinct correlated color temperatures (CCTs) so as to make possible the generation of light having one of *three* CCT outputs, it also mentions that the light fixture could include more than two sets of LEDs. One skilled in the art would conclude from Chaimberg's instructions that the invention could be scaled so as to provide an arbitrary number of LEDs, or groups of LEDs, each producing light having a different CCT value. From the perspective of a POSA, the number of CCT values available from Chaimberg's system is limited only by financial considerations.

B. Roberge

73. U.S. Patent No. 7,178,941 ("Roberge") was filed as application no. 10/839,765 on May 5, 2004. Ex. 1011, (21) (22). Roberge claims priority to provisional application No. 60/467,847, filed on May 5, 2003. Ex. 1011, (65). Roberge issued on February 20, 2007 and was initially assigned to Color Kinetics,

Incorporated. *See* Ex. 1017, 1-7. Color Kinetics subsequently assigned Roberge to Philips Solid-State Lighting Solutions, Inc. on September 26, 2007, but Roberge was ultimately assigned to Signify on February 1, 2019. *See id.*, 8-55. Accordingly, Roberge is prior art to the '336 Patent under at least 35 U.S.C. 102(a)(2).

74. Like Chaimberg and the '336 Patent, Roberge discloses a number of LED "[l]ighting methods and systems… [with] … a plurality of LEDs." Ex. 1011, 1:28-31. Roberge discloses a number of embodiments and styles of LED lighting systems, such as the linear light system depicted in Fig. 71 that can be mounted on a "wall, beam, ceiling, or other surface" using the bracket 5850. Ex. 1011, 65:19-23, 66:43-50, Fig. 71. The lighting fixture of Fig. 71 shows a housing 800 that forms a cavity in which the board 204 is located. *Id.*, 66:43-50, Fig. 71. Thus, a POSA would have understood that the lighting fixtures disclosed in Roberge could be installed in ceiling-mounted luminaires such as those disclosed in the '336 Patent and Chaimberg. Roberge states that the board 204 shown in Fig. 71 is a circuit board "supporting a plurality of LEDs," which have been highlighted in yellow in Fig. 71 below. *Id.*, 1:30-31, 19:46-51, Fig. 71. While Fig. 71 shows a housing in a linear shape, Roberge informs us that the "[h]ousings 800 can take various shapes, such as one that resembles a point source, such as a circle or oval. Such a point source can be located in a conventional lighting fixture, such as a lamp or a cylindrical fixture." *Id.*, 17:23-26.

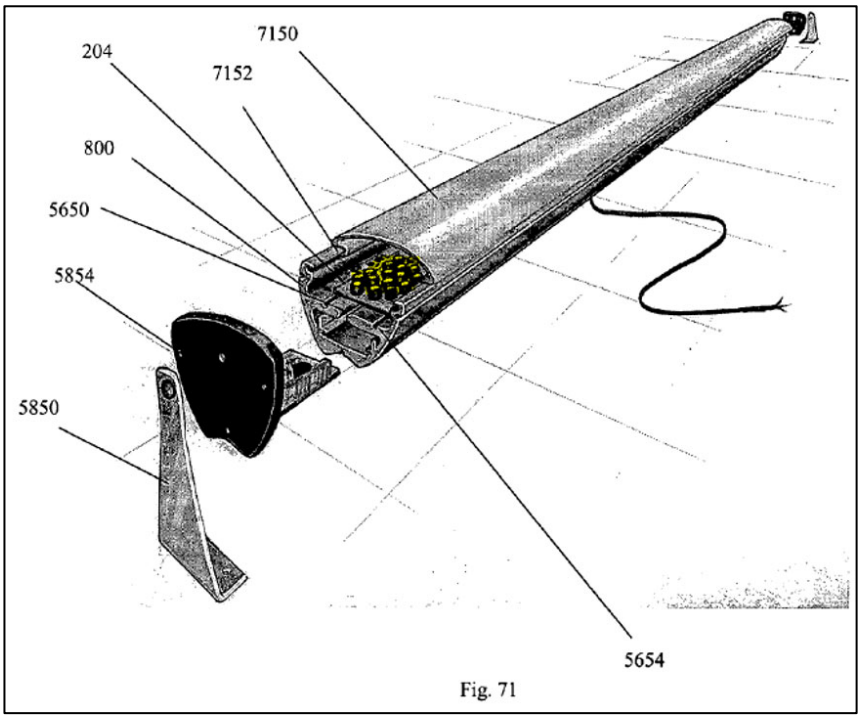

Fig. 71

Id., Fig. 71 (color added).

75. Roberge discloses that its embodiments can include "mixed [LEDs] to allow light of different colors or color temperatures, including color temperatures of white." *Id.*, 7:29-31. Roberge discloses that, like Chaimberg, the LEDs can include "two white sources of varying characteristics, three white sources of varying characteristics, or four or more white sources of varying characteristics." *Id.*, 7:33-36. The "white source can be mixed with, for example, an amber or red source to provide a warm white light or with a blue source to produce a cool white light." *Id.*, 7:36-7:39. The LEDs can be arranged such that the "light generated by two or more of the light sources combines to produce a mixed color light (including essentially white light having a variety of color temperatures)." *Id.*, 7:40-46. Roberge discloses that "[t]he various embodiments described throughout [its] specification encompass

all possible combinations of LEDs in lighting unit 102, so that light of varying color, intensity, saturation and color temperature can be produced on demand." *Id.*, 7:53-60. The lighting systems 100 "may include one or more lighting units 102." *Id.*, 36:34-37. On the basis of these and other statements by Roberge, one concludes that the inventors envisioned (and realized) in 2004 the production of light having a variable or "tunable" CCT. This is precisely the same feature that the '336 Patent wishes to provide nearly 15 years later:

> Need is apparent for a technology to provide a light emitting diode system that can adapt to various applications, for example, by delivering multiple color temperatures.

Ex. 1001, 1:50-53.

76. Like Chaimberg and the '336 Patent, Roberge discloses controls and switches for specifying the CCT of the light produced by the luminaire. For example, Fig. 34i (reproduced below) shows "a dial [that] allows a user to select one or more color temperatures from a scale 3414 [, which can] include different color temperatures of white light." Ex. 1011, 42:51-54. "The lighting designer can specify use of a particular color temperature of light, which the installer can select by setting the right position on the scale 3414 with the dial." *Id.*, 42:54-57. As shown below, the rotary switch of Fig. 34i allows the user to select the following white light LED outputs: 2700 K, 3000 K, 3500 K, 4000 K, 4500 K, 5000 K, 5500 K, 6000 K, 6500 K, 7000 K, and 8000 K. Rotary switches operate in precisely the same manner as a

slide switch except that the switch shaft is simply rotated so as to select the desired CCT value, as opposed to moving the slide of a slide switch in a straight line. Rotary switches have been employed widely in electronic systems for almost a century.

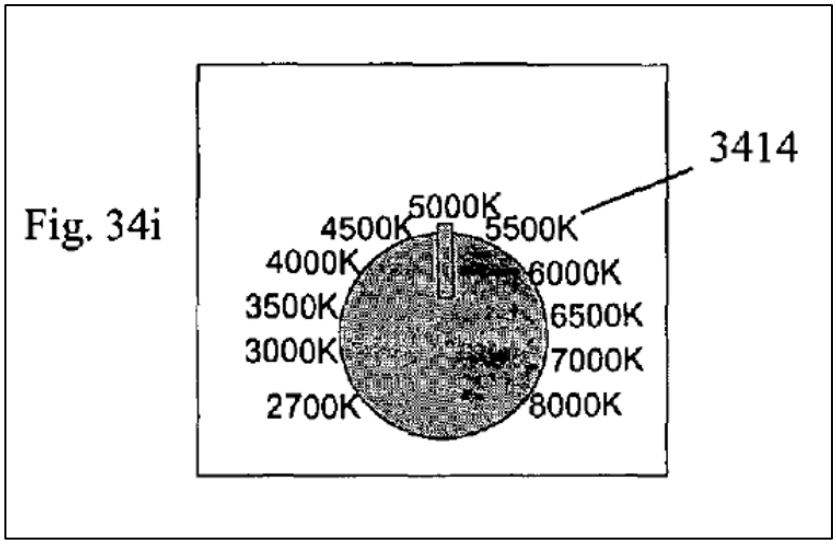

Id., Fig. 34i.

77. While Fig. 34i shows a rotary switch, Roberge discloses that "[a] slide mechanism [*i.e.*, switch] can be used like the dial to set a particular color temperature of white light." *Id.*, 42:57-59. At this point, it should be mentioned that the specific CCT values shown in Fig. 34i of Roberge are simply suggestions, and a POSA would realize quickly that any set of specific CCT values within the capability of white LEDs, or combinations of white LEDs, could be provided to the consumer.

C. Halliwell

78. U.S. Patent No. 9,801,250 ("Halliwell") was filed as Application No. 15/274,575 on September 23, 2016 and issued on October 24, 2017. Ex. 1012,

Cover. Accordingly, I understand that Halliwell is prior art to the ’336 Patent under at least 35 U.S.C. § 102(a)(2).

79. Like the ’336 Patent, Halliwell describes a number of LED lighting devices and lamps. *See* Ex. 1012, Abstract. For example, Halliwell states that its “LED lighting device 20 may be a lighting fixture, a luminaire, … and/or the like.” *Id.*, 6:36-42. In particular, Halliwell’s LED lighting device includes a “device housing 24” that “may be configured to house … one or more LED packages 18…” as shown in Fig. 2 below. *Id.*, 6:51-56.

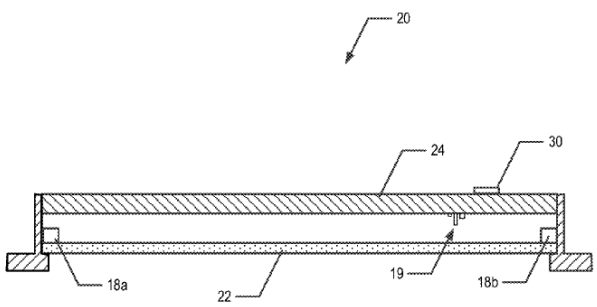

FIG. 2

Id., Fig. 2.

80. Halliwell further discloses that the “electrical components of the LED lighting device 20 (e.g., the driver circuitry 19, switch control unit 35, and/or the like) may be directly wired to line voltage (e.g., through a junction box) or may be configured to be connected to line voltage through a power cord comprising a two-

or three prong polarized plug." *Id.*, 7:8-19. When the electrical components are "directly wired to line voltage" as described by Halliwell, the LED lighting device would necessarily include an electrical cable that is connected to electrical components such as the power supply. *Id.*

81. Figure 4 (reproduced below) is a "block diagram of at least some of the electrical components of [Halliwell's] LED lighting device," including a slide switch for selecting the CCT output of the LED lighting device. *Id.*, 3:26-29, Fig. 4. This exemplary switch 30 includes four positions corresponding to four "color temperature mode[s]," including 3000 K, 4000 K, and 5000 K. *Id*. 12:60-13:14, Fig. 4.

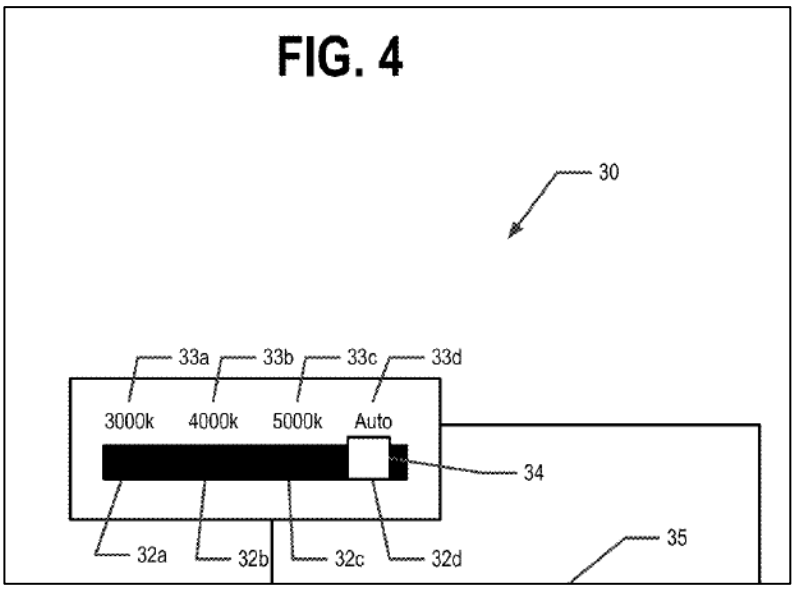

Ex. 1012, Fig. 4.

82. However, the switch in Halliwell's LED lighting device is not limited to four positions. Indeed, Halliwell states that the "switch 30 may comprise a

plurality of switch positions," including "two, three, four, five, six, seven, eight or more switch positions." *Id.*, 11:55-67. Moreover, Halliwell discloses that the LED packages "may be configured to emit light of at least one of 2700K, 3000K, 3500K, 4000K, 5000K, 5700K, 6000K, 7000K, 7500K and/or other color temperatures, as appropriate for the application." Ex. 1012, 7:61-67. Thus, a POSA would have understood that Halliwell's switch, the remaining electrical circuitry and components, and the number and CCTs of the LEDs themselves could easily be chosen to as to support the generation of light having as many values of the CCT as one might wish.

83. Halliwell discloses that the CCT switch can be located remotely from the housing, including as a "junction box mounted toggle switch." Ex. 1012, 17:39-42. Accordingly, a POSA would have understood that Halliwell's LED luminaire could use the switch of Fig. 4 (or many other switches, for that matter) as the "junction box mounted" CCT switch. The slide switch chosen by Halliwell for Fig. 4 is one of many switch types that a POSA could have chosen. Furthermore, the position of the switch within the luminaire (i.e., on the housing, inserted into the power cord, mounted in/on the junction box, etc.) is one of many choices that a POSA must make often. These same decisions have been made for a broad range of electrical products (such as floor lamps, desk lamps, household and industrial fans, audio equipment, etc.) for decades.

D. Reiff

84. U.S. Patent No. 7,192,160 ("Reiff") was filed as Application No. 10/889,411 on Jul. 12, 2004 and issued on March 20, 2007. Ex. 1013, (10), (21), (22), and (45). Accordingly, I understand that Reiff is prior art to the '336 Patent under at least 35 U.S.C. § 102(a)(2).

85. Reiff discloses a number of lighting devices that "include[] fluorescent and/or LED light sources," "wherein the color of the emitted light can easily be switched." Ex. 1013, Abstract. The exemplary lighting device shown in Fig. 2 of Reiff "is a perspective view of an [] embodiment of a light in accordance with the invention," that includes both LED light sources (32) and a fluorescent light source (30). *Id.*, 2:45-46.

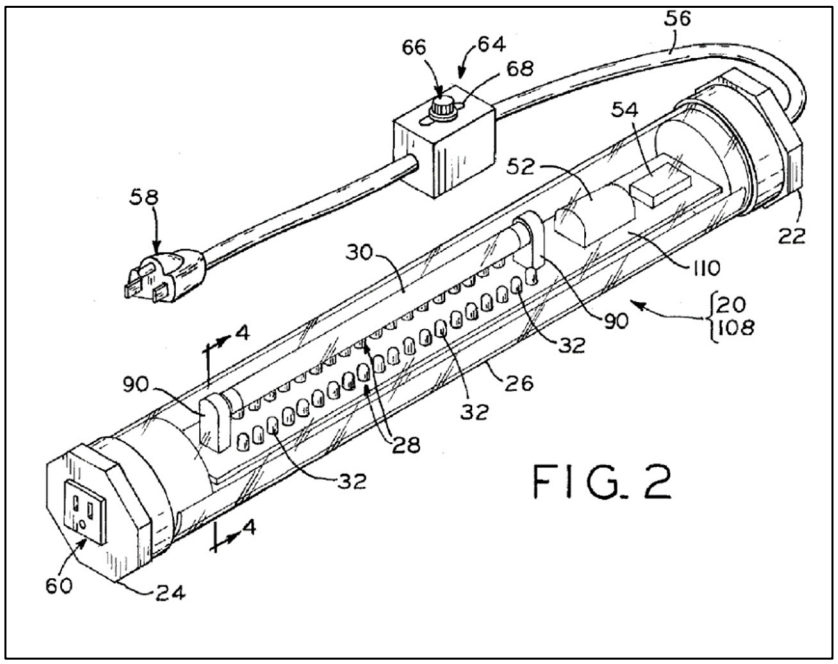

Id., Fig. 2.

86. When Reiff's light "is powered by conventional 120-volt power, electrical cord 56 extends from one end 22 of the light" and has a "plug 58 at a distal end of the cord for insertion into a conventional electrical outlet." *Id.*, 4:16-19. As shown above, Reiff's control box 64 is "[l]ocated along electrical cord 56." *Id.*, 6:18-20. The "control box 64 [] includes a switch [66] for … selecting between the different light sources [28] … [E]ither a regular white light fluorescent light source can be selected, or a 'colored' LED light source can be selected." *Id.*, 4:28-36. As briefly discussed above, Reiff has chosen to insert a control box (containing a switch) into the electrical power cable.

87. With regard to the switch within the control box, Reiff describes the switch as follows: the "switch 66 which is a stepped dimmer switch linearly slidable in slot 68 to select a light source 28." *Id.* "Switch 66 has three positions, one position being the off position as shown in Fig. 2, one position operating the fluorescent lamp and one position operating the LEDS. Switch 66 slides into one of the three positions…" *Id.*, 6:20-24. Reiff also notes that "[e]ach of the light sources emits a different color of light." *Id.*, 2:19-22. Therefore, because the light emitted by the fluorescent lamp has a CCT that is determined by the phosphor, the fluorescent lamp can be chosen to have a CCT value that complements those available from the LEDs. Therefore, a POSA would recognize that two values of the CCT are available with the switch having the configuration shown by Reiff. A POSA would also have

understood that the control box in Reiff includes body for the switch and the piece identified as the switch 66 functions as an actuator.

IX. Ground 1a: Chaimberg Anticipates And/Or Renders Obvious Claims 1, 3, 6-9, 11-13, 15, and 17-19 Of The '336 Patent

A. Claim 1

1. Preamble: "A luminaire comprising"

88. The preamble of claim 1 includes: "[a] luminaire comprising…" Ex. 1001, 14:31.

89. Chaimberg discloses "[a] ceiling mountable LED light fixture." Ex. 1003, Abstract. Figure 1 of Chaimberg illustrates "the LED light fixture of the present invention." *Id.*, 2:51-52. As described above, the terms "light fixture" and "luminaire" are synonymous because both refer to a complete lighting unit. Consequently, a POSA would have understood Chaimberg's LED light fixture to be a luminaire.

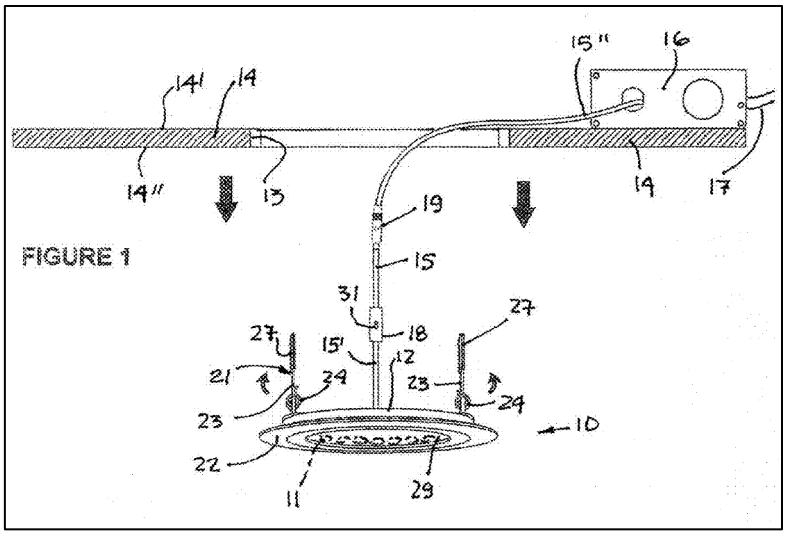

Id., Fig. 1.

90. Therefore, to the extent the preamble is limiting, Chaimberg's LED light fixture is "[a] luminaire."

2. Element 1a: "a housing comprising at least one outer surface that forms a first cavity;"

91. Element 1a requires: "a housing comprising at least one outer surface that forms a first cavity." Ex. 1001, 14:32-33.

92. Chaimberg's LED light fixture includes a "LED light fixture housing 12." Ex. 1003, 3:10-11. Chaimberg's LEDs 11 "are mounted … ***inside*** a wall of the housing 12." *Id.*, 3:3-5 (emphasis added). A POSA would also recognize that Chaimberg's housing forms a "first cavity." As shown in Fig. 1 below, the light fixture includes an unnumbered vertically-oriented, circular retainer "wall" lying above the circumferential flange 22. *Id.*, 3:3-5. All of the LEDs 11 are mounted within or "*inside* a wall of the housing 12." *Id.*, 2:66-3:12, Fig. 1; (emphasis added). Note, too, that the arrow labeled "12" in Fig. 1 appears to point to the circular wall in the illustration.

93. In Fig. 1, reproduced below, both the circumferential wall 22 and the circular, vertically-oriented wall are highlighted for convenience. Both the Fig. 1 drawing and the Chaimberg specification show clearly that the individual LEDs 11 are located inside the housing 12. *Id.*, Fig. 1. Because the LEDs are mounted within

the housing wall, it is apparent that the outer surface(s) of housing 12 "forms a first cavity."

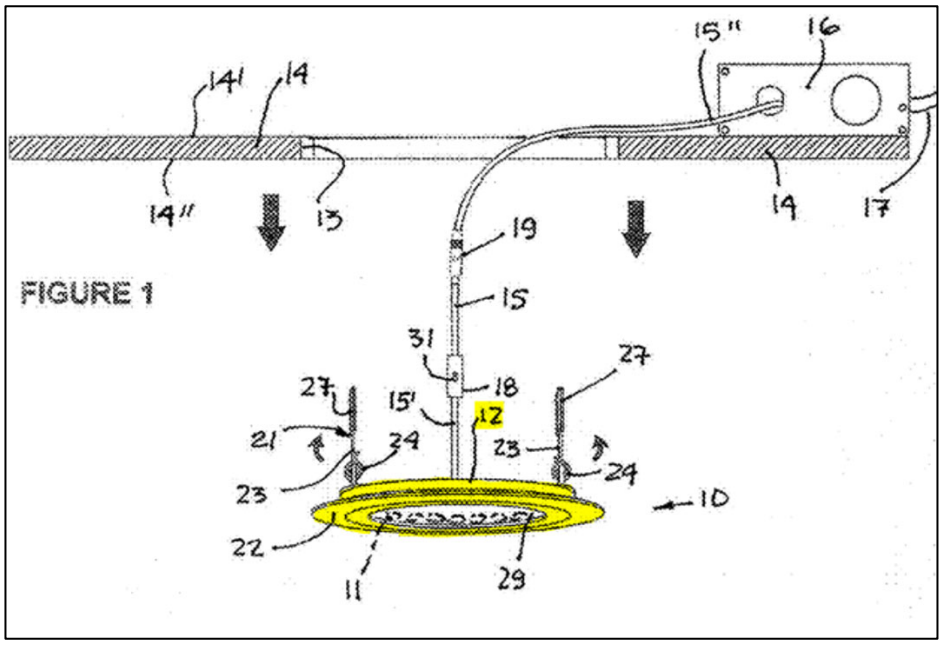

Ex. 1003, Fig. 1 (color added).

94. Thus, Chaimberg's housing 12 is "a housing comprising at least one outer surface that forms a first cavity."

95. Moreover, I understand that in the district court litigation involving the '336 Patent, Patentee Signify has interpreted the "housing" of claim 1 as encompassing a structure nearly indistinguishable from the circular wall and circumferential flange 22 of Chaimberg. A portion of the specific luminaire, and the labels applied by Patentee Signify to that luminaire, are shown in the photographs below. Note that the LEDs are mounted within a "First Cavity" that is bounded by two, orthogonally-oriented surfaces that could be termed walls, flanges, or "lips".

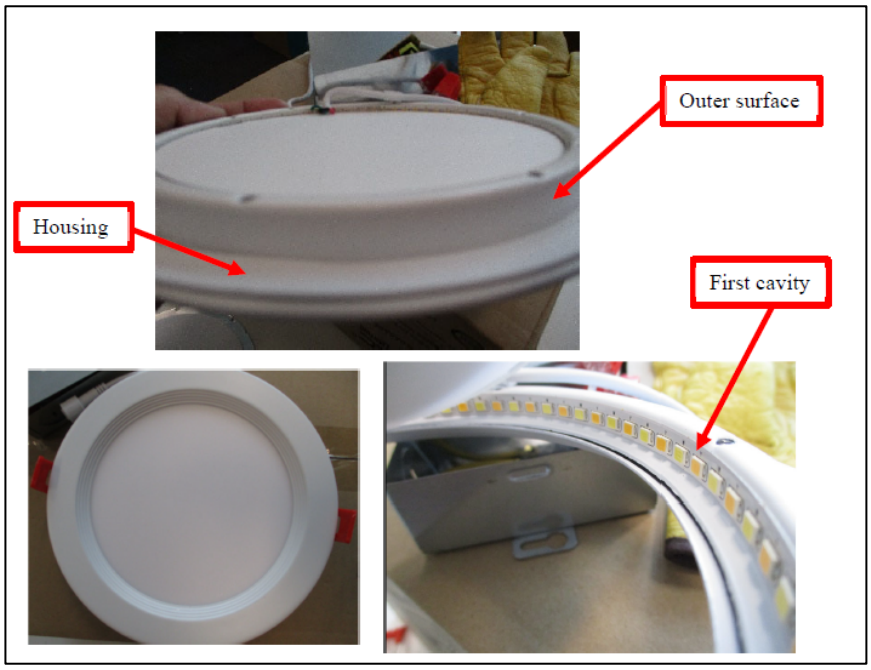

Ex. 1010, 5.

96. Finally, let me mention that the '336 Patent concedes this claim element to have been known in the prior art. Indeed, Fig. 8 (labeled "prior art") depicts a housing 805 with an outer surface that forms a cavity. *See, e.g.*, Ex. 1001, Fig. 8.

3. Element 1b: "at least one electrical component disposed, at least in part, within the first cavity;"

97. Element 1b recites: "at least one electrical component disposed, at least in part, within the first cavity." Ex. 1001, 14:34-35.

98. LEDs are electrically-powered components, so Chaimberg's LEDs 11 are electrical components that "are mounted … inside a wall of the housing 12." Ex. 1003, 3:3-5. Thus, the LEDs 11 are within the first cavity formed by the housing 12 as discussed above with respect to element 1a of claim 1. *Id.* Further, Fig. 1 (reproduced once more below) illustrates the LEDs 11 ("shown in phantom lines")

which are "mounted [] inside a wall of the housing 12"—*i.e.* inside the first cavity of the housing 12. *Id.*, 2:66-3:12, Fig. 1. For the sake of clarity, the LEDs 11 and the outer wall of the housing 12 are highlighted in green and yellow, respectively, in Fig. 1:

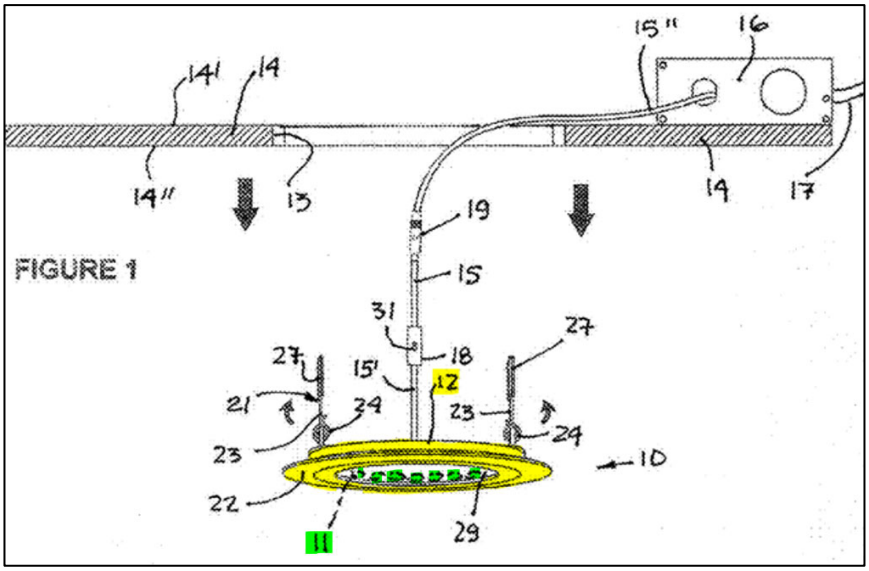

Id., Fig. 1 (colors added).

99. One concludes, therefore, that Chaimberg's LEDs 11 mounted in the housing 12 are "at least one electrical component disposed at least in part, within the first cavity." Further, I understand that in the district court litigation involving '336 Patent, patentee Signify has interpreted the "at least one electrical component" of claim 1 as encompassing LEDs such as those disclosed in Chaimberg:

[1.b] at least one electrical component disposed, at least in part, within the first cavity;	The 349-1292 product includes at least one electrical component disposed, at least in part, within the first cavity. For example, the 349-1292 product includes LEDs disposed within the first cavity. 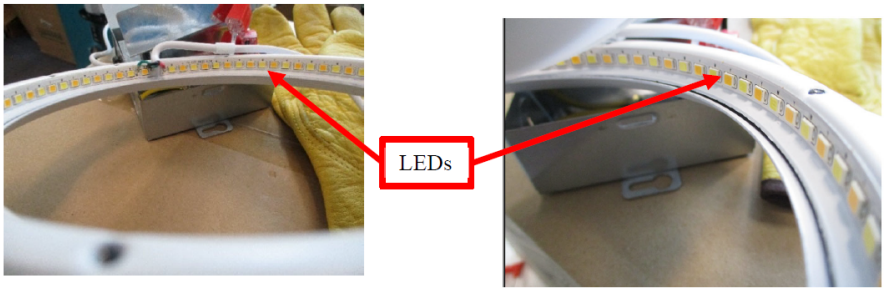

Ex. 1010, 6.

100. Finally, the '336 Patent also concedes that this claim element was known in the prior art. Specifically, Fig. 8 of the '336 Patent, labeled "Prior Art" is described as follows: "Fig. 8 shows another luminaire currently known in the art", and the specification states, in reference to Fig. 8: "One end of the electrical cable 827 is connected to one or more components (*e.g.*, light sources) disposed on and/or within the housing 805 of the luminaire 800." Ex. 1001, 3:24-25, 11:5-12; Fig. 8.

4. Element 1c: "an electrical cable comprising a first end and a second end, wherein the first end is coupled to the at least one electrical component; and"

101. Element 1c recites: "an electrical cable comprising a first end and a second end, wherein the first end is coupled to the at least one electrical component." Ex. 1001, 14:36-38.

102. Chaimberg's LED light fixture includes "a cable 15 [that] is secured at one end 15', to the light housing 12 and has wires therein secured to the two sets of

LED's to supply driving current to each of the sets." Ex. 1003, 3:14-25. "The cable 15 is also secured at a far end 15" to a driver circuit 20 … [which] … is mounted in a driver housing 16 [that] is supplied line voltage from live wire 17." *Id*. Thus, the cable 15 has two ends, and the first end (15') is coupled to the LEDs 11 which are located in the housing 12.

103. In summary, Chaimberg's cable 15 is "an electrical cable comprising a first end and a second end, wherein the first end is coupled to the at least one electrical component." Moreover, the '336 Patent even concedes that this claim element was known in the prior art. Indeed, Fig. 8 (labeled "Prior Art") depicts an electrical cable 827 that is "connected to the one or more [electrical] components (*e.g.*, light sources) disposed … within the housing 805." *See, e.g.*, Ex. 1001, Fig. 8, 11:5-12.

5. Element 1d: "a switch coupled to the electrical cable, wherein the switch is disposed remotely from the housing,"

104. Element 1d recites: "a switch coupled to the electrical cable, wherein the switch is disposed remotely from the housing." Ex. 1001, 14:39-40.

105. Chaimberg's LED light fixture includes a "selector switch 18 [which] is mounted on the cable 15." Ex. 1003, 3:49-54. The switch 18 controls the "color temperature (CCT)" output of Chaimberg's LED luminaire. *Id.*, Abstract. Because the switch 18 is inserted in the electrical cable 15 and manipulation of the switch

causes drive current to be supplied to one or more of the sets of LEDs, it is "coupled to the electrical cable" 15.

106. Chaimberg describes the switch as located "adjacent to the LED light fixture housing," and notes that this layout "provide[s] access to the switch 18 without having to withdraw the driver housing 16 from" the ceiling. *Id.*, 3:49-54. Because the switch is located on the cable 15, it is "disposed remotely from the housing" 12.

107. Figure 1 of Chaimberg shows the location of the switch 18 on the cable 15. *Id.*, Fig. 1. For convenience, the switch 18 has been highlighted in Fig. 1 below. As shown below and noted above, the switch 18 is mounted on the electrical cable 15 and located remotely from the housing 12.

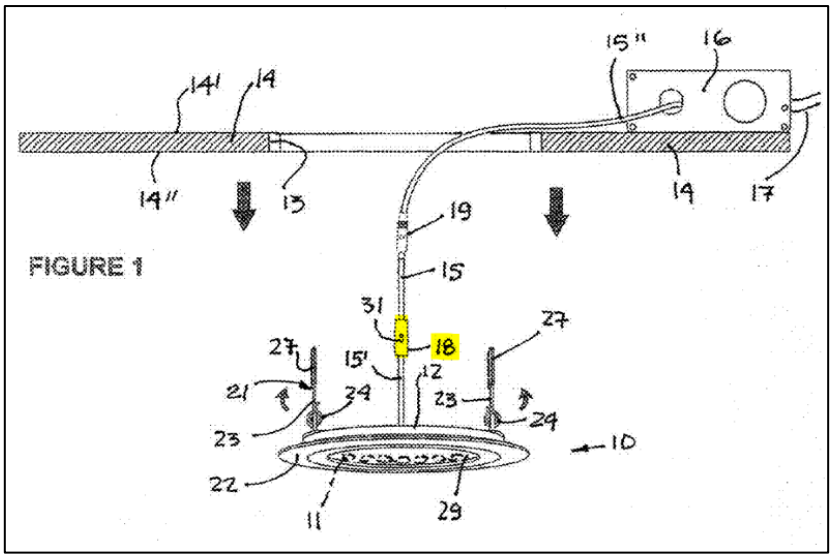

Id., Fig. 1 (color added).

108. Thus, Chaimberg's switch 18 is "a switch coupled to the electrical cable [*i.e.*, cable 15], wherein the switch is disposed remotely from the housing."

6. Element 1e: "wherein the switch has a plurality of positions, wherein each position of the plurality of positions of the switch corresponds to a discrete correlated color temperature (CCT) output emitted by one or more light sources of the luminaire."

109. Element 1e recites: "wherein the switch has a plurality of positions, wherein each position of the plurality of positions of the switch corresponds to a discrete correlated color temperature (CCT) output emitted by one or more light sources of the luminaire." Ex. 1001, 14:40-45.

110. Chaimberg's "switch 18 is a toggle switch provided with a slide button 31 having two conducting arms 32 and 33 and displaceable to three switch positions." Ex. 1003, 4:34-37. When the slide button 31 of the switch 18 is set "[a]t a first position," Chaimberg's LED light fixture emits light at 3000 K (CCT). *Id.*, 4:37-48. When the slide button 31 of the switch 18 is set "to a second position," Chaimberg's LED light fixture produces a light color on the order of "5000 K CCT." *Id.*, 4:49-59. When the slide button 31 of the switch 18 is set to a third position, Chaimberg's LED light fixture "produces a light color of the order of 4000 Kelvin (CCT)." *Id.*, 4:60-5:10. Chaimberg's LED light fixture emits light characterized by a CCT value of 3000 K by powering only a specific set of LED—the 3000 K LEDs 11, and emits light having a CCT value of 5000 K by powering only the 5000 K

LEDs 11. Chaimberg also produces light having an apparent CCT value of 4000 K by powering a combination of the 3000 K and 5000 K LEDs. While the embodiment disclosed by Chaimberg includes LEDs having one of only CCTs (3000 K and 5000 K), the light fixture of Chaimberg includes "at least two sets of LED's of different correlated color temperatures." *Id.*, Abstract.

111. Thus, the slide switch 18 of Chaimberg is a switch "wherein the switch has a plurality of positions, wherein each position of the plurality of positions of the switch corresponds to a discrete correlated color temperature (CCT) output emitted by one or more light sources of the luminaire."

7. Conclusion For Claim 1

112. As described in detail in the preceding sections, Chaimberg satisfies each element of claim 1 of the '336 Patent. Accordingly, Chaimberg anticipates and/or renders obvious claim 1 of the '336 Patent.

B. Claim 3: "The luminaire of claim 1, wherein each position of the plurality of positions is discrete."

113. Claim 3 recites: "[t]he luminaire of claim 1, wherein each position of the plurality of positions is discrete." Ex. 1001, 14:47-48.

114. As discussed above, Chaimberg's "switch 18 is a toggle switch provided with a slide button 31 having two conducting arms 32 and 33 and displaceable to three switch positions." Ex. 1003, 4:34-37. Chaimberg describes three positions for the slide button 31, a "first," "middle," and "right." *See* Ex. 1003,

4:30-63. Accordingly, the three positions of Chaimberg's switch 18 are discrete and correspond to discrete temperature (CCT) outputs.

115. In conclusion, Chaimberg's CCT switch 18 is a switch "wherein each position of the plurality of positions is discrete" and, therefore, Chaimberg anticipates and/or renders obvious claim 3 of the '336 Patent.

1. Conclusion For Claim 3

116. As I have explained in Section IX.A, Chaimberg anticipates and/or renders obvious claim 1 of the '336 Patent. This section has shown that Chaimberg discloses the additional elements of claim 3 of the '336 Patent. Accordingly, Chaimberg anticipates and/or renders obvious claim 3 of the '336 Patent.

C. Claim 6: "wherein the switch is integrated with the electrical cable."

117. Claim 6 recites: "[t]he luminaire of claim 1, wherein the switch is integrated with the electrical cable." Ex. 1001, 14:63-64.

118. As noted above with respect to element 1d of claim 1, Chaimberg's LED light fixture includes a "selector switch 18 [which] is mounted [in/on] the cable 15." Ex. 1003, Abstract, 3:49-54. The switch 18 controls the "color temperature (CCT)" output of Chaimberg's LED luminaire. *Id.*, Abstract.

119. The specification of the '336 Patent states that: "[w]hen the switch 931 is in-line with the electrical cable 927, as in this example [shown in Fig. 9], the switch 931 can be integrated with the electrical cable 927." Ex. 1001, 12:21-23.

Likewise, Figure 1 of Chaimberg shows the location of the switch 18 in line with the electrical cable 15. Ex. 1003, Fig. 1. For convenience, the switch 18 has been highlighted in Chaimberg Fig. 1 below, and the switch 931 has been highlighted in Fig. 9 of the '336 Patent below. To the extent the "switch 931" of the '336 Patent is "integrated with the electrical cable 927" as claimed in claim 6, Chaimberg's switch 18 is likewise "integrated with the electrical cable" 15.

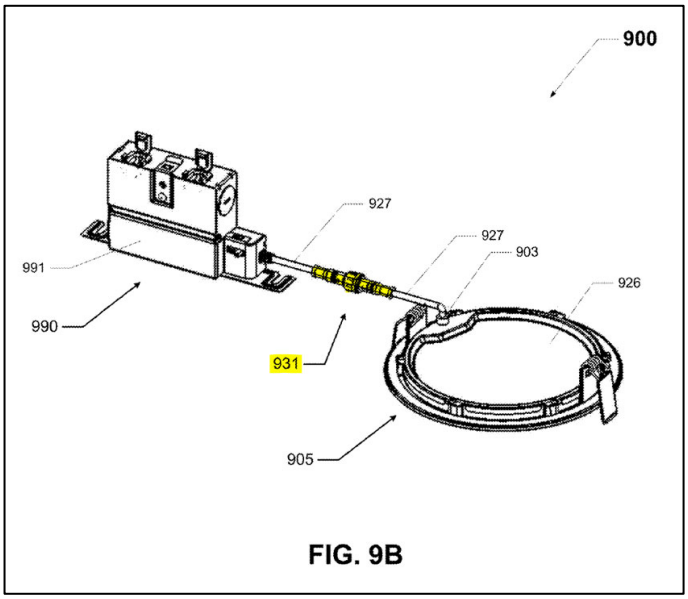

Ex. 1001, Fig. 9B (color added).

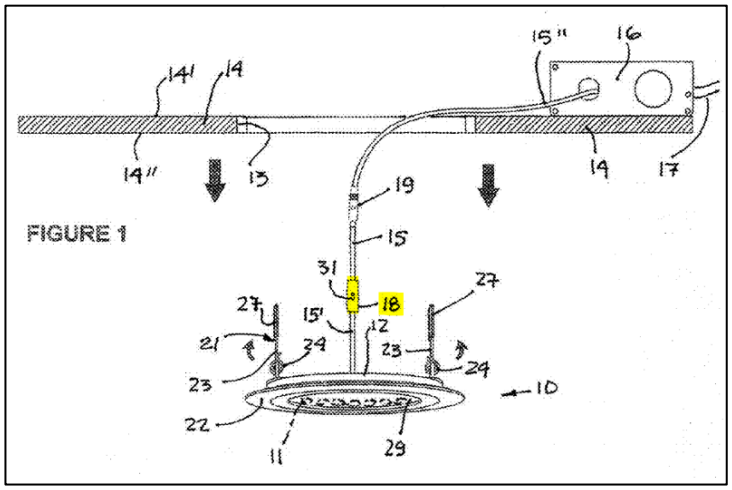

Ex. 1003, Fig. 1 (color added).

1. Conclusion For Claim 6

120. As I have explained in Section IX.A, Chaimberg anticipates and/or renders obvious claim 1 of the ’336 Patent. As I have explained in this section, Chaimberg discloses the additional elements of claim 6 of the ’336 Patent. Accordingly, Chaimberg anticipates and/or renders obvious claim 6 of the ’336 Patent.

D. Claim 7: “The luminaire of claim 1, further comprising: a junction box comprising at least one wall that forms a second cavity, wherein the switch is disposed within the second cavity, wherein the second end of the electrical cable is coupled to the switch.”

121. Claim 7 recites: “[t]he luminaire of claim 1, further comprising: a junction box comprising at least one wall that forms a second cavity, wherein the switch is disposed within the second cavity, wherein the second end of the electrical cable is coupled to the switch.” Ex. 1001, 14:65-15:2.

122. Chaimberg’s LED light fixture includes driver housing 16. Ex. 1003, 4:30-32. Power is supplied to the LED driver circuit 20 by “line voltage from live wire 17.” *Id.*, 3:24-25. Thus, a POSA would have understood that Chaimberg’s driver housing 16 functions as a “junction box” because it is an enclosure, distinct from the luminaire housing, that receives line voltage (“live wire 17”, typically 110 VAC). In particular, the driver housing electrically connects the “live wire 17” to the LED driver circuit 20. Because Chaimberg’s “driver circuit 20 is mounted in a

driver housing 16," the driver housing 16 includes an internal space. *Id.* This internal space within the driver housing 16 constitutes a "second cavity."

123. Figures 1 and 2 of Chaimberg (reproduced below) show the driver housing "mount[ed] behind a ceiling sheet material and spaced from" the LED light fixture housing. *Id.*, 2:25-30. That is, the driver box 16 (highlighted below) is mounted above the ceiling and serves to receive the AC power cable:

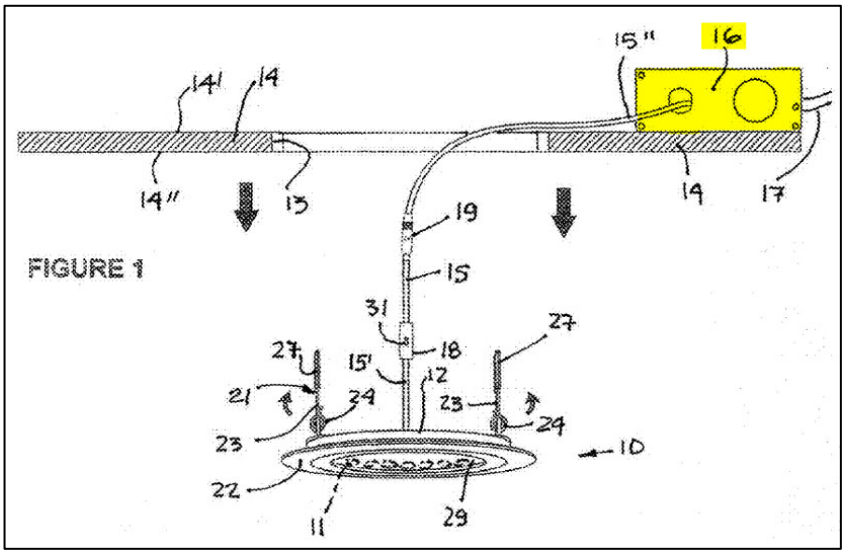

Id., Fig. 1 (color added).

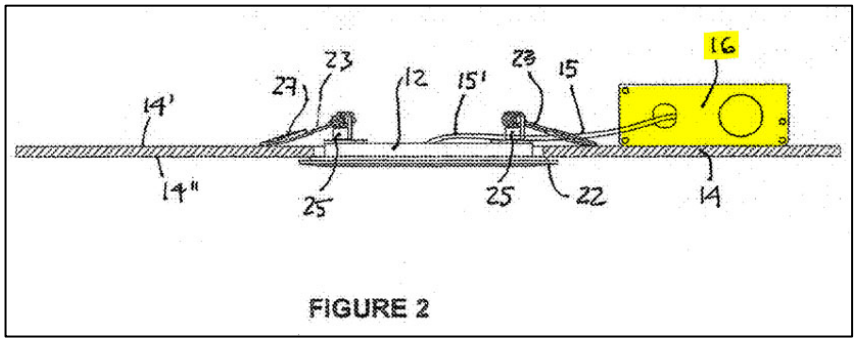

Id., Fig. 2 (color added).

124. The exemplary embodiment described in Chaimberg includes the CCT switch 18 located on the electrical cable 15, and situated between the LED light fixture and driver housing (*i.e.*, junction box). *Id.*, Fig. 1. However, Chaimberg mentions that it was common in prior art to mount a switch "on the driver housing to select a desired color temperature of the LED light fixture" *Id.*, 1:44-50. The switch to which Chaimberg refers is the CCT selection switch discussed earlier. Chaimberg explains that inserting the CCT switch in the electrical cable is preferable to locating it on the junction (or driver) box because the former provides easier access to the switch after installation. *Id.*, 1:44-67. Consequently, Chaimberg specifically acknowledges what was well known—namely, locating the switch at the junction box was common in the prior art, but is not desirable *if* one wishes to provide the customer or service personnel ready access to the CCT switch.

125. Thus, Chaimberg discloses, or at least would have rendered obvious, the condition of Claim 7 that "the switch is disposed within the second cavity" of the junction box. Chaimberg states correctly that it was known in the art to mount a CCT switch "on the driver housing to select a desired color temperature of the LED light fixture." *Id.*, 1:44-50. While Chaimberg does not expressly describe locating the switch 18 *inside* the driver housing—*i.e.*, "within the second cavity" of the junction box, as claimed—a POSA would view the installation of the switch in the driver housing or junction box as being standard for *some* applications. For example,

placing the switch within the junction box could protect the switch from elements like dust, debris, insects, and rodents.

126. A recurring theme in this declaration is the placement of the CCT switch during the installation of a "tunable white" luminaire. It must be emphasized that the choice of switch location by an illumination engineer is, in practice, determined by the industrial, commercial, public, or residential application at hand. As an example, luminaires to be installed in an office building or high-bay commercial building may be designed to produce light having one of two "daylight" CCTs (such as 4000 K and 4500 K). During construction and installation, the decision of lighting designers may be to set the CCT of all luminaires at 4500 K. In this situation, the CCT switches for all luminaires are likely to be installed in a junction or driver box or other inaccessible location. If the decision is made later to lower the CCT for employee or customer comfort, technicians will make the change (as opposed to the user or luminaire customer) and will access the switch in or outside a junction box that has the capability to serve several luminaires.

127. In summary, the CCT switch will be made accessible to luminaire customers only in those situations, such as restaurants, in which one or more changes in the CCT value are expected during the life of the LEDs and the customer is willing to make the necessary change. Placing the switch in the cable between a junction box or power supply and the luminaire allows a commercial or residential customer

to make a CCT change quickly without the assistance of an electrician or a technician.

128. Finally, Chaimberg discloses or at least would have rendered obvious "wherein the second end of the electrical cable is coupled to the switch." As described above for Element 1c of claim 1, the first end of Chaimberg's cable 15 is coupled to the LEDs 11 (*i.e.*, "coupled to the at least one electrical component," as claimed). Connecting the remaining (second) end of the electrical cable to the switch and then connecting the other side (electrical terminal) of the switch to the power source is necessary to have a complete circuit. Chaimberg is not explicit concerning basic aspects of electrical circuits that would have been known to undergraduate students in electrical engineering.

129. Thus, Chaimberg discloses or would have rendered obvious that the CCT switch could be located in or on the driver housing 16. Furthermore, a POSA would have known that locating the switch in a driver housing or a junction box is the best choice in various industrial and commercial settings for which desired changes in the CCT value of the lighting are occasional or rare.

1. Conclusion For Claim 7

130. As I have explained in Section IX.A, Chaimberg anticipates and/or renders obvious claim 1 of the '336 Patent. As I have explained in this section,

Chaimberg also discloses every element of claim 7. Accordingly, Chaimberg anticipates and/or renders obvious claim 7 of the ’336 Patent.

E. Claim 8

131. Claim 8 recites: “[t]he luminaire of claim 1, further comprising: a junction box comprising at least one wall that forms a second cavity, wherein the second cavity has disposed therein at least one additional electrical component; and an additional electrical cable, wherein the switch is coupled to the second end of the electrical cable, wherein the additional electrical cable is coupled to the switch and to the at least one additional electrical component, wherein the switch is disposed outside the second cavity.” Ex. 1001, 15:3-12.

132. As discussed above with respect to claim 7, it would have been obvious for a POSA to locate Chaimberg’s CCT switch on, or in, the driver housing (i.e., junction box). Further, as discussed, Chaimberg’s “driver circuit 20 is mounted in a driver housing 16 to which is supplied line voltage from live wire 17.” Ex. 1003, 3:23-25. The driver circuit would have been “at least one additional electrical component” and the “live wire 17” would function as “an additional electrical cable” as required by claim 8.

133. A POSA would have understood that, Chaimberg’s “live wire 17” is connected to the “driver circuit 20” because it supplies “line voltage” to the driver circuit and LED light fixture. Likewise, because the CCT switch controls the power

provided to the LEDs, it would have been obvious for a POSA to "couple" the live wire to the CCT switch when the CCT switch is located on the driver housing. Figure 3 is a "schematic diagram of the driver circuit," and the specification explains that the switch determines how the driver current supplied by the live wire 17 is distributed to the LEDs. *See id.*, 2:61, 4:30-5:10, Fig. 3.

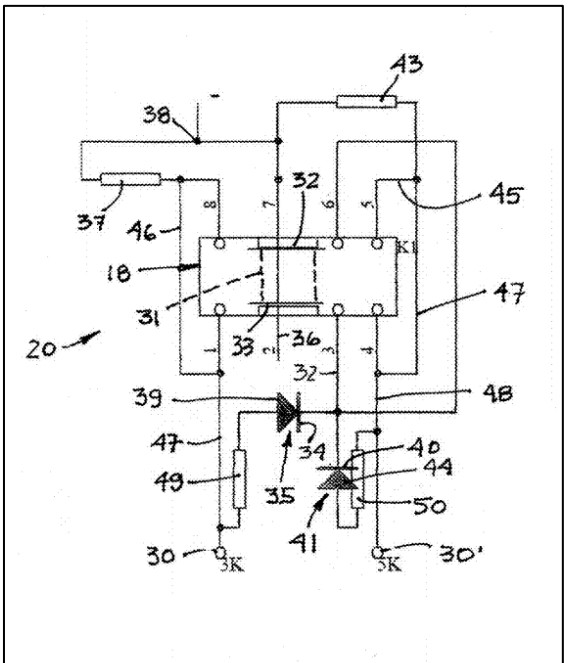

Id., Fig. 3.

1. Conclusion For Claim 8

134. As I have explained in Section IX.A, Chaimberg anticipates and/or renders obvious claim 1 of the '336 Patent. As described in this section, Chaimberg also discloses every element of claim 8. Accordingly, Chaimberg anticipates and/or renders obvious claim 8 of the '336 Patent.

F. Claim 9: "The luminaire of claim 1, wherein the switch is a slide switch."

135. Claim 9 recites: "[t]he luminaire of claim 1, wherein the switch is a slide switch." Ex. 1001, 15:13-14.

136. As discussed above, Chaimberg's switch 18 is described as: "a toggle switch provided with a slide button 31." Ex. 1003, 4:34-37. Thus, a POSA would have understood that Chaimberg's switch 18 is a "slide switch." To the extent that Chaimberg does not explicitly disclose a "slide switch", as I explain above and below, switches, including slide switches have been employed widely in electronic systems for almost a century. Therefore, it would have been obvious for a POSA to use a "slide switch" as Chaimberg's CCT switch 18.

1. Conclusion For Claim 9

137. The discussion of Section IX.A demonstrated that Chaimberg anticipates and/or renders obvious claim 1 of the '336 Patent. As described above, Chaimberg also discloses the additional elements of claim 9. Accordingly, Chaimberg anticipates and/or renders obvious claim 9 of the '336 Patent.

G. Claim 11: "The luminaire of claim 1, wherein the switch is inaccessible when the housing is installed."

138. Claim 11 recites: "[t]he luminaire of claim 1, wherein the switch is inaccessible when the housing is installed." Ex. 1001, 15:17-18.

139. Chaimberg's LED light fixture is "adapted to be removably secured in a housing mounting hole in a ceiling sheeting material." Ex. 1003, Abstract. As

discussed above, Chaimberg's CCT "selector switch 18 is mounted on the cable 15" and is typically located between the light fixture housing 12 and driver housing 16. *Id.*, 3:49-54, Fig. 1. Furthermore, Chaimberg's CCT selector switch 18 "is made accessible and visible by simply withdrawing the light fixture from" the ceiling. *Id.*, Abstract. Because the switch is "made accessible and visible by" withdrawing it from the ceiling, the switch is inaccessible when the LED housing is installed in the ceiling.

140. Chaimberg states: "In Fig. 1, the LED light fixture 10 is shown retracted from its fixture mounting hole." *Id.*, 3:13-15. As shown below, switch 18 (highlighted for convenience) is located on the cable 15 and is accessible to the user when the housing is retracted from the ceiling. *Id.*, Fig. 1.

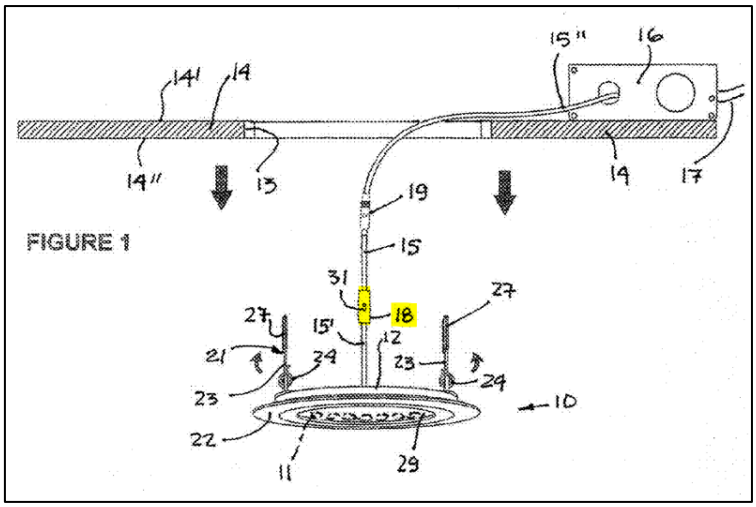

Id., Fig. 1 (color added).

141. Figure 2 is an illustration of Chaimberg's LED light fixture "mounted in the fixture mounting hole." *Id.*, 2:58-61, Fig. 2. I have highlighted the cable 15

in Fig. 2 below. Figure 2 shows that the cable 15 (in which the switch 18 is electrically inserted or "mounted") lies above the ceiling 14. *Id*, 4:16-29, Fig. 2. Therefore, Fig. 2 confirms that the switch 18 is inaccessible when the LED light fixture is installed.

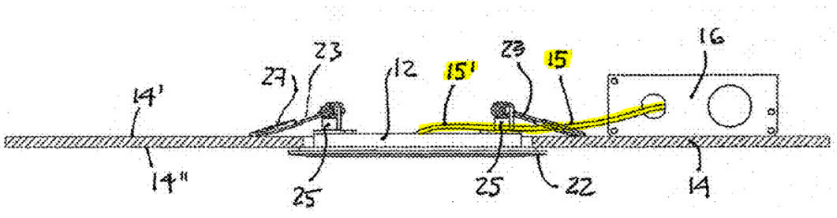

FIGURE 2

Id., Fig. 2 (color added).

142. Thus, Chaimberg's switch 18 is a switch that "is inaccessible when the housing is installed."

1. Conclusion For Claim 11

143. As discussed in Section IX.A, Chaimberg anticipates and/or renders obvious claim 1 of the '336 Patent. Furthermore, the previous five subsections show that Chaimberg discloses the additional elements of claim 11. Accordingly, I have concluded that Chaimberg anticipates and/or renders obvious claim 11 of the '336 Patent.

H. Claim 12: "The luminaire of claim 1, wherein the switch is accessible to a user when the housing is removed from its installed location."

144. Claim 12 recites: "[t]he luminaire of claim 1, wherein the switch is accessible to a user when the housing is removed from its installed location." Ex. 1001, 15:19-21.

145. As discussed above, Chaimberg's LED light fixture is "adapted to be removably secured in a housing mounting hole in a ceiling sheeting material." Ex. 1003, Abstract. Moreover, the CCT "selector switch 18 [which] is mounted on the cable 15" in between the light fixture housing 12 and driver housing 16. *Id.*, 3:49-54, Fig. 1. Chaimberg discloses that its CCT selector switch 18 "is made accessible and visible by simply withdrawing the light fixture from" the ceiling. *Id.*, Abstract.

146. In "Fig. 1, the LED light fixture 10 is shown retracted from its fixture mounting hole." *Id.*, 3:13-15. As shown in Fig. 1 below, Chaimberg's CCT switch 18 (highlighted for convenience) is "accessible and visible" and suspended below the "ceiling sheeting material 14" because the LED light fixture is removed from the ceiling 14. *Id.* at Abstract, 4:16-29. In other words, the switch 18 can readily be reached when the housing is removed from the ceiling.

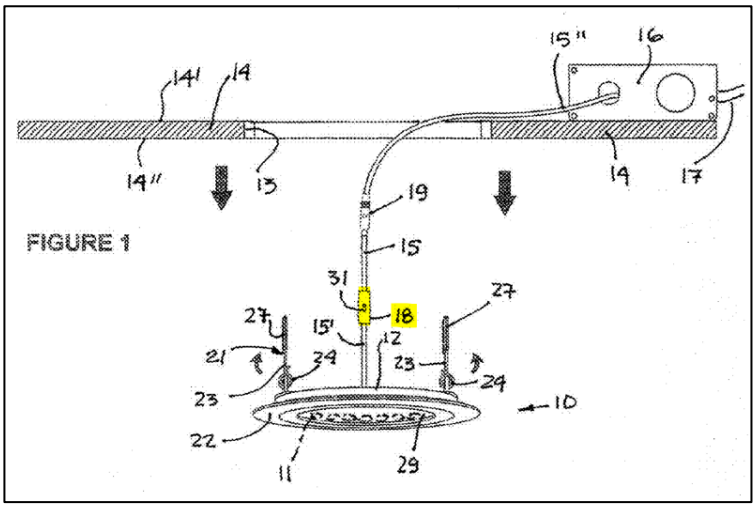

Id., Fig. 1 (color added).

147. Thus, Chaimberg's switch 18 is a switch that "is accessible to a user when the housing is removed from its installed location."

1. Conclusion For Claim 12

148. As explained in Section IX.A, Chaimberg anticipates and/or renders obvious claim 1 of the '336 Patent. Furthermore, the discussion above shows that Chaimberg discloses the additional elements of claim 12. Accordingly, Chaimberg anticipates and/or renders obvious claim 12 of the '336 Patent.

I. Claim 13:

1. Preamble: "A switch for controlling a correlated color temperature (CCT) of light emitted by a luminaire, the switch comprising:"

149. The preamble of claim 13 recites: "[a] switch for controlling a correlated color temperature (CCT) of light emitted by a luminaire, the switch comprising…" Ex. 1001, 15:22-24.

150. Chaimberg's LED light fixture includes a "selector switch 18 [which] is mounted on the cable 15." Ex. 1003, 3:49-54. Chaimberg's CCT switch 18 "permit[s] selective activation of either one of the at least two sets of LED's or both sets of LED's simultaneously to cause the LED light fixture to generate light at a selected desired correlated color temperature (CCT)." *Id.*, 2:41-45.

151. Figure 1 shows the location of the CCT switch 18 which is highlighted in yellow in Fig. 1 below.

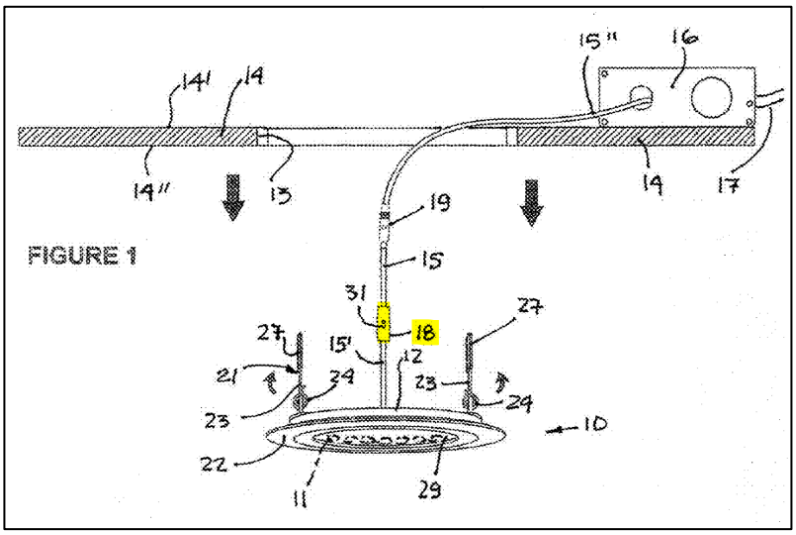

Id., Fig. 1 (color added).

152. Thus, to the extent the preamble is limiting, Chaimberg's CCT switch 18 is "[a] switch for controlling a correlated color temperature (CCT) of light emitted by a luminaire."

2. Element 13a: "a body;"

153. Element 13a requires the switch to have "a body." Ex. 1001, 15:25.

154. Chaimberg's CCT "switch 18 is a toggle switch provided with a slide button 31 having two conducting arms 32 and 33 and displaceable to three switch positions." Ex. 1003, 4:34-37. As discussed earlier in this declaration, Chaimberg describes three discrete positions for the slide button 31: "first," "middle," and "right" positions. *Id.*, 4:30-63. Thus, the switch 18 has a body in which the slide button 31 is located. Fig. 1 shows the CCT switch 18 and slide button 31. Switch 18 is highlighted in yellow, the slide button 31 is highlighted in blue in Fig. 1 below, and the perimeter of the switch "body" is represented by the dashed rectangular box.

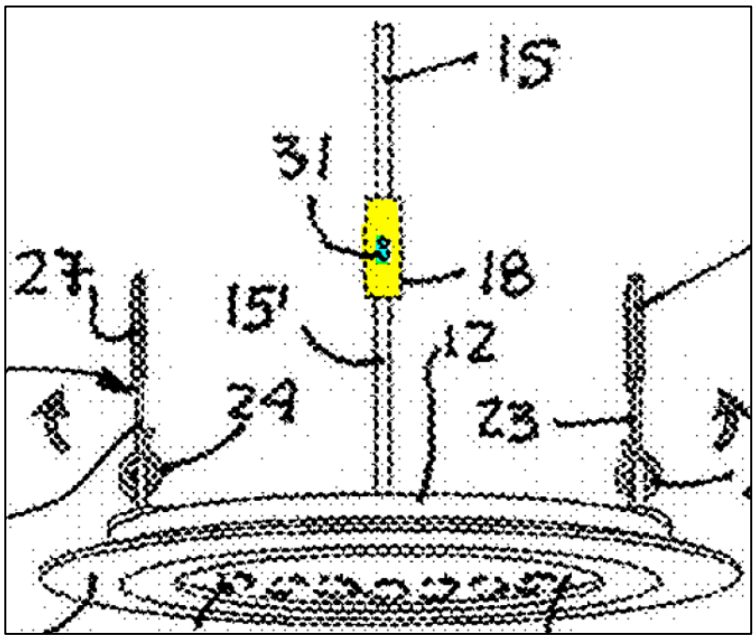

Id., Fig. 1 (cropped and colors added).

155. Consequently, Chaimberg's switch 18 is, indeed, a switch and, like all switches, it has "a body."

3. Element 13b: "at least one first coupling feature disposed on the body, wherein the at least one first coupling feature is

configured to electrically couple to an electrical cable of the luminaire; and"

156. Element 13b of the '336 Patent requires: "at least one first coupling feature disposed on the body, wherein the at least one first coupling feature is configured to electrically couple to an electrical cable of the luminaire; and." Ex. 1001, 15:26-15:29.

157. Chaimberg clearly satisfies this claim element. In particular, Chaimberg states that the "switch 18 is mounted on the cable 15 adjacent to the LED light fixture housing 12." Ex. 1003, 3:49-51. Therefore, Chaimberg requires the "coupling" of switch 18 to cable 15, or "mounting" of switch 18 onto cable 15 by any of the methods by which a switch is electrically connected to a cable or any conductor—namely, terminal connections, a wire pair, pin or tab soldering, compression fittings, etc. In short, the switch of Chaimberg has "at least one first coupling feature disposed on the [switch] body" as Chaimberg implies in Fig. 1 below (with switch 18 again highlighted) by showing the parallel lines, representing the cable perimeter, continue without interruption on both ends of the switch. A POSA would have understood the diagram below to show electrical continuity between the cable 15 and the switch 18.

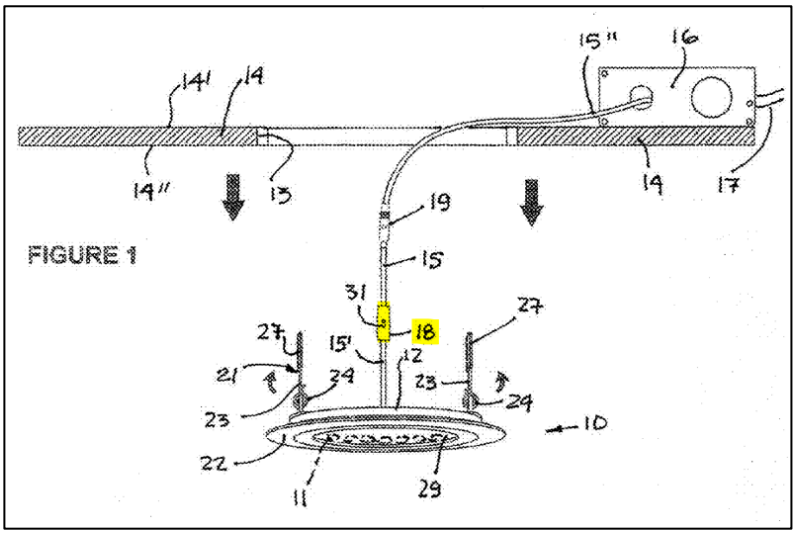

Id., Fig. 1 (color added).

158. As mentioned earlier, Chaimberg's CCT switch 18 "permit[s] selective activation of either one of the at least two sets of LED's or both sets of LED's simultaneously to cause the LED light fixture to generate light at a selected desired correlated color temperature (CCT)." *Id.*, 2:41-45. Because the "activation" mentioned in the previous sentence must be provided by the switch, and must be electrical, then the switch is "electrically couple[d]" to the cable 15. Indeed, the switch 18 is described by Chaimberg as adjusting the power supplied to the LEDs 11 through the cable 15, a feat which would *not* be possible if a "first coupling feature" did not exist on the switch. In fact, the switch would not function at all.

159. Thus, because the CCT switch 18 is mounted on the electrical cable 15 and serves to adjust the CCT output of the LED light fixture, the switch 18 includes "at least one first coupling feature disposed on the body, wherein the at least first

one coupling feature is configured to electrically couple to an electrical cable of the luminaire."

4. Element 13c: "an actuator disposed on the body, wherein the actuator has a range of positions,"

160. Element 13c requires "an actuator disposed on the body, wherein the actuator has a range of positions." Ex. 1001, 16:1-2.

161. As discussed above, Chaimberg's "switch 18 is a toggle switch provided with a slide button 31 having two conducting arms 32 and 33 and displaceable to three switch positions." Ex. 1003, 4:34-37. Chaimberg's slide button 31 acts as an "actuator", allowing one to choose either the "first," "middle," or "right" positions by sliding the "button" with one's finger or thumb. *See* Ex. 1003, 4:30-63.

162. The body of Chaimberg's switch 18, highlighted again in yellow and slide button 31, highlighted again in blue-green, can be seen in Fig. 1 below.

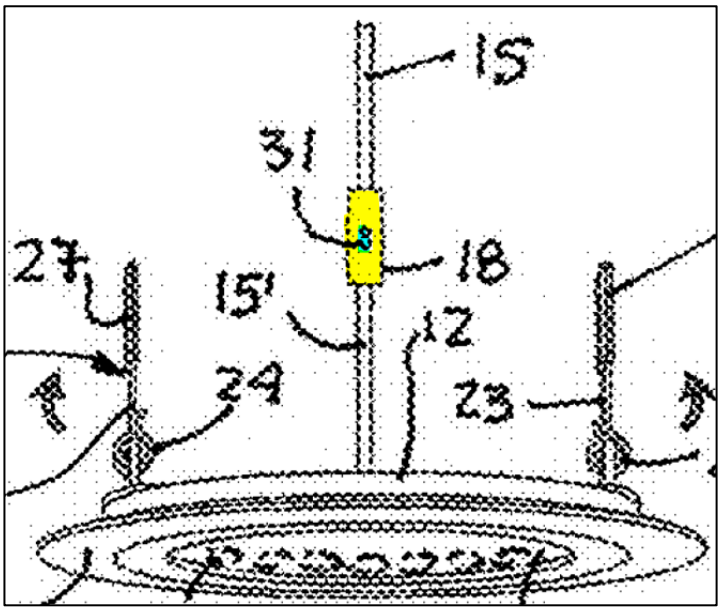

Ex. 1003, Fig. 1 (cropped and colors added).

163. Consequently, Chaimberg's switch has the same structure as all slide switches-namely slide button 31 is "an actuator disposed on the body, wherein the actuator has a range of positions."

164. It should also be mentioned that the '336 Patent also depicts an actuator (673) as a button that the user can slide "along the length" of a slot within the body of a switch (631) (Ex. 1001, 10:17-20) like the slide button disclosed in Chaimberg:

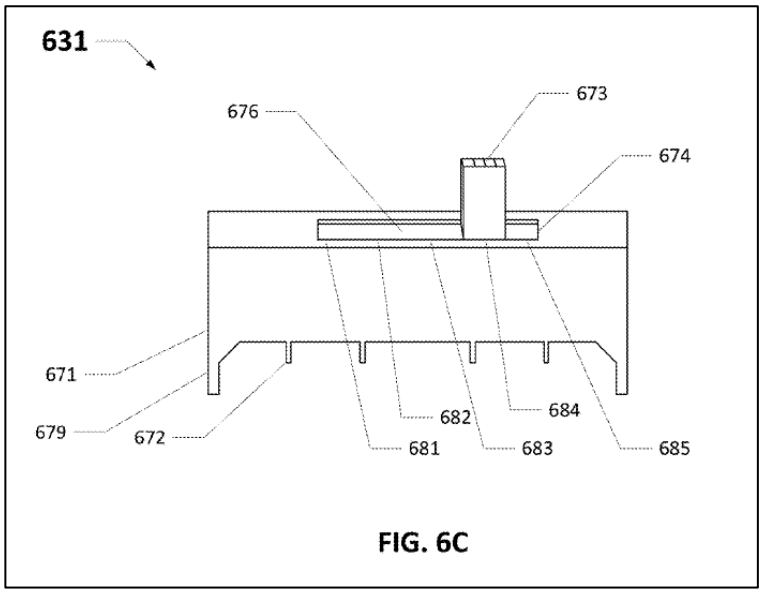

Id., Fig. 6C.

165. The diagram of the slide switch shown in Fig. 6C of the '336 Patent is virtually identical to every other slide switch that has been mass-produced for several decades.

166. I understand that, in litigation involving the '336 Patent, patentee Signify has interpreted the "actuator" of claim 13 as encompassing slide "buttons" such as those disclosed in Chaimberg:

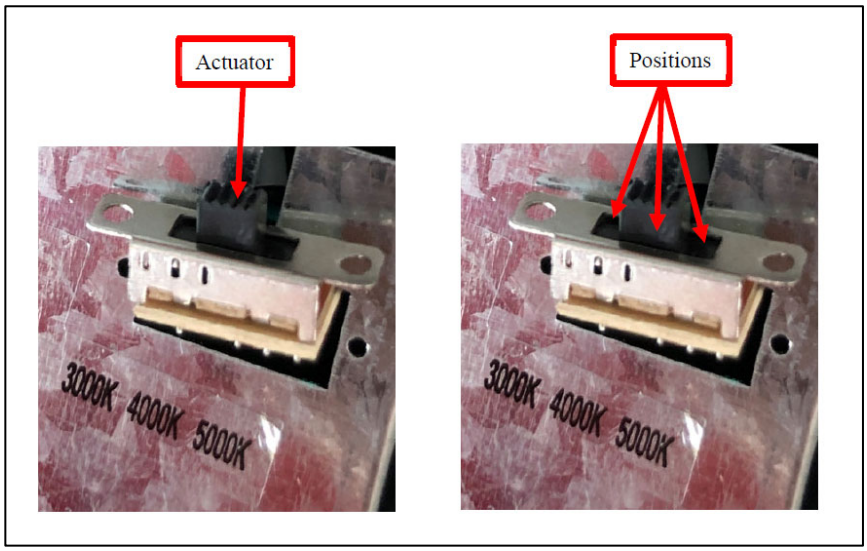

Ex. 1010, 27 (prepared by patentee Signify).

167. Electrical switches are a type of "actuator" that is manually or electrically switched. A slide switch is generally switched manually, as shown by the black plastic slide that has a corrugated surface, as pictured above. A wide range of types of actuators were well known in the art decades before the alleged invention of the '336 Patent. An example of electrically-activated switches in the high-current contact switches that "open" or "close" when the current flowing through a motor reaches a preset value.

168. Finally, it should be reiterated that Chaimberg's switch has three positions: "first," "middle," and "right". These three positions constitute a "range of positions." *See* Ex. 1003, 4:30-63. Accordingly, Chaimberg discloses "an actuator disposed on the body [of the switch 18] wherein the actuator has a range of positions."

5. Element 13d: "wherein each position of the range of positions of the actuator corresponds to a CCT of the light emitted by the luminaire."

169. Element 13d recites: "wherein each position of the range of positions of the actuator corresponds to a CCT of the light emitted by the luminaire." Ex. 1001, 16:3-5.

170. As discussed above, Chaimberg's CCT switch 18 "permit[s] selective activation of either one of the at least two sets of LED's or both sets of LED's simultaneously to cause the LED light fixture to generate light at a selected desired correlated color temperature (CCT)." Ex. 1003, 2:41-45. Each of the three positions of the slide button 31 corresponds to the production of light having a specific CCT value by Chaimberg's LED light fixture. *Id.*, Abstract.

171. Thus, Chaimberg's CCT switch 18 is a switch "wherein each position of the range of positions of the actuator corresponds to a CCT of the light emitted by the luminaire."

6. Conclusion For Claim 13

172. As described in the preceding paragraphs, Chaimberg discloses every element of claim 13 of the '336 Patent. Accordingly, Chaimberg anticipates and/or renders obvious claim 13 of the '336 Patent.

J. Claim 15: "The switch of claim 13, wherein each position is discrete within the range of positions."

173. Claim 15 recites: "[t]he switch of claim 13, wherein each position is discrete within the range of positions." Ex. 1001, 16:8-9.

174. As discussed above, Chaimberg's CCT "switch 18 is a toggle switch provided with a slide button 31 having two conducting arms 32 and 33 and displaceable to three switch positions." Ex. 1003, 4:34-37. Chaimberg describes three positions for the slide button 31: "first," "middle," and "right." *See* Ex. 1003, 4:30-63. The three positions of Chaimberg's CCT switch 18 are discrete and constitute a range of positions.

175. Thus, Chaimberg's CCT switch 18 is a switch "wherein each position of the plurality of positions is discrete within the range of positions."

1. Conclusion For Claim 15

176. As discussed in Section IX.I, Chaimberg anticipates and/or renders obvious claim 13 of the '336 Patent. Furthermore, Chaimberg discloses the additional elements of claim 15. Accordingly, Chaimberg anticipates and/or renders obvious claim 15 of the '336 Patent.

K. Claim 17

177. Claim 17 recites: "[t]he switch of claim 13, further comprising: at least one second coupling feature disposed adjacent to the at least one first coupling

feature, wherein the at least one second coupling feature is configured to electrically couple to an additional electrical cable of the luminaire." Ex. 1001, 16:14-20.

178. As I explained above with respect to claim 8, it would have been obvious for a POSA to implement Chaimberg's CCT switch 18 as a junction box mounted CCT switch, wherein an "additional electrical cable is coupled to the switch." Further, as I explained above with respect to claim 13, Chaimberg's CCT switch necessarily includes multiple coupling features that are "configured to electrically couple to an electrical cable of the luminaire."

179. When Chaimberg's CCT switch is coupled to an additional electrical cable, a POSA would have understood that the CCT switch would necessarily include coupling features that are configured to electrically couple the CCT switch to the additional electrical cable for the same reasons explained above with respect to element 13b of claim 13. Placing the second coupling feature adjacent to the first coupling feature would have been obvious to a POSA and a matter of mere routine design choice.

1. Conclusion For Claim 17

180. As discussed in Section IX.I, Chaimberg anticipates and/or renders obvious claim 13 of the '336 Patent. Furthermore, Chaimberg discloses and or renders obvious the additional elements of claim 17. Accordingly, Chaimberg anticipates and/or renders obvious claim 17 of the '336 Patent.

L. Claim 18: "The switch of claim 13, wherein the body is configured to be integrated with the electrical cable."

181. Claim 18 recites: "[t]he switch of claim 13, wherein the body is configured to be integrated with the electrical cable." Ex. 1001, 16:21-22.

182. As discussed above in Section IX.C with respect to claim 6, Chaimberg discloses and or renders obvious a luminaire "wherein the [CCT] switch is integrated with the electrical cable." There appears to be no substantive distinction between "wherein the body [of the switch] is configured to be integrated with the electrical cable," and "wherein the switch is integrated with the electrical cable." Therefore, for the same reasons presented in Section IX.C, Chaimberg's switch 18 is a switch "wherein the body is configured to be integrated with the electrical cable" as recited in claim 18 of the '336 Patent.

1. Conclusion For Claim 18

183. As discussed in Section IX.I, Chaimberg anticipates and/or renders obvious claim 13 of the '336 Patent. Furthermore, Chaimberg discloses the additional elements of claim 18. Accordingly, Chaimberg anticipates and/or renders obvious claim 18 of the '336 Patent.

M. Claim 19: "The switch of claim 13, wherein the body is configured to be disposed within a junction box."

184. Claim 19 recites: "[t]he switch of claim 13, wherein the body is configured to be disposed within a junction box." Ex. 1001, 16:23-24.

185. As discussed above in Section IX.D with respect to claim 7, Chaimberg discloses and or renders obvious a luminaire with a CCT switch "wherein the switch is disposed within" the junction box. There appears to be no significant distinction between "wherein the body [of the switch] is disposed within" the junction box, and "wherein the body is disposed within" the junction box. Therefore, for the same reasons presented in Section IX.D, Chaimberg's switch 18 is, in my opinion, a switch "wherein the body is configured to be disposed within a junction box."

1. Conclusion For Claim 19

186. As discussed in Section IX.I, Chaimberg anticipates and/or renders obvious claim 13 of the '336 Patent. Furthermore, Chaimberg discloses the additional elements of claim 19. Accordingly, Chaimberg anticipates and/or renders obvious claim 19 of the '336 Patent.

X. Ground 1b: Chaimberg Alone Or In View of Roberge Renders Obvious Claims 2, 4, 5, 10, 14, 16, and 20 of the '336 Patent

A. Motivation To Combine Chaimberg And Roberge

187. Chaimberg and Roberge both disclose LED lighting systems capable of producing white light for which the CCT is adjustable ("tunable"). In particular, both references disclose applying LEDs of multiple color temperatures to the generation of white light having a variety of color temperatures (CCTs), and both references employ any of a wide range of switches to perform the change in CCT.

188. As discussed above in Section VIII.A, Chaimberg discloses "[a] ceiling mountable LED light fixture … wherein at least two sets of LED's of different correlated color temperatures (CCT) are mounted in its housing." Ex. 1003, Abstract. Chaimberg discloses that the CCT "switch 18 is a toggle switch provided with a slide button 31 having two conducting arms 32 and 33 and displaceable to three switch positions." *Id.*, 4:34-37. The three positions on Chaimberg's slide switch 18 correspond to the three white light CCT values of 3000 K, 4000 K, and 5000 K. *Id.*, 4:30-5:10. Chaimberg's LED light fixture emits light having a CCT of 3000 K by powering only the 3000 K LEDs and, similarly, emits 5000 K light by powering only the 5000 K LEDs. *Id*. Light having the intermediate CCT value of 4000 K is produced by powering a mixture of the 3000 K and 5000 K LEDs, with the ratio between their relative numbers dependent upon the relative intensities of the 3000 K and 5000 K LEDs. *Id*. While the embodiment disclosed by Chaimberg only includes LEDs having one of two temperatures (3000 K and 5000 K), Chaimberg also states that its luminaire includes "at least two sets of LED's of different correlated color temperatures." *Id.*, Abstract.

189. In considering Chaimberg, therefore, one skilled in the art would have understood that the luminaire could include additional LEDs having CCTs other than 3000 K or 5000 K. In other words, expanding the number of CCT values available from the luminaire is straightforward. If LEDs of additional CCT values were

incorporated into Chaimberg's LED light fixture, switch 18 would of course require additional switch positions, but a wide variety of switches able to accommodate more positions have long been available. Rotary switches, in particular, are known to conveniently offer multiple positions.

190. In considering other examples of tunable white LED systems and the breadth of switches that can be employed, in particular, one must also mention Roberge. Like Chaimberg, Roberge discloses LED "[l]ighting methods and systems [having] a plurality of LEDs." Ex. 1011, 1:28-31. Roberge states that its LED lights "can be located in a conventional lighting fixture, such as a lamp or a cylindrical fixture," similar to the luminaire described by Chaimberg. *Id.*, 17:23-26. Roberge also discloses that the LEDs can include "two white sources of varying characteristics, three white sources of varying characteristics, or four or more white sources of varying characteristics." *Id.*, 7:33-36. In a manner similar to that described by Chaimberg and the '336 Patent, Roberge selectively arranges and electrically powers LEDs such that the "light generated by two or more of the light sources combines to produce a mixed color light (including essentially white light having a variety of color temperatures)." *Id.*, 7:40-46. For example, Roberge notes that: "Mixing all three sources [of LED light] produces white light, such as along a black body curve 1310. Different mixtures produce different color temperatures of white light along or near the black body curve 2610." *Id.*. 33:29-33. In addition:

"Amber and white light sources can offer a color temperature selectable white source… [T]he color temperature selection is useful for specifying particular color temperature values for the lighting sources." *Id.*, 8:28-34.

B. <u>Color Control In Roberge With Manual *and* Electronic Switches</u>

191. Despite having been filed almost 20 years ago, well before any possible priority date for the '336 Patent, Roberge envisions the control of luminaire color temperature (CCT) by employing a wide variety of both manual and electronic switches. As illustrated by the quotations given in the preceding paragraph, Roberge has the goal of designing lighting systems that generate light having a wide range in CCTs: "Sources 300 may be constructed and arranged to produce a wide range of variable color radiation." *Id.*, 7:40-41.

192. In order to not only control the CCT of light sources, but also intensity and other characteristics, Roberge proposes the introduction of electronic control:

> The methods and systems disclosed herein also include a variety of methods and systems for light control, including central control facilities 3500 as well as control facilities that are local to lighting units 102.

Id., 33:1-4. Both of these control methods—for a single luminaire or a large group of lighting fixtures—employ an electronic switch:

> In embodiments, the lighting control signals are relayed by an Ethernet switch to one or more power/data supplies and are in turn relayed to light systems that are equipped to execute the instructions, such as by turning LEDs on or off,

> controlling their color or color temperature, changing their hue, intensity, or saturation, or the like.

Id., 35:17-22.

193. Despite the introduction of an electronic switch, Roberge also employs the switches mentioned by the '336 Patent and Chaimberg. In describing the electronic "modes" that can be used to control luminaire output characteristics, Roberge states:

> Modes [for lighting control] include white and non-white illumination modes. The modes can be configured in a cycle, so that upon a mode change, the next stored mode is retrieved from memory 3700 and signals for that mode are delivered to the lighting unit 102, such as using a switch, slide, dial, or dimmer.

Id., 38:66-39:3. Roberge notes that this control method need not be sophisticated:

> Referring to FIG. 34 simple interfaces can be used to trigger control signals. Fig. 34a shows a push button 3402 that triggers stored modes when pressed. FIG. 34b and FIG.34c show user interfaces 4908 involving slides 3404 that can change the intensity or color, depending on the mode. . . . FIG. 34d and 34e show dials 3408. The dial can trigger stored modes or adjust color or intensity of light.

Id., 42:11-19.

194. Later, Roberge states: "Referring to FIG. 34i, in embodiments a dial allows a user to select one or more colors or color temperatures from a scale 3414. For example, the scale 3414 can include different color temperatures of white light," where "dial" refers to a rotary switch. *Id.*, 42:51-56. Finally, Roberge states:

> Sources 300 may be constructed and arranged to produce a wide range of variable color radiation. For example, the source 300 may be particularly arranged such that the processor-controlled variable intensity light generated by two or more of the light sources combines to produce a mixed colored light (including essentially white light having a variety of color temperatures).

Id., 7:40-46.

195. In summary, Roberge anticipates the very same control of the color temperature of one or more LEDs through the use of user-actuated switches, such as push buttons, slide switches, or rotary switches (dials). However, the activation of the switch by the user does more than simply energize different sets of LEDs. The "stored modes" triggered by the activation of the switch by the user results in commands sent to the luminaire that might also change the intensity of the light, or its hue: "In various embodiments the slides, switches, dials, dipswitches and the like can be used to control a wide range of variables, such as color, color temperature, intensity, hue, and triggering of lighting shows of varying attributes." *Id.*, 42:35-38. Although Roberge wishes to apply this capability to "lighting shows", a POSA immediately recognizes the potential of combined manual/electronic switch control to varying the characteristics of light generated by luminaires. As the scale of the number of luminaires in an installation rises, the appeal of the common control offered by Roberge grows enormously.

196. Roberge states:

> In embodiments the system 100 can respond to control of a user interface 4908, which may provide control directly to the lighting unit 102, such as through a switch, dial, button, dipswitch, slide mechanism, or similar facility or may provide control through another facility, such as a network interface 4902, a light system manager 5000, or other facility.

Id., 5:27-33. This statement (and others cited above) is clear in emphasizing that changes in the color temperature of LED light sources or intensity or hue, for example, can be achieved with any of the switches cited above which serves as a "user interface".

197. Not surprisingly, Roberge discloses a number of switches so as to generate "white light having a variety of color temperatures." *Id.*, 7:45-46. For example, Fig. 34i of Roberge presents "a dial [that] allows a user to select one or more color temperatures from a scale 3414 [, which can] include different color temperatures of white light." *Id.*, 42:51-54. While Fig. 34i shows a "dial" (rotary) switch, Roberge also discusses a slide switch as follows: "[a] slide mechanism [*i.e.*, switch] can be used like the dial to set a particular color temperature of white light." *Id.*, 42:57-59. A POSA would have understood that the additional CCT values available with Roberge's rotary switch would expand the capability of Chaimberg's slide switch, thereby enabling Chaimberg to produce white light having CCT values beyond those discussed in the specification (3000 K, 4000 K, and 5000 K).

198. For the reasons cited above, the motivation to combine Chaimberg and Roberge is strong.

199. Briefly, Roberge anticipates the very same control of the color temperature of one or more LEDs through the use of user-actuated switches, such as push buttons, slide switches, or rotary switches (dials). Because several switches introduced by Roberge, such as rotary and Ethernet switches, provide a greater range in luminaire light CCT values, for example, a POSA would have been quite motivated to combine Chaimberg and Roberge. The introduction of electronic control of the switches by Roberge, as well as the ability to control other characteristics of the light emitted by one or more luminaires (such as intensity and hue) are additional incentives for a POSA to combine Chaimberg and Roberge.

C. Claim 2: "The luminaire of claim 1, wherein the switch is a dial."

200. Claim 2 recites: "[t]he luminaire of claim 1, wherein the switch is a dial." Ex. 1001, 14:46.

201. As discussed above, Fig. 34i of Roberge shows "a dial [that] allows a user to select one or more color temperatures from a scale 3414[, which can] include different color temperatures of white light." *Id.*, 42:51-54. I further explain in Section X.A why a POSA would have been motivated to adopt *any* one of the switches (and additional LED temperatures) disclosed in Roberge, such as the rotary ("dial") switch of Fig. 34i, in Chaimberg's LED light fixture as a simple design choice. Accordingly, a POSA would have been motivated to modify Chaimberg's switch 18 with "a dial" switch.

Menard v. Signify
Menard Exhibit 1004
Luminex v. Signify
Page 091
Luminex Exhibit 1004
Page 091

1. Conclusion For Claim 2

202. As described in Section IX.A of this report, Chaimberg anticipates and/or renders obvious claim 1 of the ’336 Patent. In addition, the preceding text demonstrates that Chaimberg in combination with Roberge disclose the additional elements of claim 2. Accordingly, Chaimberg in view of Roberge renders obvious claim 2 of the ’336 Patent.

D. Claim 4: “The luminaire of claim 3, wherein the plurality of positions of the switch comprises a first position, a second position, a third position, a fourth position, and a fifth position.”

203. Claim 4 recites: “[t]he luminaire of claim 3, wherein the plurality of positions of the switch comprises a first position, a second position, a third position, a fourth position, and a fifth position.” Ex. 1001, 14:49-52.

204. As discussed above in Section IX.B with respect to Claim 3, Chaimberg’s switch 18 has three positions corresponding to three color temperatures (3000 K, 4000 K, and 5000 K). Chaimberg’s LED light fixture emits light having a CCT value of 3000 K by powering only the 3000 K LEDs, and emits light having a CCT value of 5000 K by powering only the 5000 K LEDs. Chaimberg’s luminaire emits light having an apparent temperature of 4000K by powering a mix of the 3000K and 5000K LEDs. While the embodiment disclosed by Chaimberg accommodates LEDS having only two CCT values (3000 K and 5000 K), Chaimberg does note that its light fixture could include “*at least* two sets of LED’s

of different correlated color temperatures." Ex. 1003, Abstract (emphasis added). Thus, Chaimberg opens the door to luminaires having more than two sets of LEDs, each characterized by a different CCT value.

205. If Chaimberg's LED light fixture incorporated additional LEDs with temperatures other than 3000 K or 5000 K, then switch 18 would require more than three positions. For example, if Chaimberg's exemplary luminaire had included LEDs with three CCT values—2700 K, 3000 K, and 5000 K, for example—it would have been straightforward (and obvious) for someone skilled in the art to purchase a switch 18 having at least two additional positions in order to accommodate the 2700 K light as well as the mixture of 2700 K and 5000 K light. Both slide and rotary switches will readily accommodate five switch positions or more. We should note that the POSA would likely not add an option for the mixture of 2700 K and 3000 K light because the mixture CCT of 2850 K would likely not be distinguishable to the eyes of most individuals.

206. Accordingly, it would have been obvious for a POSA to modify Chaimberg's switch 18 to include a fourth and fifth position.

207. To the extent that modifying the switch 18 with fourth and fifth positions is not disclosed by Chaimberg, Section X.A above explains why it would have been obvious for a POSA to modify Chaimberg's switch 18 with one of the switches of Roberge.

208. As discussed above, Chaimberg discloses an LED-based luminaire that can generate multiple light having selectable color temperature values (CCTs). Roberge likewise discloses LED light fixtures capable of generating light having selectable CCT values. Ex. 1011, 1:28-31, 7:33-36. Embodiments provided by Roberge can, for example, include "two white sources of varying characteristics, three white sources of varying characteristics, or four or more white sources of varying characteristics." *Id.*, 7:33-36. Thus, as discussed above, a POSA would have been motivated to adopt one of the switches described in Roberge, such as the rotary ("dial") switch of Fig. 34i, in Chaimberg's LED luminaire.

209. As discussed above, Fig. 34i of Roberge shows "a dial [that] allows a user to select one or more color temperatures from a scale 3414[, which can] include different color temperatures of white light." *Id.*, 42:51-54. Roberge states that "[t]he lighting designer can specify use of a particular color temperature of light, which the installer can select by setting the right position on the scale 3414 with the dial." *Id.*, 42:54-57. Roberge's rotary switch of Fig. 34i (reproduced below) allows the user to select from the following white light CCT values: 2700 K, 3000 K, 3500 K, 4000 K, 4500 K, 5000 K, 5500 K, 6000 K, 6500 K, 7000 K, and 8000 K. Thus, this CCT switch includes 11 positions, including a first, second, third, fourth, and fifth position. For convenience, these first five positions are numbered in the annotated version of Roberge's Fig. 34i below.

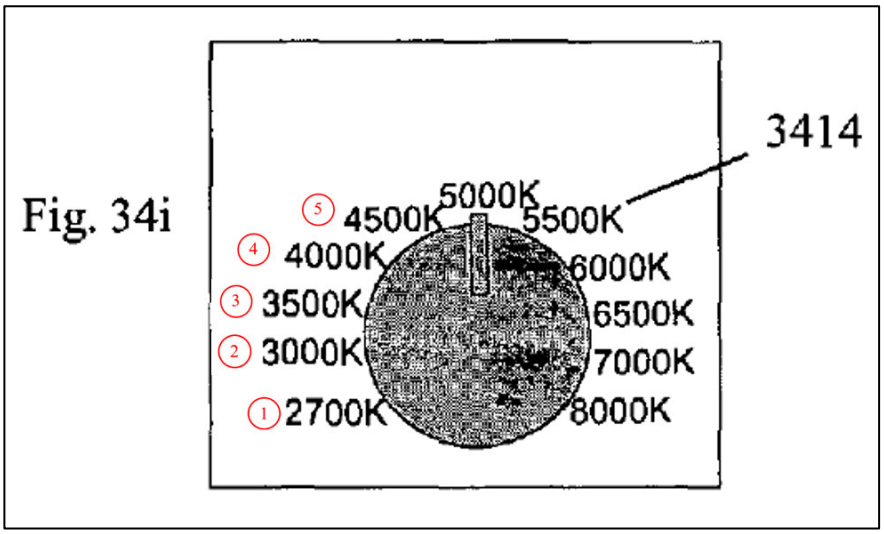

Id., Fig. 34i (annotated).

210. While Fig. 34i shows a "dial" (rotary) switch, Roberge also notes correctly that "[a] slide mechanism [*i.e.*, switch] can be used like the dial to set a particular color temperature of white light." *Id.*, 42:57-59. This additional alternative presented by Roberge provides another incentive for a POSA to incorporate Roberge's switch into Chaimberg's LED luminaire.

211. Accordingly, Roberge's CCT switch "comprises a first position, a second position, a third position, a fourth position, and a fifth position."

1. Conclusion For Claim 4

212. As described in Section IX.B of this report, Chaimberg anticipates and/or renders obvious claim 3 of the '336 Patent. In addition, the preceding text demonstrates that Chaimberg alone and/or in combination with Roberge disclose the additional elements of claim 4. Accordingly, Chaimberg alone, or in view of Roberge, renders obvious claim 4 of the '336 Patent.

E. Claim 5: "The luminaire of claim 4, wherein the first position of the switch corresponds to 2700 Kelvin (K) output by the one or more light sources, wherein the second position of the switch corresponds to 3000 K output by the one or more light sources, wherein the third position of the switch corresponds to 3500 K output by the one or more light sources, wherein the fourth position of the switch corresponds to 4000 K output by the one or more light sources, and wherein the fifth position of the switch corresponds to 5000 K output by the one or more light sources."

213. Claim 5 recites: "[t]he luminaire of claim 4, wherein the first position of the switch corresponds to 2700 Kelvin (K) output by the one or more light sources, wherein the second position of the switch corresponds to 3000 K output by the one or more light sources, wherein the third position of the switch corresponds to 3500 K output by the one or more light sources, wherein the fourth position of the switch corresponds to 4000 K output by the one or more light sources, and wherein the fifth position of the switch corresponds to 5000 K output by the one or more light sources." Ex. 1001, 14:53-62.

214. As discussed above with respect to Claim 4, Chaimberg's switch 18 has a first, second, and third position. When Chaimberg's switch 18 is set in its first position, the LED light fixture produces light having a CCT value of 3000 K. Ex. 1003, 4:34-48. When Chaimberg's switch 18 is set to its second, or "middle" position, the LED light fixture "produces a light color of the order of 4000 Kelvin (CCT)." Ex. 1003, 4:60-5:10. When Chaimberg's switch 18 is set to the third, or

"right" position, the LED light fixture produces a light having a CCT value of 5000 K. Ex. 1003, 4:49-59.

215. As discussed above with respect to Claim 4, a POSA would know immediately to modify Chaimberg's switch 18 to include additional LEDs with different CCT values, if the application under consideration required (or would benefit from) additional CCT values. Such a modification would require additional positions on the switch and is straightforward. For example, if a POSA wished to follow Chaimberg so as to modify the design of a luminaire by adding LEDs having CCT values of 2700K and 4000 K, the POSA would know that it would have been desirable to add at least two additional positions on the switch 18. It must be emphasized that, by adding LEDs having just two additional CCT values, the POSA will recognize that many more "mixed" CCT values now become available. For example, the simplest set of CCT value selections the POSA could offer are: (1) 2700 K (only 2700 K LEDs powered); (2) 3000 K (only the 3000K LEDs powered); (3) 3500 K (a mixture of the 3000 K and 4000 K LEDs powered); (4) 4000 K (only the 4000 K LEDs powered, or a mix of the 3000 K and 5000 K LEDs); and (5) 5000 K (only the 5000 K LEDs powered). However, if the POSA's application concerned residential or commercial lighting (the latter in, for example, in a furniture or interior design business), the POSA might also wish to offer the following combinations: (6) 3250 K (3000 K + 3500 K); (7) 3850 K (2700 K + 5000 K), and so on, none of which

require additional LEDs. My point is that the POSA would have had a number of lighting "tools" available to, in consultation with the customer, provide luminaires providing the light CCT (spectrum) required by the application. Another alternative for the POSA would have been to minimize cost by not providing every CCT in each luminaire but, rather, by separating luminaires by the appropriate distance and dividing all of the necessary CCT values between adjacent luminaires, the desired lighting effect can be achieved by "staggering" the CCT values that are produced by each luminaire.

216. To the extent that modifying the switch 18 with fourth and fifth positions is not disclosed by Chaimberg, Section X.A above explains why it would have been obvious to modify Chaimberg's switch 18 with one of the switches of Roberge. Moreover, as discussed above in Section X.D with respect to claim 4, Chaimberg, in view of Roberge, renders obvious a LED light system having a CCT switch that "comprises a first position, a second position, a third position, a fourth position, and a fifth position."

217. As discussed earlier, the switch of Roberge Fig. 34i includes 11 positions, including a first (2700 K), second (3000 K), third (3500 K), fourth (4000 K), fifth (4500 K), and sixth (5000 K) position. For convenience, FIG. 34i of Roberge is reproduced below:

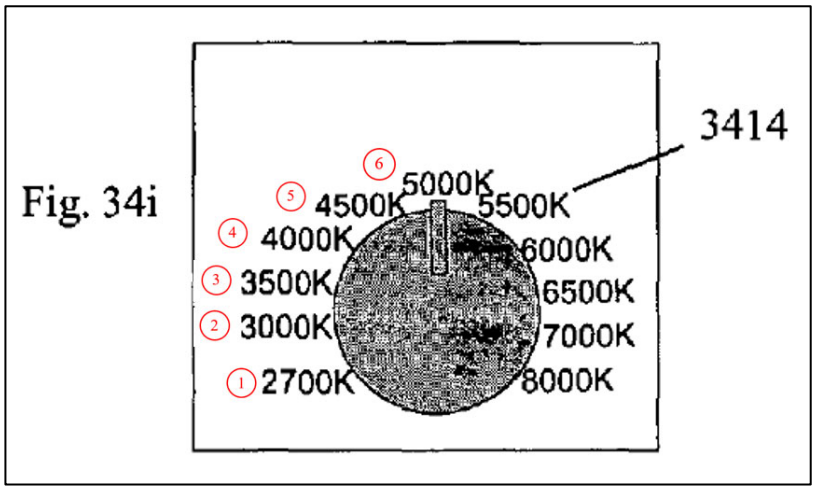

Ex. 1011, Fig. 34i (annotated).

218. While Roberge's fifth position corresponds to the generation of light having a CCT value of 4500 K, and the sixth position corresponds to 5000 K, it would have been obvious for a POSA include any other CCT values required by the application at hand. Indeed, as discussed above, Roberge discloses that the eleven temperatures are exemplary and the "designer can specify a particular setting." Ex. 1011, 42:51-65.

219. Consequently, Roberge's switch, illustrated in Fig. 34i, is a switch wherein the "first position of the switch corresponds to 2700 Kelvin (K) output by the one or more light sources, wherein the second position of the switch corresponds to 3000 K output by the one or more light sources, wherein the third position of the switch corresponds to 3500 K output by the one or more light sources, wherein the fourth position of the switch corresponds to 4000 K output by the one or more light

sources, and wherein the fifth position of the switch corresponds to 5000 K output by the one or more light sources."

220. Before concluding the discussion for Claim 5, a few comments are warranted as to why a POSA would have been motivated to modify Chaimberg to include the generation of light having CCT values of 2700 K and 3500 K. Luminaires producing light having CCT values at and below 3500 K are of particular value for residential and restaurant lighting. It is well-known in the lighting industry that "warm" lighting (i.e., CCT values below approximately 3500 K) is highly-valued by customers, and particularly those in the Americas and Europe. This is the reason that many restaurants in North America (and elsewhere) lower both the intensity and CCT value of the lighting after dusk each evening. Moreover, 2700 K is a common CCT for traditional incandescent bulbs that consumers would have been familiar with.

1. Conclusion For Claim 5

221. As discussed previously in Section X.D, Chaimberg alone, or in view of Roberge, renders obvious claim 4 of the '336 Patent. As explained in this section, Chaimberg and Roberge disclose the additional elements of claim 5. Accordingly, Chaimberg alone or in view of Roberge renders obvious claim 5 of the '336 Patent.

F. Claim 10: "The luminaire of claim 1, wherein the switch is a rotary switch."

222. Claim 10 recites: "[t]he luminaire of claim 1, wherein the switch is a rotary switch." Ex. 1001, 15:14-15.

223. As discussed above, Roberge states "Referring to FIG. 34i, in embodiments a dial allows a user to select one or more colors or color temperatures from a scale 3414. For example, the scale 3414 can include different color temperatures of white light," where "dial" refers to a rotary switch. *Id.*, 42:51-56. Moreover, to the extent Roberge's "dial" is not a rotary switch, as I explained above, rotary switches have been employed widely in electronic systems for almost a century. Therefore, it would have been obvious for a POSA to modify Roberge's "dial" as a rotary switch as claimed in claim 10 of the '336 Patent.

1. Conclusion For Claim 10

224. As described in Section IX.A of this report, Chaimberg anticipates and/or renders obvious claim 1 of the '336 Patent. In addition, the preceding text demonstrates that Chaimberg in combination with Roberge disclose the additional elements of claim 10. Accordingly, Chaimberg alone in view of Roberge renders obvious claim 10 of the '336 Patent.

G. Claim 14: "The switch of claim 13, wherein each position is continuous within the range of positions."

225. Claim 14 recites: "[t]he switch of claim 13, wherein each position is continuous within the range of positions." Ex. 1001, 16:6-7.

226. As discussed above in Sections X.A-B, a POSA would have been motivated to modify Chaimberg to include any of the switches disclosed in Roberge, including the rotary/dial switch disclosed in Roberge Fig. 34i. And, as explained above in Section V.B, the simple switches disclosed in the ’336 Patent were known in the art decades before the alleged invention of the ’336 Patent.

227. While Roberge’s rotary/dial switch disclosed in Fig. 34i includes discrete positions, it would have been obvious for a POSA to modify the switch with continuous positions based on the potential user setting. From a technical perspective, modifying the switch would have been a routine design choice by utilizing a potentiometer in the switch to enable a continuous selection of temperature outputs. From an application perspective, a POSA would have understood that use of a continuous switch as claimed in the ’336 Patent could be useful in a home setting, where a variety of users may want to select custom color temperatures versus the standard pre-set temperatures.

1. Conclusion For Claim 14

228. As discussed in Section IX.I, Chaimberg anticipates and/or renders obvious claim 13 of the ’336 Patent. As explained in this section, Chaimberg and Roberge disclose the additional elements of claim 14. Accordingly, Chaimberg alone or in view of Roberge renders obvious claim 14 of the ’336 Patent.

H. Claim 16: "The switch of claim 15, wherein the range of positions comprises a first position, a second position, a third position, a fourth position, and a fifth position."

229. Claim 16 recites: "[t]he switch of claim 15, wherein the range of positions comprises a first position, a second position, a third position, a fourth position, and a fifth position." Ex. 1001, 16:11-13.

230. As discussed above in Section X.D with respect to claim 4, Roberge's switch is a switch with a range of positions that "comprises a first position, a second position, a third position, a fourth position, and a fifth position."

1. Conclusion For Claim 16

231. As discussed in Section IX.J, Chaimberg anticipates and/or renders obvious claim 15 of the '336 Patent. As explained in this section, Chaimberg and Roberge disclose the additional elements of claim 16. Accordingly, Chaimberg alone or in view of Roberge renders obvious claim 16 of the '336 Patent.

I. Claim 20: "The switch of claim 13, wherein the switch is a rotary switch."

232. Claim 20 recites: "[t]he switch of claim 13, wherein the switch is a rotary switch."

233. As discussed above in Section X.F with respect to claim 10, Chaimberg in view of Roberge renders obvious a luminaire with a CCT switch, "wherein the switch is a rotary switch." For the same reasons discussed above with respect to

claim 10, Chaimberg in view of Roberge renders obvious "[t]he switch of claim 13, wherein the switch is a rotary switch."

(a) Conclusion For Claim 20

234. As discussed in Section IX.I, Chaimberg anticipates and/or renders obvious claim 13 of the '336 Patent. Furthermore, Chaimberg in view of Roberge discloses the additional elements of claim 20. Accordingly, Chaimberg in view of Roberge renders obvious claim 20 of the '336 Patent.

XI. Ground 2: Halliwell Anticipates And/Or Renders Obvious Claims 1, 2-5, 7, 9, 10-13, 15, 16, 19, and 20 of the '336 Patent

A. Halliwell's Switch 30 Would Function As A "Junction Box Mounted" CCT Switch

235. As discussed earlier in Section VIII.C, Halliwell discloses several potential locations for its CCT switch. For example, Halliwell discloses a CCT switch 30 that can be mounted on, or within, the housing of the LED lighting device, as illustrated in Fig. 2 below.

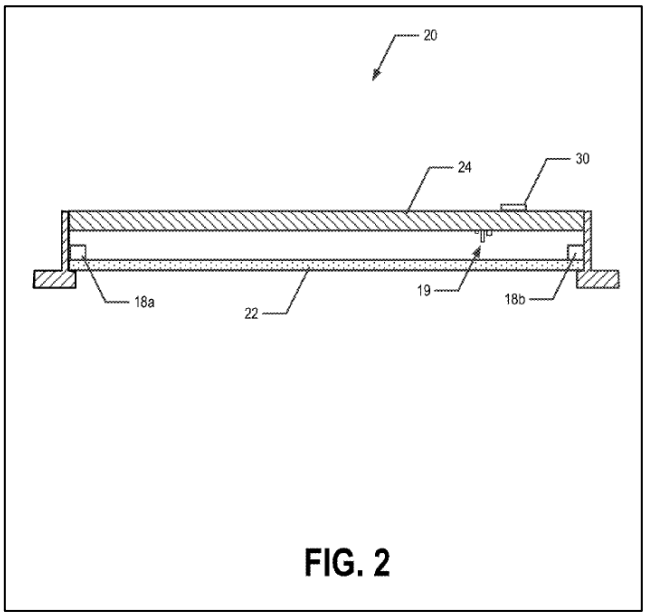

Ex. 1012, Fig. 2.

236. However, Halliwell discloses that its LED lighting device could also employ a remote switch in addition to or in place of a housing-mounted switch. *Id.*, 1:60-67. The remote switch could be "a wall switch, remote control, mobile computing device, and/or the like," or even a "junction box mounted toggle switch." *Id.*, 1:60-67, 17:39-42. While Halliwell discloses a "junction box mounted" CCT switch, it does not describe the mechanisms of the switch in detail. However, Halliwell discloses that the remote switch 40 (similar to switch 30) may include "a slide … button" as an actuator and that the remote switch "may comprise additional user interface components as appropriate for the application." *Id.*, 18:31-41. A POSA would not have required more explanation beyond that supplied by Halliwell. For example, a POSA would have understood that any of the switches discussed by Halliwell, such as the slide switch of Fig. 4 of Halliwell, reproduced below, would

have been "appropriate for the application" of a "junction box mounted" CCT switch:

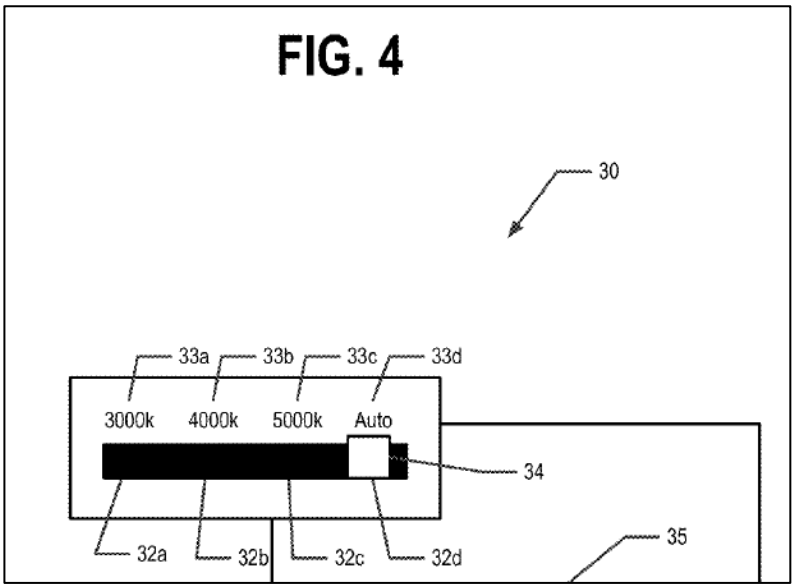

Ex. 1012, Fig. 4 (cropped).

237. Thus, Halliwell explicitly states that the "junction box mounted CCT switch" could be a switch like that disclosed in Fig. 4. To the extent that Halliwell does not disclose using the switch of Fig. 4 as the "junction box mounted" CCT switch, a POSA would not have required that the patent explicitly make the statement because the electrical circuits and components required (switches and cable) are among the most basic in circuits. Instead, a POSA would recognize that switch 30, or a variety of other switches, would have been suitable as the "junction box mounted" CCT switch.

238. These simple switches were known in the art decades before the alleged invention of the '336 Patent. The particular switch illustrated in Fig. 4, a slide

switch, has been discussed at length in this report and is one of the first switches developed, and one of the most extensively developed, by electrical engineers. Any POSA would have understood that such a switch would function as the "junction box mounted" CCT switch in Halliwell. This is further confirmed by Halliwell's disclosure that the "remote switch" (*e.g.*, the "junction box mounted" CCT switch) includes a "remote selector 44 [that] may be a slide … button," like that shown in Fig. 4. Ex. 1012, 18:31-31.

B. Claim 1

1. Preamble: "A luminaire comprising"

239. The preamble of claim 1 recites: "[a] luminaire comprising". Ex. 1001, 14:31.

240. To the extent the preamble of claim 1 is limiting, Halliwell discloses a luminaire. For example, Halliwell discloses a number of LED lighting devices or lamps in a common enclosure. *See* Ex. 1012, Abstract. In particular, Halliwell discloses that its "LED lighting device 20 may be a lighting fixture, a luminaire, … and/or the like." *Id.*, 6:36-42. Accordingly, a POSA would have understood that LED lighting devices disclosed in Halliwell are luminaires.

241. Thus, to the extent the preamble of claim 1 is limiting, Halliwell discloses luminaires.

2. Element 1a: "a housing comprising at least one outer surface that forms a first cavity;"

242. Element 1a recites: "a housing comprising at least one outer surface that forms a first cavity." Ex. 1001, 14:32-33.

243. Halliwell's LED lighting device includes a "device housing 24" that "may be configured to house the driver circuitry 19 … one or more LED packages 18…" Ex. 1012, 6:51-56. The device housing 24 is highlighted in yellow in the reproduction of Fig. 2 below. Note that the device housing 24 forms a cavity housing one or more LEDs 18, the driver circuitry 19, and the device lens 22. *Id.*

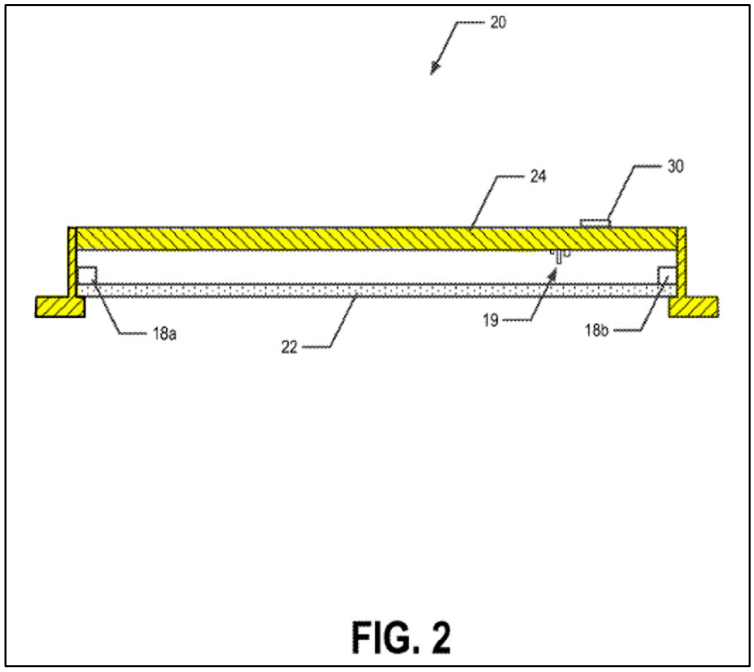

Id., Fig. 2 (colors added).

244. Thus, Halliwell's device housing 24 is "a housing comprising at least one outer surface that forms a first cavity."

245. In addition, it is my understanding that, in the district court litigation involving the ’336 Patent, Patentee Signify has interpreted the “housing” of claim 1 as encompassing a structure nearly indistinguishable from the housing of Halliwell:

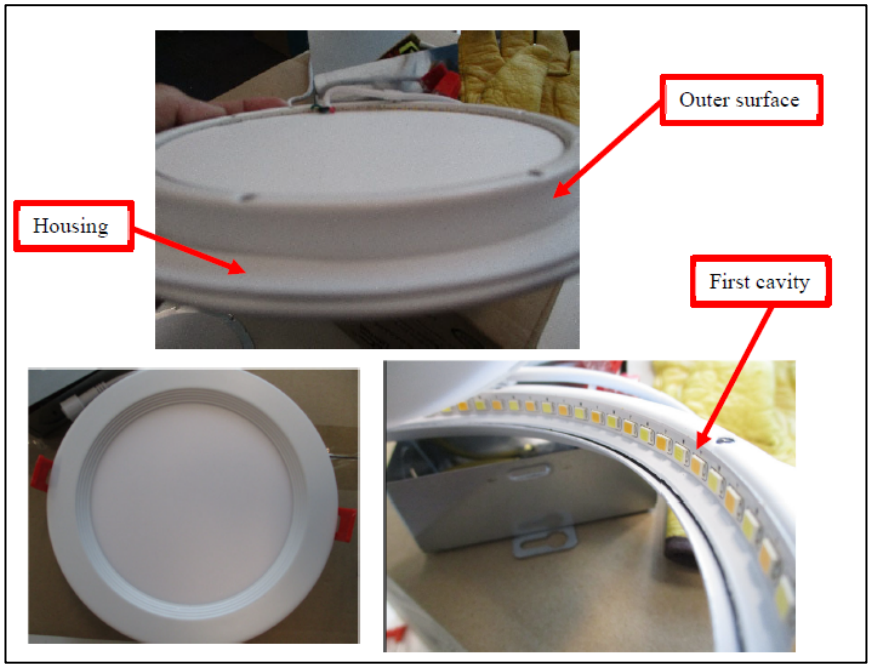

Ex. 1010, 5.

246. Finally, ’336 Patent concedes that this claim element was known in the prior art. For example, Fig. 8 (labeled “prior art”) depicts a housing 805 with an outer surface that forms a cavity. *See, e.g.*, Ex. 1001, Fig. 8.

3. Element 1b: “at least one electrical component disposed, at least in part, within the first cavity;”

247. Element 1b recites: “at least one electrical component disposed, at least in part, within the first cavity.” Ex. 1001, 14:34-35.

248. As discussed above with respect to element 1a, Halliwell’s device housing 24 “may be configured to house the driver circuitry 19 … one or more LED

packages 18…" Ex. 1012, 6:51-56. For example, the "one or more LED packages 18" and driver circuitry 19 are electrical components located within the "first cavity" of the device housing 24. In Fig. 2 reproduced below, the LED packages 18a and 18b are highlighted in blue, the driver circuitry 19 in green, and the housing 24 in yellow. As shown below, the LED packages 18a and 18b and driver circuitry 19 are located within the cavity formed by the device housing 24.

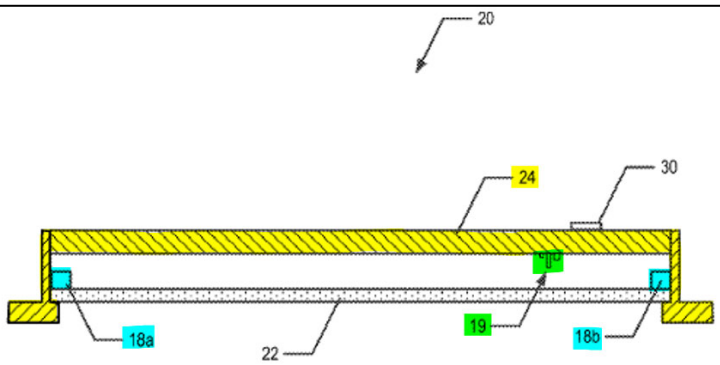

FIG. 2

Id., Fig. 2 (colors added).

249. Thus, Halliwell's LED lighting device includes "at least one electrical component disposed, at least in part, within the first cavity."

250. It is also my understanding that, in the district court litigation involving the '336 Patent, patentee Signify has interpreted the "at least one electrical

component" of claim 1 as encompassing LEDs such as those disclosed in Halliwell. A portion of the Claim chart prepared by Signify is given below:

[1.b] at least one electrical component disposed, at least in part, within the first cavity;	The 349-1292 product includes at least one electrical component disposed, at least in part, within the first cavity. For example, the 349-1292 product includes LEDs disposed within the first cavity. 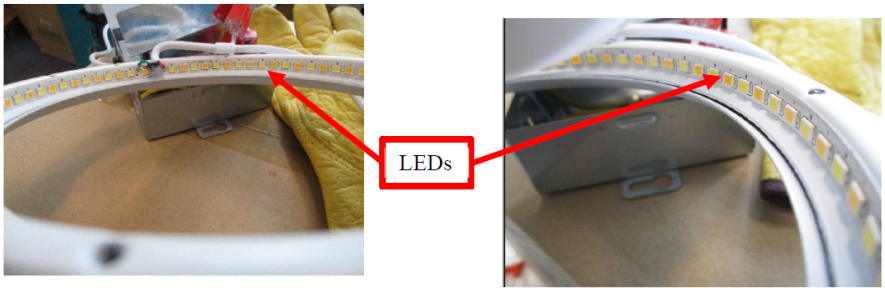

Ex. 1010, 6.

251. Finally, the '336 Patent itself also concedes that this claim element was known in the prior art. Indeed, Fig. 8 (labeled "prior art") is described as a luminaire including "one or more [electrical components (*e.g.,* light sources)] disposed on and/or within the housing 805." *See, e.g.*, Ex. 1001, Fig. 8; 11:5-12.

4. Element 1c: "an electrical cable comprising a first end and a second end, wherein the first end is coupled to the at least one electrical component; and"

252. Element 1c recites: "an electrical cable comprising a first end and a second end, wherein the first end is coupled to the at least one electrical component." Ex. 1001, 14:36-38.

253. Halliwell states that the "electrical components of the LED lighting device 20 (*e.g.*, the driver circuitry 19, switch control unit 35, and/or the like) may

be configured to be directly wired to line voltage (*e.g.* through a junction box)..." Ex. 1012, 7:8-19. Halliwell further discloses that "the remote switch 40 may be a … junction box mounted toggle switch …in wired communication with the switch control unit 35." *Id.*, 17:39-42.

254. A POSA would have understood that since the "electrical components" are "directly wired to line voltage" as described by Halliwell, the LED luminaire would necessarily include an electrical cable that is electrically connected ("coupled") to the electrical components, *e.g.*, the driver circuitry or LED packages 18. Moreover, a POSA would have understood that the cable's conductors (*i.e.*, wires within the cable) would have been coupled to the electrical components (*e.g.*, the driver circuitry 19) located within the housing.

255. Consequently, Halliwell discloses "an electrical cable comprising a first end and a second end, wherein the first end is coupled to the at least one electrical component." Moreover, the '336 Patent concedes that this claim element was also known in the prior art. Indeed, Fig. 8 (labeled "prior art") depicts an electrical cable 827 that is "connected to the one or more [electrical] components (*e.g.*, light sources) disposed … within the housing 805." *See, e.g.*, Ex. 1001, Fig. 8, 11:5-12.

5. Element 1d: "a switch coupled to the electrical cable, wherein the switch is disposed remotely from the housing,"

256. Element 1d recites: "a switch coupled to the electrical cable, wherein the switch is disposed remotely from the housing." Ex. 1001, 14:39-40.

257. As discussed above, Halliwell discloses that its LED lighting device includes a CCT switch for adjusting the CCT value of the light generated by the LED lighting device. *See* Ex. 1012, 12:60-13:14. As one example, Fig. 4 of Halliwell is a "block diagram of at least some of the electrical components of [Halliwell's] LED lighting device," including a switch for adjusting the CCT output. *Id.*, 3:26-29, Fig. 4. As shown below in the cropped version of Fig. 4, the exemplary switch 30 includes four positions corresponding to four "color temperature mode[s]," including 3000 K, 4000 K, and 5000 K. *Id.*, 12:60-13:14, Fig. 4.

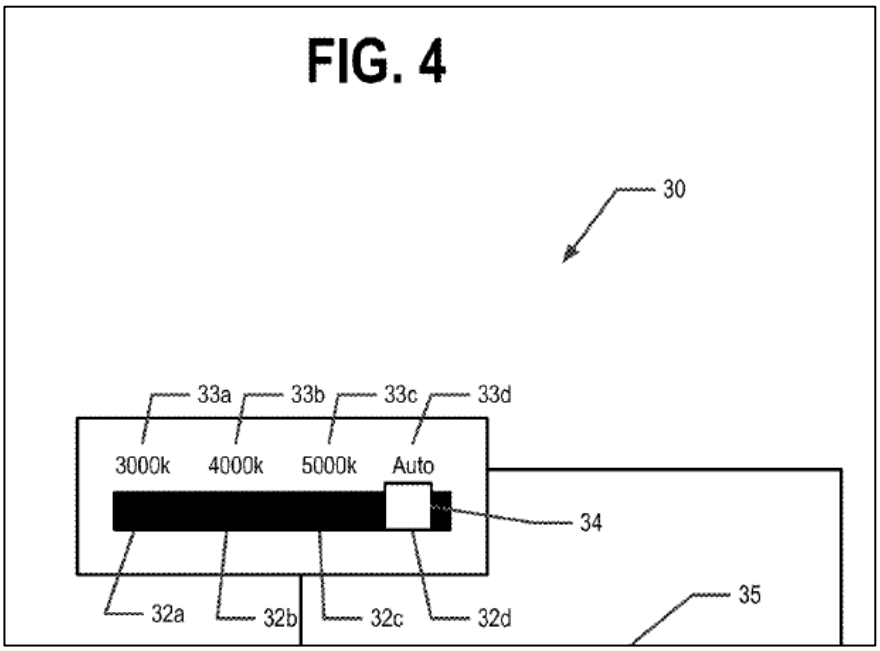

Ex. 1012, Fig. 4 (cropped).

258. Further, Halliwell discloses that its CCT switch can be located remotely from the housing, including as a "junction box mounted toggle switch." Ex. 1012, 17:39-42. As discussed above in Section XI.A, a POSA would have understood that the slide switch of Fig. 4 is a perfectly good candidate as the "junction box mounted" CCT switch.

259. If the CCT switch is mounted in the junction box as described in Halliwell, and the "electrical components" are "directly wired to line voltage" as disclosed in Halliwell and discussed above with respect to element 1c, the "junction box mounted" CCT switch would necessarily be coupled to the electrical cable and disposed remotely from the housing 24.

260. Thus, Halliwell's "junction box mounted" CCT switch is "a switch coupled to the electrical cable, wherein the switch is disposed remotely from the housing."

6. Element 1e: "wherein the switch has a plurality of positions, wherein each position of the plurality of positions of the switch corresponds to a discrete correlated color temperature (CCT) output emitted by one or more light sources of the luminaire."

261. Element 1e recites: "wherein the switch has a plurality of positions, wherein each position of the plurality of positions of the switch corresponds to a discrete correlated color temperature (CCT) output emitted by one or more light sources of the luminaire." Ex. 1001, 14:40-45.

262. As discussed above, Halliwell discloses that its LED lighting device includes a CCT switch for adjusting the CCT output of the LED lighting device. *See* Ex. 1012, 12:60-13:14. As shown below, "the switch 30 may comprise a plurality of switch positions," including "two, three, four, five, six, seven, eight or more switch positions." *Id.*, 11:55-67. The exemplary slide switch shown in Fig. 4 includes four positions that "correspond to set operating color temperature modes with each position corresponding to a particular set operating color temperature," where 3000 K, 4000 K, and 5000 K are indicated specifically on the switch. *Id.* 12:10-15, 13:4-15, Fig. 4. The CCT values (3000 K, 4000 K, and 5000 K) shown in Fig. 4 are discrete. Also, as discussed above, a person skilled in the art of LED lighting design would have understood that Halliwell's LED light fixture could use the switch disclosed in Fig. 4 as the "junction box mounted" CCT switch.

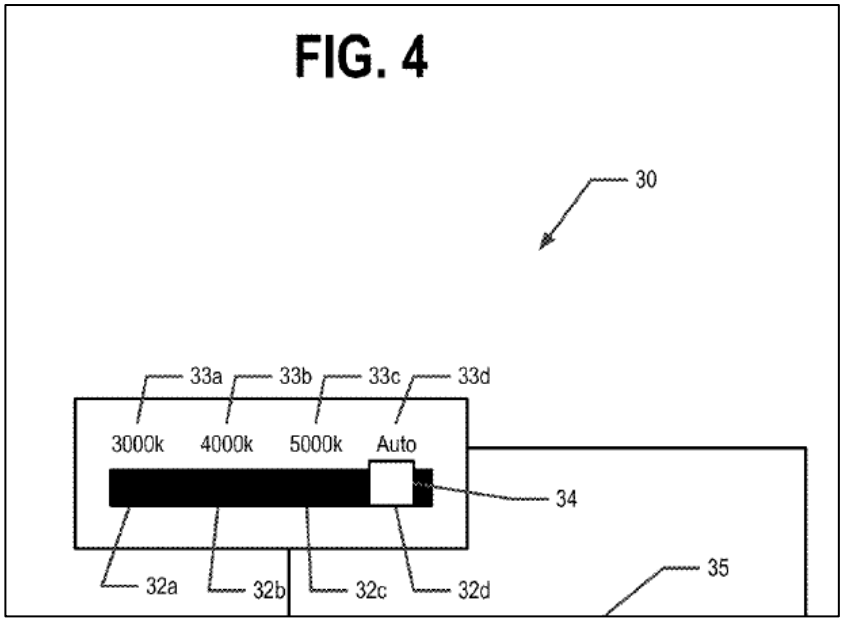

Ex. 1012, Fig. 4 (cropped).

263. To the extent that the "auto" position in the switch 30 of Fig. 4 overlaps with the three other CCTs, as discussed above and below, Halliwell discloses that the switch could be modified with a number of CCTs, "as appropriate for the application." *Id.*, 7:61-67.

264. Thus, Halliwell's "junction box mounted" CCT switch is a switch "wherein the switch has a plurality of positions, wherein each position of the plurality of positions of the switch corresponds to a discrete correlated color temperature (CCT) output emitted by one or more light sources of the luminaire."

7. Conclusion For Claim 1

265. As explained in the section above, Halliwell discloses all elements of claim 1 of the '336 Patent. Accordingly, Halliwell anticipates and/or renders obvious claim 1.

C. Claim 2: "The luminaire of claim 1, wherein the switch is a dial."

266. Claim 2 recites: "[t]he luminaire of claim 1, wherein the switch is a dial." Ex. 1001, 14:46.

267. Halliwell discloses that its CCT switch may be a "dial" or include a "rotary" as an actuator, and that the remote switch "may comprise additional user interface components as appropriate for the application." *Id.*, 18:28-41. As discussed above, A POSA would not have required more explanation beyond that supplied by Halliwell; a POSA would have understood that any of the switches

discussed by Halliwell, such as the dial or rotary switch, would have been "appropriate for the application" of a "junction box mounted" CCT switch.

1. Conclusion For Claim 2

268. As described in Section XI.B of this report, Halliwell anticipates and/or renders obvious claim 1 of the '336 Patent. In addition, the preceding text demonstrates that Halliwell disclose the additional elements of claim 2. Accordingly, Halliwell anticipates and/or renders obvious claim 2.

D. Claim 3: "The luminaire of claim 1, wherein each position of the plurality of positions is discrete."

269. Claim 3 recites: "[t]he luminaire of claim 1, wherein each position of the plurality of positions is discrete." Ex. 1001, 14:47-48.

270. As discussed above, Halliwell's switch "may comprise a plurality of switch positions," including "two, three, four, five, six, seven, eight or more switch positions." Ex. 1012, 11:55-67. Halliwell discloses a CCT slide switch (shown in Fig. 4) that includes four positions which "correspond to set operating color temperature modes with each position corresponding to a particular set operating color temperature," including 3000 K, 4000 K, and 5000 K. *Id*. 12:10-15, 13:4-15, Fig. 4. These positions are discrete and the switch can be set to only one position at a time. Moreover, Halliwell discloses that its CCT switch can be a "junction box mounted" switch as discussed with respect to claim 1 above. *Id.*, 17:39-42. As discussed above, a POSA would also have understood that Halliwell's LED light

fixture could employ the switch illustrated in Fig. 4 as the "junction box mounted" CCT switch.

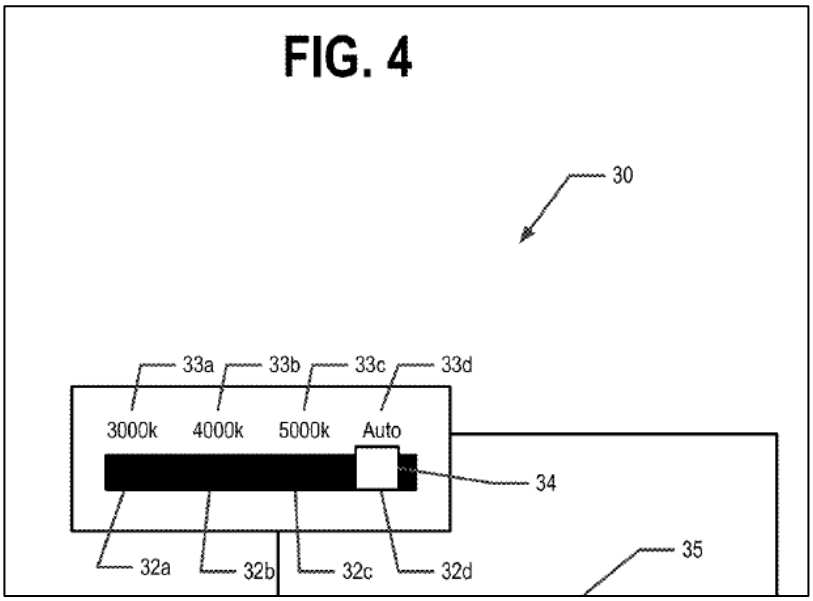

Ex. 1012, Fig. 4 (cropped).

271. Accordingly, Halliwell's "junction box mounted" CCT switch is a switch "wherein each position of the plurality of positions is discrete."

1. Conclusion For Claim 3

272. As explained in Section XI.B, Halliwell anticipates and/or renders obvious claim 1 of the '336 Patent. This section has shown that Halliwell discloses the additional elements of claim 3. Accordingly, Halliwell anticipates and/or renders obvious claim 3 of the '336 Patent.

E. Claim 4: "The luminaire of claim 3, wherein the plurality of positions of the switch comprises a first position, a second position, a third position, a fourth position, and a fifth position."

273. Claim 4 recites: "[t]he luminaire of claim 3, wherein the plurality of positions of the switch comprises a first position, a second position, a third position, a fourth position, and a fifth position." Ex. 1001, 14:49-52.

274. Halliwell discloses that its LED luminaire includes a CCT switch for adjusting the CCT output of the LED lighting device, and that the switch can be a "junction box mounted" CCT switch. *See* Ex. 1012, 12:60-13:14, 17:39-42. The exemplary slide switch of Fig. 4 (which can be used as the junction box mounted CCT switch) includes just four positions that "correspond to set operating color temperature modes with each position corresponding to a particular set operating color temperature," including 3000 K, 4000 K, and 5000 K. *Id*. 12:10-15, 13:4-15, Fig. 4. However, Halliwell discloses that the "switch 30 may comprise a plurality of switch positions," including "two, three, four, five, six, seven, eight or more switch positions." *Id.*, 11:55-67. Accordingly, a POSA would have understood that Halliwell's switch is able to include five or more positions.

275. Thus, Halliwell discloses a CCT switch "wherein the plurality of positions of the switch comprises a first position, a second position, a third position, a fourth position, and a fifth position."

1. Conclusion For Claim 4

276. As explained in Section XI.D, Halliwell anticipates and/or renders obvious claim 3 of the ’336 Patent. This section has also shown that Halliwell discloses the additional elements of claim 4. Accordingly, Halliwell anticipates and/or renders obvious claim 4 of the ’336 Patent.

F. Claim 5: “The luminaire of claim 4, wherein the first position of the switch corresponds to 2700 Kelvin (K) output by the one or more light sources, wherein the second position of the switch corresponds to 3000 K output by the one or more light sources, wherein the third position of the switch corresponds to 3500 K output by the one or more light sources, wherein the fourth position of the switch corresponds to 4000 K output by the one or more light sources, and wherein the fifth position of the switch corresponds to 5000 K output by the one or more light sources.”

277. Claim 5 recites: “[t]he luminaire of claim 4, wherein the first position of the switch corresponds to 2700 Kelvin (K) output by the one or more light sources, wherein the second position of the switch corresponds to 3000 K output by the one or more light sources, wherein the third position of the switch corresponds to 3500 K output by the one or more light sources, wherein the fourth position of the switch corresponds to 4000 K output by the one or more light sources, and wherein the fifth position of the switch corresponds to 5000 K output by the one or more light sources.” Ex. 1001, 14:53-62.

278. As discussed above with respect to claim 4, Halliwell discloses that its “junction box mounted” CCT switch is not limited to four positions. Indeed,

Halliwell states that its CCT switch "may comprise a plurality of switch positions," including "two, three, four, five, six, seven, eight or more switch positions." *Id.*, 11:55-67. Moreover, Halliwell discloses that its LEDs "may be configured to emit light of at least one of 2700K, 3000K, 3500K, 4000K, 5000K, 5700K, 6000K, 7000K, 7500K and/or other color temperatures, as appropriate for the application." Ex. 1012, 7:61-67. Accordingly, a POSA would have understood that Halliwell's LED light fixture could be configured to emit light having five or more values of the CCT, including the first five values listed in Halliwell: 2700 K, 3000 K, 3500 K, 4000 K, and 5000 K. *Id.*

279. A POSA would have understood that if Halliwell's LED light fixture was configured with these five CCT outputs, the CCT switch label of Fig. 4 would have been modified with five positions (as noted in Halliwell), one for each value of the CCT. Therefore, Halliwell discloses that its CCT switch could include five discrete positions corresponding to the following values of the correlated color temperature (CCT): 2700 K, 3000 K, 3500 K, 4000 K, and 5000 K.

280. Thus, Halliwell discloses and/or renders obvious a LED luminaire with a CCT switch "wherein the first position of the switch corresponds to 2700 Kelvin (K) output by the one or more light sources, wherein the second position of the switch corresponds to 3000 K output by the one or more light sources, wherein the third position of the switch corresponds to 3500 K output by the one or more light

sources, wherein the fourth position of the switch corresponds to 4000 K output by the one or more light sources, and wherein the fifth position of the switch corresponds to 5000 K output by the one or more light sources."

1. Conclusion For Claim 5

281. As explained in Section XI.E, Halliwell anticipates and/or renders obvious claim 4 of the '336 Patent. This section has also shown that Halliwell discloses the additional elements of claim 5. Accordingly, Halliwell anticipates and/or renders obvious claim 5 of the '336 Patent.

G. Claim 7: "The luminaire of claim 1, further comprising: a junction box comprising at least one wall that forms a second cavity, wherein the switch is disposed within the second cavity, wherein the second end of the electrical cable is coupled to the switch."

282. Claim 7 recites: "[t]he luminaire of claim 1, further comprising: a junction box comprising at least one wall that forms a second cavity, wherein the switch is disposed within the second cavity, wherein the second end of the electrical cable is coupled to the switch." Ex. 1001, 14:65-15:2.

283. As discussed above, Halliwell discloses that the "electrical components of the LED lighting device 20 (*e.g.*, the driver circuitry 19, switch control unit 35, and/or the like) may be configured to be directly wired to line voltage (*e.g.* through a junction box) or may be configured to be connected to line voltage through a power cord comprising a two- or three prong polarized plug." Ex. 1012, 7:8-19. Thus, Halliwell discloses that its LED luminaire can include a junction box, and a POSA

would have understood that a junction box includes an open space containing wires and other electrical components, *i.e.* a second cavity.

284. Further, as discussed above, Halliwell discloses that "the remote switch 40 may be a … junction box mounted toggle switch …in wired communication with the switch control unit 35." *Id.*, 17:39-42. A POSA would have therefore understood that Halliwell discloses that its CCT switch (including the exemplary switch 30) could be mounted in the junction box, *i.e.* disposed within the cavity of the junction box. This situation is quite common in electrical circuits and those supplying power to electrical systems such as lighting. Further, as discussed above with respect to Chaimberg, a POSA would have recognized additional benefits to placing the CCT switch within the junction box. For example, placing the switch within the junction box could protect the switch from elements like dust, debris, insects, and rodents. Further, in certain applications, a POSA would have been motivated to make the switch less accessible to users or customers.

285. Finally, as discussed in Section XI.A above, since Halliwell's switch is mounted in the junction box (as disclosed in Halliwell) and the "electrical components" are "directly wired to line voltage" as disclosed in Halliwell and discussed above in Section XI.A, the "junction box mounted" CCT switch would necessarily be coupled to the electrical cable and disposed remotely from the housing 24. When the electrical cable ends in the junction box, and the switch is located in

the junction box, a POSA would have understood that the switch would be coupled to the "second end" of the electrical cable.

286. Accordingly, Halliwell renders obvious an LED luminaire "further comprising: a junction box comprising at least one wall that forms a second cavity, wherein the switch is disposed within the second cavity, wherein the second end of the electrical cable is coupled to the switch."

1. Conclusion For Claim 7

287. As explained in Section XI.B, Halliwell anticipates and/or renders obvious claim 1. This section has also shown that Halliwell discloses the additional elements of claim 7. Accordingly, Halliwell anticipates and/or renders obvious claim 7.

H. Claim 9: "The luminaire of claim 1, wherein the switch is a slide switch."

288. Claim 9 recites: "[t]he luminaire of claim 1, wherein the switch is a slide switch." Ex. 1001, 15:13-14.

289. As discussed above, while Halliwell discloses a remotely located CCT switch that is a "junction box mounted toggle switch," a POSA would have understood that Halliwell could include a "junction box mounted" slide switch, like the switch shown in Fig. 4. Ex. 1012, 17:39-42. Furthermore, the switch of Fig. 4 is, indeed, a slide switch ("[t]he switch 30 has been illustrated herein as a slider switch.") *Id.*, 13:43-45. In addition, Halliwell states that when the CCT switch is

remotely located (*e.g.*, in the junction box), the "remote selector … may be a slide … button." *Id.*, 18:31-32.

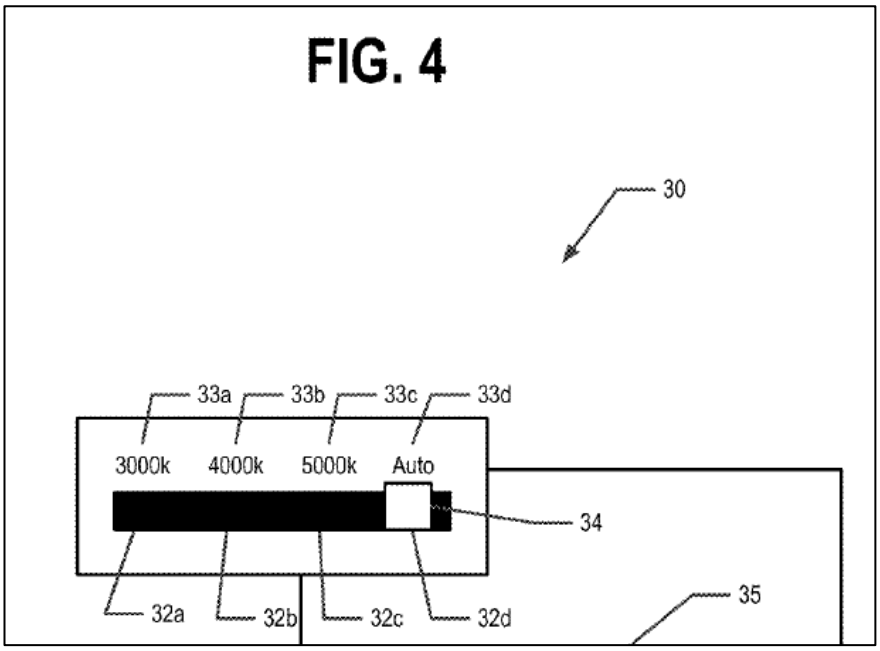

Ex. 1012, Fig. 4 (cropped).

290. Thus, Halliwell discloses and/or renders obvious an LED luminaire "wherein the switch is a slide switch."

1. Conclusion For Claim 9

291. As explained in Section XI.B, Halliwell anticipates and/or renders obvious claim 1. This section has also shown that Halliwell discloses the additional elements of claim 9. Accordingly, Halliwell anticipates and/or renders obvious claim 9.

I. Claim 10: "The luminaire of claim 1, wherein the switch is a rotary switch."

292. Claim 10 recites "[t]he luminaire of claim 1, wherein the switch is a rotary switch." Ex. 1001, 15:14-15.

293. As discussed above, Halliwell discloses that its CCT switch may be a "dial" or include a "rotary" as an actuator, and that the remote switch "may comprise additional user interface components as appropriate for the application." *Id.*, 18:28-41. As discussed above, a POSA would not have required more explanation beyond that supplied by Halliwell; a POSA would have understood that any of the switches discussed by Halliwell, such as the dial or rotary switch, would have been "appropriate for the application" of a "junction box mounted" CCT switch.

1. Conclusion For Claim 10

294. As described in Section XI.B of this report, Halliwell anticipates and/or renders obvious claim 1 of the '336 Patent. In addition, the preceding text demonstrates that Halliwell disclose the additional elements of claim 10. Accordingly, Halliwell anticipates and/or renders obvious claim 10.

J. Claim 11: "The luminaire of claim 1, wherein the switch is inaccessible when the housing is installed."

295. Claim 11 recites: "[t]he luminaire of claim 1, wherein the switch is inaccessible when the housing is installed." Ex. 1001, 15:17-18.

296. As discussed above, Halliwell discloses a remotely located CCT switch that is a "junction box mounted toggle switch" which a POSA would have

understood could include a "junction box mounted" slide switch, like the switch shown in Fig. 4. Ex. 1012, 17:39-42. A POSA would also have understood that because the CCT switch is mounted in the junction box (which would have been mounted in the ceiling), it would have been inaccessible to the user because junction boxes are generally installed in ceilings or on walls behind drywall. Moreover, Halliwell discloses that "a user may select a desired operating light aspects or qualities (e.g., color temperature…) for the … LED lighting device before the … LED lighting device is installed" in a ceiling, confirming that the switch will be inaccessible after the LED lighting device is installed. Ex. 1012, 4:31-35.

297. Thus, Halliwell discloses a luminaire "wherein the switch is inaccessible when the housing is installed."

1. Conclusion For Claim 11

298. As explained in Section XI.B, Halliwell anticipates and/or renders obvious claim 1. This section has also shown that Halliwell discloses the additional elements of claim 11. Accordingly, Halliwell anticipates and/or renders obvious claim 11.

K. Claim 12: "The luminaire of claim 1, wherein the switch is accessible to a user when the housing is removed from its installed location."

299. Claim 12 recites: "[t]he luminaire of claim 1, wherein the switch is accessible to a user when the housing is removed from its installed location." Ex. 1001, 15:19-21.

300. As discussed above, since Halliwell discloses a remotely located CCT switch that is a "junction box mounted toggle switch," a POSA would have understood such a switch to include a "junction box mounted" slide switch, like the switch of Fig. 4. Ex. 1012, 17:39-42. A POSA would have understood that when the junction box and LED light fixture are both installed in a ceiling, the junction box mounted CCT switch would have been inaccessible when the LED light fixture is installed. However, removing the LED light fixture from its installation location would typically render the junction box accessible to the user. This statement assumes that the junction box is in proximity to the luminaire in the ceiling which is usually the case.

301. Accordingly, Halliwell renders obvious an LED luminaire, "wherein the switch is accessible to a user when the housing is removed from its installed location."

1. Conclusion For Claim 12

302. As explained in Section XI.B, Halliwell anticipates and/or renders obvious claim 1. This section also shows that Halliwell discloses the additional elements of claim 12. Accordingly, Halliwell anticipates and/or renders obvious claim 12.

L. Claim 13:

1. Preamble: "A switch for controlling a correlated color temperature (CCT) of light emitted by a luminaire, the switch comprising:"

303. The preamble of claim 13 recites: "[a] switch for controlling a correlated color temperature (CCT) of light emitted by a luminaire, the switch comprising." Ex. 1001, 15:22-24.

304. For example, as discussed above with respect to claim 1, Halliwell discloses that its LED luminaire includes a CCT switch for adjusting the CCT value that describes the spectrum of the light emitted by the LED lighting device. *See* Ex. 1012, 12:60-13:14. As shown below in the cropped version of Fig. 4, the exemplary CCT switch 30 includes four positions corresponding to four "color temperature mode[s]," including 3000 K, 4000 K, and 5000 K. *Id*. 12:60-13:14, Fig. 4.

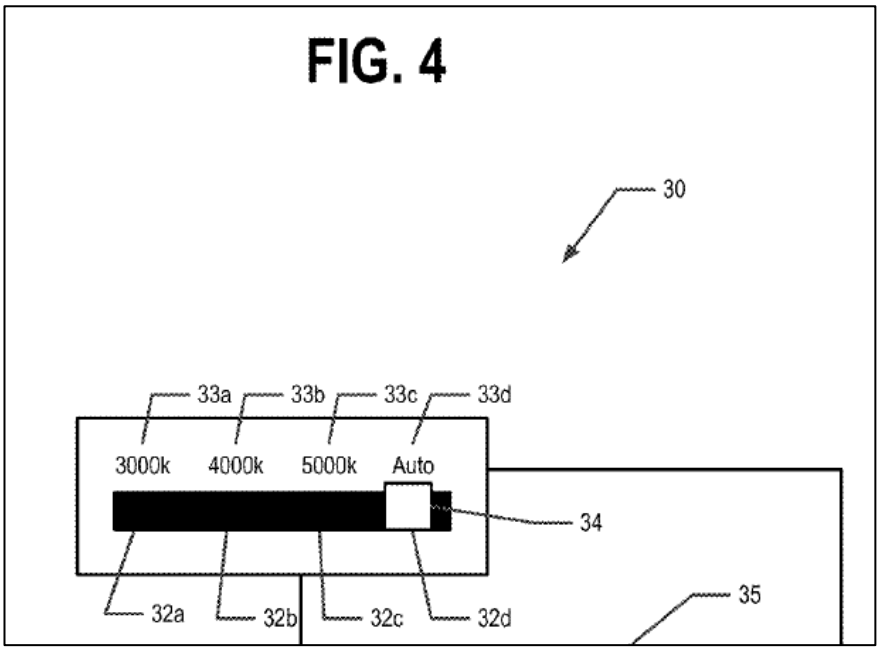

Ex. 1012, Fig. 4 (cropped).

305. As discussed above with respect to claim 1, Halliwell states that the CCT switch can be located remotely from the housing, including as a "junction box mounted toggle switch." Ex. 1012, 17:39-42. Thus, a POSA would have understood that Halliwell's LED light fixture could employ the switch disclosed in Fig. 4 as the "junction box mounted" CCT switch for the reasons discussed above.

306. Accordingly, to the extent the preamble of claim 13 is limiting, Halliwell discloses the required switch.

2. Element 13a: "a body;"

307. Element 13a recites: "a body." Ex. 1001, 15:25.

308. The exemplary CCT switch 30 shown in Fig. 4 includes four positions corresponding to four "color temperature mode[s]," including 3000 K, 4000 K, and

5000 K. *Id*. 12:60-13:14, Fig. 4. The switch includes a body which is highlighted in yellow in Fig. 4 below.

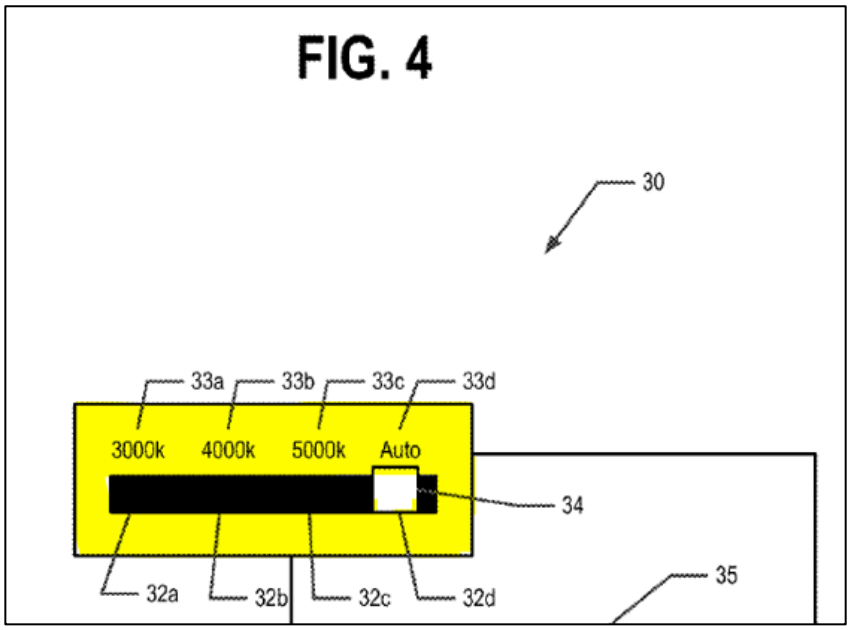

Fig. 4 (color added).

309. Accordingly, Halliwell discloses a CCT switch with "a body."

3. Element 13b: "at least one first coupling feature disposed on the body, wherein the at least one first coupling feature is configured to electrically couple to an electrical cable of the luminaire; and"

310. Element 13b recites: "at least one first coupling feature disposed on the body, wherein the at least one first coupling feature is configured to electrically couple to an electrical cable of the luminaire." Ex. 1001, 15:26-15:29.

311. As discussed above with respect to claim 1, Halliwell discloses that its CCT switch can be located remotely from the housing, including as a "junction box mounted" CCT switch. Ex. 1012, 17:39-42. Consequently, as described in previous

sections, a POSA would have understood that Halliwell's LED luminaire could use the switch disclosed in Fig. 4 as the "junction box mounted" CCT switch.

312. As discussed above with respect to claim 1, Halliwell also discloses that the "electrical components of the LED lighting device 20 (*e.g.*, the driver circuitry 19, switch control unit 35, and/or the like) may be configured to be directly wired to line voltage (*e.g.* through a junction box) or may be configured to be connected to line voltage through a power cord comprising a two- or three prong polarized plug." Ex. 1012, 7:8-19. A POSA would have understood well that when the "electrical components" are "directly wired to line voltage" as disclosed in Halliwell, the LED luminaire would necessarily include an electrical cable that electrically connects ("couples") the luminaire and junction box. If the CCT switch is mounted in the junction box as described by Halliwell, and the "electrical components" are "directly wired to line voltage" as disclosed in Halliwell, the "junction box mounted" CCT switch would necessarily be electrically connected to the electrical cable. Moreover, Halliwell Figure 4 includes a diagram of "at least some of the electrical components" of Halliwell's LED lighting device, and further demonstrates that the switch would necessarily include one or more coupling features to electrically couple the switch to the wire.

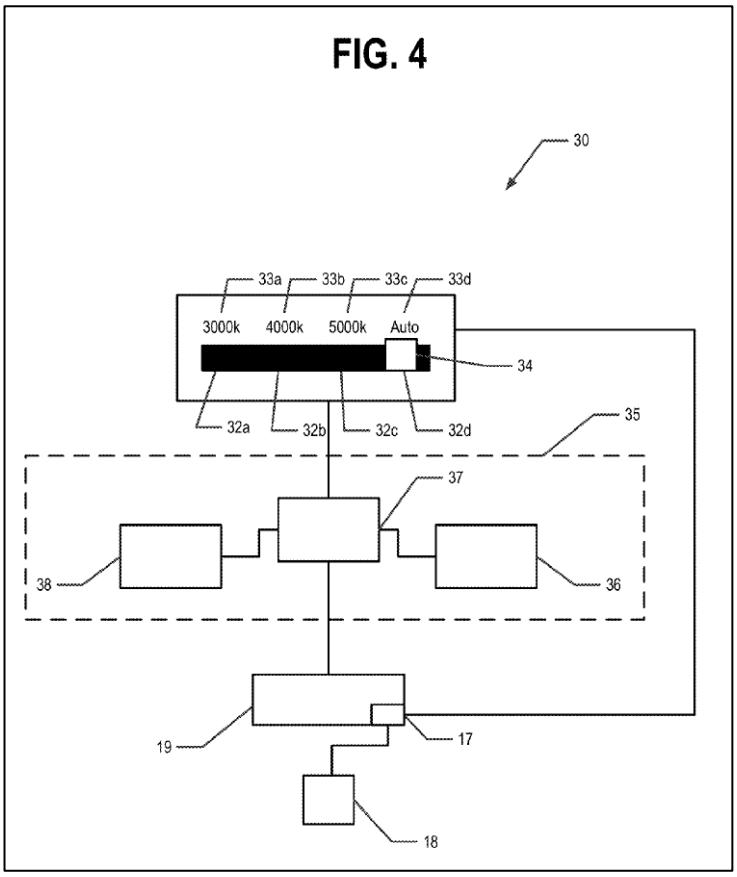

Id., Fig. 4.

313. Accordingly, Halliwell's "junction box mounted" CCT switch includes "at least one first coupling feature disposed on the body, wherein the at least one first coupling feature is configured to electrically couple to an electrical cable of the luminaire."

4. Element 13c: "an actuator disposed on the body, wherein the actuator has a range of positions"

314. Element 13c recites: "an actuator disposed on the body, wherein the actuator has a range of positions." Ex. 1001, 16:1-2.

315. The exemplary CCT switch 30 includes four positions corresponding to four "color temperature mode[s]," including 3000 K, 4000 K, and 5000 K as shown below. *Id*. 12:60-13:14, Fig. 4. The switch includes an actuator which is highlighted in blue in Fig. 4 below. As shown, the actuator is the component of the switch that can be moved by one's thumb or other finger to the desired position of the switch.

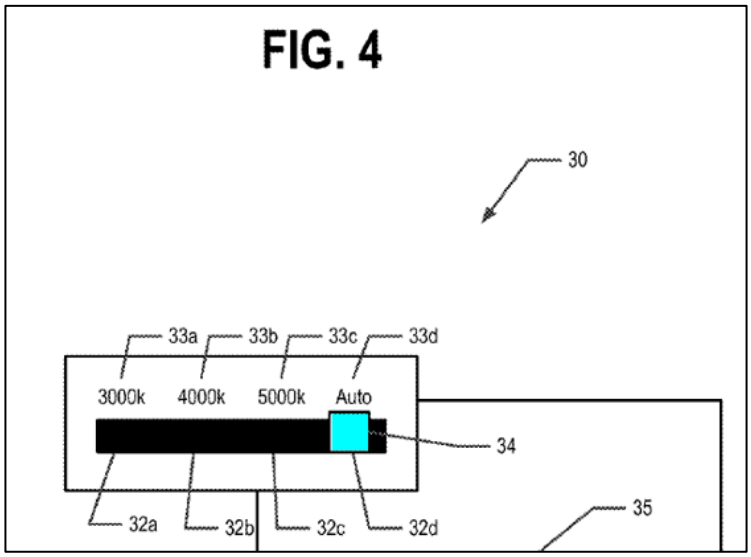

Ex. 1012, Fig. 4 (cropped and color added).

316. Accordingly, Halliwell discloses a CCT switch with "an actuator disposed on the body, wherein the actuator has a range of positions" as recited in element 13c of claim 13 of the '336 Patent.

317. It should also be mentioned that the '336 Patent also depicts an actuator (673) as a button that the user can slide "along the length" of a slot within the body of a switch (631) (Ex. 1001, 10:17-20) like the slide button disclosed in Halliwell:

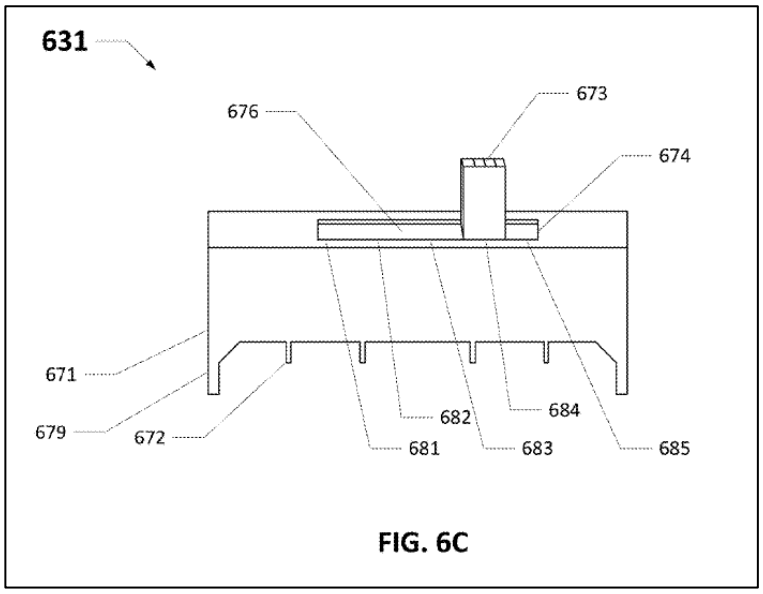

Id., Fig. 6C.

318. The diagram of the slide switch shown in Fig. 6C of the '336 Patent is virtually identical to every other slide switch that has been mass-produced for several decades.

319. I understand that, in litigation involving the '336 Patent, patentee Signify has interpreted the "actuator" of claim 13 as encompassing slide "buttons" such as those disclosed in Halliwell:

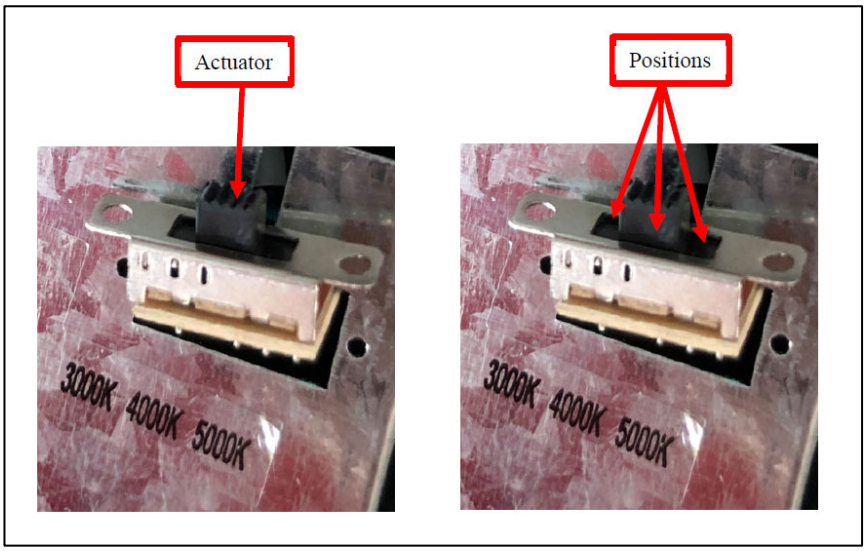

Ex. 1010, 27 (prepared by patentee Signify).

320. Electrical switches are a type of "actuator" that is manually or electrically switched. A slide switch is generally switched manually, as shown by the black plastic slide that has a corrugated surface, as pictured above. A wide range of types of actuators were well known in the art decades before the alleged invention of the '336 Patent. An example of electrically-activated switches in the high-current contact switches that "open" or "close" when the current flowing through a motor reaches a preset value.

5. Element 13d: "wherein each position of the range of positions of the actuator corresponds to a CCT of the light emitted by the luminaire."

321. Element 13d recites: "wherein each position of the range of positions of the actuator corresponds to a CCT of the light emitted by the luminaire." Ex. 1001, 16:3-5.

322. As discussed above and shown below in the cropped version of Fig. 4, the exemplary slide switch 30 shows four positions corresponding to four different "color temperature mode[s]": 3000 K, 4000 K, and 5000 K. *Id*. 12:60-13:14, Fig. 4. Each position of the switch corresponds to a specific value of the CCT for the light emitted by Halliwell's luminaire.

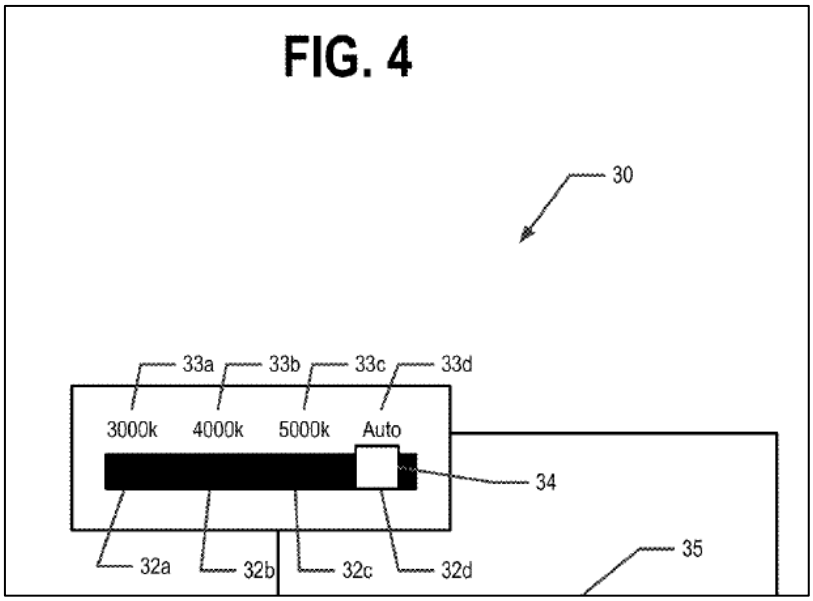

Ex. 1012, Fig. 4 (cropped).

323. Therefore, Halliwell discloses a CCT switch "wherein each position of the range of positions of the actuator corresponds to a CCT of the light emitted by the luminaire."

6. Conclusion For Claim 13

324. As I have explained in the section above, Halliwell discloses all elements of claim 13 of the '336 Patent. Accordingly, Halliwell anticipates and/or renders obvious claim 13.

M. Claim 15: "The switch of claim 13, wherein each position is discrete within the range of positions."

325. Claim 15 recites: "[t]he switch of claim 13, wherein each position is discrete within the range of positions." Ex. 1001, 16:8-9.

326. As discussed above in Section XI.D with respect to claim 3, Halliwell discloses a CCT switch having a range of positions, and "each position of the plurality of positions is discrete." Accordingly, for the same reasons discussed above with respect to claim 3, Halliwell discloses a CCT switch "wherein each position is discrete within the range of positions."

1. Conclusion For Claim 15

327. As explained in Section XI.L, Halliwell anticipates and/or renders obvious claim 13. This section has also shown that Halliwell discloses the additional elements of claim 15. Accordingly, Halliwell anticipates and/or renders obvious claim 15.

N. Claim 16: "The switch of claim 15, wherein the range of positions comprises a first position, a second position, a third position, a fourth position, and a fifth position."

328. Claim 16 recites: "The switch of claim 15, wherein the range of positions comprises a first position, a second position, a third position, a fourth position, and a fifth position." Ex. 1001, 16:11-13.

329. As discussed above in Section XI.E with respect to claim 4 of the '336 Patent, Halliwell discloses a CCT switch "wherein the range of positions comprises

a first position, a second position, a third position, a fourth position, and a fifth position." Accordingly, Halliwell discloses a CCT switch "wherein the range of positions comprises a first position, a second position, a third position, a fourth position, and a fifth position."

1. Conclusion For Claim 16

330. As explained in Section XI.M, Halliwell anticipates and/or renders obvious claim 15. This section has also shown that Halliwell discloses the additional elements of claim 16. Accordingly, Halliwell anticipates and/or renders obvious claim 16.

O. Claim 19: "The switch of claim 13, wherein the body is configured to be disposed within a junction box."

331. Claim 19 recites: "The switch of claim 13, wherein the body is configured to be disposed within a junction box." Ex. 1001, 16:23-24.

332. As discussed above in Section XI.G with respect to claim 7, Halliwell discloses a CCT switch "wherein the switch is disposed within" a junction box. Accordingly, for the same reasons discussed above with respect to claim 7, Halliwell discloses a CCT switch "wherein the body is configured to be disposed within a junction box."

1. Conclusion For Claim 19

333. As explained in Section XI.L, Halliwell anticipates and/or renders obvious claim 13. This section has also shown that Halliwell discloses the additional

elements of claim 19. Accordingly, Halliwell anticipates and/or renders obvious claim 19.

P. Claim 20: "The switch of claim 13, wherein the switch is a rotary switch."

334. Claim 20 recites: "[t]he switch of claim 13, wherein the switch is a rotary switch."

335. As discussed above in Section XI.I with respect to claim 10, Halliwell discloses a luminaire with a CCT switch, "wherein the switch is a rotary switch." For the same reasons discussed above with respect to claim 10, Halliwell discloses "[t]he switch of claim 13, wherein the switch is a rotary switch."

1. Conclusion For Claim 20

336. As discussed in Section XI.L, Halliwell anticipates and/or renders obvious claim 13 of the '336 Patent. In addition, the preceding text demonstrates that Halliwell disclose the additional elements of claim 20. Accordingly, Halliwell anticipates and/or renders obvious claim 20.

XII. Ground 3: Claims 13 and 15 Are Anticipated By Reiff

A. Claim 13

1. Preamble: "A switch for controlling a correlated color temperature (CCT) of light emitted by a luminaire, the switch comprising:"

337. The preamble of claim 13 recites: "[a] switch for controlling a correlated color temperature (CCT) of light emitted by a luminaire, the switch comprising." Ex. 1001, 15:22-24.

338. Reiff discloses a number of lighting devices that "include[] fluorescent and/or LED light sources," "wherein the color of the emitted light can easily be switched." Ex. 1013, Abstract. The exemplary light device shown in Fig. 2 below "is a perspective view of an [] embodiment of a light in accordance with [Reiff's] invention," that includes both LED light sources and a fluorescent light source. Ex. 1013, 2:45-46. The light includes a "control box 64 which includes a switch … for … selecting between the different light sources … [E]ither a regular white light fluorescent light source can be selected, or a 'colored' LED light source can be selected." Ex. 1013, 4:28-36. The "switch 66 which is a stepped dimmer switch linearly slidable in slot 68 to select light source 28." *Id.* "Each of the light sources emits a different color of light," thus, each light source within the luminaire (fluorescent lamp or LED) emits light having a different value of CCT. *Id.*, 2:19-22. Indeed, since the phosphor that coats the inside of the glass tube in a fluorescent

lamp determines the CCT of the emitted light and many different phosphors are available for fluorescent lamps, the number of CCT values available with both one or more fluorescent lamps and the LEDs is considerable. The control box, including the switch, has been highlighted in yellow in Fig. 2 below.

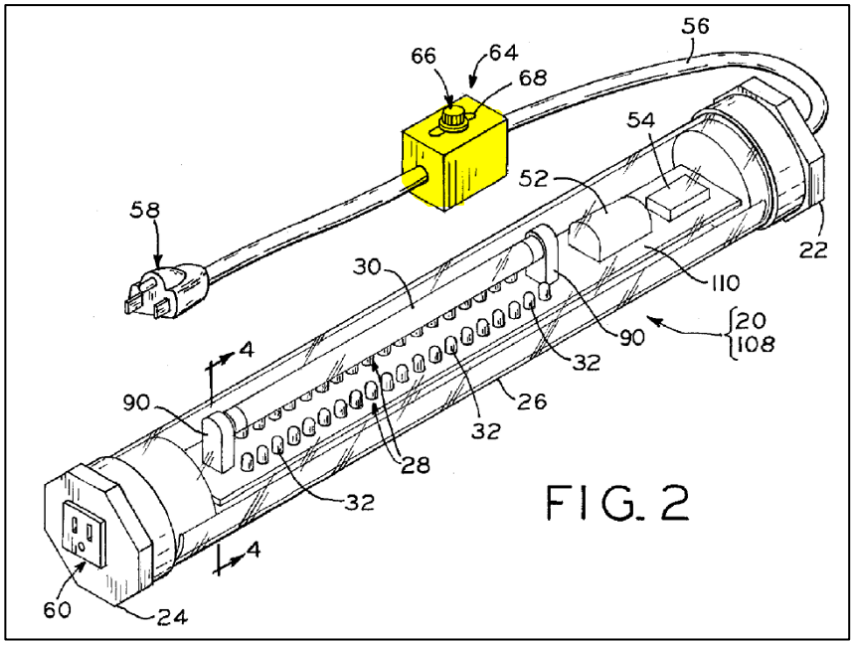

Ex. 1013, Fig. 2 (color added).

339. Thus, to the extent the preamble is limiting, Reiff discloses it.

2. Element 13a: "a body;"

340. Element 13a recites: "a body." Ex. 1001, 15:25.

341. As discussed above, the "control box 64 [includes a] switch 66 which is … linearly slidable in slot 68." Ex. 1013, 4:28-36. As shown in Fig. 2 below, the control box 64 necessarily includes a body portion for the switch. The portion of the control box 64 that forms a body for the switch has been highlighted in yellow in reproduction of Fig. 2 below.

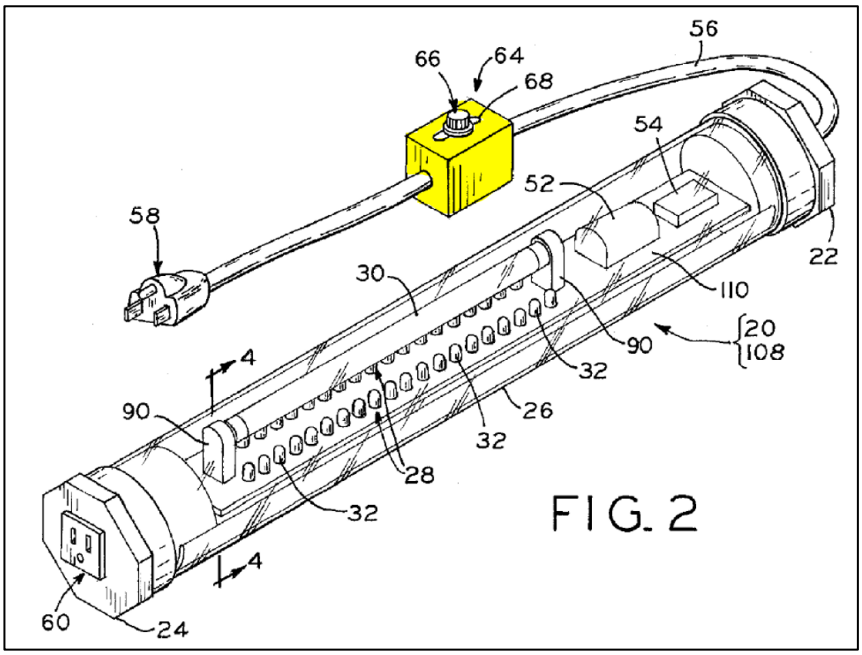

Ex. 1013, Fig. 2 (color added).

342. Thus, Reiff's switch includes a body as recited in element 13a of claim 13.

3. Element 13b: "at least one first coupling feature disposed on the body, wherein the at least one first coupling feature is configured to electrically couple to an electrical cable of the luminaire; and"

343. Element 13b recites: "at least one first coupling feature disposed on the body, wherein the at least one first coupling feature is configured to electrically couple to an electrical cable of the luminaire; and." Ex. 1001, 15:26-15:29.

344. As shown in Fig. 2 (reproduced below), Reiff's light "is powered by conventional 120-volt power, electrical cord 56 [that] extends from one end 22 of the light" and has a "plug 58 at a distal end of the cord for insertion into a conventional electrical outlet." Ex. 1013, 4:16-19. As illustrated in Fig. 2, Reiff's

control box 64 is "[l]ocated along electrical cord 56 [which] extend[s] from end cap 22" and is connected to the light device. Ex. 1013, 6:18-20. The control box 64 (with switch 66) is highlighted in yellow, and the electrical cord 56 highlighted in blue, in Fig. 2 below. Because the control box 64 is located on the electrical cable 56, it is necessarily electrically connected ("coupled") to electrical cable 56 and, therefore, must include at least "one coupling feature". In other words, both the input and output terminals of the control box (and switch) *must* be electrically connected to the cable 56 by soldering, screw terminals, spade lugs, pins, or a myriad of other connectors or connections that have been developed over the past century. If the control box (and switch) and cable are not electrically connected, current will not flow and the luminaire will not function. Having all portions of a circuit electrically connected is referred to by electricians and electrical circuit designers as "electrical continuity"—a condition that a POSA would have assumed to be met when the luminaire is actually constructed and tested.

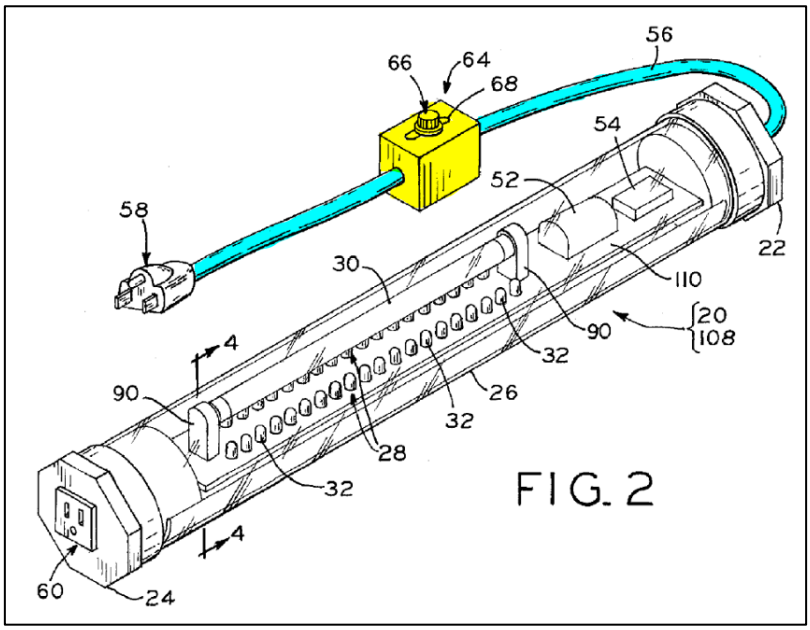

Ex. 1013, Fig. 2 (colors added).

345. Thus, Reiff's control box switch includes "at least one first coupling feature disposed on the body, wherein the at least one first coupling feature is configured to electrically couple to an electrical cable of the luminaire" as recited in element 13b of claim 13.

4. Element 13c: "an actuator disposed on the body, wherein the actuator has a range of positions,"

346. Element 13c recites: "an actuator disposed on the body, wherein the actuator has a range of positions." Ex. 1001, 16:1-2.

347. Reiff's control box switch includes an actuator (as recited in the '336 Patent), identified as switch 66. The actuator is highlighted in green in Fig. 2 below. The actuator (*i.e.*, switch 66) is located on the body of the control box 64 (highlighted in yellow) as shown in Fig. 2 below. Ex. 1013, Fig. 2. "Switch 66 has three

positions, one position being the off position as shown in Fig. 2, one position operating the fluorescent lamp and one position operating the LEDS. Switch 66 slides into one of the three positions…" *Id.*, 6:20-24.

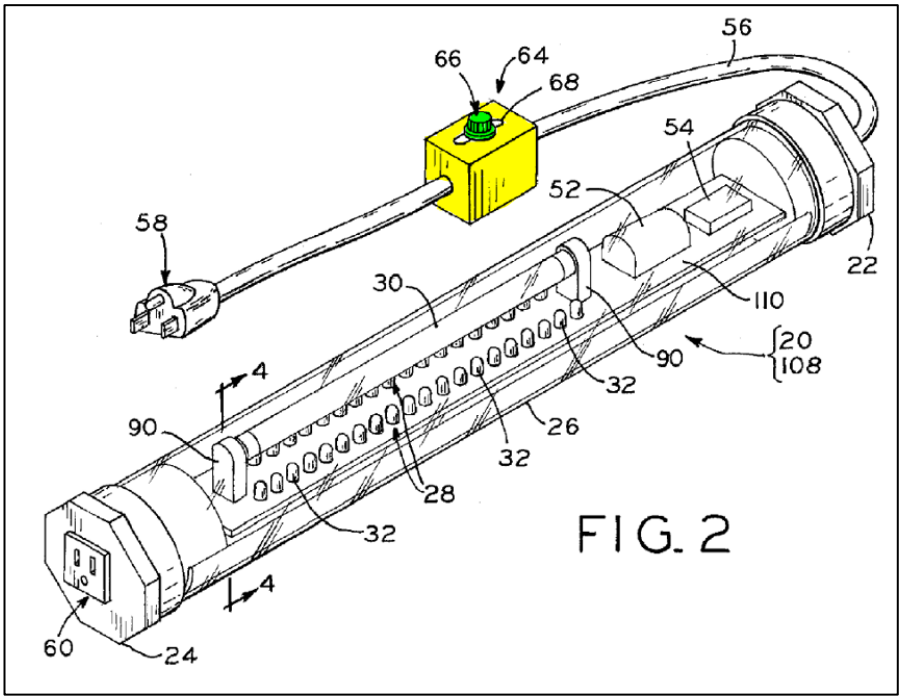

Id., Fig. 2 (colors added).

348. Thus, Reiff's control box switch includes "an actuator disposed on the body, wherein the actuator has a range of positions" as recited in element 13c of claim 13 of the '336 Patent.

5. Element 13d: "wherein each position of the range of positions of the actuator corresponds to a CCT of the light emitted by the luminaire."

349. Element 13d recites: "wherein each position of the range of positions of the actuator corresponds to a CCT of the light emitted by the luminaire." Ex. 1001, 16:3-5.

350. As discussed above, Reiff's control box switch includes "three positions, one position being the off position as shown in Fig. 2, one position operating the fluorescent lamp and one position operating the LEDs. Switch 66 slides into one of the three positions…" Ex. 1013, 6:20-24. Moreover, "[e]ach of the light sources emits a different color of light," so, each light source emits light having a different CCT value. *Id.*, 2:19-22. Accordingly, the two "on" positions correspond to emitted light having a different CCT value: the off position corresponds to no light emitted by the luminaire because both light sources are off, the LED operating position(s) corresponds to the CCT value or values emitted by the LEDs, and the fluorescent lamp operating position corresponds to yet another CCT value characteristic of the light emitted by the fluorescent lamp. A POSA would have understood that the two "on" positions are a "range of positions" as recited in element 13d.

351. Thus, Reiff's control box switch is a switch "wherein each position of the range of positions of the actuator corresponds to a CCT of the light emitted by the luminaire."

6. Conclusion For Claim 13

352. As explained in the section above, Reiff discloses all elements of claim 13 of the '336 Patent. Accordingly, Reiff anticipates and/or renders obvious claim 13.

B. Claim 15

353. Claim 15 recites: "[t]he switch of claim 13, wherein each position is discrete within the range of positions." Ex. 1001, 16:8-9.

354. As discussed above, Reiff's control box switch includes "three positions…" Ex. 1013, 6:20-24. These three positions are a "range of positions" and the switch actuator can only be set to one position at a time. Therefore, the CCT value associated with each position of the switch is discrete.

1. Conclusion For Claim 15

355. As explained in Section XII.A, Reiff anticipates and/or renders obvious claim 13. This section has also shown that Reiff discloses the additional elements of claim 15. Accordingly, Reiff anticipates and/or renders obvious claim 15.

XIII. Declaration

356. I declare that all statements made herein on my own knowledge are true and that all statements made on information and belief are believed to be true, and further, that these statements were made with the knowledge that willful false statements and the like so made are punishable by fine or imprisonment, or both, under Section 1001 of Title 18 of the United States Code.

Dated: October 25, 2023 By: _____

Dr. J. Gary Eden