US009820350B2

(12) **United States Patent**
Pyshos et al.

(10) **Patent No.: US 9,820,350 B2**
(45) **Date of Patent: Nov. 14, 2017**

(54) **CONFIGURABLE LIGHTING SYSTEM**

(71) Applicant: **Cooper Technologies Company**, Houston, TX (US)

(72) Inventors: **Steven Walter Pyshos**, Peachtree City, GA (US); **Raymond Janik**, Fayetteville, GA (US); **Kevin Roy Harpenau**, Atlanta, GA (US)

(73) Assignee: **Cooper Technologies Company**, Houston, TX (US)

(*) Notice: Subject to any disclaimer, the term of this patent is extended or adjusted under 35 U.S.C. 154(b) by 0 days.

(21) Appl. No.: **15/435,141**

(22) Filed: **Feb. 16, 2017**

(65) **Prior Publication Data**

US 2017/0303363 A1 Oct. 19, 2017

Related U.S. Application Data

(60) Provisional application No. 62/297,424, filed on Feb. 19, 2016.

(51) **Int. Cl.**

H05B 33/08	(2006.01)
F21V 5/04	(2006.01)
F21V 17/12	(2006.01)
F21K 9/62	(2016.01)
F21V 7/00	(2006.01)
F21V 23/00	(2015.01)
F21V 3/02	(2006.01)

(Continued)

(52) **U.S. Cl.**

CPC ***H05B 33/0863*** (2013.01); ***F21K 9/62*** (2016.08); ***F21S 8/026*** (2013.01); ***F21V 3/02*** (2013.01); ***F21V 5/04*** (2013.01); ***F21V 7/00*** (2013.01); ***F21V 17/12*** (2013.01); ***F21V 21/088*** (2013.01); ***F21V 23/001*** (2013.01); ***H05B 33/0845*** (2013.01); *F21Y 2113/13* (2016.08); *F21Y 2115/10* (2016.08)

(58) **Field of Classification Search**

CPC H05B 37/02; H05B 33/08; H05B 33/0845; H05B 33/0863; F21K 9/62; F21S 8/026; F21V 3/02; F21V 5/04; F21V 7/00; F21V 17/12; F21V 21/088; F21V 23/001; F21Y 2113/13; F21Y 2115/10

USPC ..... 315/151, 185 R, 209 R, 291, 294, 307, 315/308, 312

See application file for complete search history.

(56) **References Cited**

U.S. PATENT DOCUMENTS

7,416,312	B1	8/2008	McDermott	
8,172,415	B2 *	5/2012	Wegh	F21S 10/02 362/231

(Continued)

Primary Examiner — Jimmy Vu

(74) *Attorney, Agent, or Firm* — King & Spalding LLP

(57) **ABSTRACT**

A system can configure a luminaire for providing illumination of a selected color temperature, a selected lumen output, or a selected photometric distribution. The luminaire can comprise at least two light sources that have different illumination characteristics, for example different color temperatures, different lumen outputs, or different photometric distributions. The system can configure the luminaire to operate a first of the two light sources, a second of the two light sources, or both of the light sources based on an input. When the luminaire is configured to operate both of the light sources, the luminaire can produce illumination having a color temperature, a lumen output, or a photometric distribution that is different than either of the two light sources.

20 Claims, 10 Drawing Sheets

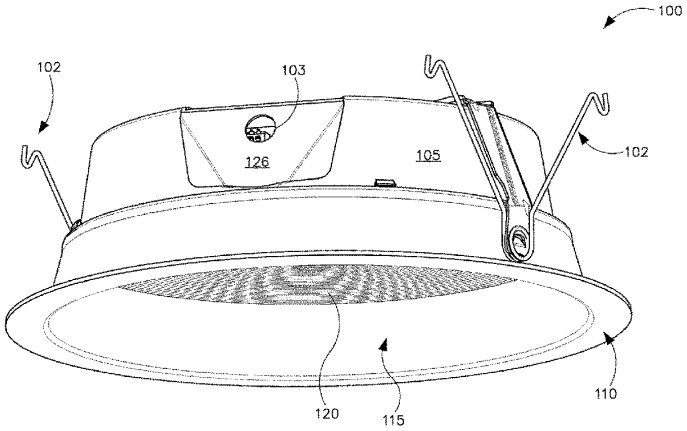

(51) **Int. Cl.**

F21V 21/088	(2006.01)
F21S 8/02	(2006.01)
F21Y 115/10	(2016.01)
F21Y 113/13	(2016.01)

(56) **References Cited**

U.S. PATENT DOCUMENTS

8,317,362	B2	11/2012	Ku et al.	
2006/0220586	A1	10/2006	Latham	
2014/0210357	A1	7/2014	Yan et al.	
2015/0054410	A1*	2/2015	Sanders	H05B 33/0857 315/151
2017/0019973	A1	1/2017	Beck et al.	
2017/0086265	A1	3/2017	Akiyama et al.	

* cited by examiner

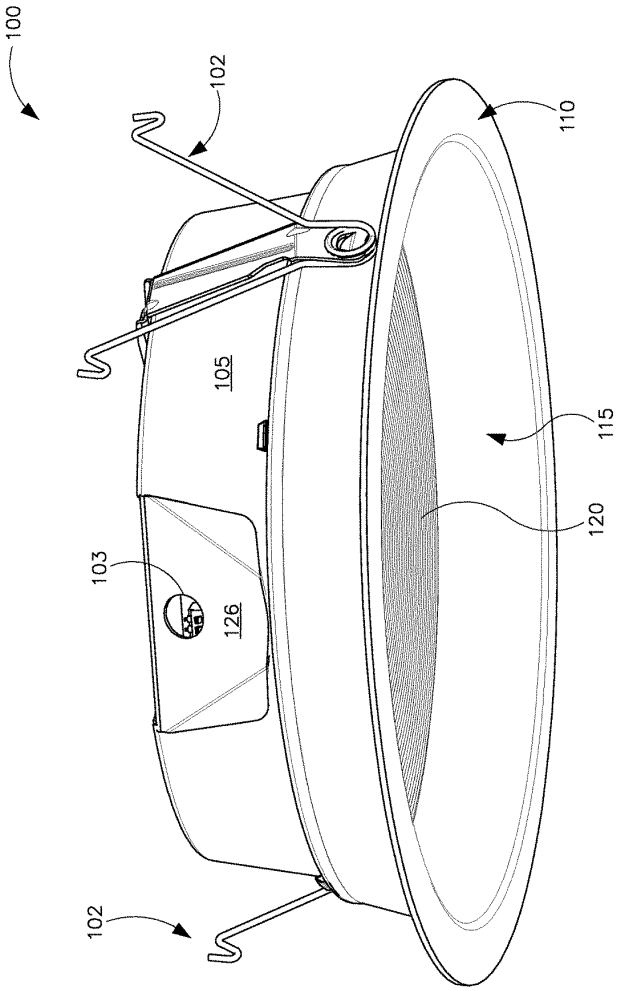

FIG. 1A

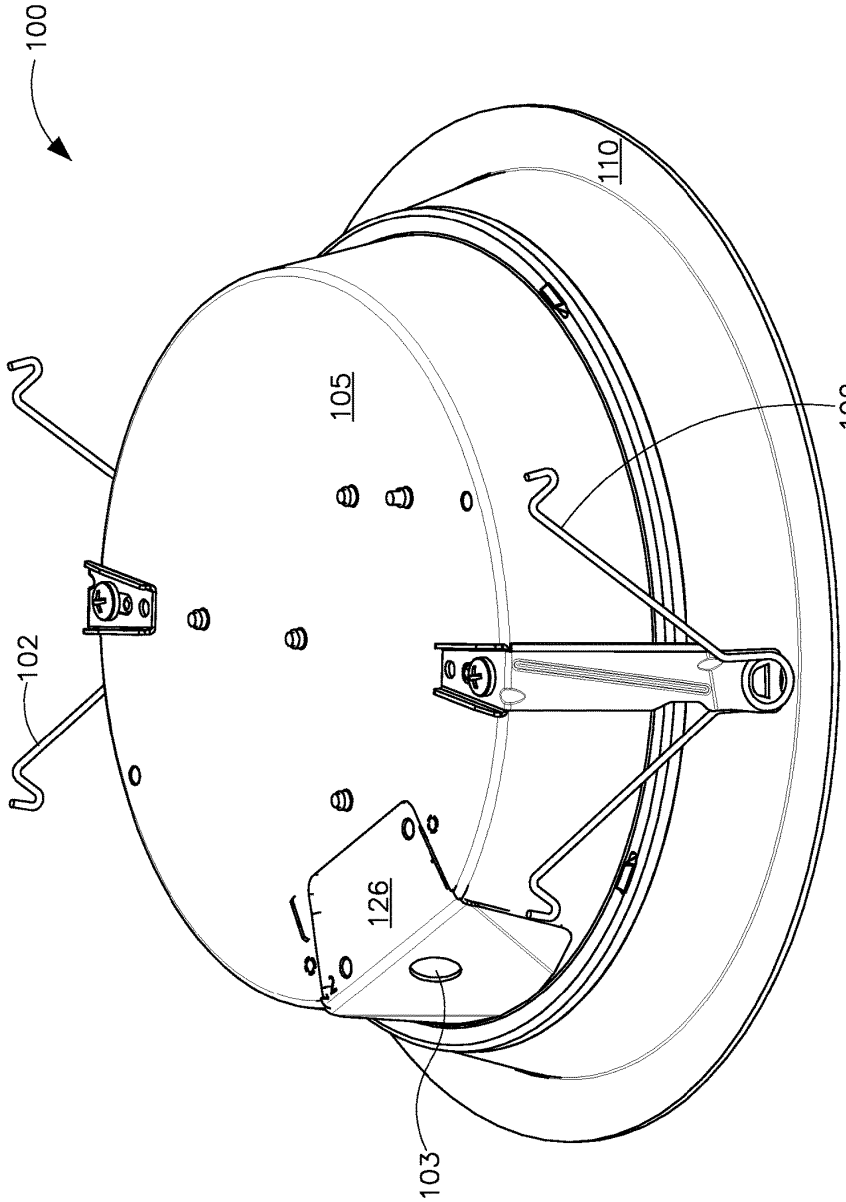

FIG. 1B

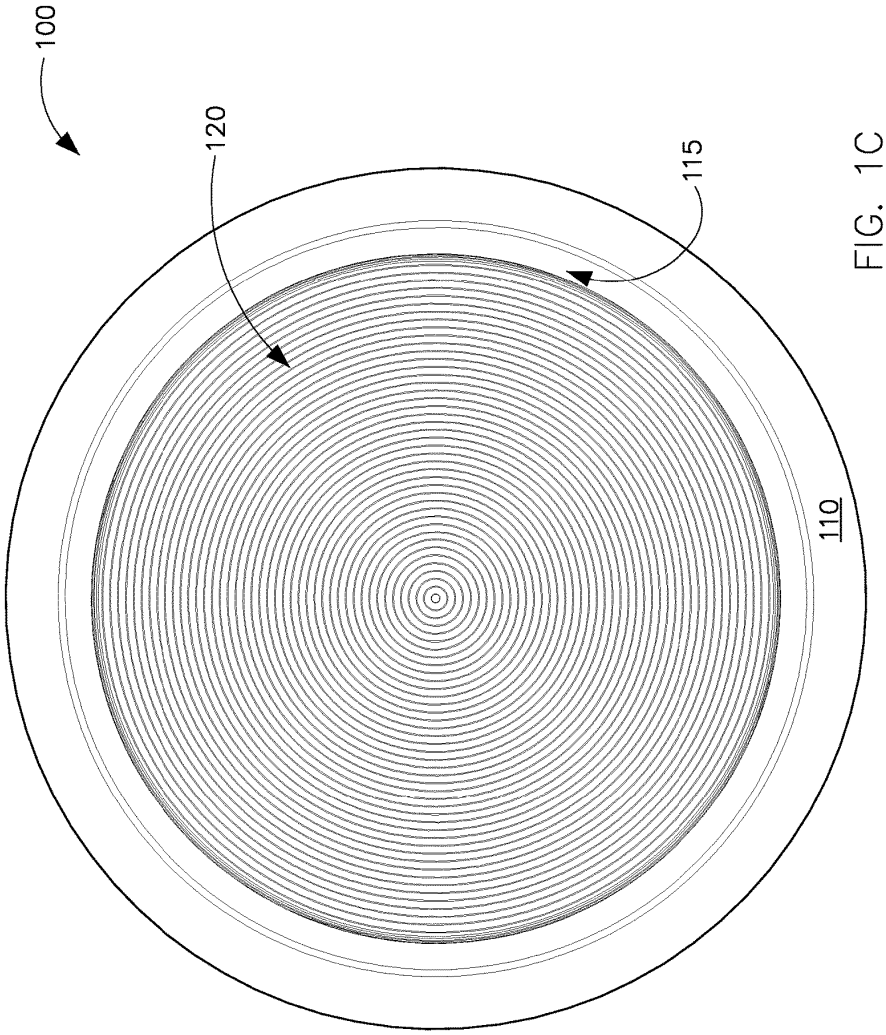

FIG. 1C

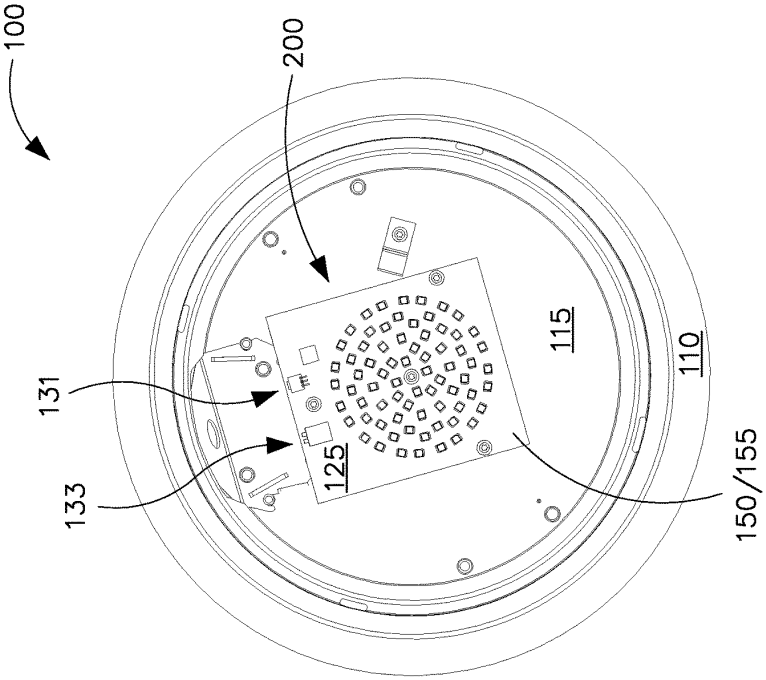

FIG. 1E

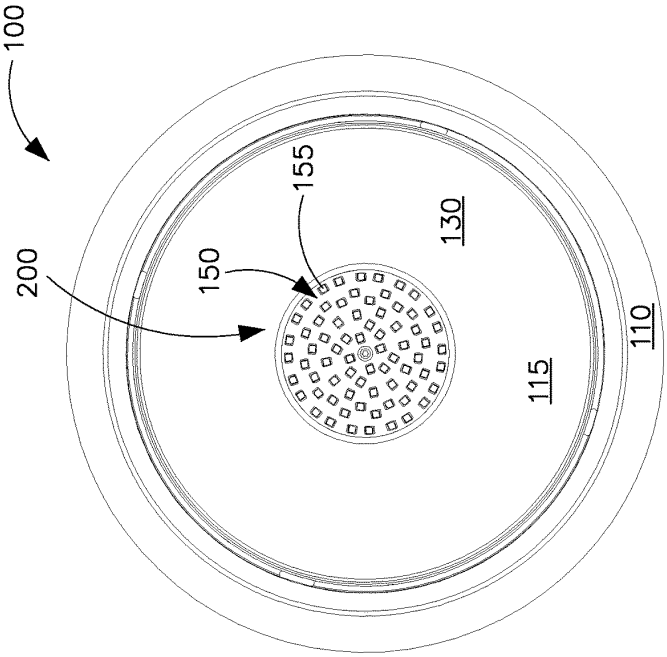

FIG. 1D

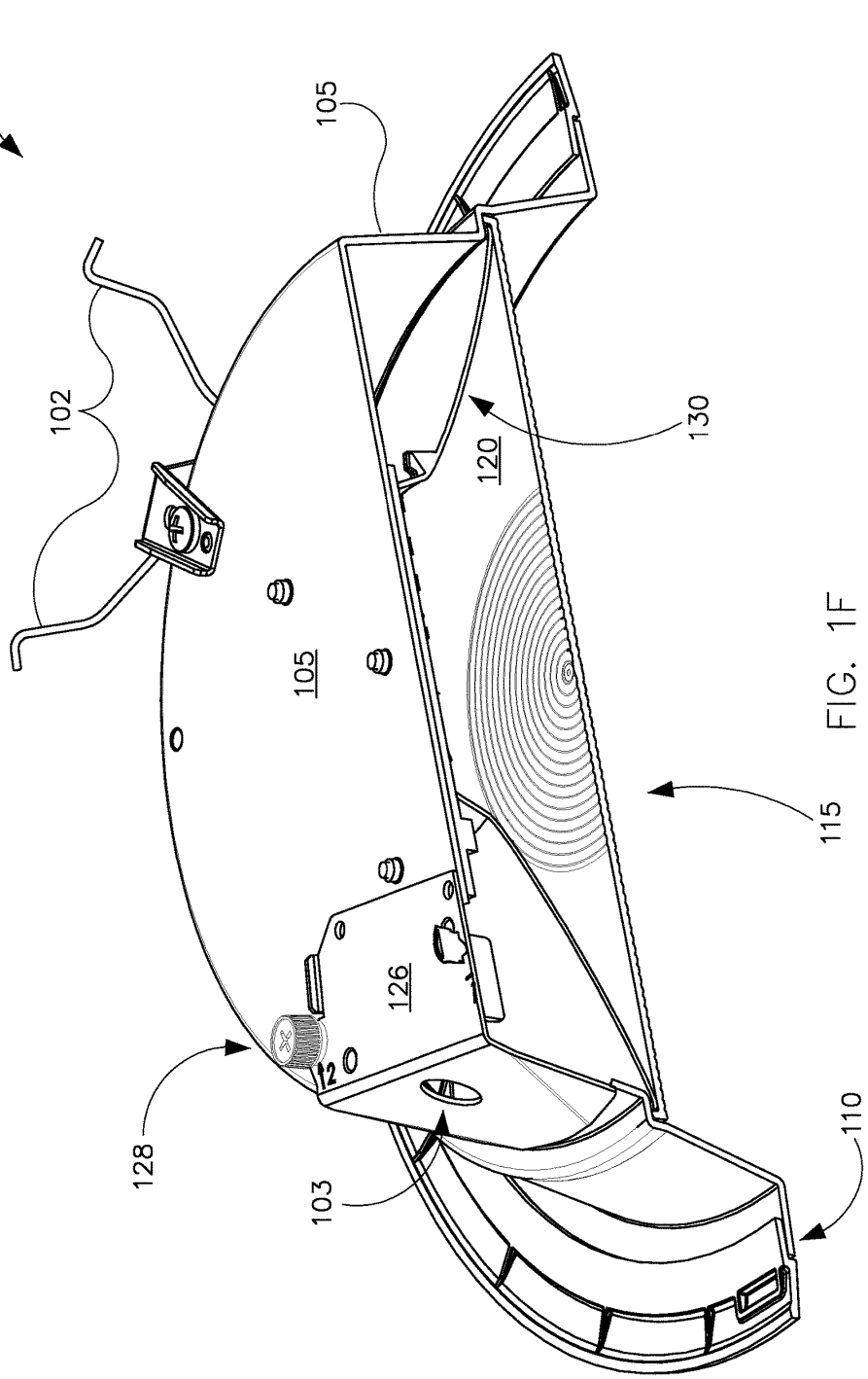

FIG. 1F

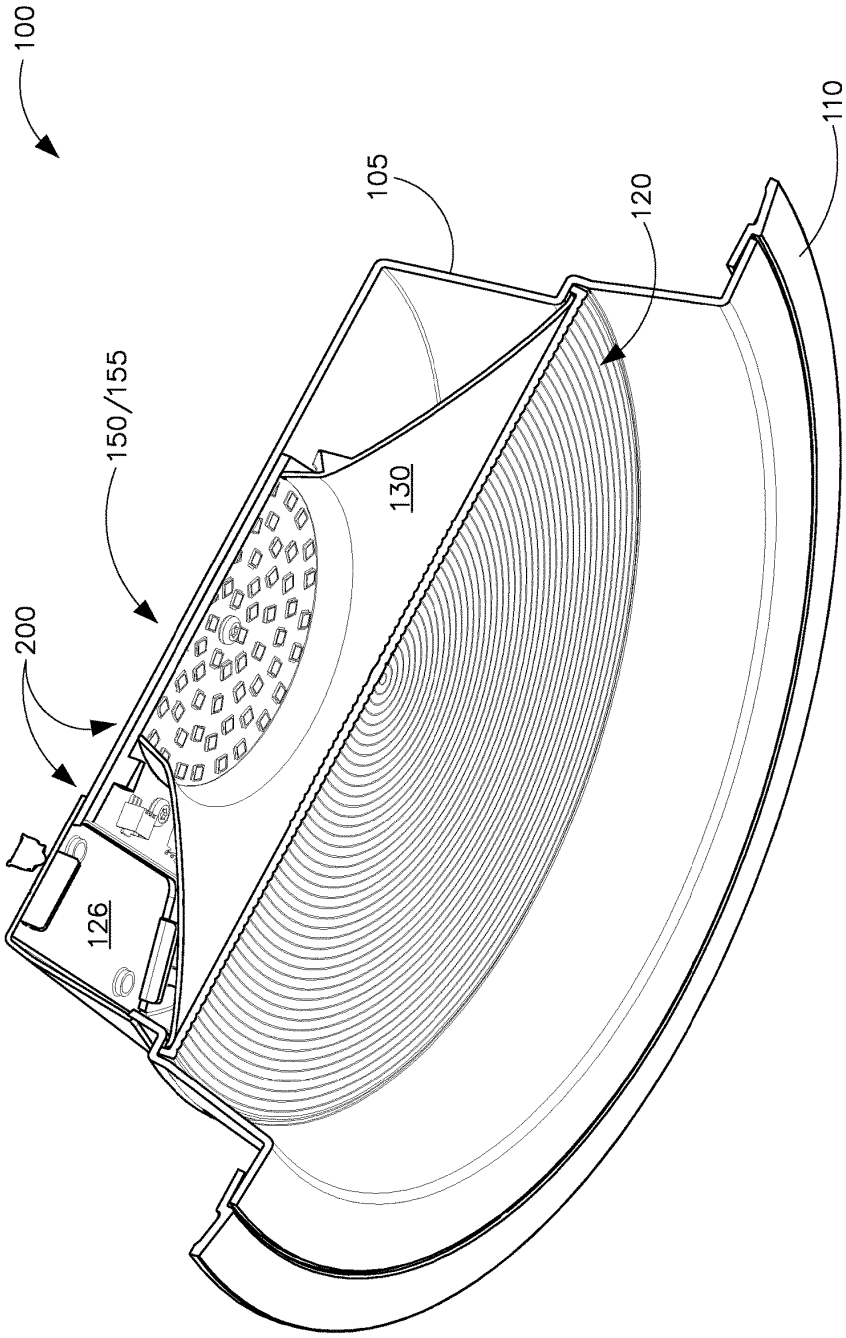

FIG. 1G

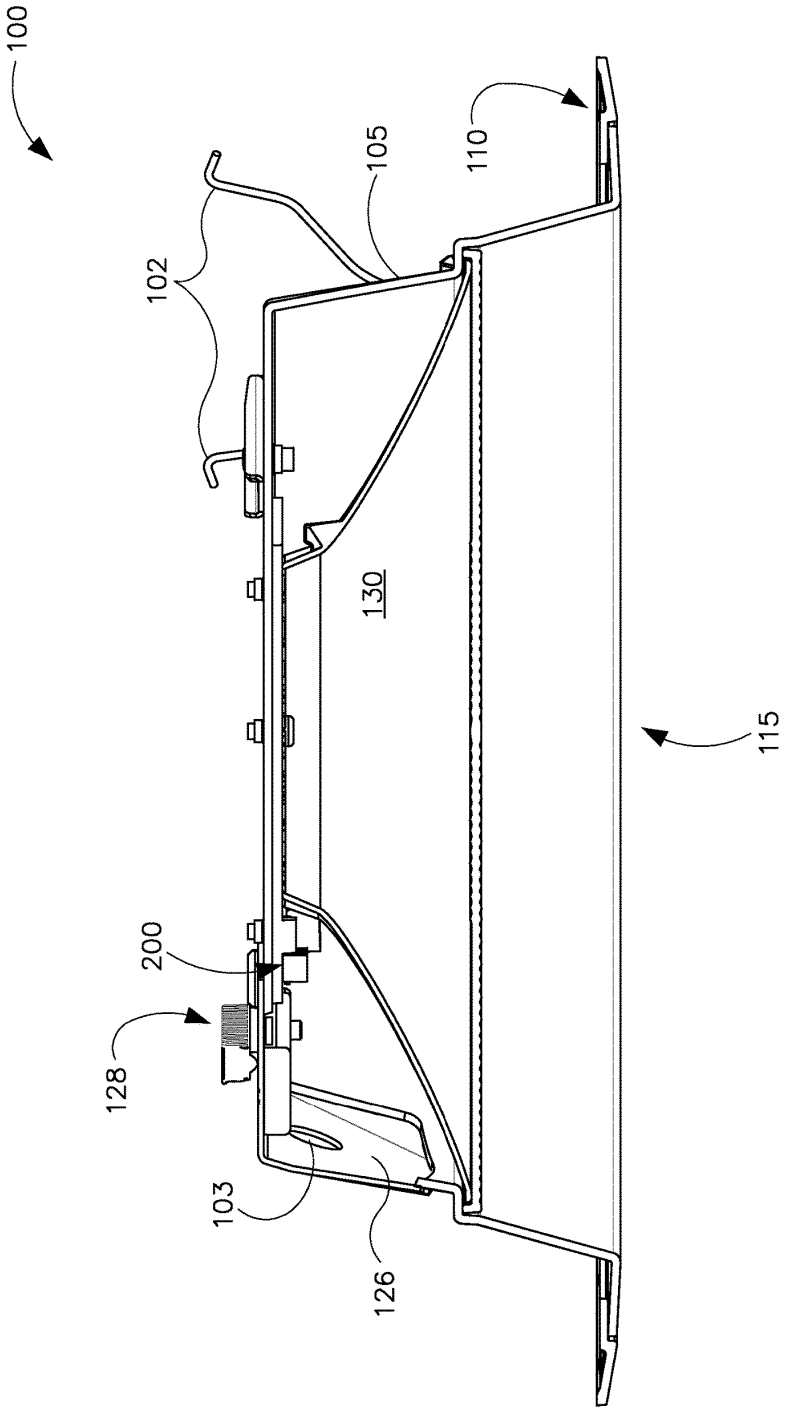

FIG. 1H

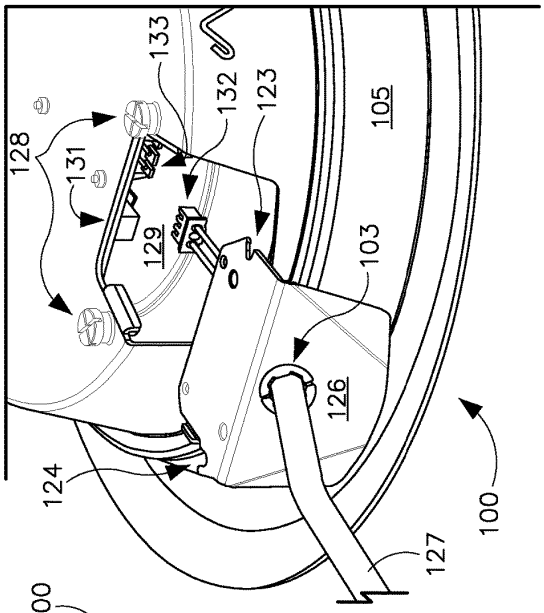

FIG. 1J

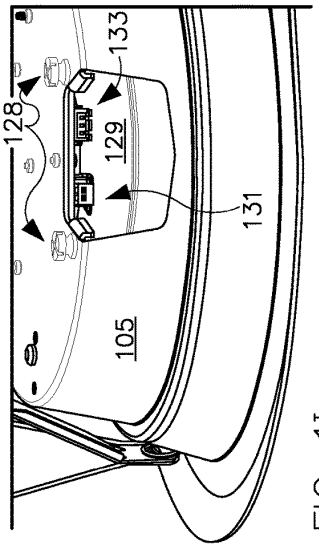

FIG. 1I

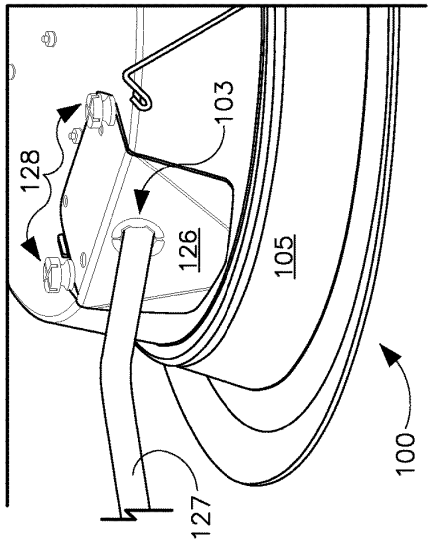

FIG. 1K

FIG. 2

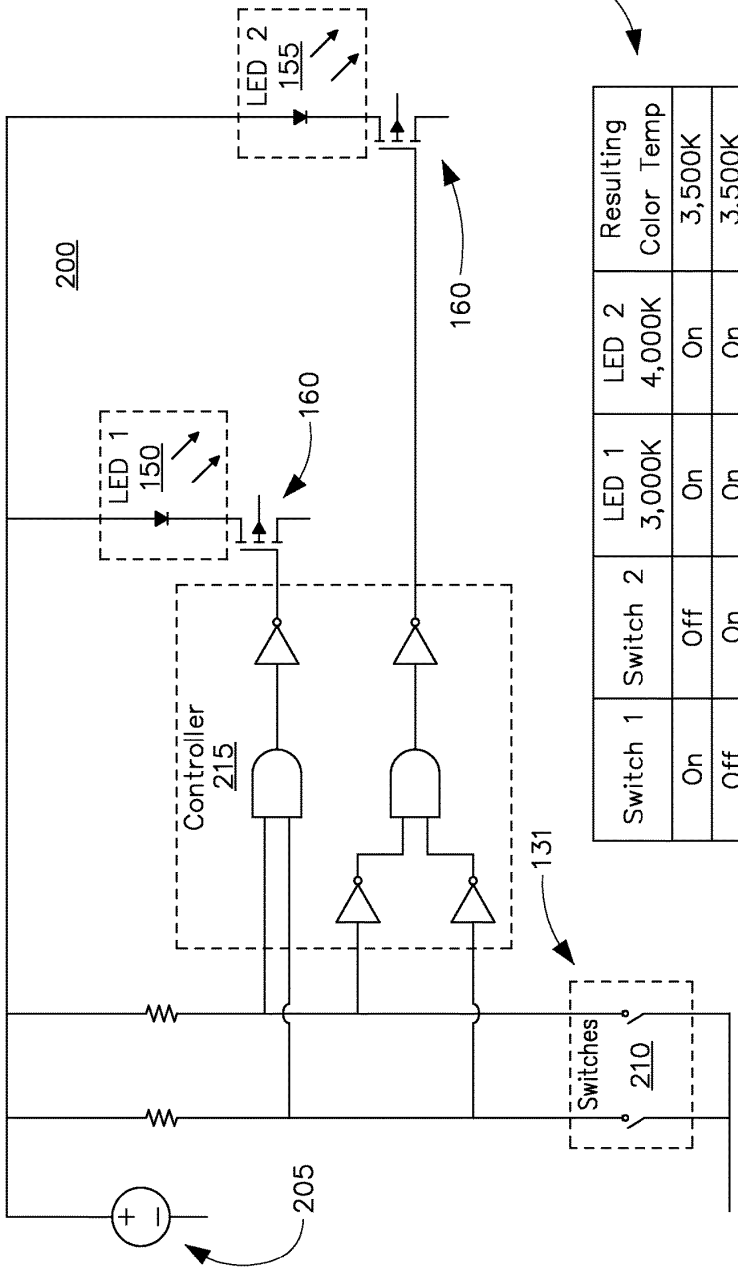

FIG. 3

300

Switch 1	Switch 2	LED 1 3,000K	LED 2 4,000K	Resulting Color Temp
On	Off	On	On	3,500K
Off	On	On	On	3,500K
On	On	On	Off	3,000K
Off	Off	Off	On	4,000K

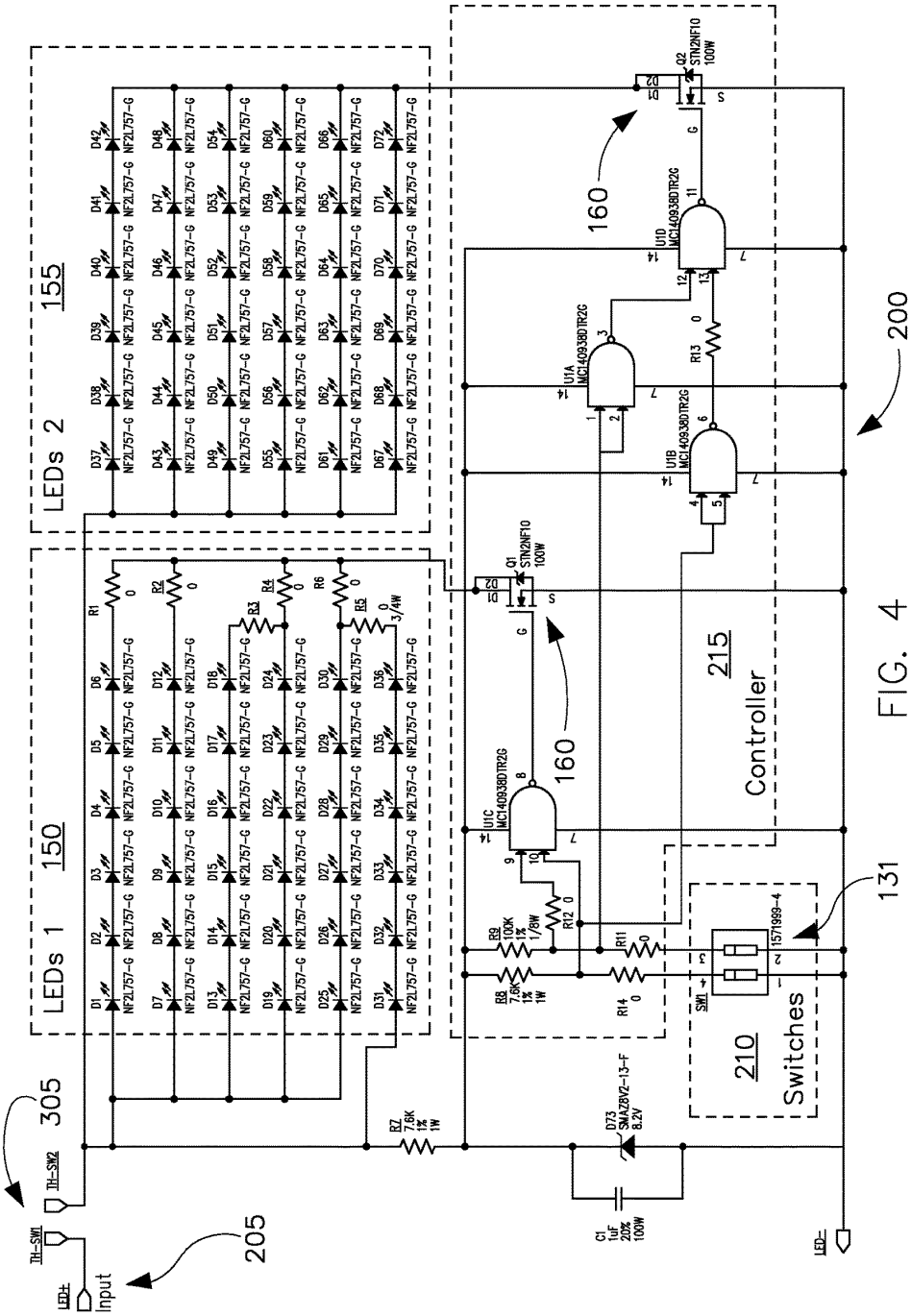
LEDs 1
150
LEDs 2
155
Controller
215
Switches
210
160
160
200
131
305
205
Input
TH-SW1
TH-SW2
LED+
LED-
NF2L757-G
MC14093BDTR2G
STN2NF10
100W
1571999-4
SMAZ8V2-13-F
8.2V
C1
1uF
20%
100W
R7
7.6K
1%
1W
R8
7.6K
1%
1W
R9
100K
1%
1/8W
R11
0
R12
0
R13
0
R14
0
R1
0
R2
0
R3
0
R4
0
R5
0
3/4W
R6
0
D1
D2
D3
D4
D5
D6
D7
D8
D9
D10
D11
D12
D13
D14
D15
D16
D17
D18
D19
D20
D21
D22
D23
D24
D25
D26
D27
D28
D29
D30
D31
D32
D33
D34
D35
D36
D37
D38
D39
D40
D41
D42
D43
D44
D45
D46
D47
D48
D49
D50
D51
D52
D53
D54
D55
D56
D57
D58
D59
D60
D61
D62
D63
D64
D65
D66
D67
D68
D69
D70
D71
D72
D73
U1A
U1B
U1C
U1D
Q1
Q2
SW1

FIG. 4

CONFIGURABLE LIGHTING SYSTEM

CROSS REFERENCE TO RELATED APPLICATIONS

This application claims priority to U.S. Provisional Patent Application No. 62/297,424 filed Feb. 19, 2016 in the name of Steven Walter Pyshos and Raymond Janik and entitled "Configurable Lighting System," the entire contents of which are hereby incorporated herein by reference.

TECHNICAL FIELD

Embodiments of the technology relate generally to lighting systems and more specifically to lighting systems that can be readily configured to produce illumination of different color temperatures.

BACKGROUND

For illumination applications, light emitting diodes (LEDs) offer substantial potential benefit associated with their energy efficiency, light quality, and compact size. However, to realize the full potential benefits offered by light emitting diodes, new technologies are needed.

With luminaires that incorporate incandescent or fluorescent technology, some flexibility can be obtained by swapping lamps to meet user preferences. In such luminaires, lamp selection can provide flexibility in terms of correlated color temperature (CCT or color temperature) and light output (lumen output). For example, a compact fluorescent downlight might accept 6-, 32-, and 42-watt lamps in 2700, 3000, and 3500 K CCT. Additionally, changing lamp position and focal point in a reflector of an incandescent or fluorescent fixture can change the fixture spacing criteria (SC) of a luminaire.

In contrast, conventional light-emitting-diode-based luminaires typically offer reduced flexibility when the luminaire's light-emitting-diode-based light source is permanently attached to the luminaire. Stocking conventional light-emitting-diode-based luminaires at distribution to accommodate multiple configurations that users may desire can entail maintaining a relatively large or cumbersome inventory.

Need is apparent for a technology to provide a light emitting diode system that can adapt to various applications, for example by delivering multiple color temperatures, multiple lumens, and/or multiple photometric distributions. Need further exists for a capability to enable a single luminaire to be stocked at distribution and then quickly configured according to application parameters and deployment dictates. Need further exists for luminaires that are both energy efficient and flexible. A capability addressing one or more such needs, or some other related deficiency in the art, would support improved illumination systems and more widespread utilization of light emitting diodes in lighting applications.

SUMMARY

In some aspects of the disclosure, a system can configure a luminaire for providing illumination of a selected color temperature, a selected lumen output, or a selected photometric distribution based on an input. The input may be field selectable or may be selectable at a distribution center or at a late stage of luminaire manufacture, for example.

In some aspects of the disclosure, the luminaire can comprise at least two light sources having different color temperatures. In a first configuration, the luminaire can produce illumination of a first color temperature using a first one of the light sources. In a second configuration, the luminaire can produce illumination of a second color temperature using a second one of the light sources. In a third configuration, the luminaire can produce illumination of a third color temperature using both of the first and second the light sources. The third color temperature may be between the first and second color temperatures. The value of the third color temperature within a range between the first and second color temperatures can be controlled by manipulating the relative amounts of light output by the first and second light sources. That is, adjusting the lumen outputs of the first and second light sources can define the color temperature of the illumination produced by the luminaire in the third configuration.

In some aspects of the disclosure, the luminaire can comprise at least two light sources having different lumen outputs. In a first configuration, the luminaire can produce illumination of a first lumen output using a first one of the light sources. In a second configuration, the luminaire can produce illumination of a second lumen output using a second one of the light sources. In a third configuration, the luminaire can produce illumination of a third lumen output using both of the first and second light sources.

In some aspects of the disclosure, the luminaire can comprise at least two light sources having different photometric distributions. In a first configuration, the luminaire can produce illumination of a first photometric distribution using a first one of the light sources. In a second configuration, the luminaire can produce illumination of a second photometric distribution using a second one of the light sources. In a third configuration, the luminaire can produce illumination of a third photometric distribution using both of the first and second light sources.

In some aspects of the disclosure, a circuit and an associated input to the circuit can configure a luminaire for providing illumination having a selected property, for example a selected color temperature, a selected lumen output, or a selected photometric distribution. The input can be settable to a first number of states. The circuit can map the first number of states into a second number of states that is less than the first number of states. For example, the input can have four states and the circuit can map these four states into three states. The three states can correspond to three different values of the illumination property, for example three different color temperatures, three different lumen outputs, or three different photometric distributions.

The foregoing discussion of controlling illumination is for illustrative purposes only. Various aspects of the present disclosure may be more clearly understood and appreciated from a review of the following text and by reference to the associated drawings and the claims that follow. Other aspects, systems, methods, features, advantages, and objects of the present disclosure will become apparent to one with skill in the art upon examination of the following drawings and text. It is intended that all such aspects, systems, methods, features, advantages, and objects are to be included within this description and covered by this application and by the appended claims of the application.

BRIEF DESCRIPTION OF THE DRAWINGS

FIGS. **1**A, **1**B, **1**C, **1**D, **1**E, **1**F, **1**G, **1**H, **1**I, **1**J, and **1**K (collectively FIG. **1**) illustrate views of a luminaire in accordance with some example embodiments of the disclosure.

FIG. **2** illustrates a functional block diagram of a circuit that a luminaire can comprise in accordance with some example embodiments of the disclosure.

FIG. **3** illustrates a state table for a circuit that a luminaire can comprise in accordance with some example embodiments of the disclosure.

FIG. **4** illustrates a schematic of a circuit that a luminaire can comprise in accordance with some example embodiments of the disclosure.

Many aspects of the disclosure can be better understood with reference to the above drawings. The drawings illustrate only example embodiments and are therefore not to be considered limiting of the embodiments described, as other equally effective embodiments are within the scope and spirit of this disclosure. The elements and features shown in the drawings are not necessarily drawn to scale, emphasis instead being placed upon clearly illustrating principles of the embodiments. Additionally, certain dimensions or positionings may be exaggerated to help visually convey certain principles. In the drawings, similar reference numerals among different figures designate like or corresponding, but not necessarily identical, elements.

DESCRIPTION OF EXAMPLE EMBODIMENTS

In some example embodiments of the disclosure, a luminaire can comprise multiple groups of light emitting diodes of different color temperatures and a constant current power supply for powering the light emitting diodes. The power supply can utilize a switching scheme that can turn each group of light emitting diodes on and off to change the color temperature of the luminaire. In some example embodiments, the power supply can further vary the relative intensities of the light emitting diodes to manipulate the color temperature of the luminaire within a range.

For example, the luminaire can comprise a 3,000 K group of light emitting diodes and a 4,000 K group of light emitting diodes. When only the 3,000 K group is on, the luminaire can deliver 3,000 K illumination. When only the 4,000 K group is on, the luminaire can deliver 4,000 K illumination. When the 3,000 K group and the 4,000 K group are both on, the luminaire can deliver 3,500 K illumination. If the 4,000 K group of light emitting diodes is concurrently operated at a low lumen output and the 3,000 K group is operated at a high lumen output, the luminaire may deliver illumination of another selected color temperature, for example 3,100 K.

In some example embodiments, a controller can adjust lumen output automatically to maintain constant delivered lumens across multiple color temperatures or to suit application requirements. The controller implements the adjustment utilizing programmable driver current and/or via turning on and off various groups of light emitting diodes. Configurable color temperature or lumen output can function in combination with integral dimming, for example to facilitate interface with building automation, sensors, and dimmers.

In some example embodiments, luminaires can achieve an additional level of flexible configuration at a distribution center using interchangeable optics. For example, primary optics can provide medium distribution (e.g. spacing criteria equals 1.0), while a diffuser or concentrator lens can be used to achieve wide distribution (e.g. spacing criteria equals 1.4), and narrow distribution (e.g. spacing criteria equals 0.4).

In some example embodiments, a luminaire's configuration of delivered lumens and color temperatures can be set at the factory, at distribution, or in the field. To meet current and emerging code compliance, performance markings on a luminaire can indicate and correspond to the desired setting. Economical, field-installed nameplates can identify the various electrical and optical performance ratings and, when installed, permanently program the delivered lumens and color temperature. Other settings, such as dimming protocols, can likewise be configured. The interface between the nameplate and internal logic can use mechanical, electrical or optical means, for example.

Accordingly, in some embodiments of the disclosure, the technology provides product markings and supports regulatory compliance. For example, nameplates can indicate energy codes and rebate opportunities, for compliance with product labeling and to facilitate compliance confirmation by local authorities who may have jurisdiction.

Some representative embodiments will be further described hereinafter with example reference to the accompanying drawings that describe representative embodiments of the present technology. In the drawings, FIG. **1** illustrates views of a representative luminaire **100**; FIG. **2** illustrates a functional block diagram of a representative circuit **200** that the luminaire **100** can comprise; FIG. **3** illustrates a representative state table for the circuit **200**; and FIG. **4** illustrates a representative schematic for the circuit **200**. The technology may, however, be embodied in many different forms and should not be construed as limited to the embodiments set forth herein; rather, these embodiments are provided so that this disclosure will be thorough and complete, and will fully convey the scope of the technology to those appropriately skilled in the art.

Referring now to FIG. **1**, multiple views of the luminaire **100** are shown. FIG. **1**A illustrates a side perspective view of the luminaire **100**. FIG. **1**B illustrates a top perspective view of the luminaire **100**. FIG. **1**C illustrates a view of the light-emitting bottom of the luminaire **100**, showing a lens **120** in a light-emitting aperture **115** of the luminaire **100**. FIG. **1**D illustrates a view of the light-emitting bottom of the luminaire **100** with the lens **120** removed from the light-emitting aperture **115** of the luminaire. FIG. **1**E illustrates a view of the light-emitting bottom of the luminaire **100** with the lens **120** and an associated reflector **130** removed from the light-emitting aperture **115** of the luminaire. FIG. **1**F illustrates a cutaway perspective view of the luminaire **100**. FIG. **1**G illustrates another cutaway perspective view of the luminaire **100**. FIG. **1**H illustrates another cutaway view of the luminaire **100**. FIGS. **1**I, **1**J, and **1**K provide detailed views of a portion of the luminaire **100** comprising a cover **126** and an associated access aperture **129** for providing internal access to the luminaire **100**. In FIG. **1**I, the cover **126** is fully removed. In FIG. **1**J, the cover **126** is positioned adjacent the access aperture **129**, for example in connection with attachment or removal of the cover **126**. In FIG. **1**K, the cover **126** is attached to the luminaire **100**.

As best seen in the views of FIGS. **1**A and **1**B, the illustrated example luminaire **100** is suited for inserting in an aperture in a ceiling to provide overhead lighting. In this example embodiment, the luminaire **100** can be characterized as an overhead light or a recessed ceiling light. Various other indoor and outdoor luminaires that may be mounted in a wide range of orientations can be substituted for the luminaire **100** illustrated in FIG. **1**.

The illustrated example luminaire **100** of FIG. **1** comprises a housing **105** that is circular with a protruding rim **110** that extends circumferentially about the housing **105**. When the luminaire **100** is installed in a ceiling aperture, the rim **100** circumscribes and covers the edge of the ceiling aperture for aesthetics, for support, and for blocking of

debris from above the ceiling. Hanger clips **102** hold the luminaire **100** in place in installation.

As best illustrated in FIGS. **1**I, **1**J, and **1**K, the example luminaire **100** comprises an access aperture **129** and an associated cover **126**. The access aperture **129** provides access to the interior of the luminaire housing **105**, for example in the field and/or during luminaire installation. An installer can remove the cover **126** and manually set a dual inline pin (DIP) switch **131** to configure the luminaire **100** for long-term operation providing illumination with a selected color temperature, a selected lumen output, and/or a selected photometric distribution. As illustrated, the dual inline pin switch **131** is mounted on a circuit board adjacent the access aperture **129**, thereby facilitating convenient and efficient access in the field or at a distribution center, for example.

An electrical cable **127** extends through a wiring aperture **103** in the cover **126**. The electrical cable **127** terminates in a plug **132** that mates with a receptacle **133** that is mounted inside the housing **105** adjacent the access aperture **129** for convenient field access.

As illustrated, the example cover **126** comprises two notches **123**, **124** that each receives a respective screw **128** for holding the cover **126** in place. The notch **123** is disposed on the right side of the cover **126** and is sized to receive one of the screws **128**. Meanwhile, the notch **124** is disposed on a left side of the cover **126** and is sized to receive the other screw **128**.

The left notch **124** and the right notch **123** are oriented so that the cover **126** is rotatable about the right screw **128** when the right screw **128** is loosely disposed in the right notch **123**. In other words, cover rotation can occur when the right screw **128** is in the right notch **123** with threads engaged but prior to tightening. In this position, the cover **126** can rotate clockwise about the right screw **128**. Thus, the right screw **128** provides an axis of rotation for the cover **126**. This clockwise rotation facilitates convenient manipulation of the cover **126** by a person working the cover **126** to cover the access aperture **129**, with the screws **128** engaged but not fully tightened. The clockwise rotation of the cover **126** about the right screw **128** provides the person with a capability to slide the left notch **124** of the cover **126** conveniently under the head of the left screw **128**. Once the cover **126** is rotated so the left notch **124** is under the head of the left screw **128**, the person (for example an installer) can tighten the two screws **128** to secure the cover **126**.

To remove the cover **126**, the person loosens the two screws **128** and then rotates the cover **126** counterclockwise about the right screw **128** so that the left notch **124** moves out from under the head of the left screw **128**. Once the left notch **124** is free from the left screw **128**, the installer can pull the right notch **123** out from under the right screw **128** to fully remove the cover **126**.

As best seen in the views of FIGS. **1**A, **1**C, **1**F, and **1**G, the lens **120** of the luminaire **100** is positioned adjacent the lower, exit side of the light-emitting aperture **115**. As illustrated, the lens **120** can mix and blend light emitted by two groups of light emitting diodes **150**, **155**, with each group having a different color temperature. In some embodiments, the two groups of light emitting diodes **150**, **155** may have color temperatures that differ by at least 500 Kelvin, for example. The group of light emitting diodes **150** can be characterized as one light emitting diode light source, while the group of light emitting diodes **155** can be characterized as another light emitting diode light source. Other embodiments of a light emitting diode light source may have a single light emitting diode or more light emitting diodes than the embodiment illustrated in FIG. **1**. A reflector **130** is disposed in and lines the aperture **115** to guide and manage the emitted light between the light emitting diodes **150**, **155** and the lens **120**. In some embodiments, an upper lens (not illustrated) replaces the reflector **130**.

The light emitting diodes **150**, **155** are mounted on a substrate **125**, for example a circuit board, and form part of a circuit **200**. In the illustrated embodiment, the light emitting diodes **150**, **155** are interspersed. In other embodiments, the light emitting diodes **150**, **155** may be separated from one another or spatially segregated according to color temperature or other appropriate parameter. As discussed in further detail below, the circuit **200** supplies electricity to the light emitting diodes **150**, **155** with a level of flexibility that facilitates multiple configurations suited to different applications and installation parameters.

Turning to FIGS. **2**, **3**, and **4**, some example embodiments of the circuit **200** will be discussed in further detail with example reference to the luminaire **100**. The circuit **200** can be applied to other indoor and outdoor luminaires.

Referring now to FIG. **2**, this figure illustrates an embodiment of the circuit **200** in an example block diagram form. The circuit **200** comprises a DC power supply **205** for supplying electrical energy that the circuit **200** delivers to the light emitting diodes **150**, **155**. In an example embodiment, the circuit **200** comprises a light emitting diode driver.

The dual inline pin switch **131** comprises individual switches **210** that provide an input for configuring the luminaire **100** to operate at a selected color temperature. In the illustrated embodiment, the circuit **200** comprises two manual switches **210**. Other embodiments may have fewer or more switches **210**. In various embodiments, the switches **210** can be mounted to the housing **105** of the luminaire **100**, for example within the housing **105** (as illustrated in FIG. **1** and discussed above) or on an exterior surface of the housing **105**. In some embodiments, the switches **210** are mounted on the substrate **125**. In some embodiments, the switches **210** are implemented via firmware or may be solid state.

As an alternative to the illustrated dual inline pin switch **131**, the input can comprise multiple DIP switches, one or more single in-line pin packages (SIP or SIPP), one or more rocker switches, one or more reed switches, one or more magnetic switches, one or more rotary switches, one or more rotary dials, one or more selectors or selector switches, one or more slide switches, one or more snap switches, one or more thumbwheels, one or more toggles or toggle switches, one or more keys or keypads, or one or more buttons or pushbuttons, to mention a few representative examples without limitation.

As further discussed below, a controller **215** operates the light emitting diodes **150**, **155** according to state of the switches **210**. In some example embodiments, the controller **215** comprises logic implemented in digital circuitry, for example discrete digital components or integrated circuitry. In some example embodiments, the controller **215** utilizes microprocessor-implemented logic with instructions stored in firmware or other static or non-transitory memory.

In the illustrated embodiment, the outputs of the controller **215** are connected to two MOSFET transistors **160** to control electrical flow through two light emitting diodes **150**, **155**. The illustrated MOSFET transistors **160** provide one example and can be replaced with other appropriate current control devices or circuits in various embodiments. The switches **210** thus configure the luminaire **100** to operate with either or both of the light emitting diodes **150**, **155**. The light emitting diodes **150**, **155** illustrated in FIG. **2**

may represent two single light emitting diodes or two groups of light emitting diodes, for example.

FIG. **3** illustrates a representative table **300** describing operation of the circuit **100** according to some example embodiments. In the example of FIG. **3**, the light emitting diode **150** produces light having a color temperature of 3,000 Kelvin, and the light emitting diode **155** produces light having a color temperature of 4,000 Kelvin.

As shown in the example table **300**, when both of the switches **210** are in the on state, the controller **215** causes the light emitting diode **155** to be off and the light emitting diode **150** to be on. Accordingly, the luminaire **100** emits illumination having a color temperature of 3,000 Kelvin.

When both of the switches **210** are in the off state, the controller **215** causes the light emitting diode **155** to be on and the light emitting diode **150** to be off. Accordingly, the luminaire **100** emits illumination having a color temperature of 4,000 Kelvin.

When one of the switches **210** is in the off state and the other of the switches **210** is on the on state, the controller **215** causes the light emitting diode **155** to be on and the light emitting diode **150** to be on. The luminaire **100** thus emits illumination having a color temperature of 3,500 Kelvin. In some other example embodiments, the controller **215** can adjust the light output of one or both of the light emitting diodes **150**, **155** to set the color temperature to a specific value with the range of 3,000 to 4,000 Kelvin.

Accordingly, the controller **215** maps the four configurations of the two switches **210** to three states for configuring the two light emitting diodes **150**, **155** for permanent or long-term operation. Mapping two switch configurations to a single mode of long-term operation can simplify configuration instructions and reduce errors during field configuration. The resulting configurations support multiple color temperatures of illumination from a single luminaire **100**.

Some example embodiments support fewer or more than three states of illumination. For example, in one embodiment, the luminaire **100** comprises three strings of light emitting diodes **150** that have different color temperatures, such as 3,000 Kelvin, 2,700 Kelvin, and 4,000 Kelvin. In this example, in addition to the states illustrated in FIG. **3** and discussed above, the switching logic can support a fourth state in which only the 2,700 Kelvin string is on.

FIG. **4** illustrates a schematic of an example embodiment of the circuit **200**. The schematic of FIG. **4** provides one example implementation of the block diagram illustrated in FIG. **3**.

As illustrated in FIG. **4** in schematic form, the circuit **200** conforms to the foregoing discussion of the block diagram format of FIG. **3**. In FIG. **4**, the light emitting diodes **150**, **155** of FIG. **3** are respectively represented with groups of light emitting diodes **150**, **155**. Additionally, the schematic details include a thermal protective switch **305** for guarding against overheating. FIG. **4** thus provides one example schematic for an embodiment of the electrical system of the luminaire **100** illustrated in FIG. **1** and discussed above.

As will be appreciated by those of ordinary skill, the textual and illustrated disclosure provided herein supports a wide range of embodiments and implementations. In some non-limiting example embodiments of the disclosure, a luminaire can comprise: a housing; a substrate disposed in the housing; a first plurality of light emitting diodes that are mounted to the substrate and that have a first color temperature; a second plurality of light emitting diodes that are mounted to the substrate and that have a second color temperature; and a plurality of manual switches that are disposed at the housing for permanently configuring the luminaire to: provide illumination of the first color temperature by enabling the first plurality of light emitting diodes; provide illumination of the second color temperature by enabling the second plurality of light emitting diodes; and provide illumination of a third color temperature that is between the first color temperature and the second color temperature by enabling the first plurality of light emitting diodes and the second plurality of light emitting diodes.

In some example embodiments of the luminaire, the housing can comprise an aperture that is configured for emitting area illumination, and the substrate is oriented to emit light through the aperture. In some example embodiments of the luminaire, the plurality of manual switches are mounted to the substrate. In some example embodiments of the luminaire, the plurality of manual switches are mounted in the housing. In some example embodiments of the luminaire, the plurality of manual switches are mounted to the housing. In some example embodiments of the luminaire, the plurality of manual switches comprise a dual inline pin (DIP) switch. In some example embodiments of the luminaire, the plurality of manual switches provide two switch states, and each of the two switch states provides illumination of the third color temperature by enabling the first plurality of light emitting diodes and the second plurality of light emitting diodes. In some example embodiments of the luminaire, the housing is circular and comprises a lip configured for extending around an aperture in a ceiling. In some example embodiments of the luminaire, the housing comprises a wiring port disposed on a side of the housing. In some example embodiments of the luminaire, the housing comprises a light-emitting aperture in which the substrate is disposed. In some example embodiments, the luminaire further comprises: an aperture disposed at a lower side of the housing; a lens disposed at the aperture for refracting light emitted by the first and second light emitting diodes; and a reflector that is disposed between the lens and the light emitting diodes and that is operative to reflect light between the first and second light emitting diodes and the lens. In some example embodiments of the luminaire, the housing is circular and comprises a lip configured for extending around an aperture in a ceiling. In some example embodiments of the luminaire, the housing comprises a wiring port disposed on a side of the housing. In some example embodiments of the luminaire, the housing forms a cavity associated with the aperture. In some example embodiments of the luminaire, the first and second light source are mounted to a substrate that is disposed at an end of the cavity. In some example embodiments, the luminaire further comprises a reflector that is disposed in the cavity between the lens and the first and second light sources, the reflector operative to reflect light between the first and second light sources and the lens.

Technology for providing a configurable a luminaire has been described. Many modifications and other embodiments of the disclosures set forth herein will come to mind to one skilled in the art to which these disclosures pertain having the benefit of the teachings presented in the foregoing descriptions and the associated drawings. Therefore, it is to be understood that the disclosures are not to be limited to the specific embodiments disclosed and that modifications and other embodiments are intended to be included within the scope of this application. Although specific terms are employed herein, they are used in a generic and descriptive sense only and not for purposes of limitation.

What is claimed is:

1. A luminaire comprising:

an input settable in a first, a second, a third, and a fourth state;

a first light source having a first color temperature;

a second light source having a second color temperature; and

a controller connected to the input, the first light source, and the second light source, the controller configured to:

power the first light source when the input is in the first state;

power the second light source when the input is in the second state;

power the first light source and the second light source when the input is in the third state; and

power the first light source and the second light source when the input is in the fourth state.

2. The luminaire of claim **1**, wherein the input comprises a first switch and a second switch.

3. The luminaire of claim **2**, wherein the first state comprises the first switch off and the second switch off,

wherein the second state comprises the first switch on and the second switch on,

wherein the third state comprises the first switch on and the second switch off, and

wherein the fourth state comprises the first switch off and the second switch on.

4. The luminaire of claim **3**, wherein when the input is set to the first state, the luminaire emits light of the first color temperature,

wherein when the input is set to the second state, the luminaire emits light of the second color temperature,

wherein when the input is set to the third state, the luminaire emits light of a third color temperature that is between the first color temperature and the second color temperature, and

wherein when the input is set to the fourth state, the luminaire emits light of the third color temperature.

5. The luminaire of claim **1**, wherein the first light source comprises a first light emitting diode,

wherein the second light source comprises a second light emitting diode, and

wherein the first color temperature is separated from the second color temperature by no less than 500 Kelvin.

6. The luminaire of claim **1**, wherein the first light source comprises a first bank of light emitting diodes, and

wherein the second light source comprises a second bank of light emitting diodes.

7. The luminaire of claim **1**, wherein the controller comprises digital logic,

wherein the input comprises a dual inline pin (DIP) switch mounted on a circuit board, and

wherein a first configuration of the DIP switch defines the first state, a second configuration of the DIP switch defines the second state, a third configuration of the DIP switch defines the third state, and a fourth configuration of the DIP switch defines the fourth state.

8. The luminaire of claim **1**, further comprising a housing that encloses the first light source, the second light source, the input, and the controller, the housing comprising:

a first aperture that provides access to the input for setting the input manually to the first state, the second state, the third state, or the fourth state during luminaire installation; and

a cover covering the aperture and comprising a second aperture that is sized to receive an electrical cable for powering the luminaire.

9. The luminaire of claim **8**, wherein the input comprises a dual inline pin (DIP) switch mounted to the housing adjacent the first aperture, and

wherein the cover further comprises:

a first notch that is disposed on a first side of the cover and that is sized to receive a first fastener for fastening the cover to the housing; and

a second notch that is disposed on a second side of the cover and that is sized to receive a second fastener for fastening the cover to the housing,

wherein the first notch and the second notch are oriented so that the cover is rotatable about the first fastener when the first fastener is loosely disposed in the first notch, with the second fastener disposable in the second notch during said rotation of the cover.

10. A luminaire comprising:

a first light emitting diode light source configured to produce illumination of a first color temperature;

a second light emitting diode light source configured to produce illumination of a second color temperature that is different than the first color temperature;

an input settable in a first plurality of states; and

a circuit that is connected to the first light emitting diode light, the second light emitting diode light source, and the input and that is operable to:

map the first plurality of states into a second plurality of states, wherein the first plurality of states is greater than the second plurality of states; and

control the first light emitting diode light source and the second light emitting diode light source according to the second plurality of states.

11. The luminaire of claim **10**, wherein mapping the first plurality of states into the second plurality of states comprises producing one state in the second plurality of states for each of two states in the first plurality of states.

12. The luminaire of claim **10**, wherein the first plurality of states comprises a first state and a second state,

wherein the second plurality of states comprises a third state, and

wherein mapping the first plurality of states into the second plurality of states comprises mapping the first state and the second state into the third state.

13. The luminaire of claim **12**, wherein in the first state, the luminaire produces illumination of the first color temperature using the first light emitting diode light source,

wherein in the second state, the luminaire produces illumination of the second color temperature using the second light emitting diode light source,

wherein in the third state, the luminaire produces illumination of the third color temperature using the first light emitting diode light source and the second light emitting diode light source, and

wherein the third color temperature is between the first color temperature and the second color temperature.

14. The luminaire of claim **10**, wherein the input comprises a dual inline pin (DIP) switch,

wherein the luminaire further comprising a housing that encloses the first light emitting diode light source, the second light emitting diode light source, the DIP switch, and the circuit,

wherein the housing comprises:

a first aperture that provides access to the DIP switch for state selection during luminaire installation, and

a cover configured for covering the aperture.

15. The luminaire of claim **10**, wherein the first light emitting diode light source comprises at least two light emitting diodes,

wherein the second light emitting diode light source comprises at least two other light emitting diodes,

wherein the circuit comprises:

digital logic; and

a light emitting diode driver that is controlled by the digital logic,

wherein there are four states in the first plurality of states,

wherein there are three states in the second plurality of states, and

wherein the three states correspond to three different color temperatures of illumination produced by the luminaire.

16. A luminaire comprising:

a housing comprising an aperture;

a lens disposed at the aperture;

a first light source and a second light source that are mounted in the housing and that are oriented to emit light through the aperture and the lens for area illumination, wherein the first light source has a first color temperature and the second light source has a second color temperature; and

one or more switches that are mounted at the housing and that are operable to configure the luminaire in a first long-term operating configuration, a second long-term operating configuration, and a third long-term operating configuration,

wherein in the first long-term operating configuration, the first light source is active, the second light source is inactive, and the luminaire is configured to emit light of the first color temperature,

wherein in the second long-term operating configuration, the first light source is inactive, the second light source is active, and the luminaire is configured to emit light of the second color temperature, and

wherein in the third long-term operating configuration, the first light source is active, the second light source is active, and the luminaire is configured to emit light of a third color temperature that is between the first color temperature and the second color temperature.

17. The luminaire of claim **16**, wherein the one or more switches have two switch states that each produce the third long-term operating configuration.

18. The luminaire of claim **16**, wherein the first light source comprises at least one light emitting diode, and

wherein the second light source comprises at least one other light emitting diode.

19. The luminaire of claim **18**, wherein the luminaire is configured for mounting to a ceiling,

wherein the housing further comprises a cover sized to cover the aperture, and

wherein the one or more switches are disposed in the housing adjacent the aperture for access during luminaire installation.

20. The luminaire of claim **19**, wherein the one or more switches comprise a dual inline pin (DIP) switch.

* * * * *