March 25, 1958 W. F. WINGARD 2,828,393

ELECTRICAL ASSEMBLY

Filed Nov. 10, 1953

FIG. 1.

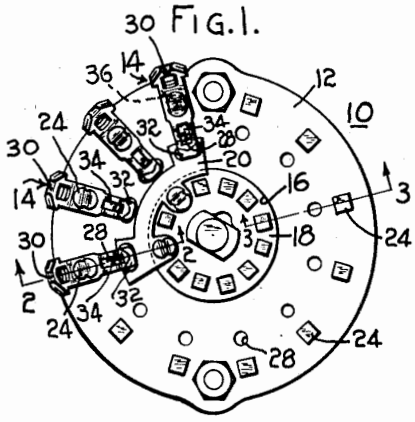

FIG. 2.

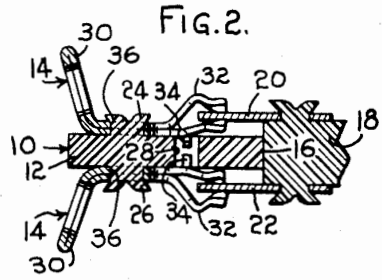

FIG. 3.

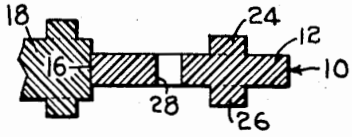

FIG. 4.

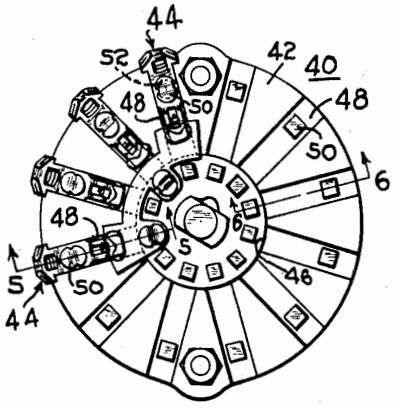

FIG. 5.

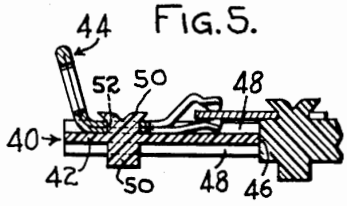

FIG. 6.

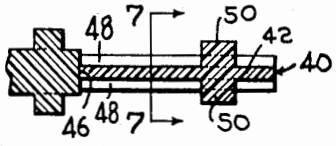

FIG. 7.

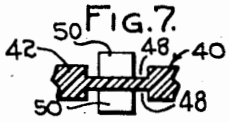

INVENTOR:
WILLIAM F. WINGARD
BY Robert E. Ross
ATTORNEY.

United States Patent Office

2,828,393

Patented Mar. 25, 1958

1

2,828,393

ELECTRICAL ASSEMBLY

William F. Wingard, Newtonville, Mass., assignor, by mesne assignments, to United-Carr Fastener Corporation, Boston, Mass., a corporation of Delaware

Application November 10, 1953, Serial No. 391,234

2 Claims. (Cl. 200—166)

This invention relates generally to electrical assemblies, and has particular reference to a switch wafer assembly.

In the construction of certain types of rotary and push-button switches, an insulating support plate is provided with a series of contact members mounted thereon to make selective electrical contact with a blade on a rotor or slider.

The contact members are usually formed of spring brass or bronze, and are customarily attached to the support plate by metal rivets piercing the plate. The assembly of such contacts in this manner is a relatively expensive operation, since the rivet and contact must be properly aligned by hand under a suitable press. In cases where contacts are needed on both sides of the plate the assembly operation is even more difficult, and in cases where the contacts on opposite sides of the plate must be insulated from each other, special washers must also be included in the assembly to prevent the rivet from making an electrical circuit between the contacts it retains in assembly.

The object of this invention is to provide a switch wafer assembly in which the need for separate rivets to retain the contacts in assembly is eliminated.

A further object of the invention is to provide a switch wafer assembly in which the means retaining the contacts in assembly therein is an integral part of the support plate.

Other objects of the invention will, in part, be obvious and will, in part, appear hereinafter.

In the drawing:

Fig. 1 is a top plan view of a switch wafer assembly embodying the features of the invention.

Fig. 2 is a view in section taken on line 2—2 of Fig. 1.

Fig. 3 is a view in section taken on line 3—3 of Fig. 1.

Fig. 4 is a top plan view of a modified form of switch wafer embodying the features of the invention.

Fig. 5 is a view in section taken on line 5—5 of Fig. 4.

Fig. 6 is a view in section taken on line 6—6 of Fig. 4.

Fig. 7 is a view in section taken on line 7—7 of Fig. 6.

Referring to Figs. 1–3 of the drawing, there is illustrated a switch wafer assembly **10**, which comprises a support plate **12** and a series of contact members **14** assembled thereon.

The wafer assembly **10** is of the type which is provided with a central opening **16** to receive a rotor **18** having a circuit completing blades **20** and **22** mounted on opposite sides thereof. The support plate **12** is formed of a single piece of molded plastic and is provided with a series of integral protruding pins **24** and **26** on opposite sides thereof disposed about the central opening **16**. Each pair of pins on opposite sides of the support plate has an aperture **28** associated therewith for a purpose to appear hereinafter.

The contact members **14** are formed of a strip of metal bent back on itself to provide a soldering terminal **30** at one end and superimposed flexible contact blade re-

2

ceiving jaws **32** at the other end to permit the blades on the rotor to pass therebetween. Each contact member **14** is also provided with a projecting tang **34** and an aperture **36** in the medial portion.

The contact members **14** are assembled onto the support plate by placing them thereon so that an integral pin on the plate extends through the aperture **36**, and the tang **34** projects into the aperture **28** associated therewith. The pin is then headed or deformed by a suitable tool, with the application of heat, if required by the type of plastic of which the plate is made, so that the end of the pin spreads laterally over the contact member and retains it tightly against the plate, and the projecting tang **34** prevents rotation of the contact member on the plate.

It is evident that a contact member may be assembled onto both sides of the plate, as illustrated in Fig. 2, without any electrical contact resulting from such assembly.

It is also evident that although pins are provided about the entire periphery of the opening in the plate, contact members need be assembled only onto such pins as are necessary to provide the desired circuits.

Referring to Figs. 4–7 of the drawing, there is illustrated a modified form of switch wafer **40**, comprising a support plate **42** and a series of contacts **44** assembled therein. The support plate **42** is provided with a central opening **46**, and a series of slot-like radially extending elongated recesses **48** disposed thereabout, with projecting pins **50** disposed in the slots.

The contacts **44** are similar to the contacts **14** previously described, with the exception that no projecting tang is necessary. The contacts **44** have an aperture **52** and are seated in the elongated recesses **48** with a pin **50** extending through the aperture **52**, said pin being headed or deformed above the contact as previously described to retain it in place on the support plate. The fact that the contact **44** is seated in the elongated recesses **48** prevents rotation of the contact on the support plate.

The illustrated switch wafers are particularly adapted for economical assembly, since only the contact member and the support plate need be handled during assembly, no separate rivets or washers being necessary.

Since certain obvious changes may be made in the device without departing from the scope of the invention, it is intended that all matter contained herein be interpreted in an illustrative and not in a limiting sense.

I claim:

1. A switch wafer assembly, comprising a support plate and a series of contact members mounted on a surface thereof, said support plate being formed of a single piece of molded synthetic organic thermoplastic material and having a series of integral contact receiving pins projecting from said surface, each contact member having an aperture therethrough receiving a pin, the end of said pin being deformed to provide a laterally extending portion bearing against the upper surface of the associated contact member to retain the contact in assembly on the support plate free of any metal fastening members.

2. A switch wafer assembly as set forth in claim 1 in which the support plate has integral contact receiving pins on opposite sides for receiving and holding contacts on both sides of said supporting plate when desired.

References Cited in the file of this patent

UNITED STATES PATENTS

2,079,003	Dick	May 4, 1937
2,195,237	Bryant et al.	Mar. 26, 1940
2,594,190	Mastney	Apr. 22, 1952
2,609,570	Danielson et al.	Sept. 9, 1952

Menard v. Signify
Menard Exhibit 1015
Page 002