March 24, 1970 J. R. BAILEY ET AL 3,502,825

ELECTRICAL SLIDE SWITCH

Filed Sept. 4, 1968

FIG. 1

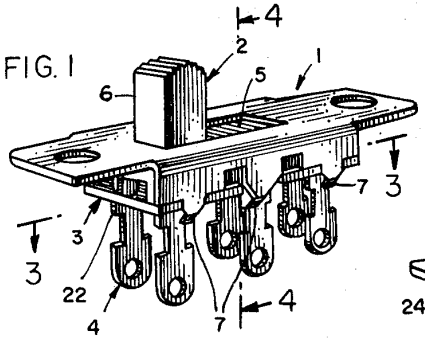

FIG. 2

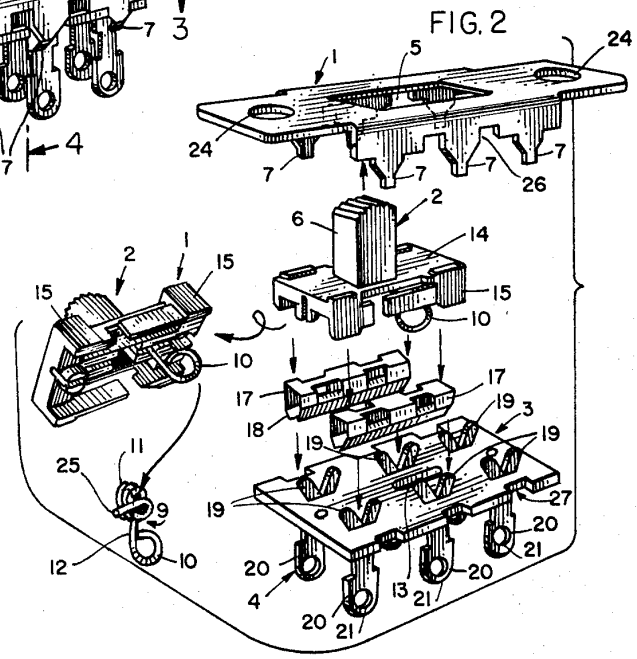

FIG. 3

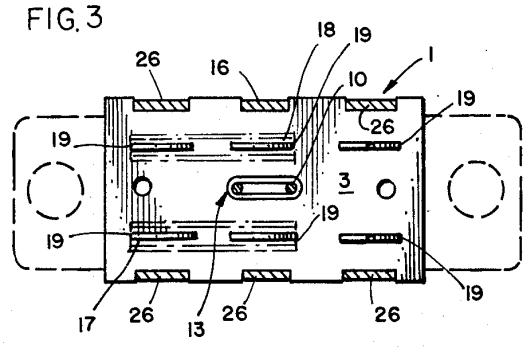

FIG. 4

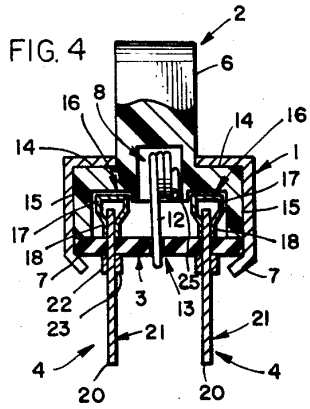

INVENTORS:

JAMES R. BAILEY

KURT LUTZENBERGER

BY: Marzall, Johnston, Cook & Root

ATT'YS

Menard v. Signify

Menard Exhibit 1016

Page 001

United States Patent Office

3,502,825
Patented Mar. 24, 1970

1

3,502,825
ELECTRICAL SLIDE SWITCH

James R. Bailey, Chicago, and Kurt Lutzenberger, Arlington Heights, Ill., assignors to Switchcraft, Inc., Chicago, Ill., a corporation of Illinois

Filed Sept. 4, 1968, Ser. No. 757,352
Int. Cl. H01h 15/00, 9/02
U.S. Cl. 200—16 5 Claims

ABSTRACT OF THE DISCLOSURE

An electrical slide switch is provided in which elongated resilient means are mounted between actuator means and a base portion with a slidable conductor disposed to make electrical contact with electrical leads and being responsive for translational movement to said actuator means.

This invention relates to an electric switch, and more particularly to an improved type of electric switch having a sliding contact and characterized by simplicity of structure and operation.

One object of the invention is to provide an electrical switch having a minimum number of parts.

Another object of the invention is to provide an electric slide switch having elongated resilient means mounted between actuator means and a base portion to bias the actuator means to a predetermined position.

Still another object of the invention is to provide an electric slide switch which can be mechanically held in one position of actuation and which will automatically return to another postion when released.

A further object of the invention is to provide a new and improved slide switch which can be readily assembled and disassembled.

Other objects and advantages of the invention will be apparent from the following description in conjunction with the accompanying drawings in which preferred embodiments of the invention are illustrated.

In the drawings:

FIGURE 1 is a perspective view of a typical slide switch provided in accordance with the invention;

FIGURE 2 is an exploded view of the component parts of the slide switch shown in FIG. 1;

FIGURE 3 is a horizontal cross sectional view taken along the line 3—3 of FIG. 1; and

FIGURE 4 is a vertical sectional view taken along the lines 4—4 of FIG. 1.

Generally stated, the invention provides an electrical switch comprising a housing having an opening therein and a base portion, an actuator means disposed for translational movement within said housing and having a portion protruding through the opening in said housing for manipulation, said actuator means having a portion facing said base portion, elongated resilient means mounted at one end in said portion of said actuator means facing said base portion and at the opposite end held by said base portion, a plurality of electrical leads disposed in said base portion and electrically insulated from one another, and a slidable conductor disposed to make electrical contact with said electrical leads, said slidable conductor being responsive for translational movement to said actuator means thereby effecting a selection of said electrical leads.

The elongated resilient means is preferably a wire made of resilient material, for example, a spring metal. Another suitable type of resilient material can be employed.

The actuator means is preferably biased by the elongated resilient means so that the manipulating portion thereof protruding through the opening in the housing normally abuts against one end of the side of said opening. Thus, when the actuator means is moved manually and then released, it will automatically return to its original position. This type of switch is sometimes referred to as a momentary or non-locking switch.

2

One feature of the invention is the provision of an actuator means commonly referred to as a button, which is molded from nylon, a phenol-formaldehyde resin, or other suitable non-electrically conducting material, so as to have a hollow portion which faces the base portion, commonly referred to as a terminal board. The base portion, or terminal board, in turn is provided with a slot or opening which is adapted to receive one end of the elongated resilient means, the other end being inserted into the hollow portion of the actuator means. By using a spring wire and bending the opposite ends into a loop or a plurality of loops, it is possible to provide an elongated resilient means which can easily be inserted into the hollow portion of the actuator means at one end and into the slot or opening in the base or terminal board at the opposite end. In this way, the actuator means can be biased so that the portion protruding through the opening in the housing abuts against one end of said opening.

Referring to the drawings, it will be seen that FIG. 1 illustrates an assembled slide switch provided in accordance with the invention having an housing generally indicated at **1**, an actuator means or button generally indicated at **2**, a base portion or terminal board generally indicated at **3**, and a plurality of electrical leads or terminals generally indicated at **4**.

As shown in FIG. 2, the housing **1** has an opening **5** through which the upper part **6** of the actuator means **2** protrudes. The housing **1** is usually made of metal, or other bendable material, and has depending side portions **7** which can be bent inwardly as shown in FIGS. 1 and 4 to clamp the base or terminal board **3** in place.

The actuator means **2** has a hollow portion **8** (see FIG. 4) which is adapted to receive one end of the elongated resilient means **9**, the latter as shown in the drawings preferably consisting of a wire made from spring metal or other suitable material having a slingle loop **10** at one end and a plurality of loops **11** at the opposite end connected by an intermediate portion **12**. The end having the plurality of loops **11** is inserted into the hollow portion **8** of the actuator means **2**.

The base portion or terminal board **3** is made of an electrically insulating material, such as molded fiber or the like, and is provided with a slot or opening **13** which is adapted to receive the end loop **10** of the spring **9**. Thus, the torsion spring **9** is held at one end by the actuator button and at the other end by the base portion or terminal board and the torsion can be adjusted to cause the protruding portion **6** of the actuator button **2** to be biased against the side of the opening **5** in the housing **1**. The invention is not limited to the use of a spring **9** having loops **10** and **11** or to the use of any particular number of loops. However, this arrangement makes the assembly of the switch very simple and the number of loops can be varied as desired, depending upon the space available in the hollow portion **8** in the actuator means **2**, and in the opening **13** of the base portion or terminal board **3**.

The actuator means **2** has a flat top portion **14** and depending side portions **15** which are in sliding contact with the inner sides of the housing **1**. The inner portion of the actuator means **2** is molded with recesses **16** which are adapted to receive the slidable conductors **17**. The slidable conductors **17** are made of metal or other electrically conducting material and have lower portions **18** which maintain electrical sliding contact with the upper ends **19** of the electric terminals **4**. Since the slidable conductors **17** are seated in recesses **16** of the actuator means **2**, they slide in contact with the upper ends **19** in response to translational movement of said actuator means, thereby

affecting a selection of electrical terminals. Wires or other electrical conductors are normally connected to the lower ends **20** of the electrical terminals **4**. This is facilitated by the provision of openings or holes **21**. The electrical terminals are held in place in one direction by the V-shaped structure as shown in FIG. 2, and in another direction by an offset portion just below the terminal board having ears **22** and **23** which are bent in opposite directions. While the structure of the terminal board does not constitute a part of this invention, it will be noted that the terminals **4** can be inserted from below through openings or slots in the terminal board and then spread transversely as shown at **19** in FIG. 2. The housing **1** is provided with suitable openings **24** by means of which the switch can be mounted.

It will be seen that the switch illustrated can readily be assembled and disassembled. In order to assemble the switch, the terminals **4** are mounted in the terminal board **3** in the manner previously explained. The torsion spring **9** is mounted in the hollow portion of the actuator button **2** with the outwardly extending end **25** engaging a wall thereof. The slidable conductors **17** are placed over the upper ends **19** of the terminals **4** and the actuator means **2** is then moved downwardly over the slidable conductors **17** so that the tops of the latter become seated in recesses **16** in actuator means **2**, and at the same time the loop **10** of the torsion spring **19** is inserted through the opening **13** in terminal board **3**. The housing **1** is then placed over the actuator button **2** so that the protruding portion **6** passes through the opening **5** in said housing. The depending portions of the housing **26** are adapted to fit into the recesses **27** in the sides of the terminal board **3** and the depending portions **7** of the housing **1** are bent inwardly as shown in FIG. 4, thereby clamping the housing beneath the bottom of the terminal board **3** and holding the entire switch in assembled relationship. If it is desired to disassemble the switch, the procedure is reversed by bending the portions **7** outwardly, thereby permitting removal of the housing and the remainder of the component parts.

The operation of the switch is quite simple. The embodiment shown functions as a momentary switch in which the actuator means **2** is normally in the position shown in FIG. 1 and can be moved against the pressure of the torsion spring **9** until the protruding portion **6** abuts against the opposite end of opening **5** in housing **1**. This movement simultaneously moves the slidable conductors **17** from one set of terminals or electrical leads **19** to another set of terminals or electrical leads **19**.

The invention is subject to some variation and modification. The same general structure with some modification can be adapted to the manufacture of slide switches of the locking type as distinguished from those of the momentary type.

The slide switches of the invention are especially advantageous because they are made from a minimum number of parts, are inexpensive and can be assembled and disassembled in a simple manner. At the same time, they are relatively rugged and the component parts retain their assembled relationship, despite repeated use. A particular

advantage of the invention is that the specific spring structure and actuator or button structure affords better utilization of the existing space as related to the number of poles of switching available. Some known switches use the space of one pole of switching for a spring return. By burying the spring in the hollow portion of the button it is possible to provide two poles of switching as shown in the drawing. Another advantage is that projecting end **25** of the spring **9** is resiliently pressed against the inside wall of the hollow portion of the button thereby locking the spring in place so that it will not become disengaged and possibly lost when the switch is being assembled or disassembled.

The invention is hereby claimed as follows:

1. An electrical switch comprising a housing having an opening therein and a base portion, an actuator means disposed for translational movement within said housing and having a portion protruding through the opening in said housing for manipulation, said actuator means having a portion facing said base portion, elongated resilient means mounted at one end in said portion of said actuator means facing said base portion, and at the opposite end held by said base portion, a plurality of electrical leads disposed in said base portion and electrically insulated from one another, and a slidable conductor disposed to make electrical contact with said electrical leads, said slidable conductor being responsive for translational movement to said actuator means thereby effecting a selection of said electrical leads, said actuator means having a hollow portion with an opening facing said base portion, said base portion having an opening therein, and said resilient means having one end mounted in said hollow portion of said actuator means and the other end in said opening in said base portion.

2. A switch as claimed in claim **1** in which said elongated resilient means is a wire made of resilient material.

3. A switch as claimed in claim **1** in which said actuator means is biased by said resilient means so that said manipulating portion protruding through said opening in said housing normally abuts against one end of the side of said opening.

4. A switch as claimed in claim **1** in which said resilient means is detachably mounted.

5. A switch as claimed in claim **1** in which said resilient means is a wire made of resilient material and having at least one loop at each end.

References Cited

UNITED STATES PATENTS

2,221,528	11/1940	Schmitt	200—154 XR
2,868,930	1/1959	Pistey et al.	200—16 XR
3,174,002	3/1965	Golbeck	200—16

ROBERT K. SCHAEFER, Primary Examiner

J. R. SCOTT, Assistant Examiner

U.S. Cl. X.R.

200—168

Menard v. Signify

Menard Exhibit 1016

Page 003