PTO/AIA/15 (03-13)
Approved for use through 01/31/2014. OMB 0651-0032
U.S. Patent and Trademark Office; U.S. DEPARTMENT OF COMMERCE
Under the Paperwork Reduction Act of 1995 no persons are required to respond to a collection of information unless it displays a valid OMB control number

UTILITY PATENT APPLICATION TRANSMITTAL

(Only for new nonprovisional applications under 37 CFR 1.53(b))

Attorney Docket No.	13682.225908
First Named Inventor	Steven Walter Pyshos
Title	Configurable Lighting System
Express Mail Label No.	

APPLICATION ELEMENTS

See MPEP chapter 600 concerning utility patent application contents.

1. ☐ **Fee Transmittal Form** (PTO/SB/17 or equivalent)
2. ☐ **Applicant asserts small entity status.** See 37 CFR 1.27
3. ☐ **Applicant certifies micro entity status.** See 37 CFR 1.29. Applicant must attach form PTO/SB/15A or B or equivalent.
4. ☑ **Specification** [*Total Pages* 23] Both the claims and abstract must start on a new page. *(See MPEP § 608.01(a) for information on the preferred arrangement)*
5. ☑ **Drawing(s)** (35 U.S.C. 113) [*Total Sheets* 10]
6. **Inventor's Oath or Declaration** [*Total Pages* 3] *(including substitute statements under 37 CFR 1.64 and assignments serving as an oath or declaration under 37 CFR 1.63(e))*
   a. ☑ Newly executed (original or copy)
   b. ☐ A copy from a prior application (37 CFR 1.63(d))
7. ☑ **Application Data Sheet** ** See note below.* See 37 CFR 1.76 (PTO/AIA/14 or equivalent)
8. **CD-ROM or CD-R** in duplicate, large table, or Computer Program (*Appendix*)
   ☐ Landscape Table on CD
9. **Nucleotide and/or Amino Acid Sequence Submission** (*if applicable, items a. – c. are required*)
   a. ☐ Computer Readable Form (CRF)
   b. ☐ Specification Sequence Listing on:
      i. ☐ CD-ROM or CD-R (2 copies); or
      ii. ☐ Paper
   c. ☐ Statements verifying identity of above copies

ADDRESS TO: **Commissioner for Patents**
P.O. Box 1450
Alexandria, VA 22313-1450

ACCOMPANYING APPLICATION PAPERS

10. ☐ **Assignment Papers** (cover sheet & document(s))
    Name of Assignee _____
11. ☐ **37 CFR 3.73(c) Statement** (*when there is an assignee*) ☐ **Power of Attorney**
12. ☐ **English Translation Document** (*if applicable*)
13. ☐ **Information Disclosure Statement** (PTO/SB/08 or PTO-1449)
    ☐ Copies of citations attached
14. ☐ **Preliminary Amendment**
15. ☐ **Return Receipt Postcard** (*MPEP § 503*) (*Should be specifically itemized*)
16. ☐ **Certified Copy of Priority Document(s)** (*if foreign priority is claimed*)
17. ☐ **Nonpublication Request** Under 35 U.S.C. 122(b)(2)(B)(i). Applicant must attach form PTO/SB/35 or equivalent.
18. ☐ **Other:** _____

***Note**: (1) Benefit claims under 37 CFR 1.78 and foreign priority claims under 1.55 **must** be included in an Application Data Sheet (ADS).
(2) For applications filed under 35 U.S.C. 111, the application must contain an ADS specifying the applicant if the applicant is an assignee, person to whom the inventor is under an obligation to assign, or person who otherwise shows sufficient proprietary interest in the matter. See 37 CFR 1.46(b).

19. CORRESPONDENCE ADDRESS

☑ The address associated with Customer Number: 91764 **OR** ☐ Correspondence address below

Name					
Address					
City		State		Zip Code	
Country		Telephone		Email	

Signature	/Robert T. Neufeld/	Date	02-16-2017
Name (Print/Type)	Robert T. Neufeld	Registration No. (Attorney/Agent)	48394

This collection of information is required by 37 CFR 1.53(b). The information is required to obtain or retain a benefit by the public which is to file (and by the USPTO to process) an application. Confidentiality is governed by 35 U.S.C. 122 and 37 CFR 1.11 and 1.14. This collection is estimated to take 12 minutes to complete, including gathering, preparing, and submitting the completed application form to the USPTO. Time will vary depending upon the individual case. Any comments on the amount of time you require to complete this form and/or suggestions for reducing this burden, should be sent to the Chief Information Officer, U.S. Patent and Trademark Office, U.S. Department of Commerce, P.O. Box 1450, Alexandria, VA 22313-1450. DO NOT SEND FEES OR COMPLETED FORMS TO THIS ADDRESS. **SEND TO: Commissioner for Patents, P.O. Box 1450, Alexandria, VA 22313-1450.**
If you need assistance in completing the form, call 1-800-PTO-9199 and select option 2.

Privacy Act Statement

The **Privacy Act of 1974 (P.L. 93-579)** requires that you be given certain information in connection with your submission of the attached form related to a patent application or patent. Accordingly, pursuant to the requirements of the Act, please be advised that: (1) the general authority for the collection of this information is 35 U.S.C. 2(b)(2); (2) furnishing of the information solicited is voluntary; and (3) the principal purpose for which the information is used by the U.S. Patent and Trademark Office is to process and/or examine your submission related to a patent application or patent. If you do not furnish the requested information, the U.S. Patent and Trademark Office may not be able to process and/or examine your submission, which may result in termination of proceedings or abandonment of the application or expiration of the patent.

The information provided by you in this form will be subject to the following routine uses:

1. The information on this form will be treated confidentially to the extent allowed under the Freedom of Information Act (5 U.S.C. 552) and the Privacy Act (5 U.S.C 552a). Records from this system of records may be disclosed to the Department of Justice to determine whether disclosure of these records is required by the Freedom of Information Act.
2. A record from this system of records may be disclosed, as a routine use, in the course of presenting evidence to a court, magistrate, or administrative tribunal, including disclosures to opposing counsel in the course of settlement negotiations.
3. A record in this system of records may be disclosed, as a routine use, to a Member of Congress submitting a request involving an individual, to whom the record pertains, when the individual has requested assistance from the Member with respect to the subject matter of the record.
4. A record in this system of records may be disclosed, as a routine use, to a contractor of the Agency having need for the information in order to perform a contract. Recipients of information shall be required to comply with the requirements of the Privacy Act of 1974, as amended, pursuant to 5 U.S.C. 552a(m).
5. A record related to an International Application filed under the Patent Cooperation Treaty in this system of records may be disclosed, as a routine use, to the International Bureau of the World Intellectual Property Organization, pursuant to the Patent Cooperation Treaty.
6. A record in this system of records may be disclosed, as a routine use, to another federal agency for purposes of National Security review (35 U.S.C. 181) and for review pursuant to the Atomic Energy Act (42 U.S.C. 218(c)).
7. A record from this system of records may be disclosed, as a routine use, to the Administrator, General Services, or his/her designee, during an inspection of records conducted by GSA as part of that agency's responsibility to recommend improvements in records management practices and programs, under authority of 44 U.S.C. 2904 and 2906. Such disclosure shall be made in accordance with the GSA regulations governing inspection of records for this purpose, and any other relevant (*i.e.*, GSA or Commerce) directive. Such disclosure shall not be used to make determinations about individuals.
8. A record from this system of records may be disclosed, as a routine use, to the public after either publication of the application pursuant to 35 U.S.C. 122(b) or issuance of a patent pursuant to 35 U.S.C. 151. Further, a record may be disclosed, subject to the limitations of 37 CFR 1.14, as a routine use, to the public if the record was filed in an application which became abandoned or in which the proceedings were terminated and which application is referenced by either a published application, an application open to public inspection or an issued patent.
9. A record from this system of records may be disclosed, as a routine use, to a Federal, State, or local law enforcement agency, if the USPTO becomes aware of a violation or potential violation of law or regulation.

PTO/AIA/14 (11-15)
Approved for use through 04/30/2017. OMB 0651-0032
U.S. Patent and Trademark Office; U.S. DEPARTMENT OF COMMERCE
Under the Paperwork Reduction Act of 1995, no persons are required to respond to a collection of information unless it contains a valid OMB control number.

Application Data Sheet 37 CFR 1.76	Attorney Docket Number	13682.225908
	Application Number	
Title of Invention	Configurable Lighting System	

The application data sheet is part of the provisional or nonprovisional application for which it is being submitted. The following form contains the bibliographic data arranged in a format specified by the United States Patent and Trademark Office as outlined in 37 CFR 1.76.
This document may be completed electronically and submitted to the Office in electronic format using the Electronic Filing System (EFS) or the document may be printed and included in a paper filed application.

Secrecy Order 37 CFR 5.2:

☐ Portions or all of the application associated with this Application Data Sheet may fall under a Secrecy Order pursuant to 37 CFR 5.2 (Paper filers only. Applications that fall under Secrecy Order may not be filed electronically.)

Inventor Information:

Inventor 1 Remove

Legal Name

Prefix	Given Name	Middle Name	Family Name	Suffix
	Steven	Walter	Pyshos	

Residence Information (Select One) ● US Residency Non US Residency Active US Military Service

City	Peachtree City	State/Province	GA	Country of Residence i	US

Mailing Address of Inventor:

Address 1	326 Loring Lane
Address 2	
City	Peachtree City
State/Province	GA
Postal Code	30269
Country i	US

Inventor 2 Remove

Legal Name

Prefix	Given Name	Middle Name	Family Name	Suffix
	Raymond		Janik	

Residence Information (Select One) ◉ US Residency Non US Residency Active US Military Service

City	Fayetteville	State/Province	GA	Country of Residence i	US

Mailing Address of Inventor:

Address 1	155 Cheshire Chase
Address 2	
City	Fayetteville
State/Province	GA
Postal Code	30215
Country i	US

Inventor 3 Remove

Legal Name

Prefix	Given Name	Middle Name	Family Name	Suffix
	Kevin	Roy	Harpenau	

Residence Information (Select One) ◉ US Residency Non US Residency Active US Military Service

Menard v. Signify
Menard Exhibit 1022
Page 003

Under the Paperwork Reduction Act of 1995, no persons are required to respond to a collection of information unless it contains a valid OMB control number.

Application Data Sheet 37 CFR 1.76	Attorney Docket Number	13682.225908
	Application Number	
Title of Invention	Configurable Lighting System	

City	Atlanta	State/Province	GA	Country of Residence i	US

Mailing Address of Inventor:

Address 1	701 Highland Ave. NE, Apt. 1511		
Address 2			
City	Atlanta	**State/Province**	GA
Postal Code	30312	**Country** i	US

All Inventors Must Be Listed - Additional Inventor Information blocks may be generated within this form by selecting the **Add** button. Add

Correspondence Information:

Enter either Customer Number or complete the Correspondence Information section below. For further information see 37 CFR 1.33(a).

☐ **An Address is being provided for the correspondence Information of this application.**

Customer Number	91764		
Email Address	jvillegas@kslaw.com	Add Email	Remove Email

Application Information:

Title of the Invention	Configurable Lighting System		
Attorney Docket Number	13682.225908	**Small Entity Status Claimed**	☐
Application Type	Nonprovisional		
Subject Matter	Utility		
Total Number of Drawing Sheets (if any)	10	**Suggested Figure for Publication (if any)**	

Filing By Reference:

Only complete this section when filing an application by reference under 35 U.S.C. 111(c) and 37 CFR 1.57(a). Do not complete this section if application papers including a specification and any drawings are being filed. Any domestic benefit or foreign priority information must be provided in the appropriate section(s) below (i.e., "Domestic Benefit/National Stage Information" and "Foreign Priority Information").

For the purposes of a filing date under 37 CFR 1.53(b), the description and any drawings of the present application are replaced by this reference to the previously filed application, subject to conditions and requirements of 37 CFR 1.57(a).

Application number of the previously filed application	Filing date (YYYY-MM-DD)	Intellectual Property Authority or Country i

Publication Information:

☐ Request Early Publication (Fee required at time of Request 37 CFR 1.219)

☒ **Request Not to Publish.** I hereby request that the attached application not be published under 35 U.S.C. 122(b) and certify that the invention disclosed in the attached application **has not and will not** be the subject of an application filed in another country, or under a multilateral international agreement, that requires publication at eighteen months after filing.

Menard v. Signify
Menard Exhibit 1022
Page 004

Under the Paperwork Reduction Act of 1995, no persons are required to respond to a collection of information unless it contains a valid OMB control number.

Application Data Sheet 37 CFR 1.76	Attorney Docket Number	13682.225908
	Application Number	
Title of Invention	Configurable Lighting System	

Representative Information:

Representative information should be provided for all practitioners having a power of attorney in the application. Providing this information in the Application Data Sheet does not constitute a power of attorney in the application (see 37 CFR 1.32).
Either enter Customer Number or complete the Representative Name section below. If both sections are completed the customer Number will be used for the Representative Information during processing.

Please Select One:	● Customer Number	US Patent Practitioner	◯ Limited Recognition (37 CFR 11.9)
Customer Number	91764		

Domestic Benefit/National Stage Information:

This section allows for the applicant to either claim benefit under 35 U.S.C. 119(e), 120, 121, 365(c), or 386(c) or indicate National Stage entry from a PCT application. Providing benefit claim information in the Application Data Sheet constitutes the specific reference required by 35 U.S.C. 119(e) or 120, and 37 CFR 1.78.
When referring to the current application, please leave the "Application Number" field blank.

Prior Application Status	Pending		Remove
Application Number	Continuity Type	Prior Application Number	Filing or 371(c) Date (YYYY-MM-DD)
	Claims benefit of provisional	62/297424	2016-02-19

Additional Domestic Benefit/National Stage Data may be generated within this form by selecting the **Add** button. Add

Foreign Priority Information:

This section allows for the applicant to claim priority to a foreign application. Providing this information in the application data sheet constitutes the claim for priority as required by 35 U.S.C. 119(b) and 37 CFR 1.55. When priority is claimed to a foreign application that is eligible for retrieval under the priority document exchange program (PDX)[i] the information will be used by the Office to automatically attempt retrieval pursuant to 37 CFR 1.55(i)(1) and (2). Under the PDX program, applicant bears the ultimate responsibility for ensuring that a copy of the foreign application is received by the Office from the participating foreign intellectual property office, or a certified copy of the foreign priority application is filed, within the time period specified in 37 CFR 1.55(g)(1).

Remove

Application Number	Country[i]	Filing Date (YYYY-MM-DD)	Access Code[i] (if applicable)

Additional Foreign Priority Data may be generated within this form by selecting the **Add** button. Add

Application Data Sheet 37 CFR 1.76	Attorney Docket Number	13682.225908
	Application Number	
Title of Invention	Configurable Lighting System	

Statement under 37 CFR 1.55 or 1.78 for AIA (First Inventor to File) Transition Applications

☐ This application (1) claims priority to or the benefit of an application filed before March 16, 2013 and (2) also contains, or contained at any time, a claim to a claimed invention that has an effective filing date on or after March 16, 2013.
NOTE: By providing this statement under 37 CFR 1.55 or 1.78, this application, with a filing date on or after March 16, 2013, will be examined under the first inventor to file provisions of the AIA.

Application Data Sheet 37 CFR 1.76	Attorney Docket Number	13682.225908
	Application Number	
Title of Invention	Configurable Lighting System	

Authorization or Opt-Out of Authorization to Permit Access:

When this Application Data Sheet is properly signed and filed with the application, applicant has provided written authority to permit a participating foreign intellectual property (IP) office access to the instant application-as-filed (see paragraph A in subsection 1 below) and the European Patent Office (EPO) access to any search results from the instant application (see paragraph B in subsection 1 below).

Should applicant choose not to provide an authorization identified in subsection 1 below, applicant **must opt-out** of the authorization by checking the corresponding box A or B or both in subsection 2 below.

NOTE: This section of the Application Data Sheet is **ONLY** reviewed and processed with the **INITIAL** filing of an application. After the initial filing of an application, an Application Data Sheet cannot be used to provide or rescind authorization for access by a foreign IP office(s). Instead, Form PTO/SB/39 or PTO/SB/69 must be used as appropriate.

1. Authorization to Permit Access by a Foreign Intellectual Property Office(s)

A. Priority Document Exchange (PDX) - Unless box A in subsection 2 (opt-out of authorization) is checked, the undersigned hereby **grants the USPTO authority** to provide the European Patent Office (EPO), the Japan Patent Office (JPO), the Korean Intellectual Property Office (KIPO), the State Intellectual Property Office of the People's Republic of China (SIPO), the World Intellectual Property Organization (WIPO), and any other foreign intellectual property office participating with the USPTO in a bilateral or multilateral priority document exchange agreement in which a foreign application claiming priority to the instant patent application is filed, access to: (1) the instant patent application-as-filed and its related bibliographic data, (2) any foreign or domestic application to which priority or benefit is claimed by the instant application and its related bibliographic data, and (3) the date of filing of this Authorization. See 37 CFR 1.14(h)(1).

B. Search Results from U.S. Application to EPO - Unless box B in subsection 2 (opt-out of authorization) is checked, the undersigned hereby **grants the USPTO authority** to provide the EPO access to the bibliographic data and search results from the instant patent application when a European patent application claiming priority to the instant patent application is filed. See 37 CFR 1.14(h)(2).

The applicant is reminded that the EPO's Rule 141(1) EPC (European Patent Convention) requires applicants to submit a copy of search results from the instant application without delay in a European patent application that claims priority to the instant application.

2. Opt-Out of Authorizations to Permit Access by a Foreign Intellectual Property Office(s)

☐ A. Applicant **DOES NOT** authorize the USPTO to permit a participating foreign IP office access to the instant application-as-filed. If this box is checked, the USPTO will not be providing a participating foreign IP office with any documents and information identified in subsection 1A above.

☐ B. Applicant **DOES NOT** authorize the USPTO to transmit to the EPO any search results from the instant patent application. If this box is checked, the USPTO will not be providing the EPO with search results from the instant application.

NOTE: Once the application has published or is otherwise publicly available, the USPTO may provide access to the application in accordance with 37 CFR 1.14.

Application Data Sheet 37 CFR 1.76	Attorney Docket Number	13682.225908
	Application Number	
Title of Invention	Configurable Lighting System	

Applicant Information:

Providing assignment information in this section does not substitute for compliance with any requirement of part 3 of Title 37 of CFR to have an assignment recorded by the Office.

Applicant 1 Remove

If the applicant is the inventor (or the remaining joint inventor or inventors under 37 CFR 1.45), this section should not be completed. The information to be provided in this section is the name and address of the legal representative who is the applicant under 37 CFR 1.43; or the name and address of the assignee, person to whom the inventor is under an obligation to assign the invention, or person who otherwise shows sufficient proprietary interest in the matter who is the applicant under 37 CFR 1.46. If the applicant is an applicant under 37 CFR 1.46 (assignee, person to whom the inventor is obligated to assign, or person who otherwise shows sufficient proprietary interest) together with one or more joint inventors, then the joint inventor or inventors who are also the applicant should be identified in this section.

Clear

● Assignee	Legal Representative under 35 U.S.C. 117	Joint Inventor
Person to whom the inventor is obligated to assign.	Person who shows sufficient proprietary interest	

If applicant is the legal representative, indicate the authority to file the patent application, the inventor is:

Name of the Deceased or Legally Incapacitated Inventor:

If the Applicant is an Organization check here. ☒

Organization Name	Cooper Technologies Company		
Mailing Address Information For Applicant:			
Address 1	600 Travis Street, Suite 5600		
Address 2			
City	Houston	**State/Province**	TX
Country	US	Postal Code	77002
Phone Number		Fax Number	
Email Address			

Additional Applicant Data may be generated within this form by selecting the Add button. Add

Assignee Information including Non-Applicant Assignee Information:

Providing assignment information in this section does not substitute for compliance with any requirement of part 3 of Title 37 of CFR to have an assignment recorded by the Office.

Under the Paperwork Reduction Act of 1995, no persons are required to respond to a collection of information unless it contains a valid OMB control number.

Application Data Sheet 37 CFR 1.76	Attorney Docket Number	13682.225908
	Application Number	
Title of Invention	Configurable Lighting System	

Assignee 1

Complete this section if assignee information, including non-applicant assignee information, is desired to be included on the patent application publication. An assignee-applicant identified in the "Applicant Information" section will appear on the patent application publication as an applicant. For an assignee-applicant, complete this section only if identification as an assignee is also desired on the patent application publication.

Remove

If the Assignee or Non-Applicant Assignee is an Organization check here. ☐

Prefix	**Given Name**	Middle Name	**Family Name**	Suffix

Mailing Address Information For Assignee including Non-Applicant Assignee:

Address 1			
Address 2			
City		**State/Province**	
Country i		Postal Code	
Phone Number		Fax Number	
Email Address			

Additional Assignee or Non-Applicant Assignee Data may be generated within this form by selecting the Add button. Add

Signature:

Remove

NOTE: This Application Data Sheet must be signed in accordance with 37 CFR 1.33(b). **However, if this Application Data Sheet is submitted with the INITIAL filing of the application and either box A or B is not checked in subsection 2 of the "Authorization or Opt-Out of Authorization to Permit Access" section, then this form must also be signed in accordance with 37 CFR 1.14(c).**

This Application Data Sheet **must** be signed by a patent practitioner if one or more of the applicants is a **juristic entity** (e.g., corporation or association). If the applicant is two or more joint inventors, this form must be signed by a patent practitioner, **all** joint inventors who are the applicant, or one or more joint inventor-applicants who have been given power of attorney (e.g., see USPTO Form PTO/AIA/81) on behalf of **all** joint inventor-applicants.

See 37 CFR 1.4(d) for the manner of making signatures and certifications.

Signature	/Robert T. Neufeld/			Date (YYYY-MM-DD)	2017-02-16
First Name	Robert	Last Name	Neufeld	Registration Number	48394

Additional Signature may be generated within this form by selecting the Add button. Add

Application Data Sheet 37 CFR 1.76	Attorney Docket Number	13682.225908
	Application Number	
Title of Invention	Configurable Lighting System	

This collection of information is required by 37 CFR 1.76. The information is required to obtain or retain a benefit by the public which is to file (and by the USPTO to process) an application. Confidentiality is governed by 35 U.S.C. 122 and 37 CFR 1.14. This collection is estimated to take 23 minutes to complete, including gathering, preparing, and submitting the completed application data sheet form to the USPTO. Time will vary depending upon the individual case. Any comments on the amount of time you require to complete this form and/or suggestions for reducing this burden, should be sent to the Chief Information Officer, U.S. Patent and Trademark Office, U.S. Department of Commerce, P.O. Box 1450, Alexandria, VA 22313-1450. DO NOT SEND FEES OR COMPLETED FORMS TO THIS ADDRESS. **SEND TO: Commissioner for Patents, P.O. Box 1450, Alexandria, VA 22313-1450.**

Privacy Act Statement

The Privacy Act of 1974 (P.L. 93-579) requires that you be given certain information in connection with your submission of the attached form related to a patent application or patent. Accordingly, pursuant to the requirements of the Act, please be advised that: (1) the general authority for the collection of this information is 35 U.S.C. 2(b)(2); (2) furnishing of the information solicited is voluntary; and (3) the principal purpose for which the information is used by the U.S. Patent and Trademark Office is to process and/or examine your submission related to a patent application or patent. If you do not furnish the requested information, the U.S. Patent and Trademark Office may not be able to process and/or examine your submission, which may result in termination of proceedings or abandonment of the application or expiration of the patent.

The information provided by you in this form will be subject to the following routine uses:

1 The information on this form will be treated confidentially to the extent allowed under the Freedom of Information Act (5 U.S.C. 552) and the Privacy Act (5 U.S.C. 552a). Records from this system of records may be disclosed to the Department of Justice to determine whether the Freedom of Information Act requires disclosure of these records.

2. A record from this system of records may be disclosed, as a routine use, in the course of presenting evidence to a court, magistrate, or administrative tribunal, including disclosures to opposing counsel in the course of settlement negotiations.

3 A record in this system of records may be disclosed, as a routine use, to a Member of Congress submitting a request involving an individual, to whom the record pertains, when the individual has requested assistance from the Member with respect to the subject matter of the record.

4. A record in this system of records may be disclosed, as a routine use, to a contractor of the Agency having need for the information in order to perform a contract. Recipients of information shall be required to comply with the requirements of the Privacy Act of 1974, as amended, pursuant to 5 U.S.C. 552a(m).

5. A record related to an International Application filed under the Patent Cooperation Treaty in this system of records may be disclosed, as a routine use, to the International Bureau of the World Intellectual Property Organization, pursuant to the Patent CooperationTreaty.

6. A record in this system of records may be disclosed, as a routine use, to another federal agency for purposes of National Security review (35 U.S.C. 181) and for review pursuant to the Atomic Energy Act (42 U.S.C. 218(c)).

7. A record from this system of records may be disclosed, as a routine use, to the Administrator, General Services, or his/her designee, during an inspection of records conducted by GSA as part of that agency's responsibility to recommend improvements in records management practices and programs, under authority of 44 U.S.C. 2904 and 2906. Such disclosure shall be made in accordance with the GSA regulations governing inspection of records for this purpose, and any other relevant (i.e., GSA or Commerce) directive. Such disclosure shall not be used to make determinations about individuals.

8. A record from this system of records may be disclosed, as a routine use, to the public after either publication of the application pursuant to 35 U.S.C. 122(b) or issuance of a patent pursuant to 35 U.S.C. 151. Further, a record may be disclosed, subject to the limitations of 37 CFR 1.14, as a routine use, to the public if the record was filed in an application which became abandoned or in which the proceedings were terminated and which application is referenced by either a published application, an application open to public inspections or an issued patent.

9. A record from this system of records may be disclosed, as a routine use, to a Federal, State, or local law enforcement agency, if the USPTO becomes aware of a violation or potential violation of law or regulation.

Menard v. Signify
Menard Exhibit 1022
Page 011

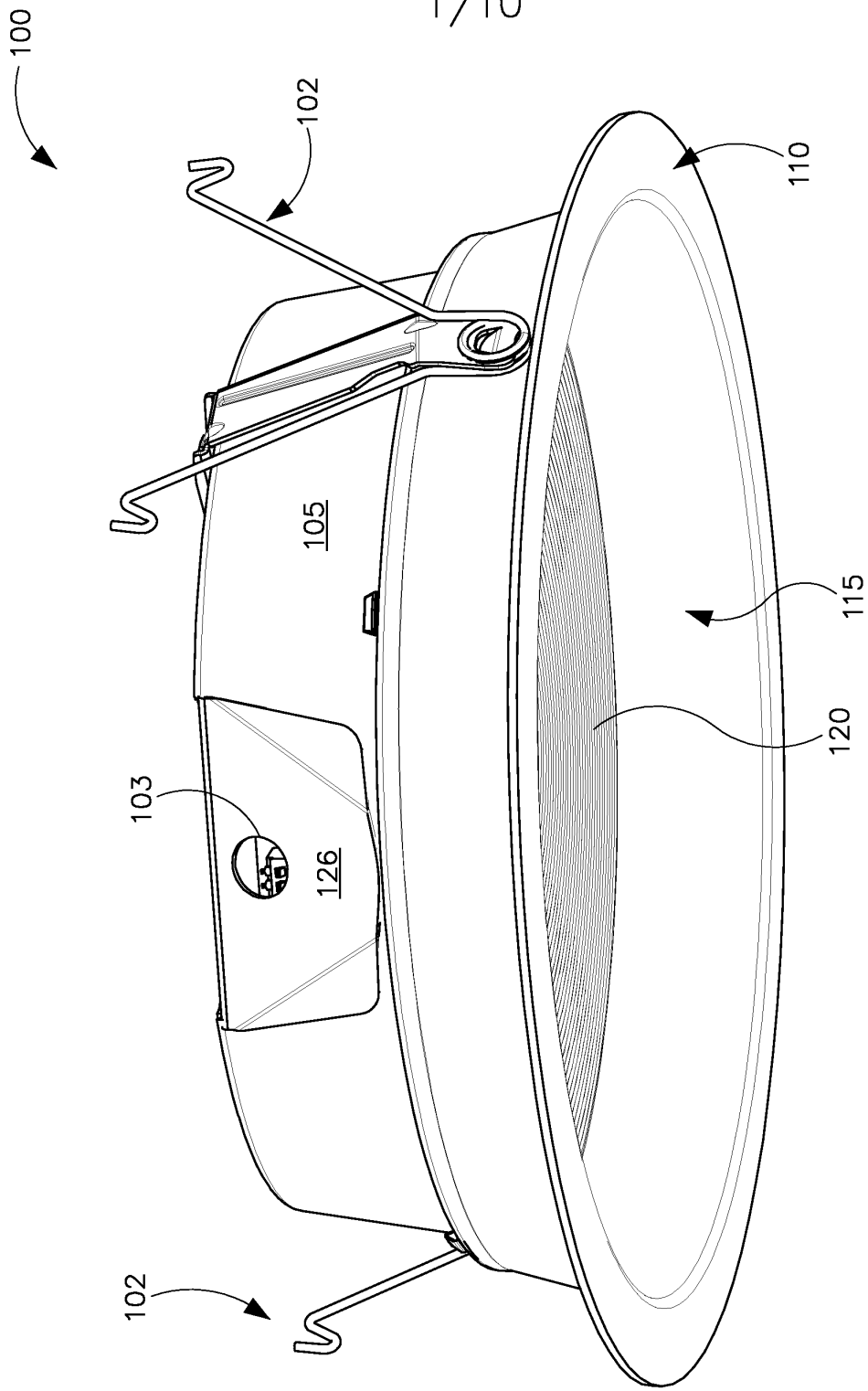

FIG. 1A

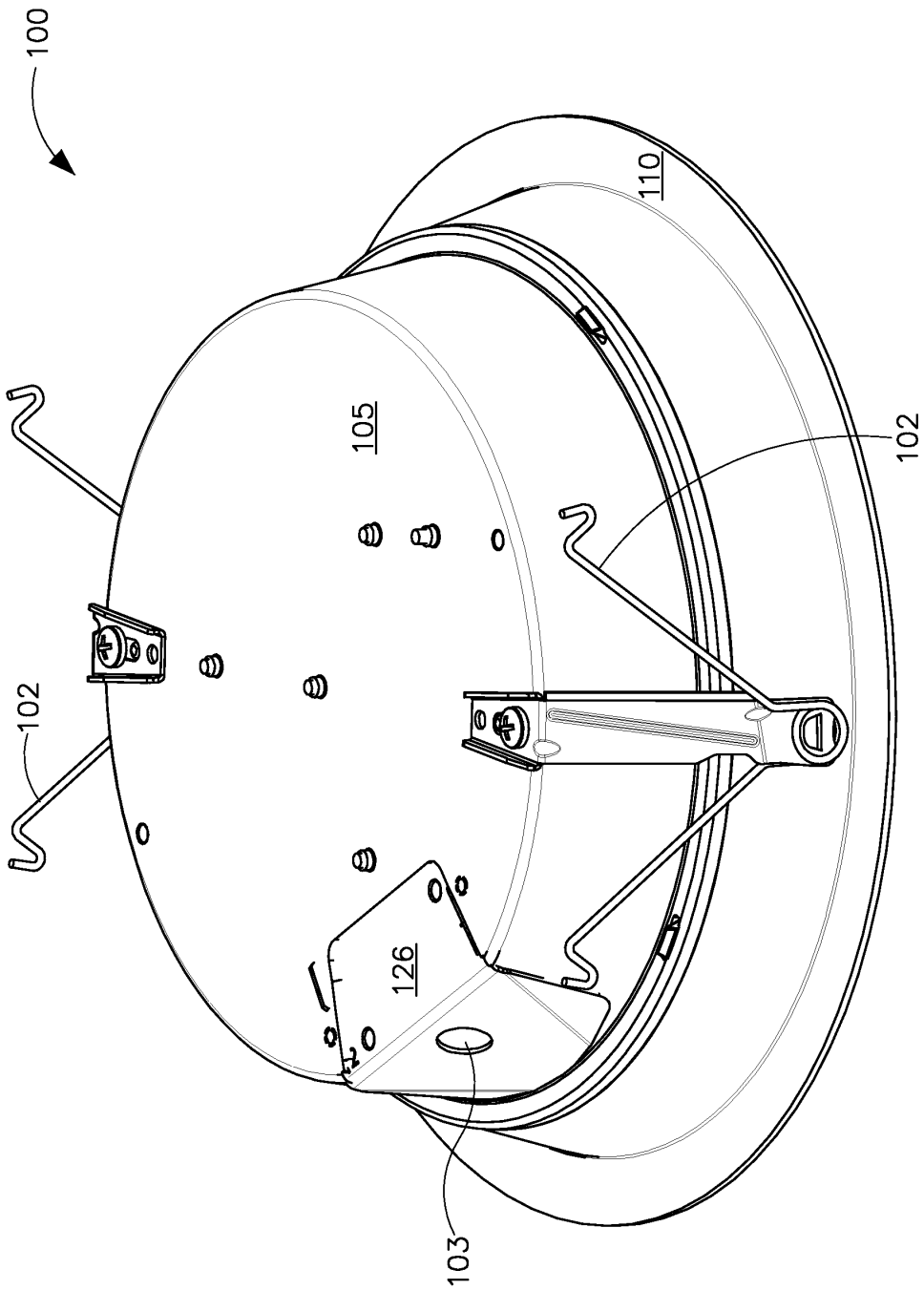

FIG. 1B

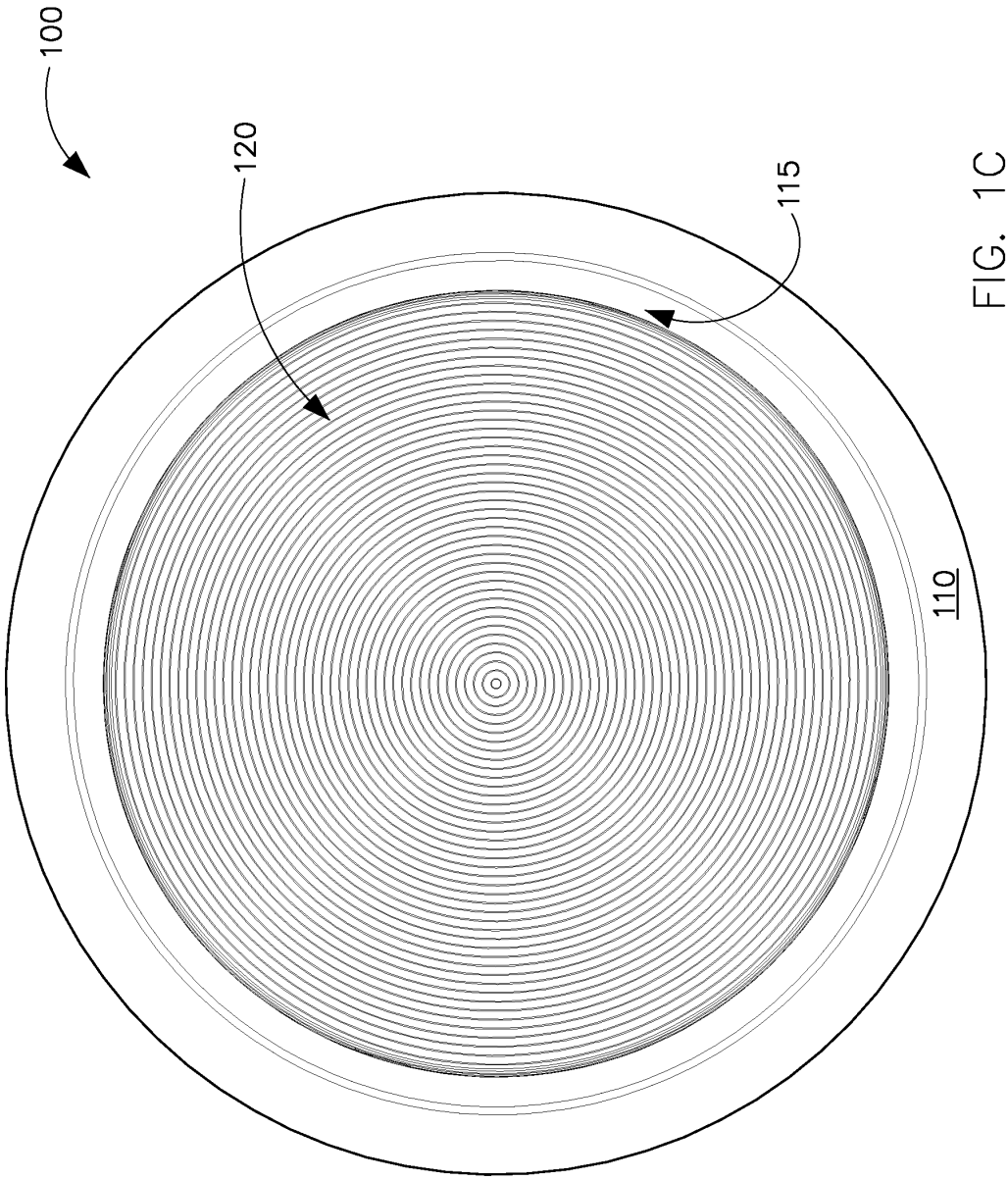

FIG. 1C

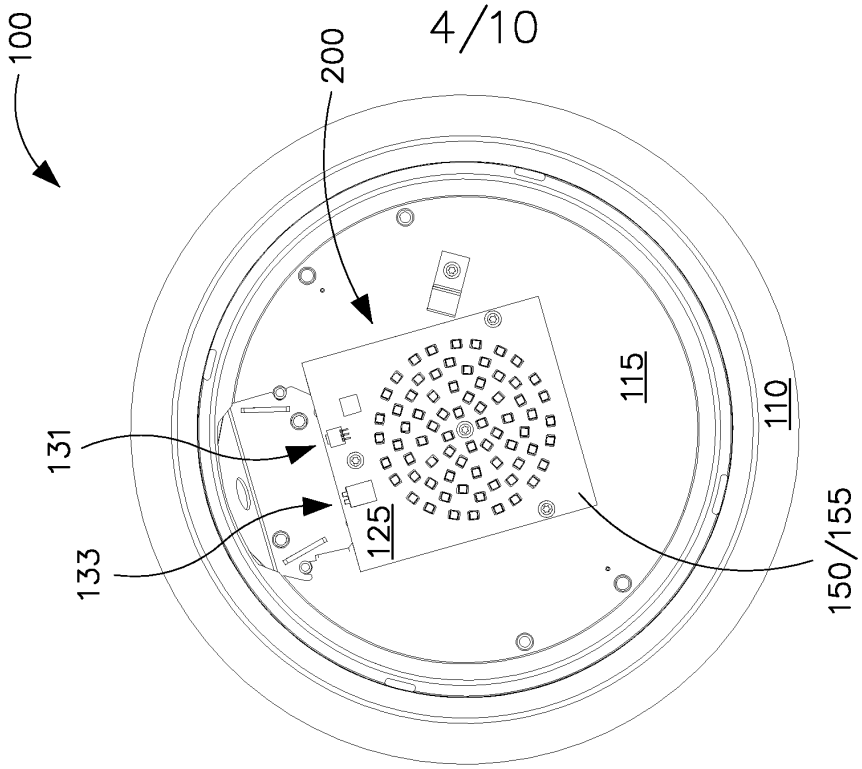

FIG. 1E

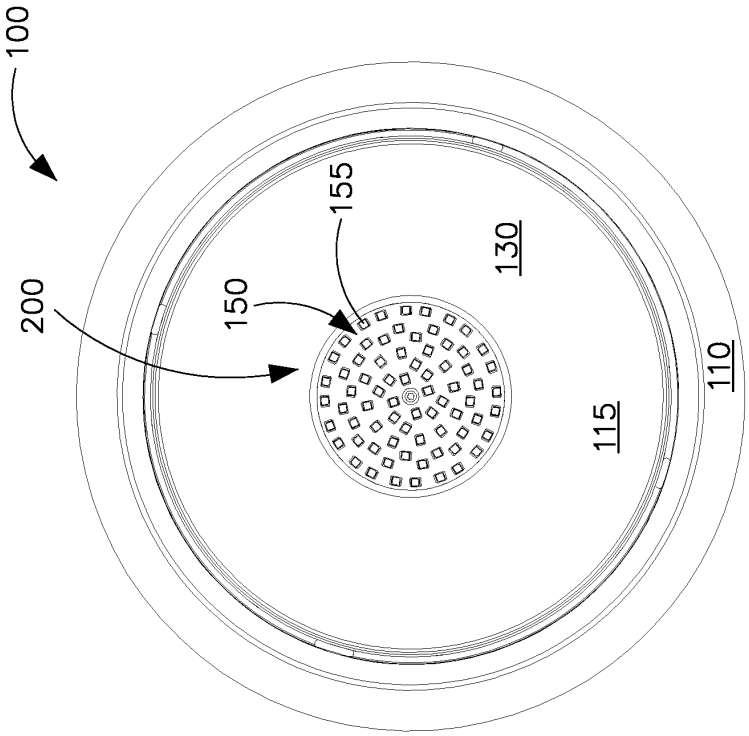

FIG. 1D

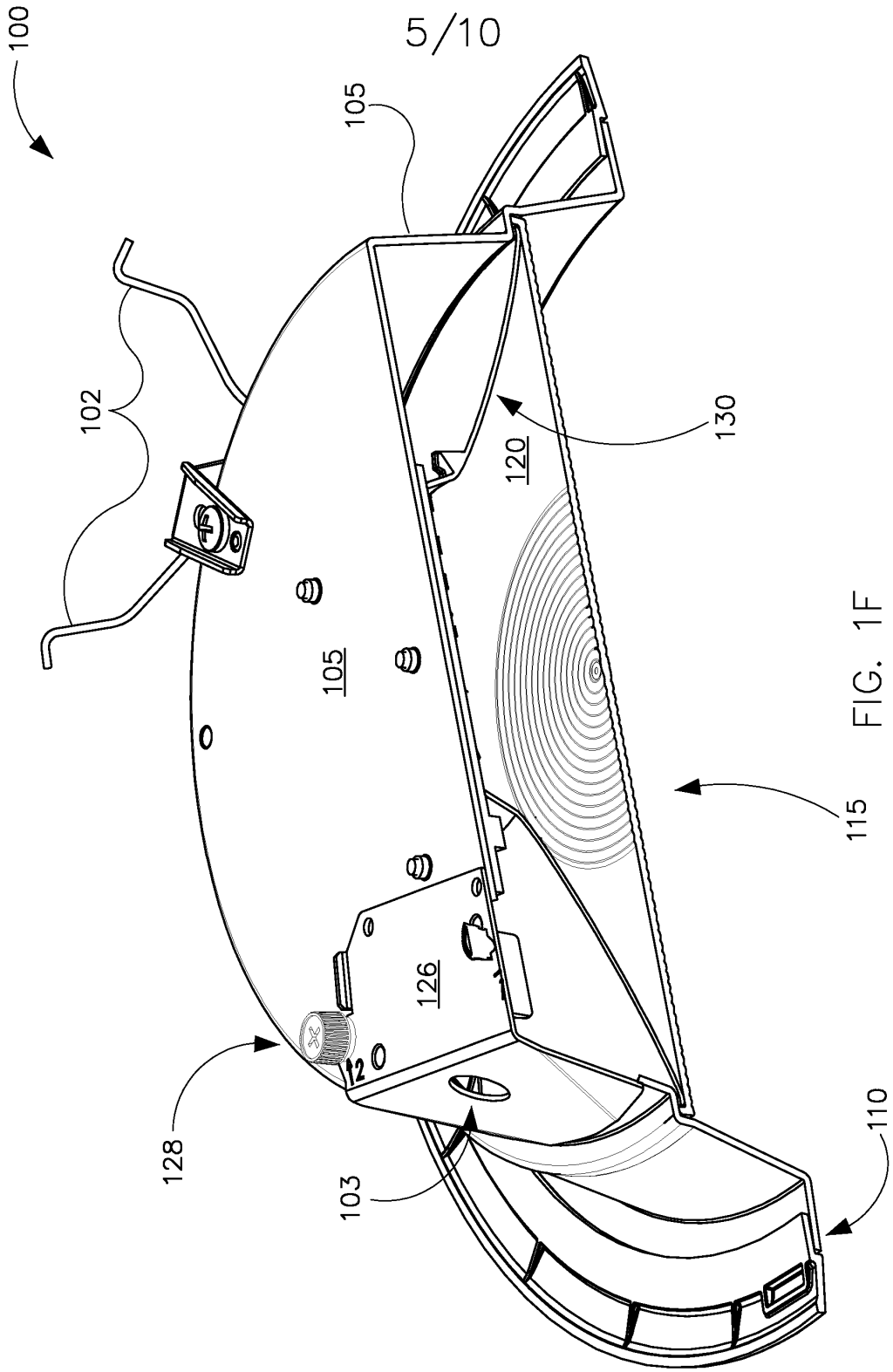

FIG. 1F

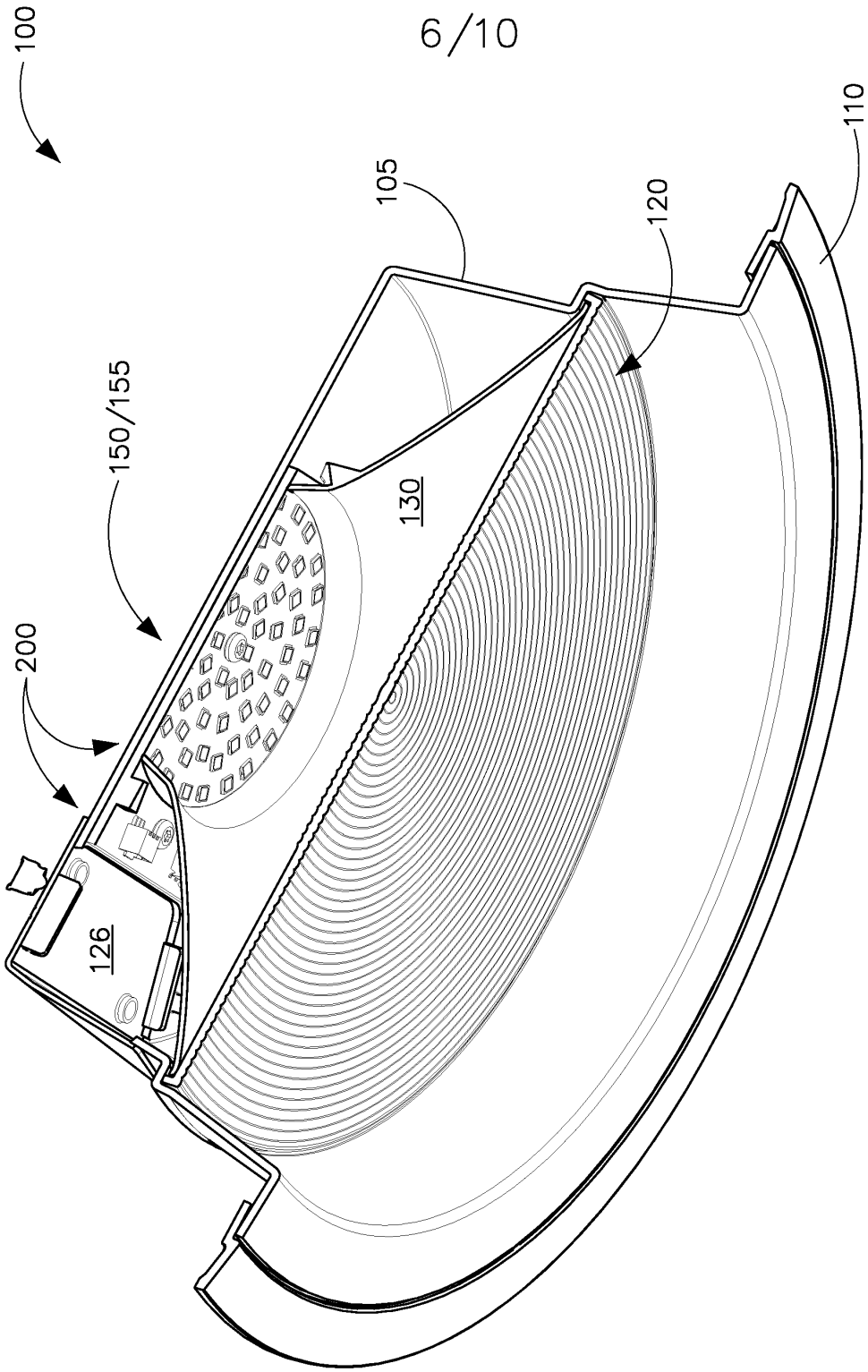

FIG. 1G

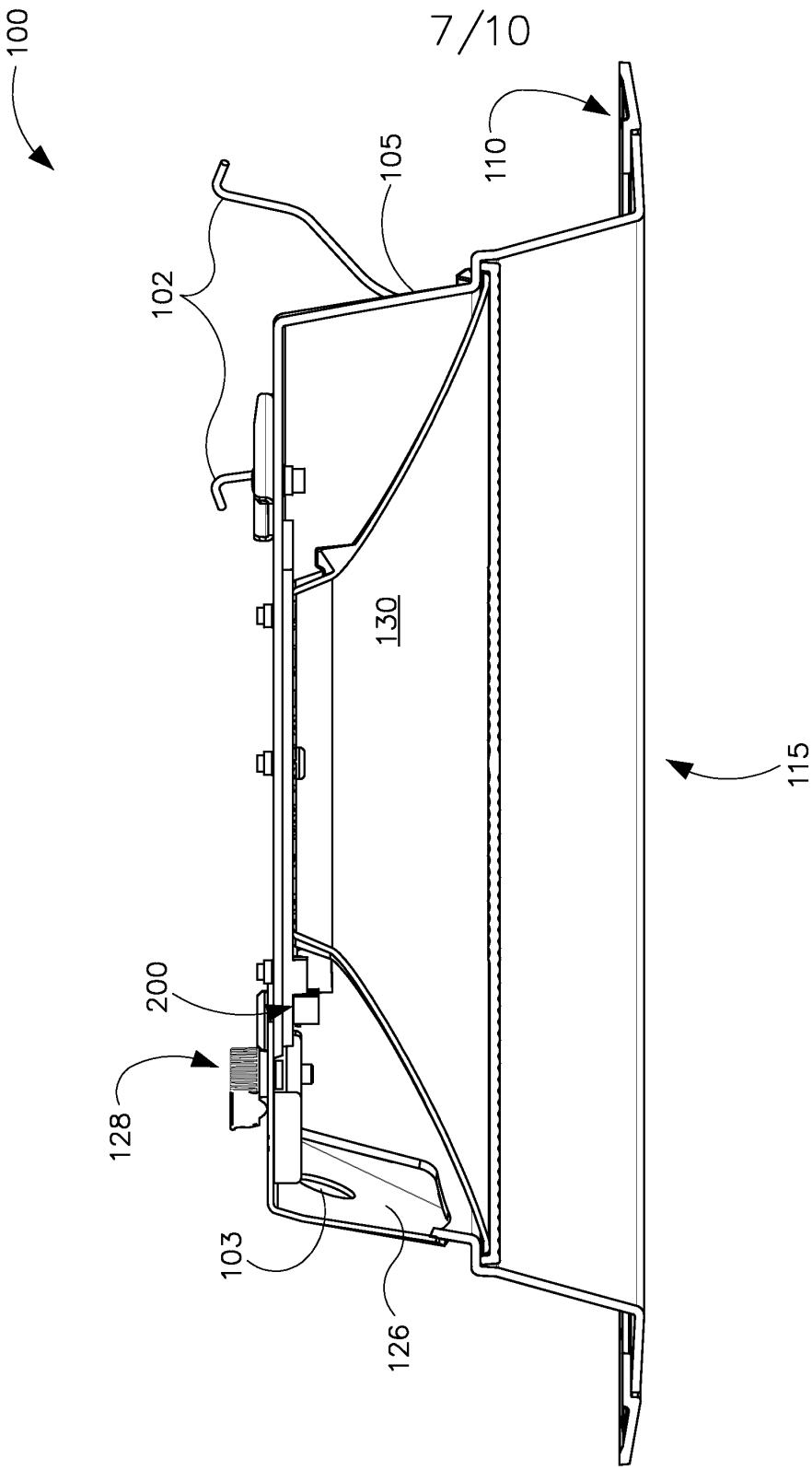

FIG. 1H

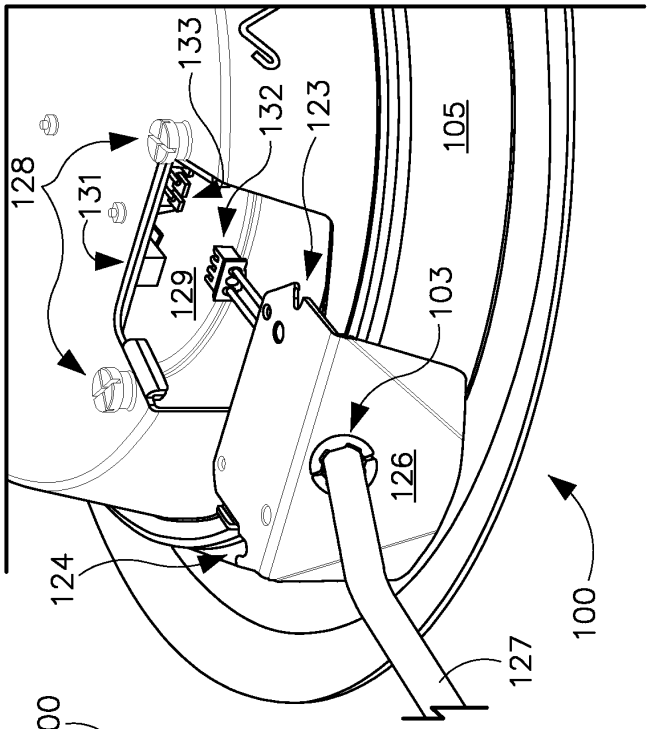

FIG. 1J

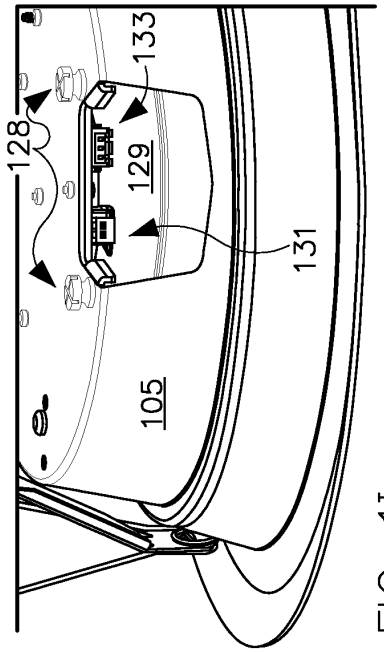

FIG. 1I

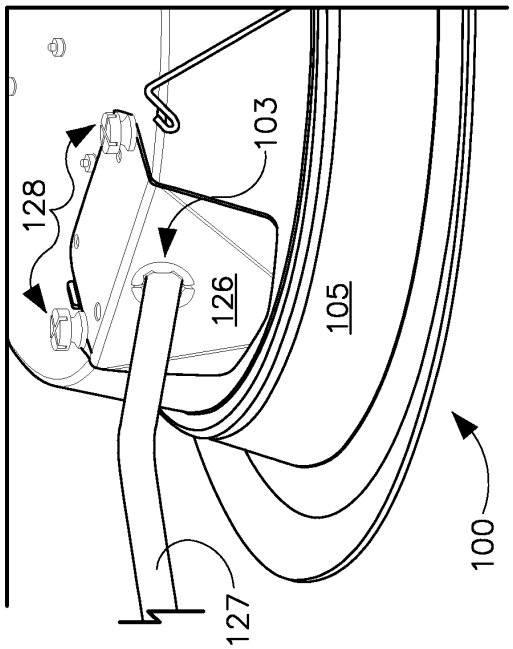

FIG. 1K

FIG. 2

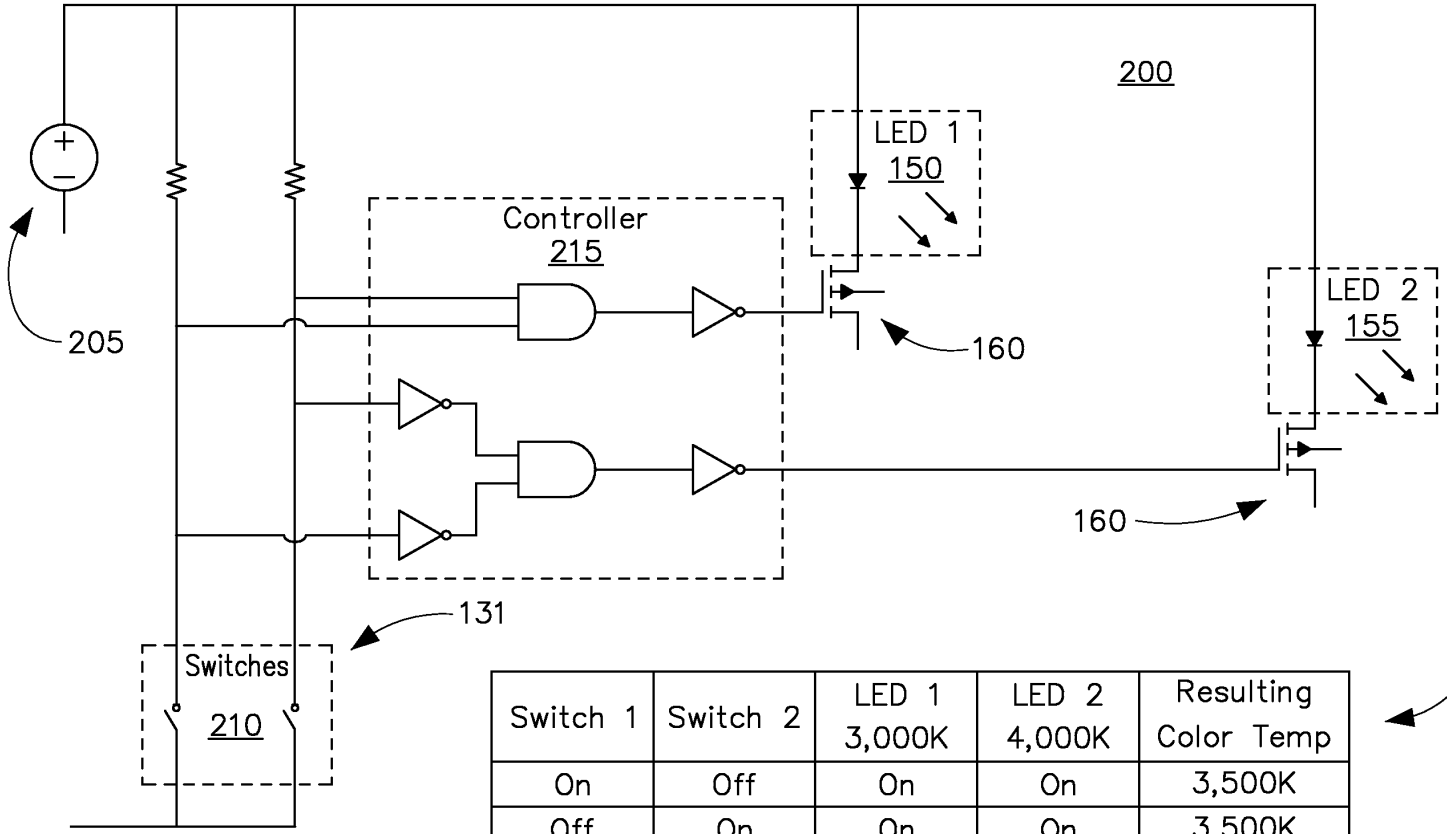

300

Switch 1	Switch 2	LED 1 3,000K	LED 2 4,000K	Resulting Color Temp
On	Off	On	On	3,500K
Off	On	On	On	3,500K
On	On	On	Off	3,000K
Off	Off	Off	On	4,000K

FIG. 3

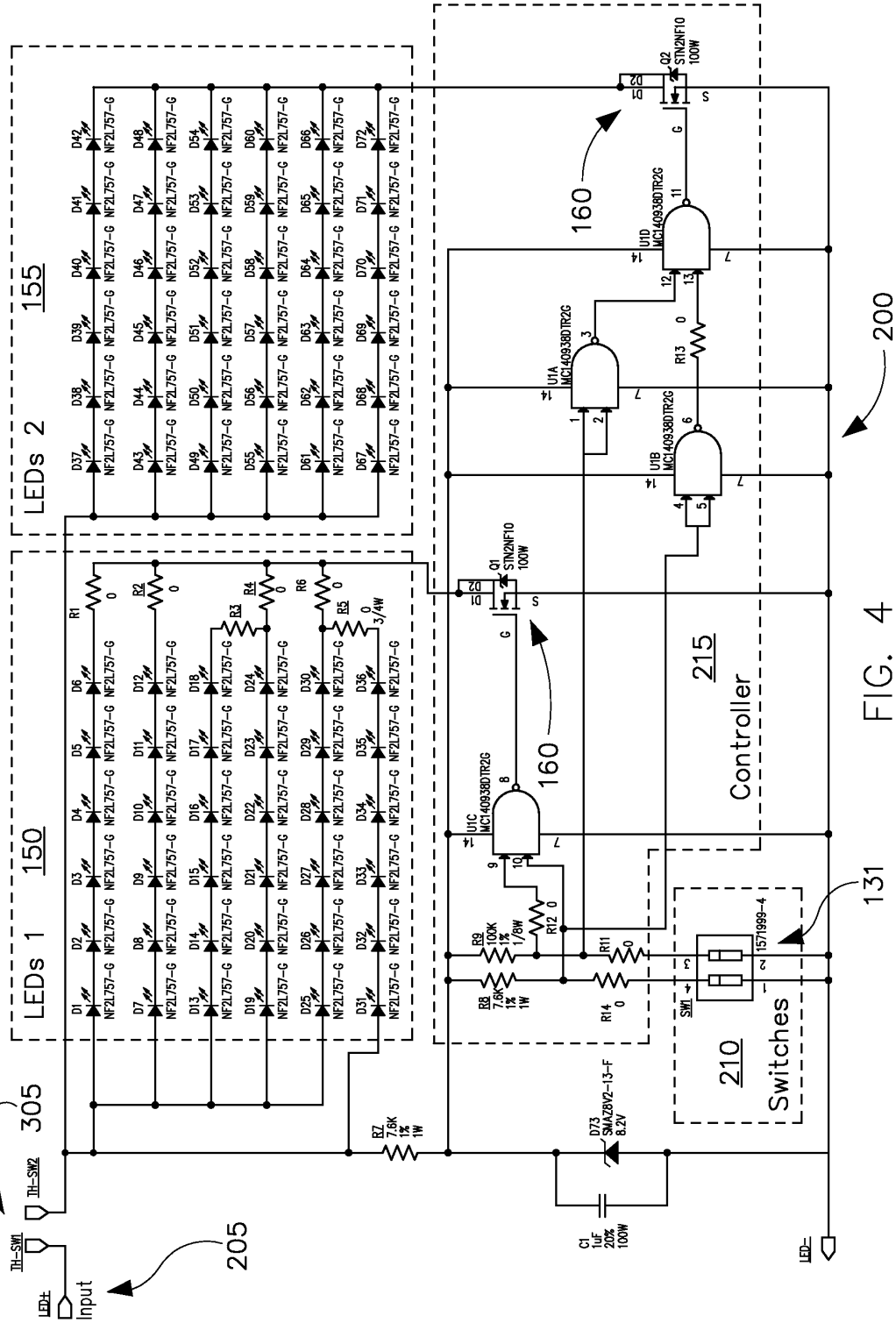
LEDs 1
150
LEDs 2
155
Controller
215
Switches
210
160
160
200
131
305
205
Input
TH-SW1
TH-SW2
LED+
LED-
Q1 STN2NF10 100W
Q2 STN2NF10 100W
U1A MC14093BDTR2G
U1B MC14093BDTR2G
U1C MC14093BDTR2G
U1D MC14093BDTR2G
R1 0
R2 0
R3 0
R4 0
R5 0 3/4W
R6 0
R7 7.6K 1% 1W
R8 7.6K 1% 1W
R9 100K 1% 1/8W
R11 0
R12 0
R13 0
R14 0
D73 SMAZ8V2-13-F 8.2V
C1 1uF 20% 100W
SW1 1571999-4

FIG. 4

DECLARATION AND POWER OF ATTORNEY

In re Application of: **Steven Walter Pyshos, Raymond Janik, and Kevin Roy Harpenau**

As a below named inventor, I hereby declare that this declaration is directed to the attached specification titled **"CONFIGURABLE LIGHTING SYSTEM"** to be filed with the U.S. Patent and Trademark Office.

The above-identified application was made or authorized to be made by me. I believe that I am the original inventor or an original joint inventor of a claimed invention in the application.

I hereby state that I have reviewed and understand the contents of the above-identified specification, including the claims, as amended by any amendment referred to above.

I understand that I have a duty of candor and good faith toward the Patent and Trademark Office, and I acknowledge the duty to disclose information which is material to the patentability of the claimed invention of the application in accordance with Title 37, Code of Federal Regulations, § 1.56.

AUTHORIZATION TO PERMIT ACCESS TO APPLICATION BY PARTICIPATING OFFICES

☒ If checked, the undersigned hereby grants the USPTO authority to provide the European Patent Office (EPO), the Japan Patent Office (JPO), and any other intellectual property offices in which a foreign application claiming priority to the above-identified application is filed access to the above-identified patent application. See 37 CFR 1.14(c) and (h). This box should not be checked if the applicant does not wish the EPO, JPO, or other intellectual property office in which a foreign application claiming priority to the above-identified application is filed to have access to the application.
In accordance with 37 CFR 1.14(h)(3), access will be provided to a copy of the application-as-filed with respect to: 1) the above-identified application, 2) any foreign application to which the above-identified application claims priority under 35 USC 119(a)-(d) if a copy of the foreign application that satisfies the certified copy requirement of 37 CFR 1.55 has been filed in the above-identified US application, and 3) any U.S. application from which benefit is sought in the above-identified application.
In accordance with 37 CFR 1.14(c), access may be provided to information concerning the date of filing the Authorization to Permit Access to Application by Participating Offices.

I hereby acknowledge that any willful false statement made in this declaration is punishable under 18 U.S.C. 1001 by fine or imprisonment of not more than five (5) years, or both.

POWER OF ATTORNEY: I hereby appoint the practitioners associated with **Customer Number 91764** to prosecute this application and to transact all business in the Patent and Trademark Office connected therewith.

Send correspondence to: **Customer Number 91764** Direct telephone calls to **(404) 572-4600**

Robert T. Neufeld, Esq.

Full name of joint inventor: **Steven Walter Pyshos**	
Inventor's signature Steven Walter Pyshos	Date: 2/1/17
Residence and Post Office Address: **326 Loring Lane, Peachtree City, Georgia 30269**	

DECLARATION AND POWER OF ATTORNEY

In re Application of: **Steven Walter Pyshos, Raymond Janik, and Kevin Roy Harpenau**

As a below named inventor, I hereby declare that this declaration is directed to the attached specification titled **"CONFIGURABLE LIGHTING SYSTEM"** to be filed with the U.S. Patent and Trademark Office.

The above-identified application was made or authorized to be made by me. I believe that I am the original inventor or an original joint inventor of a claimed invention in the application.

I hereby state that I have reviewed and understand the contents of the above-identified specification, including the claims, as amended by any amendment referred to above.

I understand that I have a duty of candor and good faith toward the Patent and Trademark Office, and I acknowledge the duty to disclose information which is material to the patentability of the claimed invention of the application in accordance with Title 37, Code of Federal Regulations, § 1.56.

AUTHORIZATION TO PERMIT ACCESS TO APPLICATION BY PARTICIPATING OFFICES

☒ If checked, the undersigned hereby grants the USPTO authority to provide the European Patent Office (EPO), the Japan Patent Office (JPO), and any other intellectual property offices in which a foreign application claiming priority to the above-identified application is filed access to the above-identified patent application. See 37 CFR 1.14(c) and (h). This box should not be checked if the applicant does not wish the EPO, JPO, or other intellectual property office in which a foreign application claiming priority to the above-identified application is filed to have access to the application.
In accordance with 37 CFR 1.14(h)(3), access will be provided to a copy of the application-as-filed with respect to: 1) the above-identified application, 2) any foreign application to which the above-identified application claims priority under 35 USC 119(a)-(d) if a copy of the foreign application that satisfies the certified copy requirement of 37 CFR 1.55 has been filed in the above-identified US application, and 3) any U.S. application from which benefit is sought in the above-identified application.
In accordance with 37 CFR 1.14(c), access may be provided to information concerning the date of filing the Authorization to Permit Access to Application by Participating Offices.

I hereby acknowledge that any willful false statement made in this declaration is punishable under 18 U.S.C. 1001 by fine or imprisonment of not more than five (5) years, or both.

POWER OF ATTORNEY: I hereby appoint the practitioners associated with **Customer Number 91764** to prosecute this application and to transact all business in the Patent and Trademark Office connected therewith.

Send correspondence to: **Customer Number 91764** Direct telephone calls to **(404) 572-4600**

Robert T. Neufeld, Esq.

Full name of joint inventor: **Raymond Janik**	
Inventor's signature	Date: 2-1-2017
Residence and Post Office Address: **155 Cheshire Chase, Fayetteville, Georgia 30215**	

DECLARATION AND POWER OF ATTORNEY

In re Application of: **Steven Walter Pyshos, Raymond Janik, and Kevin Roy Harpenau**

As a below named inventor, I hereby declare that this declaration is directed to the attached specification titled "**CONFIGURABLE LIGHTING SYSTEM**" to be filed with the U.S. Patent and Trademark Office.

The above-identified application was made or authorized to be made by me. I believe that I am the original inventor or an original joint inventor of a claimed invention in the application.

I hereby state that I have reviewed and understand the contents of the above-identified specification, including the claims, as amended by any amendment referred to above.

I understand that I have a duty of candor and good faith toward the Patent and Trademark Office, and I acknowledge the duty to disclose information which is material to the patentability of the claimed invention of the application in accordance with Title 37, Code of Federal Regulations, § 1.56.

AUTHORIZATION TO PERMIT ACCESS TO APPLICATION BY PARTICIPATING OFFICES

☒ If checked, the undersigned hereby grants the USPTO authority to provide the European Patent Office (EPO), the Japan Patent Office (JPO), and any other intellectual property offices in which a foreign application claiming priority to the above-identified application is filed access to the above-identified patent application. See 37 CFR 1.14(c) and (h). This box should not be checked if the applicant does not wish the EPO, JPO, or other intellectual property office in which a foreign application claiming priority to the above-identified application is filed to have access to the application.
In accordance with 37 CFR 1.14(h)(3), access will be provided to a copy of the application-as-filed with respect to: 1) the above-identified application, 2) any foreign application to which the above-identified application claims priority under 35 USC 119(a)-(d) if a copy of the foreign application that satisfies the certified copy requirement of 37 CFR 1.55 has been filed in the above-identified US application, and 3) any U.S. application from which benefit is sought in the above-identified application.
In accordance with 37 CFR 1.14(c), access may be provided to information concerning the date of filing the Authorization to Permit Access to Application by Participating Offices.

I hereby acknowledge that any willful false statement made in this declaration is punishable under 18 U.S.C. 1001 by fine or imprisonment of not more than five (5) years, or both.

POWER OF ATTORNEY: I hereby appoint the practitioners associated with **Customer Number 91764** to prosecute this application and to transact all business in the Patent and Trademark Office connected therewith.

Send correspondence to: **Customer Number 91764** Direct telephone calls to **(404) 572-4600**

Robert T. Neufeld, Esq.

Full name of joint inventor: **Kevin Roy Harpenau**	
Inventor's signature	Date: 2/1/2017
Residence and Post Office Address: **701 Highland Ave. NE, Apt. 1511, Atlanta, Georgia 30312**	

DMSLIBRARY01\29848778.v1

CONFIGURABLE LIGHTING SYSTEM

CROSS REFERENCE TO RELATED APPLICATIONS

This application claims priority to U.S. Provisional Patent Application Number 62/297,424 filed February 19, 2016 in the name of Steven Walter Pyshos and Raymond Janik and entitled "Configurable Lighting System," the entire contents of which are hereby incorporated herein by reference.

TECHNICAL FIELD

Embodiments of the technology relate generally to lighting systems and more specifically to lighting systems that can be readily configured to produce illumination of different color temperatures.

BACKGROUND

For illumination applications, light emitting diodes (LEDs) offer substantial potential benefit associated with their energy efficiency, light quality, and compact size. However, to realize the full potential benefits offered by light emitting diodes, new technologies are needed.

With luminaires that incorporate incandescent or fluorescent technology, some flexibility can be obtained by swapping lamps to meet user preferences. In such luminaires, lamp selection can provide flexibility in terms of correlated color temperature (CCT or color temperature) and light output (lumen output). For example, a compact fluorescent downlight might accept 6-, 32-, and 42-watt lamps in 2700, 3000, and 3500 degrees K CCT. Additionally, changing lamp position and focal point in a reflector of an incandescent or fluorescent fixture can change the fixture spacing criteria (SC) of a luminaire.

In contrast, conventional light-emitting-diode-based luminaires typically offer reduced flexibility when the luminaire's light-emitting-diode-based light source is permanently attached to the luminaire. Stocking conventional light-emitting-diode-based luminaires at distribution to accommodate multiple configurations that users may desire can entail maintaining a relatively large or cumbersome inventory.

Need is apparent for a technology to provide a light emitting diode system that can adapt to various applications, for example by delivering multiple color temperatures, multiple lumens, and/or multiple photometric distributions. Need further exists for a capability to enable a single luminaire to be stocked at distribution and then quickly configured according to application parameters and deployment dictates. Need further exits for luminaires that are both energy efficient and flexible. A capability addressing one or more such needs, or some other related deficiency in the art, would support improved illumination systems and more widespread utilization of light emitting diodes in lighting applications.

SUMMARY

In some aspects of the disclosure, a system can configure a luminaire for providing illumination of a selected color temperature, a selected lumen output, or a selected photometric distribution based on an input. The input may be field selectable or may be selectable at a distribution center or at a late stage of luminaire manufacture, for example.

In some aspects of the disclosure, the luminaire can comprise at least two light sources having different color temperatures. In a first configuration, the luminaire can produce illumination of a first color temperature using a first one of the light sources. In a second configuration, the luminaire can produce illumination of a second color temperature using a second one of the light sources. In a third configuration, the luminaire can produce illumination of a third color temperature using both of the first and second the light sources. The third color temperature may be between the first and second color temperatures. The value of the third color temperature within a range between the first and second color temperatures can be controlled by manipulating the

Menard v. Signify
Menard Exhibit 1022
Page 026

relative amounts of light output by the first and second light sources. That is, adjusting the lumen outputs of the first and second light sources can define the color temperature of the illumination produced by the luminaire in the third configuration.

In some aspects of the disclosure, the luminaire can comprise at least two light sources having different lumen outputs. In a first configuration, the luminaire can produce illumination of a first lumen output using a first one of the light sources. In a second configuration, the luminaire can produce illumination of a second lumen output using a second one of the light sources. In a third configuration, the luminaire can produce illumination of a third lumen output using both of the first and second light sources.

In some aspects of the disclosure, the luminaire can comprise at least two light sources having different photometric distributions. In a first configuration, the luminaire can produce illumination of a first photometric distribution using a first one of the light sources. In a second configuration, the luminaire can produce illumination of a second photometric distribution using a second one of the light sources. In a third configuration, the luminaire can produce illumination of a third photometric distribution using both of the first and second light sources.

In some aspects of the disclosure, a circuit and an associated input to the circuit can configure a luminaire for providing illumination having a selected property, for example a selected color temperature, a selected lumen output, or a selected photometric distribution. The input can be settable to a first number of states. The circuit can map the first number of states into a second number of states that is less than the first number of states. For example, the input can have four states and the circuit can map these four states into three states. The three states can correspond to three different values of the illumination property, for example three different color temperatures, three different lumen outputs, or three different photometric distributions.

The foregoing discussion of controlling illumination is for illustrative purposes only. Various aspects of the present disclosure may be more clearly understood and appreciated from a review of the following text and by reference to the associated drawings and the claims that follow. Other aspects, systems, methods, features,

Menard v. Signify
Menard Exhibit 1022
Page 027

advantages, and objects of the present disclosure will become apparent to one with skill in the art upon examination of the following drawings and text. It is intended that all such aspects, systems, methods, features, advantages, and objects are to be included within this description and covered by this application and by the appended claims of the application.

BRIEF DESCRIPTION OF THE DRAWINGS

Figures 1A, 1B, 1C, 1D, 1E, 1F, 1G, 1H, 1I, 1J, and 1K (collectively Figure 1) illustrate views of a luminaire in accordance with some example embodiments of the disclosure.

Figure 2 illustrates a functional block diagram of a circuit that a luminaire can comprise in accordance with some example embodiments of the disclosure.

Figure 3 illustrates a state table for a circuit that a luminaire can comprise in accordance with some example embodiments of the disclosure.

Figure 4 illustrates a schematic of a circuit that a luminaire can comprise in accordance with some example embodiments of the disclosure.

Many aspects of the disclosure can be better understood with reference to the above drawings. The drawings illustrate only example embodiments and are therefore not to be considered limiting of the embodiments described, as other equally effective embodiments are within the scope and spirit of this disclosure. The elements and features shown in the drawings are not necessarily drawn to scale, emphasis instead being placed upon clearly illustrating principles of the embodiments. Additionally, certain dimensions or positionings may be exaggerated to help visually convey certain principles. In the drawings, similar reference numerals among different figures designate like or corresponding, but not necessarily identical, elements.

Menard v. Signify
Menard Exhibit 1022
Page 028

DESCRIPTION OF EXAMPLE EMBODIMENTS

In some example embodiments of the disclosure, a luminaire can comprise multiple groups of light emitting diodes of different color temperatures and a constant current power supply for powering the light emitting diodes. The power supply can utilize a switching scheme that can turn each group of light emitting diodes on and off to change the color temperature of the luminaire. In some example embodiments, the power supply can further vary the relative intensities of the light emitting diodes to manipulate the color temperature of the luminaire within a range.

For example, the luminaire can comprise a 3,000 degrees K group of light emitting diodes and a 4,000 degrees K group of light emitting diodes. When only the 3,000 degrees K group is on, the luminaire can deliver 3,000 degrees K illumination. When only the 4,000 degrees K group is on, the luminaire can deliver 4,000 degrees K illumination. When the 3,000 degrees K group and the 4,000 degrees K group are both on, the luminaire can deliver 3,500 degrees K illumination. If the 4,000 degree K group of light emitting diodes is concurrently operated at a low lumen output and the 3,000 degree K group is operated at a high lumen output, the luminaire may deliver illumination of another selected color temperature, for example 3,100 degrees K.

In some example embodiments, a controller can adjust lumen output automatically to maintain constant delivered lumens across multiple color temperatures or to suite application requirements. The controller implement the adjustment utilizing programmable driver current and/or via turning on and off various groups of light emitting diodes. Configurable color temperature or lumen output can function in combination with integral dimming, for example to facilitate interface with building automation, sensors, and dimmers.

In some example embodiments, luminaires can achieve an additional level of flexible configuration at a distribution center using interchangeable optics. For example, primary optics can provide medium distribution (e.g. spacing criteria equals 1.0), while a diffuser or concentrator lens can be used to achieve wide distribution (e.g. spacing criteria equals 1.4), and narrow distribution (e.g. spacing criteria equals 0.4).

Menard v. Signify
Menard Exhibit 1022
Page 029

In some example embodiments, a luminaire's configuration of delivered lumens and color temperatures can be set at the factory, at distribution, or in the field. To meet current and emerging code compliance, performance markings on a luminaire can indicate and correspond to the desired setting. Economical, field-installed nameplates can identify the various electrical and optical performance ratings and, when installed, permanently program the delivered lumens and color temperature. Other settings, such as dimming protocols, can likewise be configured. The interface between the nameplate and internal logic can use mechanical, electrical or optical means, for example.

Accordingly, in some embodiments of the disclosure, the technology provides product markings and supports regulatory compliance. For example, nameplates can indicate energy codes and rebate opportunities, for compliance with product labeling and to facilitate compliance confirmation by local authorities who may have jurisdiction.

Some representative embodiments will be further described hereinafter with example reference to the accompanying drawings that describe representative embodiments of the present technology. In the drawings, Figure 1 illustrates views of a representative luminaire 100; Figure 2 illustrates a functional block diagram of a representative circuit 200 that the luminaire 100 can comprise; Figure 3 illustrates a representative state table for the circuit 200; and Figure 4 illustrates a representative schematic for the circuit 200. The technology may, however, be embodied in many different forms and should not be construed as limited to the embodiments set forth herein; rather, these embodiments are provided so that this disclosure will be thorough and complete, and will fully convey the scope of the technology to those appropriately skilled in the art.

Referring now to Figure 1, multiple views of the luminaire 100 are shown. Figure 1A illustrates a side perspective view of the luminaire 100. Figure 1B illustrates a top perspective view of the luminaire 100. Figure 1C illustrates a view of the light-emitting bottom of the luminaire 100, showing a lens 120 in a light-emitting aperture 115 of the luminaire 100. Figure 1D illustrates a view of the light-emitting bottom of the luminaire 100 with the lens 120 removed from the light-emitting aperture 115 of the luminaire. Figure 1E illustrates a view of the light-emitting bottom of the luminaire 100 with the

Menard v. Signify
Menard Exhibit 1022
Page 030

lens 120 and an associated reflector 130 removed from the light-emitting aperture 115 of the luminaire. Figure 1F illustrates a cutaway perspective view of the luminaire 100. Figure 1G illustrates another cutaway perspective view of the luminaire 100. Figure 1H illustrates another cutaway view of the luminaire 100. Figures 1I, 1J, and 1K provide detailed views of a portion of the luminaire 100 comprising a cover 126 and an associated access aperture 129 for providing internal access to the luminaire 100. In Figure 1I, the cover 126 is fully removed. In Figure 1J, the cover 126 is positioned adjacent the access aperture 129, for example in connection with attachment or removal of the cover 126. In Figure 1K, the cover 126 is attached to the luminaire 100.

As best seen in the views of Figures 1A and 1B, the illustrated example luminaire 100 is suited for inserting in an aperture in a ceiling to provide overhead lighting. In this example embodiment, the luminaire 100 can be characterized as an overhead light or a recessed ceiling light. Various other indoor and outdoor luminaires that may be mounted in a wide range of orientations can be substituted for the luminaire 100 illustrated in Figure 1.

The illustrated example luminaire 100 of Figure 1 comprises a housing 105 that is circular with a protruding rim 100 that extends circumferentially about the housing 105. When the luminaire 100 is installed in a ceiling aperture, the rim 100 circumscribes and covers the edge of the ceiling aperture for aesthetics, for support, and for blocking of debris from above the ceiling. Hanger clips 102 hold the luminaire 100 in place in installation.

As best illustrated in Figures 1I, 1J, and 1K, the example luminaire 100 comprises an access aperture 129 and an associated cover 126. The access aperture 129 provides access to the interior of the luminaire housing 105, for example in the field and/or during luminaire installation. An installer can remove the cover 126 and manually set a dual inline pin (DIP) switch 131 to configure the luminaire 100 for long-term operation providing illumination with a selected color temperature, a selected lumen output, and/or a selected photometric distribution. As illustrated, the dual inline pin switch 131 is mounted on a circuit board adjacent the access aperture 129, thereby facilitating convenient and efficient access in the field or at a distribution center, for example.

Menard v. Signify
Menard Exhibit 1022
Page 031

An electrical cable 127 extends through a wiring aperture 103 in the cover 126. The electrical cable 127 terminates in a plug 132 that mates with a receptacle 133 that is mounted inside the housing 105 adjacent the access aperture 129 for convenient field access.

As illustrated, the example cover 126 comprises two notches 123, 124 that each receives a respective screw 128 for holding the cover 126 in place. The notch 123 is disposed on the right side of the cover 126 and is sized to receive one of the screws 128. Meanwhile, the notch 124 is disposed on a left side of the cover 126 and is sized to receive the other screw 128.

The left notch 124 and the right notch 123 are oriented so that the cover 126 is rotatable about the right screw 128 when the right screw 128 is loosely disposed in the right notch 123. In other words, cover rotation can occur when the right screw 128 is in the right notch 123 with threads engaged but prior to tightening. In this position, the cover 126 can rotate clockwise about the right screw 128. Thus, the right screw 128 provides an axis of rotation for the cover 126. This clockwise rotation facilitates convenient manipulation of the cover 126 by a person working the cover 126 to cover the access aperture 129, with the screws 128 engaged but not fully tightened. The clockwise rotation of the cover 126 about the right screw 128 provides the person with a capability to slide the left notch 124 of the cover 126 conveniently under the head of the left screw 128. Once the cover 126 is rotated so the left notch 124 is under the head of the left screw 128, the person (for example an installer) can tighten the two screws 128 to secure the cover 126.

To remove the cover 126, the person loosens the two screws 128 and then rotates the cover 126 counterclockwise about the right screw 128 so that the left notch 124 moves out from under the head of the left screw 128. Once the left notch 124 is free from the left screw 128, the installer can pull the right notch 123 out from under the right screw 128 to fully remove the cover 126.

As best seen in the views of Figures 1A, 1C, 1F, and 1G, the lens 120 of the luminaire 100 is positioned adjacent the lower, exit side of the light-emitting aperture 115. As illustrated, the lens 120 can mix and blend light emitted by two groups of light

Menard v. Signify
Menard Exhibit 1022
Page 032

emitting diodes 150, 155, with each group having a different color temperature. In some embodiments, the two groups of light emitting diodes 150, 155 may have color temperatures that differ by at least 500 degrees Kelvin, for example. The group of light emitting diodes 150 can be characterized as one light emitting diode light source, while the group of light emitting diodes 155 can be characterized as another light emitting diode light source. Other embodiments of a light emitting diode light source may have a single light emitting diode or more light emitting diodes than the embodiment illustrated in Figure 1. A reflector 130 is disposed in and lines the aperture 115 to guide and manage the emitted light between the light emitting diodes 150, 155 and the lens 120. In some embodiments, an upper lens (not illustrated) replaces the reflector 130.

The light emitting diodes 150, 155 are mounted on a substrate 125, for example a circuit board, and form part of a circuit 200. In the illustrated embodiment, the light emitting diodes 150, 155 are interspersed. In other embodiments, the light emitting diodes 150, 155 may be separated from one another or spatially segregated according to color temperature or other appropriate parameter. As discussed in further detail below, the circuit 200 supplies electricity to the light emitting diodes 150, 155 with a level of flexibility that facilitates multiple configurations suited to different applications and installation parameters.

Turning to Figures 2, 3, and 4, some example embodiments of the circuit 200 will be discussed in further detail with example reference to the luminaire 100. The circuit 200 can be applied to other indoor and outdoor luminaires.

Referring now to Figure 2, this figure illustrates an embodiment of the circuit 200 in an example block diagram form. The circuit 200 comprises a DC power supply 205 for supplying electrical energy that the circuit 200 delivers to the light emitting diodes 150, 155. In an example embodiment, the circuit 200 comprises a light emitting diode driver.

The dual inline pin switch 131 comprises individual switches 210 that provide an input for configuring the luminaire 100 to operate at a selected color temperature. In the illustrated embodiment, the circuit 200 comprises two manual switches 210. Other embodiments may have fewer or more switches 210. In various embodiments, the

Menard v. Signify
Menard Exhibit 1022
Page 033

switches 210 can be mounted to the housing 105 of the luminaire 100, for example within the housing 105 (as illustrated in Figure 1 and discussed above) or on an exterior surface of the housing 105. In some embodiments, the switches 210 are mounted on the substrate 125. In some embodiments, the switches 210 are implemented via firmware or may be solid state.

As an alternative to the illustrated dual inline pin switch 131, the input can comprise multiple DIP switches, one or more single in-line pin packages (SIP or SIPP), one or more rocker switches, one or more reed switches, one or more magnetic switches, one or more rotary switches, one or more rotary dials, one or more selectors or selector switches, one or more slide switches, one or more snap switches, one or more thumbwheels, one or more toggles or toggle switches, one or more keys or keypads, or one or more buttons or pushbuttons, to mention a few representative examples without limitation.

As further discussed below, a controller 215 operates the light emitting diodes 150, 155 according to state of the switches 210. In some example embodiments, the controller 215 comprises logic implemented in digital circuitry, for example discrete digital components or integrated circuitry. In some example embodiments, the controller 215 utilizes microprocessor-implemented logic with instructions stored in firmware or other static or non-transitory memory.

In the illustrated embodiment, the outputs of the controller 215 are connected to two MOSFET transistors 160 to control electrical flow through two light emitting diodes 150, 155. The illustrated MOSFET transistors 160 provide one example and can be replaced with other appropriate current control devices or circuits in various embodiments. The switches 210 thus configure the luminaire 100 to operate with either or both of the light emitting diodes 150, 155. The light emitting diodes 150, 155 illustrated in Figure 2 may represent two single light emitting diodes or two groups of light emitting diodes, for example.

Figure 3 illustrates a representative table 300 describing operation of the circuit 100 according to some example embodiments. In the example of Figure 3, the light emitting diode 150 produces light having a color temperature of 3,000 degrees Kelvin,

Menard v. Signify
Menard Exhibit 1022
Page 034

and the light emitting diode 155 produces light having a color temperature of 4,000 degrees Kelvin.

As shown in the example table 300, when both of the switches 210 are in the on state, the controller 215 causes the light emitting diode 155 to be off and the light emitting diode 150 to be on. Accordingly, the luminaire 100 emits illumination having a color temperature of 3,000 degrees Kelvin.

When both of the switches 210 are in the off state, the controller 215 causes the light emitting diode 155 to be on and the light emitting diode 150 to be off. Accordingly, the luminaire 100 emits illumination having a color temperature of 4,000 degrees Kelvin.

When one of the switches 210 is in the off state and the other of the switches 210 is on the on state, the controller 215 causes the light emitting diode 155 to be on and the light emitting diode 150 to be on. The luminaire 100 thus emits illumination having a color temperature of 3,500 degrees Kelvin. In some other example embodiments, the controller 215 can adjust the light output of one or both of the light emitting diodes 150, 155 to set the color temperature to a specific value with the range of 3,000 to 4,000 degrees Kelvin.

Accordingly, the controller 215 maps the four configurations of the two switches 210 to three states for configuring the two light emitting diodes 150, 155 for permanent or long-term operation. Mapping two switch configurations to a single mode of long-term operation can simplify configuration instructions and reduce errors during field configuration. The resulting configurations support multiple color temperatures of illumination from a single luminaire 100.

Some example embodiments support fewer or more than three states of illumination. For example, in one embodiment, the luminaire 100 comprises three strings of light emitting diodes 150 that have different color temperatures, such as 3,000 degrees Kelvin, 2,700 degrees Kelvin, and 4,000 degrees Kelvin. In this example, in addition to the states illustrated in Figure 3 and discussed above, the switching logic can support a fourth state in which only the 2,7000 degrees Kelvin string is on.

Menard v. Signify
Menard Exhibit 1022
Page 035

Figure 4 illustrates a schematic of an example embodiment of the circuit 200. The schematic of Figure 4 provides one example implementation of the block diagram illustrated in Figure 3.

As illustrated in Figure 4 in schematic form, the circuit 200 conforms to the foregoing discussion of the block diagram format of Figure 3. In Figure 4, the light emitting diodes 150, 155 of Figure 3 are respectively represented with groups of light emitting diodes 150, 155. Additionally, the schematic details include a thermal protective switch 305 for guarding against overheating. Figure 4 thus provides one example schematic for an embodiment of the electrical system of the luminaire 100 illustrated in Figure 1 and discussed above.

As will be appreciated by those of ordinary skill, the textual and illustrated disclosure provided herein supports a wide range of embodiments and implementations. In some non-limiting example embodiments of the disclosure, a luminaire can comprise: a housing; a substrate disposed in the housing; a first plurality of light emitting diodes that are mounted to the substrate and that have a first color temperature; a second plurality of light emitting diodes that are mounted to the substrate and that have a second color temperature; and a plurality of manual switches that are disposed at the housing for permanently configuring the luminaire to: provide illumination of the first color temperature by enabling the first plurality of light emitting diodes; provide illumination of the second color temperature by enabling the second plurality of light emitting diodes; and provide illumination of a third color temperature that is between the first color temperature and the second color temperature by enabling the first plurality of light emitting diodes and the second plurality of light emitting diodes.

In some example embodiments of the luminaire, the housing can comprise an aperture that is configured for emitting area illumination, and the substrate is oriented to emit light through the aperture. In some example embodiments of the luminaire, the plurality of manual switches are mounted to the substrate. In some example embodiments of the luminaire, the plurality of manual switches are mounted in the housing. In some example embodiments of the luminaire, the plurality of manual switches are mounted to the housing. In some example embodiments of the luminaire, the plurality of manual switches comprise a dual inline pin (DIP) switch. In some

Menard v. Signify
Menard Exhibit 1022
Page 036

example embodiments of the luminaire, the plurality of manual switches provide two switch states, and each of the two switch states provides illumination of the third color temperature by enabling the first plurality of light emitting diodes and the second plurality of light emitting diodes. In some example embodiments of the luminaire, the housing is circular and comprises a lip configured for extending around an aperture in a ceiling. In some example embodiments of the luminaire, the housing comprises a wiring port disposed on a side of the housing. In some example embodiments of the luminaire, the housing comprises a light-emitting aperture in which the substrate is disposed. In some example embodiments, the luminaire further comprises: an aperture disposed at a lower side of the housing; a lens disposed at the aperture for refracting light emitted by the first and second light emitting diodes; and a reflector that is disposed between the lens and the light emitting diodes and that is operative to reflect light between the first and second light emitting diodes and the lens. In some example embodiments of the luminaire, the housing is circular and comprises a lip configured for extending around an aperture in a ceiling. In some example embodiments of the luminaire, the housing comprises a wiring port disposed on a side of the housing. In some example embodiments of the luminaire, the housing forms a cavity associated with the aperture. In some example embodiments of the luminaire, the first and second light source are mounted to a substrate that is disposed at an end of the cavity. In some example embodiments, the luminaire further comprises a reflector that is disposed in the cavity between the lens and the first and second light sources, the reflector operative to reflect light between the first and second light sources and the lens.

Technology for providing a configurable a luminaire has been described. Many modifications and other embodiments of the disclosures set forth herein will come to mind to one skilled in the art to which these disclosures pertain having the benefit of the teachings presented in the foregoing descriptions and the associated drawings. Therefore, it is to be understood that the disclosures are not to be limited to the specific embodiments disclosed and that modifications and other embodiments are intended to be included within the scope of this application. Although specific terms are employed herein, they are used in a generic and descriptive sense only and not for purposes of limitation.

Menard v. Signify
Menard Exhibit 1022
Page 037

CLAIMS

What is claimed is:

1. A luminaire comprising:

an input settable in a first, a second, a third, and a fourth state;

a first light source having a first color temperature;

a second light source having a second color temperature; and

a controller connected to the input, the first light source, and the second light source, the controller configured to:

power the first light source when the input is in the first state;

power the second light source when the input is in the second state;

power the first light source and the second light source when the input is in the third state; and

power the first light source and the second light source when the input is in the fourth state.

2. The luminaire of Claim 1, wherein the input comprises a first switch and a second switch.

3. The luminaire of Claim 2, wherein the first state comprises the first switch off and the second switch off,

wherein the second state comprises the first switch on and the second switch on,

wherein the third state comprises the first switch on and the second switch off, and

wherein the fourth state comprises the first switch off and the second switch on.

Menard v. Signify
Menard Exhibit 1022
Page 038

4. The luminaire of Claim 3, wherein when the input is set to the first state, the luminaire emits light of the first color temperature,

wherein when the input is set to the second state, the luminaire emits light of the second color temperature,

wherein when the input is set to the third state, the luminaire emits light of a third color temperature that is between the first color temperature and the second color temperature, and

wherein when the input is set to the fourth state, the luminaire emits light of the third color temperature.

5. The luminaire of Claim 5, wherein the first light source comprises a first light emitting diode,

wherein the second light source comprises a second light emitting diode, and

wherein the first color temperature is separated from the second color temperature by no less than 500 degrees Kelvin.

6. The luminaire of Claim 1, wherein the first light source comprises a first bank of light emitting diodes, and

wherein the second light source comprises a second bank of light emitting diodes.

7. The luminaire of Claim 1, wherein the controller comprises digital logic,

wherein the input comprises a dual inline pin (DIP) switch mounted on a circuit board, and

wherein a first configuration of the DIP switch defines the first state, a second configuration of the DIP switch defines the second state, a third configuration of the DIP switch defines the third state, and a fourth configuration of the DIP switch defines the fourth state.

Menard v. Signify
Menard Exhibit 1022
Page 039

8. The luminaire of Claim 1, further comprising a housing that encloses the first light source, the second light source, the input, and the controller, the housing comprising:

a first aperture that provides access to the input for setting the input manually to the first state, the second state, the third state, or the fourth state during luminaire installation; and

a cover covering the aperture and comprising a second aperture that is sized to receive an electrical cable for powering the luminaire.

9. The luminaire of Claim 8, wherein the input comprises a dual inline pin (DIP) switch mounted to the housing adjacent the first aperture, and

wherein the cover further comprises:

a first notch that is disposed on a first side of the cover and that is sized to receive a first fastener for fastening the cover to the housing; and

a second notch that is disposed on a second side of the cover and that is sized to receive a second fastener for fastening the cover to the housing,

wherein the first notch and the second notch are oriented so that the cover is rotatable about the first fastener when the first fastener is loosely disposed in the first notch, with the second fastener disposable in the second notch during said rotation of the cover.

Menard v. Signify
Menard Exhibit 1022
Page 040

10. A luminaire comprising:

a first light emitting diode light source configured to produce illumination of a first color temperature;

a second light emitting diode light source configured to produce illumination of a second color temperature that is different than the first color temperature;

an input settable in a first plurality of states; and

a circuit that is connected to the first light emitting diode light, the second light emitting diode light source, and the input and that is operable to:

map the first plurality of states into a second plurality of states, wherein the first plurality is greater than the second plurality; and

control the first light emitting diode light source and the second light emitting diode light source according to the second plurality of states.

11. The luminaire of Claim 10, wherein mapping the first plurality of states into the second plurality of states comprises producing one state in the second plurality of states for each of two states in the first plurality of states.

12. The luminaire of Claim 10, wherein the first plurality of states comprises a first state and a second state,

wherein the second plurality of states comprises a third state, and

wherein mapping the first plurality of states into the second plurality of states comprises mapping the first state and the second state into the third state.

Menard v. Signify
Menard Exhibit 1022
Page 041

13. The luminaire of Claim 12, wherein in the first state, the luminaire produces illumination of the first color temperature using the first light emitting diode light source,

wherein in the second state, the luminaire produces illumination of the second color temperature using the second light emitting diode light source,

wherein in the third state, the luminaire produces illumination of the third color temperature using the first light emitting diode light source and the second light emitting diode light source, and

wherein the third color temperature is between the first color temperature and the second color temperature.

14. The luminaire of Claim 10, wherein the input comprises a dual inline pin (DIP) switch,

wherein the luminaire further comprising a housing that encloses the first light emitting diode light source, the second light emitting diode light source, the DIP switch, and the circuit,

wherein the housing comprises:

a first aperture that provides access to the DIP switch for state selection during luminaire installation, and

a cover configured for covering the aperture.

Menard v. Signify
Menard Exhibit 1022
Page 042

15. The luminaire of Claim 10, wherein the first light emitting diode light source comprises at least two light emitting diodes,

wherein the second light emitting diode light source comprises at least two other light emitting diodes,

wherein the circuit comprises:

digital logic; and

a light emitting diode driver that is controlled by the digital logic,

wherein there are four states in the first plurality of states,

wherein there are three states in the second plurality of states, and

wherein the three states correspond to three different color temperatures of illumination produced by the luminaire.

Menard v. Signify
Menard Exhibit 1022
Page 043

16. A luminaire comprising:

a housing comprising an aperture;

a lens disposed at the aperture;

a first light source and a second light source that are mounted in the housing and that are oriented to emit light through the aperture and the lens for area illumination, wherein the first light source has a first color temperature and the second light source has a second color temperature; and

switches that are mounted at the housing and that are operable to configure the luminaire in a first long-term operating configuration, a second long-term operating configuration, and a third long-term operating configuration,

wherein in the first long-term operating configuration, the first light source is active, the second light source is inactive, and the luminaire is configured to emit light of the first color temperature,

wherein in the second long-term operating configuration, the first light source is inactive, the second light source is active, and the luminaire is configured to emit light of the second color temperature, and

wherein in the third long-term operating configuration, the first light source is active, the second light source is active, and the luminaire is configured to emit light of a third color temperature that is between the first color temperature and the second color temperature.

17. The luminaire of Claim 16, wherein the switches have two switch states that each produces the third long-term operating configuration.

18. The luminaire of Claim 16, wherein the first light source comprises at least one light emitting diode, and

wherein the second light source comprises at least one other light emitting diode.

Menard v. Signify
Menard Exhibit 1022
Page 044

19. The luminaire of Claim 18, wherein the luminaire is configured for mounting to a ceiling,

wherein the housing further comprises a cover sized to cover the aperture, and

wherein the switches are disposed in the housing adjacent the aperture for access during luminaire installation.

20. The luminaire of Claim 19, wherein the switches comprise a dual inline pin (DIP) switch.

Menard v. Signify
Menard Exhibit 1022
Page 045

ABSTRACT OF THE DISCLOSURE

A system can configure a luminaire for providing illumination of a selected color temperature, a selected lumen output, or a selected photometric distribution. The luminaire can comprise at least two light sources that have different illumination characteristics, for example different color temperatures, different lumen outputs, or different photometric distributions. The system can configure the luminaire to operate a first of the two light sources, a second of the two light sources, or both of the light sources based on an input. When the luminaire is configured to operate both of the light sources, the luminaire can produce illumination having a color temperature, a lumen output, or a photometric distribution that is different than either of the two light sources.

Menard v. Signify
Menard Exhibit 1022
Page 046

Electronic Patent Application Fee Transmittal

Application Number:	
Filing Date:	
Title of Invention:	Configurable Lighting System
First Named Inventor/Applicant Name:	Steven Walter Pyshos
Filer:	Robert Timothy Neufeld
Attorney Docket Number:	13682.225908

Filed as Large Entity

Filing Fees for Utility under 35 USC 111(a)

Description	Fee Code	Quantity	Amount	Sub-Total in USD($)
Basic Filing:				
UTILITY APPLICATION FILING	1011	1	280	280
UTILITY SEARCH FEE	1111	1	600	600
UTILITY EXAMINATION FEE	1311	1	720	720
Pages:				
Claims:				
Miscellaneous-Filing:				
Petition:				
Patent-Appeals-and-Interference:				

Description	Fee Code	Quantity	Amount	Sub-Total in USD($)
Post-Allowance-and-Post-Issuance:				
Extension-of-Time:				
Miscellaneous:				
		Total in USD ($)		**1600**

Electronic Acknowledgement Receipt	
EFS ID:	28380365
Application Number:	15435141
International Application Number:	
Confirmation Number:	2406
Title of Invention:	Configurable Lighting System
First Named Inventor/Applicant Name:	Steven Walter Pyshos
Customer Number:	91764
Filer:	Robert Timothy Neufeld
Filer Authorized By:	
Attorney Docket Number:	13682.225908
Receipt Date:	16-FEB-2017
Filing Date:	
Time Stamp:	19:14:47
Application Type:	Utility under 35 USC 111(a)

Payment information:

Submitted with Payment	yes
Payment Type	CARD
Payment was successfully received in RAM	$1600
RAM confirmation Number	021717INTEFSW19151100
Deposit Account	
Authorized User	
The Director of the USPTO is hereby authorized to charge indicated fees and credit any overpayment as follows:	

File Listing:

Document Number	Document Description	File Name	File Size(Bytes)/ Message Digest	Multi Part /.zip	Pages (if appl.)
1	Transmittal of New Application	transmittal.pdf	275718 1424370c5f8e9f9f5a169de4ae6173db3c826112	no	2
Warnings:					
Information:					
2	Application Data Sheet	ads.pdf	1823107 5a8cff3f2eddb84ae41b8e5f2db54e9e27025970	no	9
Warnings:					
Information:					
3	Drawings-only black and white line drawings	fig.pdf	721641 627a2adc6f202308f5db19d98926b5bd955ce4f4	no	10
Warnings:					
Information:					
4	Oath or Declaration filed	Decs_225908.pdf	1979100 ce543ed2e75d5014f942609c817da04f2cd88ac1	no	3
Warnings:					
Information:					
5	Specification	spec_225908.pdf	130745 e787321c0f59a77c1bb1d470f929b6472602ff7a	no	22
Warnings:					
Information:					
6	Fee Worksheet (SB06)	fee-info.pdf	35066 7746d13cf6dc448a82178fee244ca0ed5feba78f	no	2
Warnings:					
Information:					

Total Files Size (in bytes):	4965377

This Acknowledgement Receipt evidences receipt on the noted date by the USPTO of the indicated documents, characterized by the applicant, and including page counts, where applicable. It serves as evidence of receipt similar to a Post Card, as described in MPEP 503.

New Applications Under 35 U.S.C. 111
If a new application is being filed and the application includes the necessary components for a filing date (see 37 CFR 1.53(b)-(d) and MPEP 506), a Filing Receipt (37 CFR 1.54) will be issued in due course and the date shown on this Acknowledgement Receipt will establish the filing date of the application.

National Stage of an International Application under 35 U.S.C. 371
If a timely submission to enter the national stage of an international application is compliant with the conditions of 35 U.S.C. 371 and other applicable requirements a Form PCT/DO/EO/903 indicating acceptance of the application as a national stage submission under 35 U.S.C. 371 will be issued in addition to the Filing Receipt, in due course.

New International Application Filed with the USPTO as a Receiving Office
If a new international application is being filed and the international application includes the necessary components for an international filing date (see PCT Article 11 and MPEP 1810), a Notification of the International Application Number and of the International Filing Date (Form PCT/RO/105) will be issued in due course, subject to prescriptions concerning national security, and the date shown on this Acknowledgement Receipt will establish the international filing date of the application.

PATENT APPLICATION FEE DETERMINATION RECORD Substitute for Form PTO-875	Application or Docket Number 15/435,141

APPLICATION AS FILED - PART I

FOR	(Column 1) NUMBER FILED	(Column 2) NUMBER EXTRA	SMALL ENTITY RATE($)	SMALL ENTITY FEE($)	OR	OTHER THAN SMALL ENTITY RATE($)	OTHER THAN SMALL ENTITY FEE($)
BASIC FEE (37 CFR 1.16(a), (b), or (c))	N/A	N/A	N/A			N/A	280
SEARCH FEE (37 CFR 1.16(k), (i), or (m))	N/A	N/A	N/A			N/A	600
EXAMINATION FEE (37 CFR 1.16(o), (p), or (q))	N/A	N/A	N/A			N/A	720
TOTAL CLAIMS (37 CFR 1.16(i))	20 minus 20 =	*			OR	x 80 =	0.00
INDEPENDENT CLAIMS (37 CFR 1.16(h))	3 minus 3 =	*				x 420 =	0.00
APPLICATION SIZE FEE (37 CFR 1.16(s))	If the specification and drawings exceed 100 sheets of paper, the application size fee due is $310 ($155 for small entity) for each additional 50 sheets or fraction thereof. See 35 U.S.C. 41(a)(1)(G) and 37 CFR 1.16(s).						0.00
MULTIPLE DEPENDENT CLAIM PRESENT (37 CFR 1.16(j))							0.00
* If the difference in column 1 is less than zero, enter "0" in column 2.			TOTAL			TOTAL	1600

APPLICATION AS AMENDED - PART II

		(Column 1) CLAIMS REMAINING AFTER AMENDMENT		(Column 2) HIGHEST NUMBER PREVIOUSLY PAID FOR	(Column 3) PRESENT EXTRA	SMALL ENTITY RATE($)	SMALL ENTITY ADDITIONAL FEE($)	OR	OTHER THAN SMALL ENTITY RATE($)	OTHER THAN SMALL ENTITY ADDITIONAL FEE($)
AMENDMENT A	Total (37 CFR 1.16(i))	*	Minus	**	=	x =		OR	x =	
AMENDMENT A	Independent (37 CFR 1.16(h))	*	Minus	***	=	x =		OR	x =	
AMENDMENT A	Application Size Fee (37 CFR 1.16(s))									
AMENDMENT A	FIRST PRESENTATION OF MULTIPLE DEPENDENT CLAIM (37 CFR 1.16(j))							OR		
						TOTAL ADD'L FEE		OR	TOTAL ADD'L FEE	

		(Column 1) CLAIMS REMAINING AFTER AMENDMENT		(Column 2) HIGHEST NUMBER PREVIOUSLY PAID FOR	(Column 3) PRESENT EXTRA	RATE($)	ADDITIONAL FEE($)	OR	RATE($)	ADDITIONAL FEE($)
AMENDMENT B	Total (37 CFR 1.16(i))	*	Minus	**	=	x =		OR	x =	
AMENDMENT B	Independent (37 CFR 1.16(h))	*	Minus	***	=	x =		OR	x =	
AMENDMENT B	Application Size Fee (37 CFR 1.16(s))									
AMENDMENT B	FIRST PRESENTATION OF MULTIPLE DEPENDENT CLAIM (37 CFR 1.16(j))							OR		
						TOTAL ADD'L FEE		OR	TOTAL ADD'L FEE	

* If the entry in column 1 is less than the entry in column 2, write "0" in column 3.
** If the "Highest Number Previously Paid For" IN THIS SPACE is less than 20, enter "20".
*** If the "Highest Number Previously Paid For" IN THIS SPACE is less than 3, enter "3".
The "Highest Number Previously Paid For" (Total or Independent) is the highest found in the appropriate box in column 1.

UNITED STATES PATENT AND TRADEMARK OFFICE

UNITED STATES DEPARTMENT OF COMMERCE
United States Patent and Trademark Office
Address: COMMISSIONER FOR PATENTS
P.O. Box 1450
Alexandria, Virginia 22313-1450
www.uspto.gov

APPLICATION NUMBER	FILING or 371(c) DATE	GRP ART UNIT	FIL FEE REC'D	ATTY.DOCKET.NO	TOT CLAIMS	IND CLAIMS
15/435,141	02/16/2017	2875	1600	13682.225908	20	3

CONFIRMATION NO. 2406

FILING RECEIPT

OC000000089468508

91764
King & Spalding LLP (Eaton/Cooper)
ATTN: IP Docketing Department
1100 Louisiana Street, Suite 4000
Houston, TX 77002-5213

Date Mailed: 02/28/2017

Receipt is acknowledged of this non-provisional patent application. The application will be taken up for examination in due course. Applicant will be notified as to the results of the examination. Any correspondence concerning the application must include the following identification information: the U.S. APPLICATION NUMBER, FILING DATE, NAME OF APPLICANT, and TITLE OF INVENTION. Fees transmitted by check or draft are subject to collection. Please verify the accuracy of the data presented on this receipt. **If an error is noted on this Filing Receipt, please submit a written request for a Filing Receipt Correction. Please provide a copy of this Filing Receipt with the changes noted thereon. If you received a "Notice to File Missing Parts" for this application, please submit any corrections to this Filing Receipt with your reply to the Notice. When the USPTO processes the reply to the Notice, the USPTO will generate another Filing Receipt incorporating the requested corrections**

Inventor(s)

Steven Walter Pyshos, Peachtree City, GA;
Raymond Janik, Fayetteville, GA;
Kevin Roy Harpenau, Atlanta, GA;

Applicant(s)

Cooper Technologies Company, Houston, TX;

Power of Attorney: None

Domestic Priority data as claimed by applicant

This appln claims benefit of 62/297,424 02/19/2016

Foreign Applications for which priority is claimed (You may be eligible to benefit from the **Patent Prosecution Highway** program at the USPTO. Please see http://www.uspto.gov for more information.) - None.
Foreign application information must be provided in an Application Data Sheet in order to constitute a claim to foreign priority. See 37 CFR 1.55 and 1.76.

Permission to Access Application via Priority Document Exchange: Yes

Permission to Access Search Results: Yes

Applicant may provide or rescind an authorization for access using Form PTO/SB/39 or Form PTO/SB/69 as appropriate.

If Required, Foreign Filing License Granted: 02/24/2017

The country code and number of your priority application, to be used for filing abroad under the Paris Convention, is **US 15/435,141**

Projected Publication Date: Request for Non-Publication Acknowledged

Non-Publication Request: Yes

Early Publication Request: No
Title

Configurable Lighting System

Preliminary Class

362

Statement under 37 CFR 1.55 or 1.78 for AIA (First Inventor to File) Transition Applications: No

PROTECTING YOUR INVENTION OUTSIDE THE UNITED STATES

Since the rights granted by a U.S. patent extend only throughout the territory of the United States and have no effect in a foreign country, an inventor who wishes patent protection in another country must apply for a patent in a specific country or in regional patent offices. Applicants may wish to consider the filing of an international application under the Patent Cooperation Treaty (PCT). An international (PCT) application generally has the same effect as a regular national patent application in each PCT-member country. The PCT process **simplifies** the filing of patent applications on the same invention in member countries, but **does not result** in a grant of "an international patent" and does not eliminate the need of applicants to file additional documents and fees in countries where patent protection is desired.

Almost every country has its own patent law, and a person desiring a patent in a particular country must make an application for patent in that country in accordance with its particular laws. Since the laws of many countries differ in various respects from the patent law of the United States, applicants are advised to seek guidance from specific foreign countries to ensure that patent rights are not lost prematurely.

Applicants also are advised that in the case of inventions made in the United States, the Director of the USPTO must issue a license before applicants can apply for a patent in a foreign country. The filing of a U.S. patent application serves as a request for a foreign filing license. The application's filing receipt contains further information and guidance as to the status of applicant's license for foreign filing.

Applicants may wish to consult the USPTO booklet, "General Information Concerning Patents" (specifically, the section entitled "Treaties and Foreign Patents") for more information on timeframes and deadlines for filing foreign patent applications. The guide is available either by contacting the USPTO Contact Center at 800-786-9199, or it can be viewed on the USPTO website at http://www.uspto.gov/web/offices/pac/doc/general/index.html.

For information on preventing theft of your intellectual property (patents, trademarks and copyrights), you may wish to consult the U.S. Government website, http://www.stopfakes.gov. Part of a Department of Commerce initiative, this website includes self-help "toolkits" giving innovators guidance on how to protect intellectual property in specific countries such as China, Korea and Mexico. For questions regarding patent enforcement issues, applicants may call the U.S. Government hotline at 1-866-999-HALT (1-866-999-4258).

Menard v. Signify
Menard Exhibit 1022
Page 054

LICENSE FOR FOREIGN FILING UNDER

Title 35, United States Code, Section 184

Title 37, Code of Federal Regulations, 5.11 & 5.15

GRANTED

The applicant has been granted a license under 35 U.S.C. 184, if the phrase "IF REQUIRED, FOREIGN FILING LICENSE GRANTED" followed by a date appears on this form. Such licenses are issued in all applications where the conditions for issuance of a license have been met, regardless of whether or not a license may be required as set forth in 37 CFR 5.15. The scope and limitations of this license are set forth in 37 CFR 5.15(a) unless an earlier license has been issued under 37 CFR 5.15(b). The license is subject to revocation upon written notification. The date indicated is the effective date of the license, unless an earlier license of similar scope has been granted under 37 CFR 5.13 or 5.14.

This license is to be retained by the licensee and may be used at any time on or after the effective date thereof unless it is revoked. This license is automatically transferred to any related applications(s) filed under 37 CFR 1.53(d). This license is not retroactive.

The grant of a license does not in any way lessen the responsibility of a licensee for the security of the subject matter as imposed by any Government contract or the provisions of existing laws relating to espionage and the national security or the export of technical data. Licensees should apprise themselves of current regulations especially with respect to certain countries, of other agencies, particularly the Office of Defense Trade Controls, Department of State (with respect to Arms, Munitions and Implements of War (22 CFR 121-128)); the Bureau of Industry and Security, Department of Commerce (15 CFR parts 730-774); the Office of Foreign AssetsControl, Department of Treasury (31 CFR Parts 500+) and the Department of Energy.

NOT GRANTED

No license under 35 U.S.C. 184 has been granted at this time, if the phrase "IF REQUIRED, FOREIGN FILING LICENSE GRANTED" DOES NOT appear on this form. Applicant may still petition for a license under 37 CFR 5.12, if a license is desired before the expiration of 6 months from the filing date of the application. If 6 months has lapsed from the filing date of this application and the licensee has not received any indication of a secrecy order under 35 U.S.C. 181, the licensee may foreign file the application pursuant to 37 CFR 5.15(b).

SelectUSA

The United States represents the largest, most dynamic marketplace in the world and is an unparalleled location for business investment, innovation, and commercialization of new technologies. The U.S. offers tremendous resources and advantages for those who invest and manufacture goods here. Through SelectUSA, our nation works to promote and facilitate business investment. SelectUSA provides information assistance to the international investor community; serves as an ombudsman for existing and potential investors; advocates on behalf of U.S. cities, states, and regions competing for global investment; and counsels U.S. economic development organizations on investment attraction best practices. To learn more about why the United States is the best country in the world to develop technology, manufacture products, deliver services, and grow your business, visit http://www.SelectUSA.gov or call +1-202-482-6800.

PTO/SB/36 (07-09)
Approved for use through 07/31/2012. OMB 0651-0031
U.S. Patent and Trademark Office; U. S. DEPARTMENT OF COMMERCE
Under the Paperwork Reduction Act of 1995, no persons are required to respond to a collection of information unless it displays a valid OMB control number.

RESCISSION OF PREVIOUS NONPUBLICATION REQUEST
(35 U.S.C. 122(b)(2)(B)(ii))
AND, IF APPLICABLE,
NOTICE OF FOREIGN FILING
(35 U.S.C. 122(b)(2)(B)(iii))

Send completed form to:
Mail Stop PG Pub
Commissioner for Patents
P.O. Box 1450
Alexandria, VA 22313-1450
FAX: (571) 273-8300

Application Number	15/435,141
Filing Date	February 16, 2017
First Named Inventor	Steven Walter Pyshos
Title	Configurable Lighting System
Atty Docket Number	13682.225908
Art Unit	2844
Examiner	Jimmy T. Vu

A request that the above-identified application not be published under 35 U.S.C. 122(b) (nonpublication request) was included with the above-identified application on filing pursuant to 35 U.S.C. 122(b)(2)(B)(i).
I hereby **rescind** the previous nonpublication request.

If a notice of foreign or international filing is or will be required by 35 U.S.C. 122(b)(2)(B)(iii) and 37 CFR 1.213(c), I hereby provide such notice. This notice is being provided no later than forty-five (**45**) days after the date of such foreign or international filing.

*If a notice of subsequent foreign or international filing required by 35 U.S.C. 122(b)(2)(B)(iii) and 37 CFR 1.213(c) was not filed within forty-five (**45**) days after the date of filing of the foreign or international application, the application is ABANDONED, and a petition to revive under 37 CFR 1.137(b) is required. See 37 CFR 1.137(f).*

/ Robert T. Neufeld /	July 11, 2017
Signature	Date
Robert T. Neufeld	48,394
Typed or printed name	Registration Number, if applicable
404-572-3505	
Telephone Number	

This request must be signed in compliance with 37 CFR 1.33(b).

If information or assistance is needed in completing this form, please contact the Pre-Grant Publication Division at (703)605-4283 or by e-mail at PGPub@USPTO.gov.

CERTIFICATE OF MAILING OR TRANSMISSION

I hereby certify that this correspondence is being deposited with the United States Postal Service with sufficient postage as first class mail in an envelope addressed to: Mail Stop PG Pub, Commissioner for Patents, P.O. Box 1450, Alexandria, VA 22313-1450, or facsimile transmitted to the U.S. Patent and Trademark Office on the date shown below.

Signature	/ Robert T. Neufeld /		
Name (Print/Type)	Robert T. Neufeld	Date	July 11, 2017

This collection of information is required by 37 CFR 1.213(b). The information is required to obtain or retain a benefit by the public which is to file (and by the USPTO to process) an application. Confidentiality is governed by 35 U.S.C. 122 and 37 CFR 1.11 and 1.14. This collection is estimated to take 6 minutes to complete, including gathering, preparing, and submitting the completed application form to the USPTO. Time will vary depending upon the individual case. Any comments on the amount of time you require to complete this form and/or suggestions for reducing this burden, should be sent to the Chief Information Officer, U.S. Patent and Trademark Office, U.S. Department of Commerce, P.O. Box 1450, Alexandria, VA 22313-1450. DO NOT SEND FEES OR COMPLETED FORMS TO THIS ADDRESS. **SEND TO: Mail Stop PG Pub, Commissioner for Patents, P.O. Box 1450, Alexandria, VA 22313-1450.**

If you need assistance in completing the form, call 1-800-PTO-9199 and select option 2.

Privacy Act Statement

The **Privacy Act of 1974 (P.L. 93-579)** requires that you be given certain information in connection with your submission of the attached form related to a patent application or patent. Accordingly, pursuant to the requirements of the Act, please be advised that: (1) the general authority for the collection of this information is 35 U.S.C. 2(b)(2); (2) furnishing of the information solicited is voluntary; and (3) the principal purpose for which the information is used by the U.S. Patent and Trademark Office is to process and/or examine your submission related to a patent application or patent. If you do not furnish the requested information, the U.S. Patent and Trademark Office may not be able to process and/or examine your submission, which may result in termination of proceedings or abandonment of the application or expiration of the patent.

The information provided by you in this form will be subject to the following routine uses:

1. The information on this form will be treated confidentially to the extent allowed under the Freedom of Information Act (5 U.S.C. 552) and the Privacy Act (5 U.S.C 552a). Records from this system of records may be disclosed to the Department of Justice to determine whether disclosure of these records is required by the Freedom of Information Act.
2. A record from this system of records may be disclosed, as a routine use, in the course of presenting evidence to a court, magistrate, or administrative tribunal, including disclosures to opposing counsel in the course of settlement negotiations.
3. A record in this system of records may be disclosed, as a routine use, to a Member of Congress submitting a request involving an individual, to whom the record pertains, when the individual has requested assistance from the Member with respect to the subject matter of the record.
4. A record in this system of records may be disclosed, as a routine use, to a contractor of the Agency having need for the information in order to perform a contract. Recipients of information shall be required to comply with the requirements of the Privacy Act of 1974, as amended, pursuant to 5 U.S.C. 552a(m).
5. A record related to an International Application filed under the Patent Cooperation Treaty in this system of records may be disclosed, as a routine use, to the International Bureau of the World Intellectual Property Organization, pursuant to the Patent Cooperation Treaty.
6. A record in this system of records may be disclosed, as a routine use, to another federal agency for purposes of National Security review (35 U.S.C. 181) and for review pursuant to the Atomic Energy Act (42 U.S.C. 218(c)).
7. A record from this system of records may be disclosed, as a routine use, to the Administrator, General Services, or his/her designee, during an inspection of records conducted by GSA as part of that agency's responsibility to recommend improvements in records management practices and programs, under authority of 44 U.S.C. 2904 and 2906. Such disclosure shall be made in accordance with the GSA regulations governing inspection of records for this purpose, and any other relevant (*i.e.*, GSA or Commerce) directive. Such disclosure shall not be used to make determinations about individuals.
8. A record from this system of records may be disclosed, as a routine use, to the public after either publication of the application pursuant to 35 U.S.C. 122(b) or issuance of a patent pursuant to 35 U.S.C. 151. Further, a record may be disclosed, subject to the limitations of 37 CFR 1.14, as a routine use, to the public if the record was filed in an application which became abandoned or in which the proceedings were terminated and which application is referenced by either a published application, an application open to public inspection or an issued patent.
9. A record from this system of records may be disclosed, as a routine use, to a Federal, State, or local law enforcement agency, if the USPTO becomes aware of a violation or potential violation of law or regulation.

Electronic Acknowledgement Receipt

EFS ID:	29749075
Application Number:	15435141
International Application Number:	
Confirmation Number:	2406
Title of Invention:	Configurable Lighting System
First Named Inventor/Applicant Name:	Steven Walter Pyshos
Customer Number:	91764
Filer:	Robert Timothy Neufeld
Filer Authorized By:	
Attorney Docket Number:	13682.225908
Receipt Date:	11-JUL-2017
Filing Date:	16-FEB-2017
Time Stamp:	15:29:43
Application Type:	Utility under 35 USC 111(a)

Payment information:

Submitted with Payment	no

File Listing:

Document Number	Document Description	File Name	File Size(Bytes)/ Message Digest	Multi Part /.zip	Pages (if appl.)
1	Rescind Nonpublication Request for Pre Grant Pub	Rescind_225908.pdf	183105 847c95ebd8df6c7614b98a3d35cefd07b934ce2c	no	2

Warnings:

Information:	
Total Files Size (in bytes):	183105

This Acknowledgement Receipt evidences receipt on the noted date by the USPTO of the indicated documents, characterized by the applicant, and including page counts, where applicable. It serves as evidence of receipt similar to a Post Card, as described in MPEP 503.

New Applications Under 35 U.S.C. 111
If a new application is being filed and the application includes the necessary components for a filing date (see 37 CFR 1.53(b)-(d) and MPEP 506), a Filing Receipt (37 CFR 1.54) will be issued in due course and the date shown on this Acknowledgement Receipt will establish the filing date of the application.
National Stage of an International Application under 35 U.S.C. 371
If a timely submission to enter the national stage of an international application is compliant with the conditions of 35 U.S.C. 371 and other applicable requirements a Form PCT/DO/EO/903 indicating acceptance of the application as a national stage submission under 35 U.S.C. 371 will be issued in addition to the Filing Receipt, in due course.
New International Application Filed with the USPTO as a Receiving Office
If a new international application is being filed and the international application includes the necessary components for an international filing date (see PCT Article 11 and MPEP 1810), a Notification of the International Application Number and of the International Filing Date (Form PCT/RO/105) will be issued in due course, subject to prescriptions concerning national security, and the date shown on this Acknowledgement Receipt will establish the international filing date of the application.

UNITED STATES PATENT AND TRADEMARK OFFICE

UNITED STATES DEPARTMENT OF COMMERCE
United States Patent and Trademark Office
Address: COMMISSIONER FOR PATENTS
P.O. Box 1450
Alexandria, Virginia 22313-1450
www.uspto.gov

APPLICATION NUMBER	FILING OR 371(C) DATE	FIRST NAMED APPLICANT	ATTY. DOCKET NO./TITLE
15/435,141	02/16/2017	Steven Walter Pyshos	13682.225908

CONFIRMATION NO. 2406

NEW OR REVISED PPD NOTICE

91764
King & Spalding LLP (Eaton/Cooper)
ATTN: IP Docketing Department
1100 Louisiana Street, Suite 4000
Houston, TX 77002-5213

OC000000092749543

NOTICE OF NEW OR REVISED PROJECTED PUBLICATION DATE

The above-identified application has a new or revised projected publication date. The current projected publication date for this application is 10/19/2017. If this is a new projected publication date (there was no previous projected publication date), the application has been cleared by Licensing & Review or a secrecy order has been rescinded and the application is now in the publication queue.

If this is a revised projected publication date (one that is different from a previously communicated projected publication date), the publication date has been revised due to processing delays in the USPTO or the abandonment and subsequent revival of an application. The application is anticipated to be published on a date that is more than six weeks different from the originally-projected publication date.

More detailed publication information is available through the private side of Patent Application Information Retrieval (PAIR) System. The direct link to access PAIR is currently http://pair.uspto.gov. Further assistance in electronically accessing the publication, or about PAIR, is available by calling the Patent Electronic Business Center at 1-866-217-9197.

Questions relating to this Notice should be directed to the Office of Data Management, Application Assistance Unit at (571) 272-4000, or (571) 272-4200, or 1-888-786-0101.

UNITED STATES PATENT AND TRADEMARK OFFICE

UNITED STATES DEPARTMENT OF COMMERCE
United States Patent and Trademark Office
Address: COMMISSIONER FOR PATENTS
P.O. Box 1450
Alexandria, Virginia 22313-1450
www.uspto.gov

APPLICATION NO.	FILING DATE	FIRST NAMED INVENTOR	ATTORNEY DOCKET NO.	CONFIRMATION NO.
15/435,141	02/16/2017	Steven Walter Pyshos	13682.225908	2406

91764 7590 07/14/2017
King & Spalding LLP (Eaton/Cooper)
ATTN: IP Docketing Department
1100 Louisiana Street, Suite 4000
Houston, TX 77002-5213

EXAMINER
VU, JIMMY T

ART UNIT	PAPER NUMBER
2844	

NOTIFICATION DATE	DELIVERY MODE
07/14/2017	ELECTRONIC

Please find below and/or attached an Office communication concerning this application or proceeding.

The time period for reply, if any, is set in the attached communication.

Notice of the Office communication was sent electronically on above-indicated "Notification Date" to the following e-mail address(es):

jvillegas@kslaw.com
houpatentdocket@kslaw.com
nduby@kslaw.com

Office Action Summary	Application No. 15/435,141	Applicant(s) PYSHOS ET AL.	
	Examiner JIMMY VU	Art Unit 2844	AIA (First Inventor to File) Status Yes

-- The MAILING DATE of this communication appears on the cover sheet with the correspondence address --

Period for Reply

A SHORTENED STATUTORY PERIOD FOR REPLY IS SET TO EXPIRE 2 MONTHS FROM THE MAILING DATE OF THIS COMMUNICATION.

- Extensions of time may be available under the provisions of 37 CFR 1.136(a). In no event, however, may a reply be timely filed after SIX (6) MONTHS from the mailing date of this communication.
- If NO period for reply is specified above, the maximum statutory period will apply and will expire SIX (6) MONTHS from the mailing date of this communication.
- Failure to reply within the set or extended period for reply will, by statute, cause the application to become ABANDONED (35 U.S.C. § 133). Any reply received by the Office later than three months after the mailing date of this communication, even if timely filed, may reduce any earned patent term adjustment. See 37 CFR 1.704(b).

Status

1)☐ Responsive to communication(s) filed on _____.

☐ A declaration(s)/affidavit(s) under **37 CFR 1.130(b)** was/were filed on _____.

2a)☐ This action is **FINAL**. 2b)☐ This action is non-final.

3)☐ An election was made by the applicant in response to a restriction requirement set forth during the interview on _____; the restriction requirement and election have been incorporated into this action.

4)☒ Since this application is in condition for allowance except for formal matters, prosecution as to the merits is closed in accordance with the practice under *Ex parte Quayle*, 1935 C.D. 11, 453 O.G. 213.

Disposition of Claims*

5)☒ Claim(s) *1-20* is/are pending in the application.

5a) Of the above claim(s) _____ is/are withdrawn from consideration.

6)☒ Claim(s) *1-4,6-9 and 16-20* is/are allowed.

7)☐ Claim(s) _____ is/are rejected.

8)☒ Claim(s) *5 and 10-15* is/are objected to.

9)☐ Claim(s) _____ are subject to restriction and/or election requirement.

* If any claims have been determined allowable, you may be eligible to benefit from the **Patent Prosecution Highway** program at a participating intellectual property office for the corresponding application. For more information, please see http://www.uspto.gov/patents/init_events/pph/index.jsp or send an inquiry to PPHfeedback@uspto.gov.

Application Papers

10)☐ The specification is objected to by the Examiner.

11)☐ The drawing(s) filed on _____ is/are: a)☐ accepted or b)☐ objected to by the Examiner.

Applicant may not request that any objection to the drawing(s) be held in abeyance. See 37 CFR 1.85(a).

Replacement drawing sheet(s) including the correction is required if the drawing(s) is objected to. See 37 CFR 1.121(d).

Priority under 35 U.S.C. § 119

12)☐ Acknowledgment is made of a claim for foreign priority under 35 U.S.C. § 119(a)-(d) or (f).

Certified copies:

a)☐ All b)☐ Some** c)☐ None of the:

1.☐ Certified copies of the priority documents have been received.

2.☐ Certified copies of the priority documents have been received in Application No. _____.

3.☐ Copies of the certified copies of the priority documents have been received in this National Stage application from the International Bureau (PCT Rule 17.2(a)).

** See the attached detailed Office action for a list of the certified copies not received.

Attachment(s)

1) ☒ Notice of References Cited (PTO-892)

2) ☐ Information Disclosure Statement(s) (PTO/SB/08a and/or PTO/SB/08b) Paper No(s)/Mail Date _____.

3) ☐ Interview Summary (PTO-413) Paper No(s)/Mail Date. _____ .

4) ☐ Other: _____.

Menard v. Signify
Menard Exhibit 1022
Page 062

DETAILED ACTION

This Office Action is in response to the Applicant's communication filed on 02/16/2017. In virtue of the communication:

Claims 1-20 are present in the instant application.

The present application, filed on or after March 16, 2013, is being examined under the first inventor to file provisions of the AIA.

Ex Parte Quayle

This application is in condition for allowance except for the following formal matters:

For the Claim(s):

In claim 5, line 1, "The luminaire of Claim 5" is in an improper dependency (it should be depended on claim 1).

In claim 10, line 10, "the first plurality is greater than the second plurality" should be changed to --the first plurality of states is greater than the second plurality of states--.

Appropriate correction is required.

Prosecution on the merits is closed in accordance with the practice under *Ex parte Quayle*, 25 USPQ 74, 453 O.G. 213, (Comm'r Pat. 1935).

A shortened statutory period for reply to this action is set to expire **TWO MONTHS** from the mailing date of this letter.

Allowable Subject Matter

Claims 1-20 would be allowable if corrected to overcome the objections as set forth above.

The primary reasons for the allowable subject matters of the claims are in the inclusion of the limitation(s):

"*... the controller configured to: power the first light source when the input is in the first state; power the second light source when the input is in the second state; power the first light source and the second light source when the input is in the third state; and power the first light source and the second light source when the input is in the fourth state*" and combination thereof, in the claim(s), i.e., claim 1, (claims 2-9 are allowed as being dependent on claim 1),

"*... a circuit that is connected to the first light emitting diode light, the second light emitting diode light source, and the input and that is operable to: map the first plurality of states into a second plurality of states, wherein the first plurality is greater than the second plurality; and control the first light emitting diode light source and the second light emitting diode light source according to the second plurality of states*" and combination thereof, in the claim(s), i.e., claim 10, (claims 11-15 are allowed as being dependent on claim 10), and

"*... wherein in the first long-term operating configuration, the first light source is active, the second light source is inactive, and the luminaire is configured to emit light of the first color temperature, wherein in the second long-term operating configuration, the first light source is inactive, the second light source is active, and the luminaire is configured to emit light of the second color temperature, and wherein in the third long-term operating configuration, the first light source is active, the second light source is active, and the luminaire is configured to emit light of a third color temperature that is between the first color temperature and the second color temperature*" and combination thereof, in the claim(s), i.e., claim 16, (claims 17-20 are allowed as being dependent on claim 16), which are not found in the prior art references.

The prior art made of record and relied upon is considered pertinent to applicant's disclosure. The best consider with this application can be filed in Wegh (U.S. Patent 8,172,415 B2).

Any comments considered necessary by applicant must be submitted no later than the payment of the issue fee and, to avoid processing delays, should preferably accompany the issue fee. Such submissions should be clearly labeled "Comments on Statement of Reasons for Allowance."

Inquiry

Any inquiry concerning this communication or earlier communications from the examiner should be directed to Jimmy T Vu whose telephone number is (571) 272-1832. The examiner can normally be reached on M - F: 9 - 6:00.

If attempts to reach the examiner by telephone are unsuccessful, the examiner's supervisor, Douglas Owens can be reached on (571) 272-1662. The fax phone numbers for the organization where this application or proceeding is assigned are (571) 273-8300.

Any inquiry of a general nature or relating to the status of this application or proceeding should be directed to the receptionist whose telephone number is (571) 272-2800.

/JIMMY VU/
Primary Examiner, Art Unit 2844

Notice of References Cited	Application/Control No. 15/435,141	Applicant(s)/Patent Under Reexamination PYSHOS ET AL.	
	Examiner JIMMY VU	Art Unit 2844	Page 1 of 1

U.S. PATENT DOCUMENTS

*		Document Number Country Code-Number-Kind Code	Date MM-YYYY	Name	CPC Classification	US Classification
*	A	US-8,172,415 B2	05-2012	Wegh; Rene Theodorus	F21S10/02	362/231
	B	US-				
	C	US-				
	D	US-				
	E	US-				
	F	US-				
	G	US-				
	H	US-				
	I	US-				
	J	US-				
	K	US-				
	L	US-				
	M	US-				

FOREIGN PATENT DOCUMENTS

*		Document Number Country Code-Number-Kind Code	Date MM-YYYY	Country	Name	CPC Classification
	N					
	O					
	P					
	Q					
	R					
	S					
	T					

NON-PATENT DOCUMENTS

*		Include as applicable: Author, Title Date, Publisher, Edition or Volume, Pertinent Pages)
	U	
	V	
	W	
	X	

*A copy of this reference is not being furnished with this Office action. (See MPEP § 707.05(a).)
Dates in MM-YYYY format are publication dates. Classifications may be US or foreign.

UNITED STATES PATENT AND TRADEMARK OFFICE

UNITED STATES DEPARTMENT OF COMMERCE
United States Patent and Trademark Office
Address: COMMISSIONER FOR PATENTS
P.O. Box 1450
Alexandria, Virginia 22313-1450
www.uspto.gov

BIB DATA SHEET

CONFIRMATION NO. 2406

SERIAL NUMBER	FILING or 371(c) DATE	CLASS	GROUP ART UNIT	ATTORNEY DOCKET NO.
15/435,141	02/16/2017 RULE	315	2844	13682.225908

APPLICANTS
Cooper Technologies Company, Houston, TX;

INVENTORS
Steven Walter Pyshos, Peachtree City, GA;
Raymond Janik, Fayetteville, GA;
Kevin Roy Harpenau, Atlanta, GA;

**** CONTINUING DATA ***************************
This appln claims benefit of 62/297,424 02/19/2016

**** FOREIGN APPLICATIONS ***************************

**** IF REQUIRED, FOREIGN FILING LICENSE GRANTED ****
02/24/2017

Foreign Priority claimed	35 USC 119(a-d) conditions met	Verified and Acknowledged	STATE OR COUNTRY	SHEETS DRAWINGS	TOTAL CLAIMS	INDEPENDENT CLAIMS
☐ Yes ☑ No	☐ Yes ☑ No	/JIMMY T VU/ (Examiner's Signature) ☐ Met after Allowance /JV/ (Initials)	GA	10	20	3

ADDRESS

King & Spalding LLP (Eaton/Cooper)
ATTN: IP Docketing Department
1100 Louisiana Street, Suite 4000
Houston, TX 77002-5213
UNITED STATES

TITLE

Configurable Lighting System

FILING FEE RECEIVED		
1600	FEES: Authority has been given in Paper No._____ to charge/credit DEPOSIT ACCOUNT No._____ for following:	☐ All Fees ☐ 1.16 Fees (Filing) ☐ 1.17 Fees (Processing Ext. of time) ☐ 1.18 Fees (Issue) ☐ Other _____ ☐ Credit

Index of Claims	Application/Control No.	Applicant(s)/Patent Under Reexamination
	15435141	PYSHOS ET AL.
	Examiner	**Art Unit**
	JIMMY VU	2844

✓	Rejected	-	Cancelled	N	Non-Elected	A	Appeal
=	Allowed	÷	Restricted	I	Interference	O	Objected

☐ Claims renumbered in the same order as presented by applicant ☐ CPA ☐ T.D. ☐ R.1.47

CLAIM		DATE								
Final	Original	07/10/2017								
	1	=								
	2	=								
	3	=								
	4	=								
	5	0								
	6	=								
	7	=								
	8	=								
	9	=								
	10	0								
	11	0								
	12	0								
	13	0								
	14	0								
	15	0								
	16	=								
	17	=								
	18	=								
	19	=								
	20	=								

EAST Search History

EAST Search History (Prior Art)

Ref #	Hits	Search Query	DBs	Default Operator	Plurals	Time Stamp
L1	0	15/435141	US-PGPUB; USPAT; USOCR; FPRS; EPO; JPO; DERWENT; IBM_TDB	OR	ON	2017/07/10 11:42
L2	42205	((light$3|lamp$1|LED$1|luminaire) and (input$4 with (set|setting|settable) with state$1)	US-PGPUB; USPAT; USOCR; FPRS; EPO; JPO; DERWENT; IBM_TDB	OR	ON	2017/07/10 11:56
L3	1544	2 and ((color|colour) with temperature)	US-PGPUB; USPAT; USOCR; FPRS; EPO; JPO; DERWENT; IBM_TDB	OR	ON	2017/07/10 11:58
L4	12	3 and (control$4 with light$3 with state$1 with first with second with third)	US-PGPUB; USPAT; USOCR; FPRS; EPO; JPO; DERWENT; IBM_TDB	OR	ON	2017/07/10 12:29
L5	40	("20040012027" | "20040257807" | "20050093430" | "20050156103" | "20050161586" | "20060068154" | "20060291226" | "20070024173" | "20070235639" | "20070291505" | "20080084706" | "20080224025" | "20080237540" | "20080246017" | "20090002986" | "20090290352" | "20100002414" | "20100172120" | "20110127557" | "20110128718" | "20110175546" | "20110176289" | "20110176316" | "3636341" | "5502626" | "5549844" | "5753918" | "5851428" | "6969843" | "7058103" | "7144131" | "7148632" | "7481553" | "7618157" | "7768192" | "7845825" | "7889421" | "8016470").PN. OR ("8517550").URPN.	US-PGPUB; USPAT; USOCR	OR	OFF	2017/07/10 12:34
L6	2	12/600511	US-PGPUB; USPAT; USOCR; FPRS; EPO; JPO; DERWENT; IBM_TDB	OR	ON	2017/07/10 12:36
L7	23	("20040165379" | "20050041424" | "20050236958" | "20060072314" | "20070090381" | "20100254115" | "20100290208" | "4416075" | "6357889" | "6759814" | "6776508" | "7025464" | "7040774" | "7131785" | "7144131" | "7145125" | "7213940" | "7374311").PN. OR ("8172415").URPN.	US-PGPUB; USPAT; USOCR	OR	OFF	2017/07/10 12:36
L8	277	("5317348" | "5351255" | "5614961" | "5700076" | "5715021" | "5792509" | "5793911" | "5813752" | "5813753" | "6031343" | "6046720" | "6068383" | "6149283" | "6234648").PN. OR ("6357889").URPN.	US-PGPUB; USPAT; USOCR	OR	OFF	2017/07/10 12:38
L9	1	8 and (control$4 with light$3 with state$1 with first with second with third)	US-PGPUB; USPAT; USOCR; FPRS; EPO; JPO; DERWENT; IBM_TDB	OR	ON	2017/07/10 12:39
L10	27719	((light$3|lamp$1|LED$1|luminaire) and (control$4 with light$3 with state$1 with (switch$3|tun$4))	US-PGPUB; USPAT; USOCR; FPRS; EPO; JPO; DERWENT; IBM_TDB	OR	ON	2017/07/10 12:41
L11	3876	((light$3|lamp$1|LED$1|luminaire) and (control$4 with light$3 with state$1 with (switch$3|tun$4) with input$4)	US-PGPUB; USPAT; USOCR;	OR	ON	2017/07/10 12:42

			FPRS; EPO; JPO; DERWENT; IBM_TDB			
L12	458	11 and ((color|colour) with differen$3)	US-PGPUB; USPAT; USOCR; FPRS; EPO; JPO; DERWENT; IBM_TDB	OR	ON	2017/07/10 12:43
L13	37	12 and 315/151,185R,209R,291,294,307,308,312.ccls.	US-PGPUB; USPAT; USOCR; FPRS; EPO; JPO; DERWENT; IBM_TDB	OR	ON	2017/07/10 12:44
L14	1	(light$3 with state$1 with select$4 with input$4) and (control$4 with dual with pin with switch$3)	US-PGPUB; USPAT; USOCR; FPRS; EPO; JPO; DERWENT; IBM_TDB	OR	ON	2017/07/10 12:58
L15	0	(light$3 with state$1 with select$4 with input$4) and (dual with inline with pin with switch$3)	US-PGPUB; USPAT; USOCR; FPRS; EPO; JPO; DERWENT; IBM_TDB	OR	ON	2017/07/10 12:59
L16	28	(light$3|lamp$1|LED$1|luminaire) and (dual with inline with pin with switch$3)	US-PGPUB; USPAT; USOCR; FPRS; EPO; JPO; DERWENT; IBM_TDB	OR	ON	2017/07/10 12:59
L17	99934	(light$3|lamp$1|LED$1|luminaire) and (control with (state$1|channel$3) with input$4)	US-PGPUB; USPAT; USOCR; FPRS; EPO; JPO; DERWENT; IBM_TDB	OR	ON	2017/07/10 13:02
L18	67	17 and (dual with pin with switch$3)	US-PGPUB; USPAT; USOCR; FPRS; EPO; JPO; DERWENT; IBM_TDB	OR	ON	2017/07/10 13:03
L19	4	18 and 315/151,185R,209R,291,294,307,308,312.ccls.	US-PGPUB; USPAT; USOCR; FPRS; EPO; JPO; DERWENT; IBM_TDB	OR	ON	2017/07/10 13:03
L20	136227	(H05B37/02|H05B33/08|H05B33/0845|H05B33/0863|F21K9/62|F21S8/026|F21V3/02|F21V5/04|F21V7/00|F21V17/12|F21V21/088|F21V23/001|F21Y2113/13|F21Y2115/10).cpc.	US-PGPUB; USPAT; USOCR; FPRS; EPO; JPO; DERWENT; IBM_TDB	OR	ON	2017/07/10 13:07
L21	1346	20 and (light$3|lamp$1|LED$1|luminaire) and (control with (state$1|channel$3) with input$4)	US-PGPUB; USPAT; USOCR; FPRS; EPO; JPO; DERWENT; IBM_TDB	OR	ON	2017/07/10 13:07
L22	0	21 and (dual with pin with switch$3)	US-PGPUB; USPAT; USOCR;	OR	ON	2017/07/10 13:08

Menard v. Signify
Menard Exhibit 1022
Page 070

			FPRS; EPO; JPO; DERWENT; IBM_TDB			
L23	442	21 and (input$4 with (set$4|settable) with control$4)	US-PGPUB; USPAT; USOCR; FPRS; EPO; JPO; DERWENT; IBM_TDB	OR	ON	2017/07/10 13:09
L24	47	21 and (input$4 with (set$4|settable) with (color|colour))	US-PGPUB; USPAT; USOCR; FPRS; EPO; JPO; DERWENT; IBM_TDB	OR	ON	2017/07/10 13:09
L25	25	(("PYSHOS") near3 ("Steven")).INV.	US-PGPUB; USPAT; USOCR	OR	OFF	2017/07/10 13:13
L26	22	(("JANIK") near3 ("Raymond")).INV.	US-PGPUB; USPAT; USOCR	OR	OFF	2017/07/10 13:26
L27	30	(("HARPENAU") near3 ("Kevin")).INV.	US-PGPUB; USPAT; USOCR	OR	OFF	2017/07/10 13:26

EAST Search History (Interference)

<This search history is empty>

7/10/2017 1:39:28 PM
C:\Users\jvu\Documents\EAST\Workspaces\5435141.wsp

Search Notes	Application/Control No.	Applicant(s)/Patent Under Reexamination
	15435141	PYSHOS ET AL.
	Examiner	**Art Unit**
	JIMMY VU	2844

CPC- SEARCHED		
Symbol	**Date**	**Examiner**
H05B37/02|H05B33/08|H05B33/0845|H05B33/0863|F21K9/62|F21S8/026|F21V3/02|F21V5/04|F21V7/00|F21V17/12|F21V21/088|F21V23/001|F21Y2113/13|F21Y2115/10	7/10/17	JV

CPC COMBINATION SETS - SEARCHED		
Symbol	**Date**	**Examiner**

US CLASSIFICATION SEARCHED			
Class	**Subclass**	**Date**	**Examiner**
315	151,185R,209R,291,294,307,308,312	7/10/17	JV

SEARCH NOTES		
Search Notes	**Date**	**Examiner**
Class/subclass, Text, Inventor name, Back/Forward search	7/10/17	JV

INTERFERENCE SEARCH			
US Class/ CPC Symbol	**US Subclass / CPC Group**	**Date**	**Examiner**

Menard v. Signify
Menard Exhibit 1022
Page 072

UNITED STATES PATENT AND TRADEMARK OFFICE

UNITED STATES DEPARTMENT OF COMMERCE
United States Patent and Trademark Office
Address: COMMISSIONER FOR PATENTS
P.O. Box 1450
Alexandria, Virginia 22313-1450
www.uspto.gov

APPLICATION NUMBER	FILING OR 371(C) DATE	FIRST NAMED APPLICANT	ATTY. DOCKET NO./TITLE
15/435,141	02/16/2017	Steven Walter Pyshos	13682.225908

CONFIRMATION NO. 2406

91764
King & Spalding LLP (Eaton/Cooper)
ATTN: IP Docketing Department
1100 Louisiana Street, Suite 4000
Houston, TX 77002-5213

NONPUBLICATION RESCISSION LETTER

OC000000092727534

Date Mailed: 07/17/2017

Communication Regarding Rescission Of Nonpublication Request and/or Notice of Foreign Filing

Applicant's rescission of the previously-filed nonpublication request and/or notice of foreign filing is acknowledged. The paper has been reflected in the Patent and Trademark Office's (USPTO's) computer records so that the earliest possible projected publication date can be assigned.

The projected publication date is 10/19/2017.

If applicant rescinded the nonpublication request before or on the date of "foreign filing,"[1] then no notice of foreign filing is required.

If applicant foreign filed the application after filing the above application and before filing the rescission, and the rescission did not also include a notice of foreign filing, then a notice of foreign filing (not merely a rescission) is required to be filed within 45 days of the date of foreign filing. See 35 U.S.C. § 122(b)(2)(B)(iii), and Clarification of the United States Patent and Trademark Office's Interpretation of the Provisions of 35 U.S.C. § 122(b)(2)(B)(ii)-(iv), 1272 Off. Gaz. Pat. Office 22 (July 1, 2003).

If a notice of foreign filing is required and is not filed within 45 days of the date of foreign filing, then the application becomes abandoned pursuant to 35 U.S.C. § 122(b)(2)(B)(iii). In this situation, applicant should either file a petition to revive or notify the Office that the application is abandoned. See 37 CFR 1.137(f). Any such petition to revive will be forwarded to the Office of Petitions for a decision. Note that the filing of the petition will not operate to stay any period of reply that may be running against the application.

Questions regarding petitions to revive should be directed to the Office of Petitions at (571) 272-3282.

[1] Note, for purpose of this notice, that "foreign filing" means "filing an application directed to the same invention in another country, or under a multilateral international agreement, that requires publication of applications 18 months after filing".

Questions about the contents of this notice and the requirements it sets forth should be directed to the Office of Data Management, Application Assistance Unit, at **(571) 272-4000** or **(571) 272-4200** or **1-888-786-0101**.

/lqchau/

Patents

IN THE UNITED STATES PATENT AND TRADEMARK OFFICE

In re Application of: **Steven Walter Pyshos et al.**	)	Group Art Unit: **2844**
Application No.: **15/435,141**	)	Confirmation No.: **2406**
Filed: **February 16, 2017**	)	Examiner: **Jimmy T. Vu**
Title: **Configurable Lighting System**	)	Attorney Docket No.: **13682.225908**

RESPONSE TO NON-FINAL OFFICE ACTION

Mail Stop Amendment
Commissioner for Patents
P.O. Box 1450
Alexandria, VA 22313-1450

Sir:

In Response to the Office Action dated July 14, 2017, please enter and consider the following amendments and remarks.

- **Amendments to the specification** begin on page 2 of this paper;
- **Claim amendments** begin on page 3 of this paper; and
- **Remarks** follow the claim amendments.

I hereby certify that this correspondence is electronically filed via EFS-WEB with the Commissioner for Patents, P.O. Box 1450, Alexandria, VA 22313-1450, on August 8, 2017.

/ Robert T. Neufeld /
Robert T. Neufeld, Reg. No. 48,394

DMSLIBRARY01\30937193.v1

AMENDMENTS TO THE SPECIFICATION

Please replace the specification with the attached amended specification, provided in clean and marked form. The amended specification corrects minor errors in the original specification. No new matter is presented with the amended specification.

CLAIM AMENDMENTS

Please amend the claims as follows.

1. (Original) A luminaire comprising:

an input settable in a first, a second, a third, and a fourth state;

a first light source having a first color temperature;

a second light source having a second color temperature; and

a controller connected to the input, the first light source, and the second light source, the controller configured to:

power the first light source when the input is in the first state;

power the second light source when the input is in the second state;

power the first light source and the second light source when the input is in the third state; and

power the first light source and the second light source when the input is in the fourth state.

2. (Original) The luminaire of Claim 1, wherein the input comprises a first switch and a second switch.

3. (Original) The luminaire of Claim 2, wherein the first state comprises the first switch off and the second switch off,

wherein the second state comprises the first switch on and the second switch on,

wherein the third state comprises the first switch on and the second switch off, and

wherein the fourth state comprises the first switch off and the second switch on.

4. (Original) The luminaire of Claim 3, wherein when the input is set to the first state, the luminaire emits light of the first color temperature,

wherein when the input is set to the second state, the luminaire emits light of the second color temperature,

wherein when the input is set to the third state, the luminaire emits light of a third color temperature that is between the first color temperature and the second color temperature, and

wherein when the input is set to the fourth state, the luminaire emits light of the third color temperature.

5. (Currently Amended) The luminaire of Claim 1 [[5]], wherein the first light source comprises a first light emitting diode,

wherein the second light source comprises a second light emitting diode, and

wherein the first color temperature is separated from the second color temperature by no less than 500 ~~degrees~~ Kelvin.

6. (Original) The luminaire of Claim 1, wherein the first light source comprises a first bank of light emitting diodes, and

wherein the second light source comprises a second bank of light emitting diodes.

7. (Original) The luminaire of Claim 1, wherein the controller comprises digital logic,

wherein the input comprises a dual inline pin (DIP) switch mounted on a circuit board, and

wherein a first configuration of the DIP switch defines the first state, a second configuration of the DIP switch defines the second state, a third configuration of the DIP switch defines the third state, and a fourth configuration of the DIP switch defines the fourth state.

8. (Original) The luminaire of Claim 1, further comprising a housing that encloses the first light source, the second light source, the input, and the controller, the housing comprising:

a first aperture that provides access to the input for setting the input manually to the first state, the second state, the third state, or the fourth state during luminaire installation; and

a cover covering the aperture and comprising a second aperture that is sized to receive an electrical cable for powering the luminaire.

9. (Original) The luminaire of Claim 8, wherein the input comprises a dual inline pin (DIP) switch mounted to the housing adjacent the first aperture, and

wherein the cover further comprises:

a first notch that is disposed on a first side of the cover and that is sized to receive a first fastener for fastening the cover to the housing; and

a second notch that is disposed on a second side of the cover and that is sized to receive a second fastener for fastening the cover to the housing,

wherein the first notch and the second notch are oriented so that the cover is rotatable about the first fastener when the first fastener is loosely disposed in the first notch, with the second fastener disposable in the second notch during said rotation of the cover.

10. (Currently Amended) A luminaire comprising:

a first light emitting diode light source configured to produce illumination of a first color temperature;

a second light emitting diode light source configured to produce illumination of a second color temperature that is different than the first color temperature;

an input settable in a first plurality of states; and

a circuit that is connected to the first light emitting diode light, the second light emitting diode light source, and the input and that is operable to:

map the first plurality of states into a second plurality of states, wherein the first plurality <u>of states</u> is greater than the second plurality <u>of states</u>; and

control the first light emitting diode light source and the second light emitting diode light source according to the second plurality of states.

11. (Original) The luminaire of Claim 10, wherein mapping the first plurality of states into the second plurality of states comprises producing one state in the second plurality of states for each of two states in the first plurality of states.

12. (Original) The luminaire of Claim 10, wherein the first plurality of states comprises a first state and a second state,

wherein the second plurality of states comprises a third state, and

wherein mapping the first plurality of states into the second plurality of states comprises mapping the first state and the second state into the third state.

13. (Original) The luminaire of Claim 12, wherein in the first state, the luminaire produces illumination of the first color temperature using the first light emitting diode light source,

wherein in the second state, the luminaire produces illumination of the second color temperature using the second light emitting diode light source,

wherein in the third state, the luminaire produces illumination of the third color temperature using the first light emitting diode light source and the second light emitting diode light source, and

wherein the third color temperature is between the first color temperature and the second color temperature.

14. (Original) The luminaire of Claim 10, wherein the input comprises a dual inline pin (DIP) switch,

wherein the luminaire further comprising a housing that encloses the first light emitting diode light source, the second light emitting diode light source, the DIP switch, and the circuit,

wherein the housing comprises:

a first aperture that provides access to the DIP switch for state selection during luminaire installation, and

a cover configured for covering the aperture.

15. (Original) The luminaire of Claim 10, wherein the first light emitting diode light source comprises at least two light emitting diodes,

wherein the second light emitting diode light source comprises at least two other light emitting diodes,

wherein the circuit comprises:

digital logic; and

a light emitting diode driver that is controlled by the digital logic,

wherein there are four states in the first plurality of states,

wherein there are three states in the second plurality of states, and

wherein the three states correspond to three different color temperatures of illumination produced by the luminaire.

16. (Original) A luminaire comprising:

a housing comprising an aperture;

a lens disposed at the aperture;

a first light source and a second light source that are mounted in the housing and that are oriented to emit light through the aperture and the lens for area illumination, wherein the first light source has a first color temperature and the second light source has a second color temperature; and

switches that are mounted at the housing and that are operable to configure the luminaire in a first long-term operating configuration, a second long-term operating configuration, and a third long-term operating configuration,

wherein in the first long-term operating configuration, the first light source is active, the second light source is inactive, and the luminaire is configured to emit light of the first color temperature,

wherein in the second long-term operating configuration, the first light source is inactive, the second light source is active, and the luminaire is configured to emit light of the second color temperature, and

wherein in the third long-term operating configuration, the first light source is active, the second light source is active, and the luminaire is configured to emit light of a third color temperature that is between the first color temperature and the second color temperature.

17. (Original) The luminaire of Claim 16, wherein the switches have two switch states that each produces the third long-term operating configuration.

18. (Original) The luminaire of Claim 16, wherein the first light source comprises at least one light emitting diode, and

wherein the second light source comprises at least one other light emitting diode.

19. (Original) The luminaire of Claim 18, wherein the luminaire is configured for mounting to a ceiling,

wherein the housing further comprises a cover sized to cover the aperture, and

wherein the switches are disposed in the housing adjacent the aperture for access during luminaire installation.

20. (Original) The luminaire of Claim 19, wherein the switches comprise a dual inline pin (DIP) switch.

REMARKS

Reconsideration of the present application is respectfully requested in view of the following remarks.

I. Status of the Claims

Claims 1-20 are pending, with Claim 1, 10, and 16 being independent. Applicant presents amendments to the claims to address the minor informalities identified in the Office Action. Applicant also presents amendments to the specification to address minor informalities. A clean and marked version of the amended specification are provided with this Response. No new matter is presented with the amendments to the claims and the specification. All of the Applicant's amendments are without prejudice or disclaimer.

CONCLUSION

The Applicant submits the foregoing as a full and complete response to the Office Action. The Applicant submits that this response places the present application into condition for allowance and respectfully requests such action. If any issues exist that can be resolved with an Examiner's Amendment or a telephone conference, the Examiner is requested to please contact the Applicant's undersigned representative at 404.572.3505.

Respectfully submitted,

/ Robert T. Neufeld /

Robert T. Neufeld
Reg. No. 48,394

King & Spalding LLP
34th Floor
1180 Peachtree Street, N.E.
Atlanta, Georgia 30309-3521
404.572.4600
Docket No. 13682.225908

CONFIGURABLE LIGHTING SYSTEM

CROSS REFERENCE TO RELATED APPLICATIONS

This application claims priority to U.S. Provisional Patent Application Number 62/297,424 filed February 19, 2016 in the name of Steven Walter Pyshos and Raymond Janik and entitled "Configurable Lighting System," the entire contents of which are hereby incorporated herein by reference.

TECHNICAL FIELD

Embodiments of the technology relate generally to lighting systems and more specifically to lighting systems that can be readily configured to produce illumination of different color temperatures.

BACKGROUND

For illumination applications, light emitting diodes (LEDs) offer substantial potential benefit associated with their energy efficiency, light quality, and compact size. However, to realize the full potential benefits offered by light emitting diodes, new technologies are needed.

With luminaires that incorporate incandescent or fluorescent technology, some flexibility can be obtained by swapping lamps to meet user preferences. In such luminaires, lamp selection can provide flexibility in terms of correlated color temperature (CCT or color temperature) and light output (lumen output). For example, a compact fluorescent downlight might accept 6-, 32-, and 42-watt lamps in 2700, 3000, and 3500 K CCT. Additionally, changing lamp position and focal point in a reflector of an incandescent or fluorescent fixture can change the fixture spacing criteria (SC) of a luminaire.

In contrast, conventional light-emitting-diode-based luminaires typically offer reduced flexibility when the luminaire's light-emitting-diode-based light source is permanently attached to the luminaire. Stocking conventional light-emitting-diode-based luminaires at distribution to accommodate multiple configurations that users may desire can entail maintaining a relatively large or cumbersome inventory.

Need is apparent for a technology to provide a light emitting diode system that can adapt to various applications, for example by delivering multiple color temperatures, multiple lumens, and/or multiple photometric distributions. Need further exists for a capability to enable a single luminaire to be stocked at distribution and then quickly configured according to application parameters and deployment dictates. Need further exists for luminaires that are both energy efficient and flexible. A capability addressing one or more such needs, or some other related deficiency in the art, would support improved illumination systems and more widespread utilization of light emitting diodes in lighting applications.

SUMMARY

In some aspects of the disclosure, a system can configure a luminaire for providing illumination of a selected color temperature, a selected lumen output, or a selected photometric distribution based on an input. The input may be field selectable or may be selectable at a distribution center or at a late stage of luminaire manufacture, for example.

In some aspects of the disclosure, the luminaire can comprise at least two light sources having different color temperatures. In a first configuration, the luminaire can produce illumination of a first color temperature using a first one of the light sources. In a second configuration, the luminaire can produce illumination of a second color temperature using a second one of the light sources. In a third configuration, the luminaire can produce illumination of a third color temperature using both of the first and second the light sources. The third color temperature may be between the first and second color temperatures. The value of the third color temperature within a range between the first and second color temperatures can be controlled by manipulating the

Menard v. Signify
Menard Exhibit 1022
Page 086

relative amounts of light output by the first and second light sources. That is, adjusting the lumen outputs of the first and second light sources can define the color temperature of the illumination produced by the luminaire in the third configuration.

In some aspects of the disclosure, the luminaire can comprise at least two light sources having different lumen outputs. In a first configuration, the luminaire can produce illumination of a first lumen output using a first one of the light sources. In a second configuration, the luminaire can produce illumination of a second lumen output using a second one of the light sources. In a third configuration, the luminaire can produce illumination of a third lumen output using both of the first and second light sources.

In some aspects of the disclosure, the luminaire can comprise at least two light sources having different photometric distributions. In a first configuration, the luminaire can produce illumination of a first photometric distribution using a first one of the light sources. In a second configuration, the luminaire can produce illumination of a second photometric distribution using a second one of the light sources. In a third configuration, the luminaire can produce illumination of a third photometric distribution using both of the first and second light sources.

In some aspects of the disclosure, a circuit and an associated input to the circuit can configure a luminaire for providing illumination having a selected property, for example a selected color temperature, a selected lumen output, or a selected photometric distribution. The input can be settable to a first number of states. The circuit can map the first number of states into a second number of states that is less than the first number of states. For example, the input can have four states and the circuit can map these four states into three states. The three states can correspond to three different values of the illumination property, for example three different color temperatures, three different lumen outputs, or three different photometric distributions.

The foregoing discussion of controlling illumination is for illustrative purposes only. Various aspects of the present disclosure may be more clearly understood and appreciated from a review of the following text and by reference to the associated drawings and the claims that follow. Other aspects, systems, methods, features,

Menard v. Signify
Menard Exhibit 1022
Page 087

advantages, and objects of the present disclosure will become apparent to one with skill in the art upon examination of the following drawings and text. It is intended that all such aspects, systems, methods, features, advantages, and objects are to be included within this description and covered by this application and by the appended claims of the application.

BRIEF DESCRIPTION OF THE DRAWINGS

Figures 1A, 1B, 1C, 1D, 1E, 1F, 1G, 1H, 1I, 1J, and 1K (collectively Figure 1) illustrate views of a luminaire in accordance with some example embodiments of the disclosure.

Figure 2 illustrates a functional block diagram of a circuit that a luminaire can comprise in accordance with some example embodiments of the disclosure.

Figure 3 illustrates a state table for a circuit that a luminaire can comprise in accordance with some example embodiments of the disclosure.

Figure 4 illustrates a schematic of a circuit that a luminaire can comprise in accordance with some example embodiments of the disclosure.

Many aspects of the disclosure can be better understood with reference to the above drawings. The drawings illustrate only example embodiments and are therefore not to be considered limiting of the embodiments described, as other equally effective embodiments are within the scope and spirit of this disclosure. The elements and features shown in the drawings are not necessarily drawn to scale, emphasis instead being placed upon clearly illustrating principles of the embodiments. Additionally, certain dimensions or positionings may be exaggerated to help visually convey certain principles. In the drawings, similar reference numerals among different figures designate like or corresponding, but not necessarily identical, elements.

Menard v. Signify
Menard Exhibit 1022
Page 088

DESCRIPTION OF EXAMPLE EMBODIMENTS

In some example embodiments of the disclosure, a luminaire can comprise multiple groups of light emitting diodes of different color temperatures and a constant current power supply for powering the light emitting diodes. The power supply can utilize a switching scheme that can turn each group of light emitting diodes on and off to change the color temperature of the luminaire. In some example embodiments, the power supply can further vary the relative intensities of the light emitting diodes to manipulate the color temperature of the luminaire within a range.

For example, the luminaire can comprise a 3,000 K group of light emitting diodes and a 4,000 K group of light emitting diodes. When only the 3,000 K group is on, the luminaire can deliver 3,000 K illumination. When only the 4,000 K group is on, the luminaire can deliver 4,000 K illumination. When the 3,000 K group and the 4,000 K group are both on, the luminaire can deliver 3,500 K illumination. If the 4,000 K group of light emitting diodes is concurrently operated at a low lumen output and the 3,000 K group is operated at a high lumen output, the luminaire may deliver illumination of another selected color temperature, for example 3,100 K.

In some example embodiments, a controller can adjust lumen output automatically to maintain constant delivered lumens across multiple color temperatures or to suit application requirements. The controller implements the adjustment utilizing programmable driver current and/or via turning on and off various groups of light emitting diodes. Configurable color temperature or lumen output can function in combination with integral dimming, for example to facilitate interface with building automation, sensors, and dimmers.

In some example embodiments, luminaires can achieve an additional level of flexible configuration at a distribution center using interchangeable optics. For example, primary optics can provide medium distribution (e.g. spacing criteria equals 1.0), while a diffuser or concentrator lens can be used to achieve wide distribution (e.g. spacing criteria equals 1.4), and narrow distribution (e.g. spacing criteria equals 0.4).

In some example embodiments, a luminaire's configuration of delivered lumens and color temperatures can be set at the factory, at distribution, or in the field. To meet

Menard v. Signify
Menard Exhibit 1022
Page 089

current and emerging code compliance, performance markings on a luminaire can indicate and correspond to the desired setting. Economical, field-installed nameplates can identify the various electrical and optical performance ratings and, when installed, permanently program the delivered lumens and color temperature. Other settings, such as dimming protocols, can likewise be configured. The interface between the nameplate and internal logic can use mechanical, electrical or optical means, for example.

Accordingly, in some embodiments of the disclosure, the technology provides product markings and supports regulatory compliance. For example, nameplates can indicate energy codes and rebate opportunities, for compliance with product labeling and to facilitate compliance confirmation by local authorities who may have jurisdiction.

Some representative embodiments will be further described hereinafter with example reference to the accompanying drawings that describe representative embodiments of the present technology. In the drawings, Figure 1 illustrates views of a representative luminaire 100; Figure 2 illustrates a functional block diagram of a representative circuit 200 that the luminaire 100 can comprise; Figure 3 illustrates a representative state table for the circuit 200; and Figure 4 illustrates a representative schematic for the circuit 200. The technology may, however, be embodied in many different forms and should not be construed as limited to the embodiments set forth herein; rather, these embodiments are provided so that this disclosure will be thorough and complete, and will fully convey the scope of the technology to those appropriately skilled in the art.

Referring now to Figure 1, multiple views of the luminaire 100 are shown. Figure 1A illustrates a side perspective view of the luminaire 100. Figure 1B illustrates a top perspective view of the luminaire 100. Figure 1C illustrates a view of the light-emitting bottom of the luminaire 100, showing a lens 120 in a light-emitting aperture 115 of the luminaire 100. Figure 1D illustrates a view of the light-emitting bottom of the luminaire 100 with the lens 120 removed from the light-emitting aperture 115 of the luminaire. Figure 1E illustrates a view of the light-emitting bottom of the luminaire 100 with the lens 120 and an associated reflector 130 removed from the light-emitting aperture 115 of the luminaire. Figure 1F illustrates a cutaway perspective view of the luminaire 100.

Figure 1G illustrates another cutaway perspective view of the luminaire 100. Figure 1H illustrates another cutaway view of the luminaire 100. Figures 1I, 1J, and 1K provide detailed views of a portion of the luminaire 100 comprising a cover 126 and an associated access aperture 129 for providing internal access to the luminaire 100. In Figure 1I, the cover 126 is fully removed. In Figure 1J, the cover 126 is positioned adjacent the access aperture 129, for example in connection with attachment or removal of the cover 126. In Figure 1K, the cover 126 is attached to the luminaire 100.

As best seen in the views of Figures 1A and 1B, the illustrated example luminaire 100 is suited for inserting in an aperture in a ceiling to provide overhead lighting. In this example embodiment, the luminaire 100 can be characterized as an overhead light or a recessed ceiling light. Various other indoor and outdoor luminaires that may be mounted in a wide range of orientations can be substituted for the luminaire 100 illustrated in Figure 1.

The illustrated example luminaire 100 of Figure 1 comprises a housing 105 that is circular with a protruding rim 110 that extends circumferentially about the housing 105. When the luminaire 100 is installed in a ceiling aperture, the rim 100 circumscribes and covers the edge of the ceiling aperture for aesthetics, for support, and for blocking of debris from above the ceiling. Hanger clips 102 hold the luminaire 100 in place in installation.

As best illustrated in Figures 1I, 1J, and 1K, the example luminaire 100 comprises an access aperture 129 and an associated cover 126. The access aperture 129 provides access to the interior of the luminaire housing 105, for example in the field and/or during luminaire installation. An installer can remove the cover 126 and manually set a dual inline pin (DIP) switch 131 to configure the luminaire 100 for long-term operation providing illumination with a selected color temperature, a selected lumen output, and/or a selected photometric distribution. As illustrated, the dual inline pin switch 131 is mounted on a circuit board adjacent the access aperture 129, thereby facilitating convenient and efficient access in the field or at a distribution center, for example.

An electrical cable 127 extends through a wiring aperture 103 in the cover 126. The electrical cable 127 terminates in a plug 132 that mates with a receptacle 133 that is

mounted inside the housing 105 adjacent the access aperture 129 for convenient field access.

As illustrated, the example cover 126 comprises two notches 123, 124 that each receives a respective screw 128 for holding the cover 126 in place. The notch 123 is disposed on the right side of the cover 126 and is sized to receive one of the screws 128. Meanwhile, the notch 124 is disposed on a left side of the cover 126 and is sized to receive the other screw 128.

The left notch 124 and the right notch 123 are oriented so that the cover 126 is rotatable about the right screw 128 when the right screw 128 is loosely disposed in the right notch 123. In other words, cover rotation can occur when the right screw 128 is in the right notch 123 with threads engaged but prior to tightening. In this position, the cover 126 can rotate clockwise about the right screw 128. Thus, the right screw 128 provides an axis of rotation for the cover 126. This clockwise rotation facilitates convenient manipulation of the cover 126 by a person working the cover 126 to cover the access aperture 129, with the screws 128 engaged but not fully tightened. The clockwise rotation of the cover 126 about the right screw 128 provides the person with a capability to slide the left notch 124 of the cover 126 conveniently under the head of the left screw 128. Once the cover 126 is rotated so the left notch 124 is under the head of the left screw 128, the person (for example an installer) can tighten the two screws 128 to secure the cover 126.

To remove the cover 126, the person loosens the two screws 128 and then rotates the cover 126 counterclockwise about the right screw 128 so that the left notch 124 moves out from under the head of the left screw 128. Once the left notch 124 is free from the left screw 128, the installer can pull the right notch 123 out from under the right screw 128 to fully remove the cover 126.

As best seen in the views of Figures 1A, 1C, 1F, and 1G, the lens 120 of the luminaire 100 is positioned adjacent the lower, exit side of the light-emitting aperture 115. As illustrated, the lens 120 can mix and blend light emitted by two groups of light emitting diodes 150, 155, with each group having a different color temperature. In some embodiments, the two groups of light emitting diodes 150, 155 may have color

Menard v. Signify
Menard Exhibit 1022
Page 092

temperatures that differ by at least 500 Kelvin, for example. The group of light emitting diodes 150 can be characterized as one light emitting diode light source, while the group of light emitting diodes 155 can be characterized as another light emitting diode light source. Other embodiments of a light emitting diode light source may have a single light emitting diode or more light emitting diodes than the embodiment illustrated in Figure 1. A reflector 130 is disposed in and lines the aperture 115 to guide and manage the emitted light between the light emitting diodes 150, 155 and the lens 120. In some embodiments, an upper lens (not illustrated) replaces the reflector 130.

The light emitting diodes 150, 155 are mounted on a substrate 125, for example a circuit board, and form part of a circuit 200. In the illustrated embodiment, the light emitting diodes 150, 155 are interspersed. In other embodiments, the light emitting diodes 150, 155 may be separated from one another or spatially segregated according to color temperature or other appropriate parameter. As discussed in further detail below, the circuit 200 supplies electricity to the light emitting diodes 150, 155 with a level of flexibility that facilitates multiple configurations suited to different applications and installation parameters.

Turning to Figures 2, 3, and 4, some example embodiments of the circuit 200 will be discussed in further detail with example reference to the luminaire 100. The circuit 200 can be applied to other indoor and outdoor luminaires.

Referring now to Figure 2, this figure illustrates an embodiment of the circuit 200 in an example block diagram form. The circuit 200 comprises a DC power supply 205 for supplying electrical energy that the circuit 200 delivers to the light emitting diodes 150, 155. In an example embodiment, the circuit 200 comprises a light emitting diode driver.

The dual inline pin switch 131 comprises individual switches 210 that provide an input for configuring the luminaire 100 to operate at a selected color temperature. In the illustrated embodiment, the circuit 200 comprises two manual switches 210. Other embodiments may have fewer or more switches 210. In various embodiments, the switches 210 can be mounted to the housing 105 of the luminaire 100, for example within the housing 105 (as illustrated in Figure 1 and discussed above) or on an exterior surface

Menard v. Signify
Menard Exhibit 1022
Page 093

of the housing 105. In some embodiments, the switches 210 are mounted on the substrate 125. In some embodiments, the switches 210 are implemented via firmware or may be solid state.

As an alternative to the illustrated dual inline pin switch 131, the input can comprise multiple DIP switches, one or more single in-line pin packages (SIP or SIPP), one or more rocker switches, one or more reed switches, one or more magnetic switches, one or more rotary switches, one or more rotary dials, one or more selectors or selector switches, one or more slide switches, one or more snap switches, one or more thumbwheels, one or more toggles or toggle switches, one or more keys or keypads, or one or more buttons or pushbuttons, to mention a few representative examples without limitation.

As further discussed below, a controller 215 operates the light emitting diodes 150, 155 according to state of the switches 210. In some example embodiments, the controller 215 comprises logic implemented in digital circuitry, for example discrete digital components or integrated circuitry. In some example embodiments, the controller 215 utilizes microprocessor-implemented logic with instructions stored in firmware or other static or non-transitory memory.

In the illustrated embodiment, the outputs of the controller 215 are connected to two MOSFET transistors 160 to control electrical flow through two light emitting diodes 150, 155. The illustrated MOSFET transistors 160 provide one example and can be replaced with other appropriate current control devices or circuits in various embodiments. The switches 210 thus configure the luminaire 100 to operate with either or both of the light emitting diodes 150, 155. The light emitting diodes 150, 155 illustrated in Figure 2 may represent two single light emitting diodes or two groups of light emitting diodes, for example.

Figure 3 illustrates a representative table 300 describing operation of the circuit 100 according to some example embodiments. In the example of Figure 3, the light emitting diode 150 produces light having a color temperature of 3,000 Kelvin, and the light emitting diode 155 produces light having a color temperature of 4,000 Kelvin.

Menard v. Signify
Menard Exhibit 1022
Page 094

As shown in the example table 300, when both of the switches 210 are in the on state, the controller 215 causes the light emitting diode 155 to be off and the light emitting diode 150 to be on. Accordingly, the luminaire 100 emits illumination having a color temperature of 3,000 Kelvin.

When both of the switches 210 are in the off state, the controller 215 causes the light emitting diode 155 to be on and the light emitting diode 150 to be off. Accordingly, the luminaire 100 emits illumination having a color temperature of 4,000 Kelvin.

When one of the switches 210 is in the off state and the other of the switches 210 is on the on state, the controller 215 causes the light emitting diode 155 to be on and the light emitting diode 150 to be on. The luminaire 100 thus emits illumination having a color temperature of 3,500 Kelvin. In some other example embodiments, the controller 215 can adjust the light output of one or both of the light emitting diodes 150, 155 to set the color temperature to a specific value with the range of 3,000 to 4,000 Kelvin.

Accordingly, the controller 215 maps the four configurations of the two switches 210 to three states for configuring the two light emitting diodes 150, 155 for permanent or long-term operation. Mapping two switch configurations to a single mode of long-term operation can simplify configuration instructions and reduce errors during field configuration. The resulting configurations support multiple color temperatures of illumination from a single luminaire 100.

Some example embodiments support fewer or more than three states of illumination. For example, in one embodiment, the luminaire 100 comprises three strings of light emitting diodes 150 that have different color temperatures, such as 3,000 Kelvin, 2,700 Kelvin, and 4,000 Kelvin. In this example, in addition to the states illustrated in Figure 3 and discussed above, the switching logic can support a fourth state in which only the 2,700 Kelvin string is on.

Figure 4 illustrates a schematic of an example embodiment of the circuit 200. The schematic of Figure 4 provides one example implementation of the block diagram illustrated in Figure 3.

As illustrated in Figure 4 in schematic form, the circuit 200 conforms to the foregoing discussion of the block diagram format of Figure 3. In Figure 4, the light

Menard v. Signify
Menard Exhibit 1022
Page 095

emitting diodes 150, 155 of Figure 3 are respectively represented with groups of light emitting diodes 150, 155. Additionally, the schematic details include a thermal protective switch 305 for guarding against overheating. Figure 4 thus provides one example schematic for an embodiment of the electrical system of the luminaire 100 illustrated in Figure 1 and discussed above.

As will be appreciated by those of ordinary skill, the textual and illustrated disclosure provided herein supports a wide range of embodiments and implementations. In some non-limiting example embodiments of the disclosure, a luminaire can comprise: a housing; a substrate disposed in the housing; a first plurality of light emitting diodes that are mounted to the substrate and that have a first color temperature; a second plurality of light emitting diodes that are mounted to the substrate and that have a second color temperature; and a plurality of manual switches that are disposed at the housing for permanently configuring the luminaire to: provide illumination of the first color temperature by enabling the first plurality of light emitting diodes; provide illumination of the second color temperature by enabling the second plurality of light emitting diodes; and provide illumination of a third color temperature that is between the first color temperature and the second color temperature by enabling the first plurality of light emitting diodes and the second plurality of light emitting diodes.

In some example embodiments of the luminaire, the housing can comprise an aperture that is configured for emitting area illumination, and the substrate is oriented to emit light through the aperture. In some example embodiments of the luminaire, the plurality of manual switches are mounted to the substrate. In some example embodiments of the luminaire, the plurality of manual switches are mounted in the housing. In some example embodiments of the luminaire, the plurality of manual switches are mounted to the housing. In some example embodiments of the luminaire, the plurality of manual switches comprise a dual inline pin (DIP) switch. In some example embodiments of the luminaire, the plurality of manual switches provide two switch states, and each of the two switch states provides illumination of the third color temperature by enabling the first plurality of light emitting diodes and the second plurality of light emitting diodes. In some example embodiments of the luminaire, the housing is circular and comprises a lip configured for extending around an aperture in a

Menard v. Signify
Menard Exhibit 1022
Page 096

ceiling. In some example embodiments of the luminaire, the housing comprises a wiring port disposed on a side of the housing. In some example embodiments of the luminaire, the housing comprises a light-emitting aperture in which the substrate is disposed. In some example embodiments, the luminaire further comprises: an aperture disposed at a lower side of the housing; a lens disposed at the aperture for refracting light emitted by the first and second light emitting diodes; and a reflector that is disposed between the lens and the light emitting diodes and that is operative to reflect light between the first and second light emitting diodes and the lens. In some example embodiments of the luminaire, the housing is circular and comprises a lip configured for extending around an aperture in a ceiling. In some example embodiments of the luminaire, the housing comprises a wiring port disposed on a side of the housing. In some example embodiments of the luminaire, the housing forms a cavity associated with the aperture. In some example embodiments of the luminaire, the first and second light source are mounted to a substrate that is disposed at an end of the cavity. In some example embodiments, the luminaire further comprises a reflector that is disposed in the cavity between the lens and the first and second light sources, the reflector operative to reflect light between the first and second light sources and the lens.

Technology for providing a configurable a luminaire has been described. Many modifications and other embodiments of the disclosures set forth herein will come to mind to one skilled in the art to which these disclosures pertain having the benefit of the teachings presented in the foregoing descriptions and the associated drawings. Therefore, it is to be understood that the disclosures are not to be limited to the specific embodiments disclosed and that modifications and other embodiments are intended to be included within the scope of this application. Although specific terms are employed herein, they are used in a generic and descriptive sense only and not for purposes of limitation.

Menard v. Signify
Menard Exhibit 1022
Page 097

CONFIGURABLE LIGHTING SYSTEM

CROSS REFERENCE TO RELATED APPLICATIONS

This application claims priority to U.S. Provisional Patent Application Number 62/297,424 filed February 19, 2016 in the name of Steven Walter Pyshos and Raymond Janik and entitled "Configurable Lighting System," the entire contents of which are hereby incorporated herein by reference.

TECHNICAL FIELD

Embodiments of the technology relate generally to lighting systems and more specifically to lighting systems that can be readily configured to produce illumination of different color temperatures.

BACKGROUND

For illumination applications, light emitting diodes (LEDs) offer substantial potential benefit associated with their energy efficiency, light quality, and compact size. However, to realize the full potential benefits offered by light emitting diodes, new technologies are needed.

With luminaires that incorporate incandescent or fluorescent technology, some flexibility can be obtained by swapping lamps to meet user preferences. In such luminaires, lamp selection can provide flexibility in terms of correlated color temperature (CCT or color temperature) and light output (lumen output). For example, a compact fluorescent downlight might accept 6-, 32-, and 42-watt lamps in 2700, 3000, and 3500 ~~degrees~~ K CCT. Additionally, changing lamp position and focal point in a reflector of an incandescent or fluorescent fixture can change the fixture spacing criteria (SC) of a luminaire.

In contrast, conventional light-emitting-diode-based luminaires typically offer reduced flexibility when the luminaire's light-emitting-diode-based light source is permanently attached to the luminaire. Stocking conventional light-emitting-diode-based luminaires at distribution to accommodate multiple configurations that users may desire can entail maintaining a relatively large or cumbersome inventory.

Need is apparent for a technology to provide a light emitting diode system that can adapt to various applications, for example by delivering multiple color temperatures, multiple lumens, and/or multiple photometric distributions. Need further exists for a capability to enable a single luminaire to be stocked at distribution and then quickly configured according to application parameters and deployment dictates. Need further ~~exits~~ exists for luminaires that are both energy efficient and flexible. A capability addressing one or more such needs, or some other related deficiency in the art, would support improved illumination systems and more widespread utilization of light emitting diodes in lighting applications.

SUMMARY

In some aspects of the disclosure, a system can configure a luminaire for providing illumination of a selected color temperature, a selected lumen output, or a selected photometric distribution based on an input. The input may be field selectable or may be selectable at a distribution center or at a late stage of luminaire manufacture, for example.

In some aspects of the disclosure, the luminaire can comprise at least two light sources having different color temperatures. In a first configuration, the luminaire can produce illumination of a first color temperature using a first one of the light sources. In a second configuration, the luminaire can produce illumination of a second color temperature using a second one of the light sources. In a third configuration, the luminaire can produce illumination of a third color temperature using both of the first and second the light sources. The third color temperature may be between the first and second color temperatures. The value of the third color temperature within a range between the first and second color temperatures can be controlled by manipulating the

Menard v. Signify
Menard Exhibit 1022
Page 099

relative amounts of light output by the first and second light sources. That is, adjusting the lumen outputs of the first and second light sources can define the color temperature of the illumination produced by the luminaire in the third configuration.

In some aspects of the disclosure, the luminaire can comprise at least two light sources having different lumen outputs. In a first configuration, the luminaire can produce illumination of a first lumen output using a first one of the light sources. In a second configuration, the luminaire can produce illumination of a second lumen output using a second one of the light sources. In a third configuration, the luminaire can produce illumination of a third lumen output using both of the first and second light sources.

In some aspects of the disclosure, the luminaire can comprise at least two light sources having different photometric distributions. In a first configuration, the luminaire can produce illumination of a first photometric distribution using a first one of the light sources. In a second configuration, the luminaire can produce illumination of a second photometric distribution using a second one of the light sources. In a third configuration, the luminaire can produce illumination of a third photometric distribution using both of the first and second light sources.

In some aspects of the disclosure, a circuit and an associated input to the circuit can configure a luminaire for providing illumination having a selected property, for example a selected color temperature, a selected lumen output, or a selected photometric distribution. The input can be settable to a first number of states. The circuit can map the first number of states into a second number of states that is less than the first number of states. For example, the input can have four states and the circuit can map these four states into three states. The three states can correspond to three different values of the illumination property, for example three different color temperatures, three different lumen outputs, or three different photometric distributions.

The foregoing discussion of controlling illumination is for illustrative purposes only. Various aspects of the present disclosure may be more clearly understood and appreciated from a review of the following text and by reference to the associated drawings and the claims that follow. Other aspects, systems, methods, features,

Menard v. Signify
Menard Exhibit 1022
Page 100

advantages, and objects of the present disclosure will become apparent to one with skill in the art upon examination of the following drawings and text. It is intended that all such aspects, systems, methods, features, advantages, and objects are to be included within this description and covered by this application and by the appended claims of the application.

BRIEF DESCRIPTION OF THE DRAWINGS

Figures 1A, 1B, 1C, 1D, 1E, 1F, 1G, 1H, 1I, 1J, and 1K (collectively Figure 1) illustrate views of a luminaire in accordance with some example embodiments of the disclosure.

Figure 2 illustrates a functional block diagram of a circuit that a luminaire can comprise in accordance with some example embodiments of the disclosure.

Figure 3 illustrates a state table for a circuit that a luminaire can comprise in accordance with some example embodiments of the disclosure.

Figure 4 illustrates a schematic of a circuit that a luminaire can comprise in accordance with some example embodiments of the disclosure.

Many aspects of the disclosure can be better understood with reference to the above drawings. The drawings illustrate only example embodiments and are therefore not to be considered limiting of the embodiments described, as other equally effective embodiments are within the scope and spirit of this disclosure. The elements and features shown in the drawings are not necessarily drawn to scale, emphasis instead being placed upon clearly illustrating principles of the embodiments. Additionally, certain dimensions or positionings may be exaggerated to help visually convey certain principles. In the drawings, similar reference numerals among different figures designate like or corresponding, but not necessarily identical, elements.

Menard v. Signify
Menard Exhibit 1022
Page 101

DESCRIPTION OF EXAMPLE EMBODIMENTS

In some example embodiments of the disclosure, a luminaire can comprise multiple groups of light emitting diodes of different color temperatures and a constant current power supply for powering the light emitting diodes. The power supply can utilize a switching scheme that can turn each group of light emitting diodes on and off to change the color temperature of the luminaire. In some example embodiments, the power supply can further vary the relative intensities of the light emitting diodes to manipulate the color temperature of the luminaire within a range.

For example, the luminaire can comprise a 3,000 ~~degrees~~ K group of light emitting diodes and a 4,000 ~~degrees~~ K group of light emitting diodes. When only the 3,000 ~~degrees~~ K group is on, the luminaire can deliver 3,000 ~~degrees~~ K illumination. When only the 4,000 ~~degrees~~ K group is on, the luminaire can deliver 4,000 ~~degrees~~ K illumination. When the 3,000 ~~degrees~~ K group and the 4,000 ~~degrees~~ K group are both on, the luminaire can deliver 3,500 ~~degrees~~ K illumination. If the 4,000 ~~degree~~ K group of light emitting diodes is concurrently operated at a low lumen output and the 3,000 ~~degree~~ K group is operated at a high lumen output, the luminaire may deliver illumination of another selected color temperature, for example 3,100 ~~degrees~~ K.

In some example embodiments, a controller can adjust lumen output automatically to maintain constant delivered lumens across multiple color temperatures or to ~~suite~~ suit application requirements. The controller ~~implement~~ implements the adjustment utilizing programmable driver current and/or via turning on and off various groups of light emitting diodes. Configurable color temperature or lumen output can function in combination with integral dimming, for example to facilitate interface with building automation, sensors, and dimmers.

In some example embodiments, luminaires can achieve an additional level of flexible configuration at a distribution center using interchangeable optics. For example, primary optics can provide medium distribution (e.g. spacing criteria equals 1.0), while a diffuser or concentrator lens can be used to achieve wide distribution (e.g. spacing criteria equals 1.4), and narrow distribution (e.g. spacing criteria equals 0.4).

Menard v. Signify
Menard Exhibit 1022
Page 102

In some example embodiments, a luminaire's configuration of delivered lumens and color temperatures can be set at the factory, at distribution, or in the field. To meet current and emerging code compliance, performance markings on a luminaire can indicate and correspond to the desired setting. Economical, field-installed nameplates can identify the various electrical and optical performance ratings and, when installed, permanently program the delivered lumens and color temperature. Other settings, such as dimming protocols, can likewise be configured. The interface between the nameplate and internal logic can use mechanical, electrical or optical means, for example.

Accordingly, in some embodiments of the disclosure, the technology provides product markings and supports regulatory compliance. For example, nameplates can indicate energy codes and rebate opportunities, for compliance with product labeling and to facilitate compliance confirmation by local authorities who may have jurisdiction.

Some representative embodiments will be further described hereinafter with example reference to the accompanying drawings that describe representative embodiments of the present technology. In the drawings, Figure 1 illustrates views of a representative luminaire 100; Figure 2 illustrates a functional block diagram of a representative circuit 200 that the luminaire 100 can comprise; Figure 3 illustrates a representative state table for the circuit 200; and Figure 4 illustrates a representative schematic for the circuit 200. The technology may, however, be embodied in many different forms and should not be construed as limited to the embodiments set forth herein; rather, these embodiments are provided so that this disclosure will be thorough and complete, and will fully convey the scope of the technology to those appropriately skilled in the art.

Referring now to Figure 1, multiple views of the luminaire 100 are shown. Figure 1A illustrates a side perspective view of the luminaire 100. Figure 1B illustrates a top perspective view of the luminaire 100. Figure 1C illustrates a view of the light-emitting bottom of the luminaire 100, showing a lens 120 in a light-emitting aperture 115 of the luminaire 100. Figure 1D illustrates a view of the light-emitting bottom of the luminaire 100 with the lens 120 removed from the light-emitting aperture 115 of the luminaire. Figure 1E illustrates a view of the light-emitting bottom of the luminaire 100 with the

Menard v. Signify
Menard Exhibit 1022
Page 103

lens 120 and an associated reflector 130 removed from the light-emitting aperture 115 of the luminaire. Figure 1F illustrates a cutaway perspective view of the luminaire 100. Figure 1G illustrates another cutaway perspective view of the luminaire 100. Figure 1H illustrates another cutaway view of the luminaire 100. Figures 1I, 1J, and 1K provide detailed views of a portion of the luminaire 100 comprising a cover 126 and an associated access aperture 129 for providing internal access to the luminaire 100. In Figure 1I, the cover 126 is fully removed. In Figure 1J, the cover 126 is positioned adjacent the access aperture 129, for example in connection with attachment or removal of the cover 126. In Figure 1K, the cover 126 is attached to the luminaire 100.

As best seen in the views of Figures 1A and 1B, the illustrated example luminaire 100 is suited for inserting in an aperture in a ceiling to provide overhead lighting. In this example embodiment, the luminaire 100 can be characterized as an overhead light or a recessed ceiling light. Various other indoor and outdoor luminaires that may be mounted in a wide range of orientations can be substituted for the luminaire 100 illustrated in Figure 1.

The illustrated example luminaire 100 of Figure 1 comprises a housing 105 that is circular with a protruding rim ~~100~~ <u>110</u> that extends circumferentially about the housing 105. When the luminaire 100 is installed in a ceiling aperture, the rim 100 circumscribes and covers the edge of the ceiling aperture for aesthetics, for support, and for blocking of debris from above the ceiling. Hanger clips 102 hold the luminaire 100 in place in installation.

As best illustrated in Figures 1I, 1J, and 1K, the example luminaire 100 comprises an access aperture 129 and an associated cover 126. The access aperture 129 provides access to the interior of the luminaire housing 105, for example in the field and/or during luminaire installation. An installer can remove the cover 126 and manually set a dual inline pin (DIP) switch 131 to configure the luminaire 100 for long-term operation providing illumination with a selected color temperature, a selected lumen output, and/or a selected photometric distribution. As illustrated, the dual inline pin switch 131 is mounted on a circuit board adjacent the access aperture 129, thereby facilitating convenient and efficient access in the field or at a distribution center, for example.

An electrical cable 127 extends through a wiring aperture 103 in the cover 126. The electrical cable 127 terminates in a plug 132 that mates with a receptacle 133 that is mounted inside the housing 105 adjacent the access aperture 129 for convenient field access.

As illustrated, the example cover 126 comprises two notches 123, 124 that each receives a respective screw 128 for holding the cover 126 in place. The notch 123 is disposed on the right side of the cover 126 and is sized to receive one of the screws 128. Meanwhile, the notch 124 is disposed on a left side of the cover 126 and is sized to receive the other screw 128.

The left notch 124 and the right notch 123 are oriented so that the cover 126 is rotatable about the right screw 128 when the right screw 128 is loosely disposed in the right notch 123. In other words, cover rotation can occur when the right screw 128 is in the right notch 123 with threads engaged but prior to tightening. In this position, the cover 126 can rotate clockwise about the right screw 128. Thus, the right screw 128 provides an axis of rotation for the cover 126. This clockwise rotation facilitates convenient manipulation of the cover 126 by a person working the cover 126 to cover the access aperture 129, with the screws 128 engaged but not fully tightened. The clockwise rotation of the cover 126 about the right screw 128 provides the person with a capability to slide the left notch 124 of the cover 126 conveniently under the head of the left screw 128. Once the cover 126 is rotated so the left notch 124 is under the head of the left screw 128, the person (for example an installer) can tighten the two screws 128 to secure the cover 126.

To remove the cover 126, the person loosens the two screws 128 and then rotates the cover 126 counterclockwise about the right screw 128 so that the left notch 124 moves out from under the head of the left screw 128. Once the left notch 124 is free from the left screw 128, the installer can pull the right notch 123 out from under the right screw 128 to fully remove the cover 126.

As best seen in the views of Figures 1A, 1C, 1F, and 1G, the lens 120 of the luminaire 100 is positioned adjacent the lower, exit side of the light-emitting aperture 115. As illustrated, the lens 120 can mix and blend light emitted by two groups of light

Menard v. Signify
Menard Exhibit 1022
Page 105

emitting diodes 150, 155, with each group having a different color temperature. In some embodiments, the two groups of light emitting diodes 150, 155 may have color temperatures that differ by at least 500 ~~degrees~~ Kelvin, for example. The group of light emitting diodes 150 can be characterized as one light emitting diode light source, while the group of light emitting diodes 155 can be characterized as another light emitting diode light source. Other embodiments of a light emitting diode light source may have a single light emitting diode or more light emitting diodes than the embodiment illustrated in Figure 1. A reflector 130 is disposed in and lines the aperture 115 to guide and manage the emitted light between the light emitting diodes 150, 155 and the lens 120. In some embodiments, an upper lens (not illustrated) replaces the reflector 130.

The light emitting diodes 150, 155 are mounted on a substrate 125, for example a circuit board, and form part of a circuit 200. In the illustrated embodiment, the light emitting diodes 150, 155 are interspersed. In other embodiments, the light emitting diodes 150, 155 may be separated from one another or spatially segregated according to color temperature or other appropriate parameter. As discussed in further detail below, the circuit 200 supplies electricity to the light emitting diodes 150, 155 with a level of flexibility that facilitates multiple configurations suited to different applications and installation parameters.

Turning to Figures 2, 3, and 4, some example embodiments of the circuit 200 will be discussed in further detail with example reference to the luminaire 100. The circuit 200 can be applied to other indoor and outdoor luminaires.

Referring now to Figure 2, this figure illustrates an embodiment of the circuit 200 in an example block diagram form. The circuit 200 comprises a DC power supply 205 for supplying electrical energy that the circuit 200 delivers to the light emitting diodes 150, 155. In an example embodiment, the circuit 200 comprises a light emitting diode driver.

The dual inline pin switch 131 comprises individual switches 210 that provide an input for configuring the luminaire 100 to operate at a selected color temperature. In the illustrated embodiment, the circuit 200 comprises two manual switches 210. Other embodiments may have fewer or more switches 210. In various embodiments, the

Menard v. Signify
Menard Exhibit 1022
Page 106

switches 210 can be mounted to the housing 105 of the luminaire 100, for example within the housing 105 (as illustrated in Figure 1 and discussed above) or on an exterior surface of the housing 105. In some embodiments, the switches 210 are mounted on the substrate 125. In some embodiments, the switches 210 are implemented via firmware or may be solid state.

As an alternative to the illustrated dual inline pin switch 131, the input can comprise multiple DIP switches, one or more single in-line pin packages (SIP or SIPP), one or more rocker switches, one or more reed switches, one or more magnetic switches, one or more rotary switches, one or more rotary dials, one or more selectors or selector switches, one or more slide switches, one or more snap switches, one or more thumbwheels, one or more toggles or toggle switches, one or more keys or keypads, or one or more buttons or pushbuttons, to mention a few representative examples without limitation.

As further discussed below, a controller 215 operates the light emitting diodes 150, 155 according to state of the switches 210. In some example embodiments, the controller 215 comprises logic implemented in digital circuitry, for example discrete digital components or integrated circuitry. In some example embodiments, the controller 215 utilizes microprocessor-implemented logic with instructions stored in firmware or other static or non-transitory memory.

In the illustrated embodiment, the outputs of the controller 215 are connected to two MOSFET transistors 160 to control electrical flow through two light emitting diodes 150, 155. The illustrated MOSFET transistors 160 provide one example and can be replaced with other appropriate current control devices or circuits in various embodiments. The switches 210 thus configure the luminaire 100 to operate with either or both of the light emitting diodes 150, 155. The light emitting diodes 150, 155 illustrated in Figure 2 may represent two single light emitting diodes or two groups of light emitting diodes, for example.

Figure 3 illustrates a representative table 300 describing operation of the circuit 100 according to some example embodiments. In the example of Figure 3, the light emitting diode 150 produces light having a color temperature of 3,000 ~~degrees~~ Kelvin,

Menard v. Signify
Menard Exhibit 1022
Page 107

and the light emitting diode 155 produces light having a color temperature of 4,000 ~~degrees~~ Kelvin.

As shown in the example table 300, when both of the switches 210 are in the on state, the controller 215 causes the light emitting diode 155 to be off and the light emitting diode 150 to be on. Accordingly, the luminaire 100 emits illumination having a color temperature of 3,000 ~~degrees~~ Kelvin.

When both of the switches 210 are in the off state, the controller 215 causes the light emitting diode 155 to be on and the light emitting diode 150 to be off. Accordingly, the luminaire 100 emits illumination having a color temperature of 4,000 ~~degrees~~ Kelvin.

When one of the switches 210 is in the off state and the other of the switches 210 is on the on state, the controller 215 causes the light emitting diode 155 to be on and the light emitting diode 150 to be on. The luminaire 100 thus emits illumination having a color temperature of 3,500 ~~degrees~~ Kelvin. In some other example embodiments, the controller 215 can adjust the light output of one or both of the light emitting diodes 150, 155 to set the color temperature to a specific value with the range of 3,000 to 4,000 ~~degrees~~ Kelvin.

Accordingly, the controller 215 maps the four configurations of the two switches 210 to three states for configuring the two light emitting diodes 150, 155 for permanent or long-term operation. Mapping two switch configurations to a single mode of long-term operation can simplify configuration instructions and reduce errors during field configuration. The resulting configurations support multiple color temperatures of illumination from a single luminaire 100.

Some example embodiments support fewer or more than three states of illumination. For example, in one embodiment, the luminaire 100 comprises three strings of light emitting diodes 150 that have different color temperatures, such as 3,000 ~~degrees~~ Kelvin, 2,700 ~~degrees~~ Kelvin, and 4,000 ~~degrees~~ Kelvin. In this example, in addition to the states illustrated in Figure 3 and discussed above, the switching logic can support a fourth state in which only the 2,700 ~~2,7000~~ ~~degrees~~ Kelvin string is on.

Menard v. Signify
Menard Exhibit 1022
Page 108

Figure 4 illustrates a schematic of an example embodiment of the circuit 200. The schematic of Figure 4 provides one example implementation of the block diagram illustrated in Figure 3.

As illustrated in Figure 4 in schematic form, the circuit 200 conforms to the foregoing discussion of the block diagram format of Figure 3. In Figure 4, the light emitting diodes 150, 155 of Figure 3 are respectively represented with groups of light emitting diodes 150, 155. Additionally, the schematic details include a thermal protective switch 305 for guarding against overheating. Figure 4 thus provides one example schematic for an embodiment of the electrical system of the luminaire 100 illustrated in Figure 1 and discussed above.

As will be appreciated by those of ordinary skill, the textual and illustrated disclosure provided herein supports a wide range of embodiments and implementations. In some non-limiting example embodiments of the disclosure, a luminaire can comprise: a housing; a substrate disposed in the housing; a first plurality of light emitting diodes that are mounted to the substrate and that have a first color temperature; a second plurality of light emitting diodes that are mounted to the substrate and that have a second color temperature; and a plurality of manual switches that are disposed at the housing for permanently configuring the luminaire to: provide illumination of the first color temperature by enabling the first plurality of light emitting diodes; provide illumination of the second color temperature by enabling the second plurality of light emitting diodes; and provide illumination of a third color temperature that is between the first color temperature and the second color temperature by enabling the first plurality of light emitting diodes and the second plurality of light emitting diodes.

In some example embodiments of the luminaire, the housing can comprise an aperture that is configured for emitting area illumination, and the substrate is oriented to emit light through the aperture. In some example embodiments of the luminaire, the plurality of manual switches are mounted to the substrate. In some example embodiments of the luminaire, the plurality of manual switches are mounted in the housing. In some example embodiments of the luminaire, the plurality of manual switches are mounted to the housing. In some example embodiments of the luminaire, the plurality of manual switches comprise a dual inline pin (DIP) switch. In some

Menard v. Signify
Menard Exhibit 1022
Page 109

example embodiments of the luminaire, the plurality of manual switches provide two switch states, and each of the two switch states provides illumination of the third color temperature by enabling the first plurality of light emitting diodes and the second plurality of light emitting diodes. In some example embodiments of the luminaire, the housing is circular and comprises a lip configured for extending around an aperture in a ceiling. In some example embodiments of the luminaire, the housing comprises a wiring port disposed on a side of the housing. In some example embodiments of the luminaire, the housing comprises a light-emitting aperture in which the substrate is disposed. In some example embodiments, the luminaire further comprises: an aperture disposed at a lower side of the housing; a lens disposed at the aperture for refracting light emitted by the first and second light emitting diodes; and a reflector that is disposed between the lens and the light emitting diodes and that is operative to reflect light between the first and second light emitting diodes and the lens. In some example embodiments of the luminaire, the housing is circular and comprises a lip configured for extending around an aperture in a ceiling. In some example embodiments of the luminaire, the housing comprises a wiring port disposed on a side of the housing. In some example embodiments of the luminaire, the housing forms a cavity associated with the aperture. In some example embodiments of the luminaire, the first and second light source are mounted to a substrate that is disposed at an end of the cavity. In some example embodiments, the luminaire further comprises a reflector that is disposed in the cavity between the lens and the first and second light sources, the reflector operative to reflect light between the first and second light sources and the lens.

Technology for providing a configurable a luminaire has been described. Many modifications and other embodiments of the disclosures set forth herein will come to mind to one skilled in the art to which these disclosures pertain having the benefit of the teachings presented in the foregoing descriptions and the associated drawings. Therefore, it is to be understood that the disclosures are not to be limited to the specific embodiments disclosed and that modifications and other embodiments are intended to be included within the scope of this application. Although specific terms are employed herein, they are used in a generic and descriptive sense only and not for purposes of limitation.

Menard v. Signify
Menard Exhibit 1022
Page 110

Electronic Acknowledgement Receipt

EFS ID:	30012970
Application Number:	15435141
International Application Number:	
Confirmation Number:	2406
Title of Invention:	Configurable Lighting System
First Named Inventor/Applicant Name:	Steven Walter Pyshos
Customer Number:	91764
Filer:	Robert Timothy Neufeld
Filer Authorized By:	
Attorney Docket Number:	13682.225908
Receipt Date:	08-AUG-2017
Filing Date:	16-FEB-2017
Time Stamp:	11:14:09
Application Type:	Utility under 35 USC 111(a)

Payment information:

Submitted with Payment	no

File Listing:

Document Number	Document Description	File Name	File Size(Bytes)/ Message Digest	Multi Part /.zip	Pages (if appl.)
1	Amendment/Req. Reconsideration-After Non-Final Reject	ROA_225908.pdf	129497 cc717b501798b46d9c6c37b9d58e3fa5db77513a	no	11

Warnings:

Information:					
2	Specification	Subst_Spec_Clean_225908.pdf	117077 aafc3e62353e27dd02ee72473688b3b66380fb57	no	13
Warnings:					
Information:					
3	Specification	Subst_Spec_Marked_225908.pdf	117630 4b02ddd08e5d1fc3190dbbc8f0aa09ab1178ef21	no	13
Warnings:					
Information:					
			Total Files Size (in bytes):	364204	

This Acknowledgement Receipt evidences receipt on the noted date by the USPTO of the indicated documents, characterized by the applicant, and including page counts, where applicable. It serves as evidence of receipt similar to a Post Card, as described in MPEP 503.

<u>New Applications Under 35 U.S.C. 111</u>
If a new application is being filed and the application includes the necessary components for a filing date (see 37 CFR 1.53(b)-(d) and MPEP 506), a Filing Receipt (37 CFR 1.54) will be issued in due course and the date shown on this Acknowledgement Receipt will establish the filing date of the application.
<u>National Stage of an International Application under 35 U.S.C. 371</u>
If a timely submission to enter the national stage of an international application is compliant with the conditions of 35 U.S.C. 371 and other applicable requirements a Form PCT/DO/EO/903 indicating acceptance of the application as a national stage submission under 35 U.S.C. 371 will be issued in addition to the Filing Receipt, in due course.
<u>New International Application Filed with the USPTO as a Receiving Office</u>
If a new international application is being filed and the international application includes the necessary components for an international filing date (see PCT Article 11 and MPEP 1810), a Notification of the International Application Number and of the International Filing Date (Form PCT/RO/105) will be issued in due course, subject to prescriptions concerning national security, and the date shown on this Acknowledgement Receipt will establish the international filing date of the application.

PTO/SB/08A (08-03)
Approved for use through 07/31/2006. OMB 0651-0031
U.S. Patent and Trademark Office: U.S. DEPARTMENT OF COMMERCE
Under the Paperwork Reduction Act of 1995 no persons are required to respond to a collection of information unless it contains a valid OMB control number.

Substitute for form 1449A/PTO

INFORMATION DISCLOSURE STATEMENT BY APPLICANT

(use as many sheets as necessary)

Sheet	1	of	1

Complete if Known	
Application Number	**15/435,141**
Filing Date	**02-16-2017**
First Named Inventor	**Steven Walter Pyshos**
Group Art Unit	**2844**
Examiner Name	**Jimmy T. Vu**
Attorney Docket Number	**13682.225908**

U.S. PATENT DOCUMENTS

Examiner Initials *	Cite No. [1]	U.S. Patent Document Number	Kind Code (if known)	Name of Patentee or Applicant of Cited Document	Date of Publication of Cited Document MM-DD- YYYY	Pages Columns Lines Where Relevant Passages or Relevant Figures Appear
	1.	7416312		McDermott	08-26-2008	
	2.	8317362		Ku et al.	11-27-2012	
	3.	2014/0210357		Yan et al.	07-31-2014	
	4.	2006/0220586		Latham	10-05-2006	
	5.	2017/0086265		Akiyama et al.	03-23-2017	
	6.	2017/0019973		Beck et al.	01-19-2017	

FOREIGN PATENT DOCUMENTS

Examiner Initials *	Cite No. [1]	Foreign Patent Document Office[3]	Number	Kind Code[2] (if known)	Name of Patentee or Applicant of Cited Document	Date of Publication of Cited Document MM-DD- YYYY	Pages Columns Lines Where Relevant Passages or Relevant Figures Appear	T [6]

OTHER PRIOR ART – NON PATENT LITERATURE DOCUMENTS

Examiner Initials *	Cite No. [1]	Include name of the author (in CAPITAL LETTERS) title of the article (when appropriate) title of the item (book magazine journal serial symposium catalog etc.) date page(s) volume-issue number(s) publisher city and/or country where published.	T [6]

Examiner Signature		Date Considered	

*EXAMINER: Initial if reference considered whether or not citation is in conformance with MPEP 609. Draw line through citation if not in conformance and not considered. Include copy of this form with next communication to applicant.

[1] Unique citation designation number. [2] See attached Kinds of U.S. Patent Documents. [3] Enter Office that issued the document by the two-letter code (WIPO Standard ST.3). [4] For Japanese patent documents the indication of the year of the reign of the Emperor must precede the serial number of the patent document. [5] Kind of document by the appropriate symbols as indicated on the document under WIPO Standard ST. 16 if possible. [6] Applicant is to place a check mark here if English language Translation is attached.

Burden Hour Statement: This form is estimated to take 2.0 hours to complete. Time will vary depending upon the needs of the individual case. Any comments on the amount of time you are required to complete this form should be sent to the Chief Information Officer U. S. Patent and Trademark Office Washington DC 20231. DO NOT SEND FEES OR COMPLETED FORMS TO THIS ADDRESS. SEND TO: Assistant Commissioner for Patents Washington DC 20231.
DMSLIBRARY01\30940127.v1

Electronic Patent Application Fee Transmittal	
Application Number:	15435141
Filing Date:	16-Feb-2017
Title of Invention:	Configurable Lighting System
First Named Inventor/Applicant Name:	Steven Walter Pyshos
Filer:	Robert Timothy Neufeld
Attorney Docket Number:	13682.225908

Filed as Large Entity

Filing Fees for Utility under 35 USC 111(a)

Description	Fee Code	Quantity	Amount	Sub-Total in USD($)
Basic Filing:				
Pages:				
Claims:				
Miscellaneous-Filing:				
Petition:				
Patent-Appeals-and-Interference:				
Post-Allowance-and-Post-Issuance:				
Extension-of-Time:				

Description	Fee Code	Quantity	Amount	Sub-Total in USD($)
Miscellaneous:				
Submission- Information Disclosure Stmt	1806	1	180	180
		Total in USD ($)		**180**

Electronic Acknowledgement Receipt	
EFS ID:	30003565
Application Number:	15435141
International Application Number:	
Confirmation Number:	2406
Title of Invention:	Configurable Lighting System
First Named Inventor/Applicant Name:	Steven Walter Pyshos
Customer Number:	91764
Filer:	Robert Timothy Neufeld
Filer Authorized By:	
Attorney Docket Number:	13682.225908
Receipt Date:	08-AUG-2017
Filing Date:	16-FEB-2017
Time Stamp:	15:01:39
Application Type:	Utility under 35 USC 111(a)

Payment information:

Submitted with Payment	yes
Payment Type	CARD
Payment was successfully received in RAM	$180
RAM confirmation Number	080917INTEFSW15022800
Deposit Account	
Authorized User	
The Director of the USPTO is hereby authorized to charge indicated fees and credit any overpayment as follows:	

File Listing:

Document Number	Document Description	File Name	File Size(Bytes)/ Message Digest	Multi Part /.zip	Pages (if appl.)
1	Transmittal Letter	225908trans.pdf	88906 d33b48f7ed294f8bb6caa6f7960e36b9981fb064	no	3
Warnings:					
Information:					
2	Information Disclosure Statement (IDS) Form (SB08)	225908ids.pdf	136055 615fb91922f9b67c956b4aa7c123f8f7478f9c5d	no	1
Warnings:					
Information:					
This is not an USPTO supplied IDS fillable form					
3	Fee Worksheet (SB06)	fee-info.pdf	30190 a57f8444629317251ce019780f6b8fb54f81eac3	no	2
Warnings:					
Information:					
		Total Files Size (in bytes):	255151		

This Acknowledgement Receipt evidences receipt on the noted date by the USPTO of the indicated documents, characterized by the applicant, and including page counts, where applicable. It serves as evidence of receipt similar to a Post Card, as described in MPEP 503.

New Applications Under 35 U.S.C. 111
If a new application is being filed and the application includes the necessary components for a filing date (see 37 CFR 1.53(b)-(d) and MPEP 506), a Filing Receipt (37 CFR 1.54) will be issued in due course and the date shown on this Acknowledgement Receipt will establish the filing date of the application.
National Stage of an International Application under 35 U.S.C. 371
If a timely submission to enter the national stage of an international application is compliant with the conditions of 35 U.S.C. 371 and other applicable requirements a Form PCT/DO/EO/903 indicating acceptance of the application as a national stage submission under 35 U.S.C. 371 will be issued in addition to the Filing Receipt, in due course.
New International Application Filed with the USPTO as a Receiving Office
If a new international application is being filed and the international application includes the necessary components for an international filing date (see PCT Article 11 and MPEP 1810), a Notification of the International Application Number and of the International Filing Date (Form PCT/RO/105) will be issued in due course, subject to prescriptions concerning national security, and the date shown on this Acknowledgement Receipt will establish the international filing date of the application.

IN THE UNITED STATES PATENT AND TRADEMARK OFFICE

In re Application of:	)	
Steven Walter Pyshos et al.	)	Group Art Unit: **2844**
	)	
Application No.: **15/435,141**	)	Confirmation No.: **2406**
	)	
Filed: **February 16, 2017**	)	Examiner: **Jimmy T. Vu**
	)	
Title: **Configurable Lighting System**	)	Attorney Docket No.: **13682.225908**

INFORMATION DISCLOSURE STATEMENT

Commissioner for Patents
P.O. Box 1450
Alexandria, VA 22313-1450

Sir:

This Information Disclosure Statement is filed in accordance with 37 C.F.R. §§1.56, 1.97 and 1.98. The items listed on Form SB/08B are made of record to assist the Patent and Trademark Office in its examination of this application. The Examiner is respectfully requested to fully consider the items and to independently ascertain their teaching.

1. ☐ For each of the following items listed on the enclosed copy of Form SB/08B that is not in the English language, an English language translation of that item or a portion thereof or a concise explanation of the relevance of that item is enclosed:

2. ☐ For each of the following items listed on the enclosed copy of Form SB/08B that is not in the English language, a concise explanation of the relevance of that item is provided:

3. ☐ Any copy of the items listed on the enclosed copy of Form SB/08B that is not enclosed with this Information Disclosure Statement was previously cited by or submitted to the Patent and Trademark Office in application Serial No. 14/729,941, 13/407401

4. ☐ No fee is due under 37 C.F.R. §1.17(p) for this Information Disclosure Statement since it is being filed in compliance with:

   ☐ 37 C.F.R. §1.97(b)(1), within three months of the filing date of a national application other than a CPA; or

☐ 37 C.F.R. §1.97(b)(2), within three months of the date of entry into the national stage as set forth in §1.491 in an international application; or

☐ 37 C.F.R. §1.97(b)(3), before the mailing date of a first Office action on the merits; or

☐ 37 C.F.R. §1.97(b)(4) before the mailing date of a first office action after the filing of an RCE under §1.114

5. ☐ No fee is due under 37 C.F.R. §1.17(p) for this Supplemental Information Disclosure Statement since it is being filed in compliance with 37 C.F.R. §1.97(c), after the period specified in paragraph 4 above but before the mailing date of a final action or a Notice of Allowance (where there has been no prior final action), and is accompanied by one of the certifications pursuant to 37 C.F.R. §1.97(e) set forth in paragraph 9 below.

6. ☐ A fee is due under 37 C.F.R. §1.17(p) for this Supplemental Information Disclosure Statement since it is being filed in compliance with 37 C.F.R. §1.97(c), after the period specified in paragraph 4 above but before the mailing date of a final action or a notice of allowance (where there has been no prior final action):

☐ Payment of $180.00 is being made with a credit card via EFS-Web.

☐ Charge the fee to Deposit Account No.11-0980, Order No._____.

7. ☒ A fee is due under 37 C.F.R. §1.17(p) for this Supplemental Information Disclosure Statement since it is being filed in compliance with 37 C.F.R. §1.97(d), after the mailing date of a final action or a notice of allowance, whichever comes first, but before payment of the issue fee, and is accompanied by:

a. one of the certifications pursuant to 37 C.F.R. §1.97(e) set forth in paragraph 9 below; and

b. the fee due under 37 C.F.R. §1.17(p) which is paid as set forth in paragraph 11 below.

8. ☐ This Supplemental Information Disclosure Statement is being filed in compliance with:

a. ☐ 37 C.F.R. §1.313(b)(3) or §1.313(c)(1), after the issue fee has been paid and information cited in this Supplemental Information Disclosure Statement may render at least one claim unpatentable and is accompanied by the attached Petition To Withdraw Application From Issue and fee pursuant to 37 C.F.R. §1.17(h);

b. ☐ 37 C.F.R. §1.313(c)(2) or §1.313(c)(3), after the issue fee has been paid and information cited in this Supplemental Information Disclosure Statement is to be considered in a Request for Continued Examination (RCE) or a Continuation application upon abandonment of the instant application and is accompanied by the attached Petition To Withdraw Application From Issue and fee pursuant to 37 C.F.R. §1.17(h).

c. ☐ The fee due under 37 C.F.R. §§1.17(h) is paid as set forth in paragraph 11 below.

9. ☐ I hereby certify that each item of information contained in this Supplemental Information Disclosure Statement was first cited in a communication from a foreign patent office in a counterpart foreign application not more than three months prior to the filing of this Supplemental Information Disclosure Statement.

☒ I hereby certify that no item of information in the Supplemental Information Disclosure Statement filed herewith was cited in a communication from a foreign patent office in a counterpart foreign application or, to my knowledge after making reasonable inquiry, was known to any individual designated in §1.56(c) more than three months prior to the filing of this Supplemental Information Disclosure Statement.

10. ☐ This document is accompanied by ☐ a Search Report ☐ Communication which was cited in a corresponding ☐ PCT or ☐ Foreign counterpart application.

11. ☒ Charge any fees due under 37 C.F.R. §§1.17(h) and 1.17(p) to Deposit Account No.-110980.

☒ The Commissioner is hereby authorized to charge any additional fees which may be required for this Information Disclosure Statement, or credit any overpayment to Deposit Account No. 11-0980.

Respectfully submitted,
KING & SPALDING LLP

/ Robert T. Neufeld /
Robert T. Neufeld
Reg. No. 48,394

Correspondence Address:
King & Spalding LLP
1180 Peachtree Street
Atlanta, GA 30309
404-572-4600 Telephone
404-572-5100 Facsimile

PTO/SB/06 (09-11)
Approved for use through 1/31/2014. OMB 0651-0032
U.S. Patent and Trademark Office; U.S. DEPARTMENT OF COMMERCE
Under the Paperwork Reduction Act of 1995, no persons are required to respond to a collection of information unless it displays a valid OMB control number.

PATENT APPLICATION FEE DETERMINATION RECORD Substitute for Form PTO-875	Application or Docket Number 15/435,141	Filing Date 02/16/2017	☐ To be Mailed

ENTITY: ☒ LARGE ☐ SMALL ☐ MICRO

APPLICATION AS FILED – PART I

FOR	(Column 1) NUMBER FILED	(Column 2) NUMBER EXTRA	RATE ($)	FEE ($)
☐ BASIC FEE (37 CFR 1.16(a), (b), or (c))	N/A	N/A	N/A	
☐ SEARCH FEE (37 CFR 1.16(k), (i), or (m))	N/A	N/A	N/A	
☐ EXAMINATION FEE (37 CFR 1.16(o), (p), or (q))	N/A	N/A	N/A	
TOTAL CLAIMS (37 CFR 1.16(i))	minus 20 =	*	X $ =	
INDEPENDENT CLAIMS (37 CFR 1.16(h))	minus 3 =	*	X $ =	
☐ APPLICATION SIZE FEE (37 CFR 1.16(s))	If the specification and drawings exceed 100 sheets of paper, the application size fee due is $310 ($155 for small entity) for each additional 50 sheets or fraction thereof. See 35 U.S.C. 41(a)(1)(G) and 37 CFR 1.16(s).			
☐ MULTIPLE DEPENDENT CLAIM PRESENT (37 CFR 1.16(j))				
* If the difference in column 1 is less than zero, enter "0" in column 2.			TOTAL	

APPLICATION AS AMENDED – PART II

AMENDMENT	08/08/2017	(Column 1) CLAIMS REMAINING AFTER AMENDMENT		(Column 2) HIGHEST NUMBER PREVIOUSLY PAID FOR	(Column 3) PRESENT EXTRA	RATE ($)	ADDITIONAL FEE ($)
	Total (37 CFR 1.16(i))	* 20	Minus	** 20	= 0	X $80 =	0
	Independent (37 CFR 1.16(h))	* 3	Minus	***3	= 0	X $420 =	0
	☐ Application Size Fee (37 CFR 1.16(s))						
	☐ FIRST PRESENTATION OF MULTIPLE DEPENDENT CLAIM (37 CFR 1.16(j))						
						TOTAL ADD'L FEE	**0**

AMENDMENT		(Column 1) CLAIMS REMAINING AFTER AMENDMENT		(Column 2) HIGHEST NUMBER PREVIOUSLY PAID FOR	(Column 3) PRESENT EXTRA	RATE ($)	ADDITIONAL FEE ($)
	Total (37 CFR 1.16(i))	*	Minus	**	=	X $ =	
	Independent (37 CFR 1.16(h))	*	Minus	***	=	X $ =	
	☐ Application Size Fee (37 CFR 1.16(s))						
	☐ FIRST PRESENTATION OF MULTIPLE DEPENDENT CLAIM (37 CFR 1.16(j))						
						TOTAL ADD'L FEE	

* If the entry in column 1 is less than the entry in column 2, write "0" in column 3.
** If the "Highest Number Previously Paid For" IN THIS SPACE is less than 20, enter "20".
*** If the "Highest Number Previously Paid For" IN THIS SPACE is less than 3, enter "3".
The "Highest Number Previously Paid For" (Total or Independent) is the highest number found in the appropriate box in column 1.

LIE
BURNELL L. ROSS

This collection of information is required by 37 CFR 1.16. The information is required to obtain or retain a benefit by the public which is to file (and by the USPTO to process) an application. Confidentiality is governed by 35 U.S.C. 122 and 37 CFR 1.14. This collection is estimated to take 12 minutes to complete, including gathering, preparing, and submitting the completed application form to the USPTO. Time will vary depending upon the individual case. Any comments on the amount of time you require to complete this form and/or suggestions for reducing this burden, should be sent to the Chief Information Officer, U.S. Patent and Trademark Office, U.S. Department of Commerce, P.O. Box 1450, Alexandria, VA 22313-1450. DO NOT SEND FEES OR COMPLETED FORMS TO THIS ADDRESS. **SEND TO: Commissioner for Patents, P.O. Box 1450, Alexandria, VA 22313-1450.**
If you need assistance in completing the form, call 1-800-PTO-9199 and select option 2.

Patents

IN THE UNITED STATES PATENT AND TRADEMARK OFFICE

In re Application of: **Steven Walter Pyshos et al.**	)	Group Art Unit: **2844**
Application No.: **15/435,141**	)	Confirmation No.: **2406**
Filed: **February 16, 2017**	)	Examiner: **Jimmy T. Vu**
Title: **Configurable Lighting System**	)	Attorney Docket No.: **13682.225908**

SUPPLEMENTAL RESPONSE TO EX PARTE QUAYLE OFFICE ACTION

Mail Stop Amendment
Commissioner for Patents
P.O. Box 1450
Alexandria, VA 22313-1450

Sir:

Applicant previously filed a Response on August 8, 2017 to the Ex Parte Quayle Action dated July 14, 2017. Applicant requests that the Examiner disregard the previous Response and instead consider this Supplemental Response to the Ex Parte Quayle Action dated July 14, 2017, and enter and consider the following amendments and remarks.

- **Amendments to the specification** begin on page 2 of this paper;
- **Claim amendments** begin on page 3 of this paper; and
- **Remarks** follow the claim amendments.

While Applicant submits that no fees are due, to the extent the Office determines any fees are due, the Commissioner is hereby authorized to charge any necessary fees to Deposit Account 11-0980.

I hereby certify that this correspondence is electronically filed via EFS-WEB with the Commissioner for Patents, P.O. Box 1450, Alexandria, VA 22313-1450, on August 23, 2017.

/ Robert T. Neufeld /
Robert T. Neufeld, Reg. No. 48,394

DMSLIBRARY01\31002223.v1

AMENDMENTS TO THE SPECIFICATION

Please replace the specification with the attached amended specification, provided in clean and marked form. The amended specification corrects minor errors in the original specification. No new matter is presented with the amended specification.

CLAIM AMENDMENTS

Please amend the claims as follows.

1. (Original) A luminaire comprising:

an input settable in a first, a second, a third, and a fourth state;

a first light source having a first color temperature;

a second light source having a second color temperature; and

a controller connected to the input, the first light source, and the second light source, the controller configured to:

power the first light source when the input is in the first state;

power the second light source when the input is in the second state;

power the first light source and the second light source when the input is in the third state; and

power the first light source and the second light source when the input is in the fourth state.

2. (Original) The luminaire of Claim 1, wherein the input comprises a first switch and a second switch.

3. (Original) The luminaire of Claim 2, wherein the first state comprises the first switch off and the second switch off,

wherein the second state comprises the first switch on and the second switch on,

wherein the third state comprises the first switch on and the second switch off, and

wherein the fourth state comprises the first switch off and the second switch on.

4. (Original) The luminaire of Claim 3, wherein when the input is set to the first state, the luminaire emits light of the first color temperature,

wherein when the input is set to the second state, the luminaire emits light of the second color temperature,

wherein when the input is set to the third state, the luminaire emits light of a third color temperature that is between the first color temperature and the second color temperature, and

wherein when the input is set to the fourth state, the luminaire emits light of the third color temperature.

5. (Currently Amended) The luminaire of Claim 1 [[5]], wherein the first light source comprises a first light emitting diode,

wherein the second light source comprises a second light emitting diode, and

wherein the first color temperature is separated from the second color temperature by no less than 500 ~~degrees~~ Kelvin.

6. (Original) The luminaire of Claim 1, wherein the first light source comprises a first bank of light emitting diodes, and

wherein the second light source comprises a second bank of light emitting diodes.

7. (Original) The luminaire of Claim 1, wherein the controller comprises digital logic,

wherein the input comprises a dual inline pin (DIP) switch mounted on a circuit board, and

wherein a first configuration of the DIP switch defines the first state, a second configuration of the DIP switch defines the second state, a third configuration of the DIP switch defines the third state, and a fourth configuration of the DIP switch defines the fourth state.

8. (Original) The luminaire of Claim 1, further comprising a housing that encloses the first light source, the second light source, the input, and the controller, the housing comprising:

a first aperture that provides access to the input for setting the input manually to the first state, the second state, the third state, or the fourth state during luminaire installation; and

a cover covering the aperture and comprising a second aperture that is sized to receive an electrical cable for powering the luminaire.

9. (Original) The luminaire of Claim 8, wherein the input comprises a dual inline pin (DIP) switch mounted to the housing adjacent the first aperture, and

wherein the cover further comprises:

a first notch that is disposed on a first side of the cover and that is sized to receive a first fastener for fastening the cover to the housing; and

a second notch that is disposed on a second side of the cover and that is sized to receive a second fastener for fastening the cover to the housing,

wherein the first notch and the second notch are oriented so that the cover is rotatable about the first fastener when the first fastener is loosely disposed in the first notch, with the second fastener disposable in the second notch during said rotation of the cover.

10. (Currently Amended) A luminaire comprising:

a first light emitting diode light source configured to produce illumination of a first color temperature;

a second light emitting diode light source configured to produce illumination of a second color temperature that is different than the first color temperature;

an input settable in a first plurality of states; and

a circuit that is connected to the first light emitting diode light, the second light emitting diode light source, and the input and that is operable to:

map the first plurality of states into a second plurality of states, wherein the first plurality <u>of states</u> is greater than the second plurality <u>of states</u>; and

control the first light emitting diode light source and the second light emitting diode light source according to the second plurality of states.

11. (Original) The luminaire of Claim 10, wherein mapping the first plurality of states into the second plurality of states comprises producing one state in the second plurality of states for each of two states in the first plurality of states.

12. (Original) The luminaire of Claim 10, wherein the first plurality of states comprises a first state and a second state,

wherein the second plurality of states comprises a third state, and

wherein mapping the first plurality of states into the second plurality of states comprises mapping the first state and the second state into the third state.

13. (Original) The luminaire of Claim 12, wherein in the first state, the luminaire produces illumination of the first color temperature using the first light emitting diode light source,

wherein in the second state, the luminaire produces illumination of the second color temperature using the second light emitting diode light source,

wherein in the third state, the luminaire produces illumination of the third color temperature using the first light emitting diode light source and the second light emitting diode light source, and

wherein the third color temperature is between the first color temperature and the second color temperature.

14. (Original) The luminaire of Claim 10, wherein the input comprises a dual inline pin (DIP) switch,

wherein the luminaire further comprising a housing that encloses the first light emitting diode light source, the second light emitting diode light source, the DIP switch, and the circuit,

wherein the housing comprises:

a first aperture that provides access to the DIP switch for state selection during luminaire installation, and

a cover configured for covering the aperture.

15. (Original) The luminaire of Claim 10, wherein the first light emitting diode light source comprises at least two light emitting diodes,

wherein the second light emitting diode light source comprises at least two other light emitting diodes,

wherein the circuit comprises:

digital logic; and

a light emitting diode driver that is controlled by the digital logic,

wherein there are four states in the first plurality of states,

wherein there are three states in the second plurality of states, and

wherein the three states correspond to three different color temperatures of illumination produced by the luminaire.

16. (Currently Amended) A luminaire comprising:

a housing comprising an aperture;

a lens disposed at the aperture;

a first light source and a second light source that are mounted in the housing and that are oriented to emit light through the aperture and the lens for area illumination, wherein the first light source has a first color temperature and the second light source has a second color temperature; and

one or more switches that are mounted at the housing and that are operable to configure the luminaire in a first long-term operating configuration, a second long-term operating configuration, and a third long-term operating configuration,

wherein in the first long-term operating configuration, the first light source is active, the second light source is inactive, and the luminaire is configured to emit light of the first color temperature,

wherein in the second long-term operating configuration, the first light source is inactive, the second light source is active, and the luminaire is configured to emit light of the second color temperature, and

wherein in the third long-term operating configuration, the first light source is active, the second light source is active, and the luminaire is configured to emit light of a third color temperature that is between the first color temperature and the second color temperature.

17. (Currently Amended) The luminaire of Claim 16, wherein the one or more switches have two switch states that each produce ~~produces~~ the third long-term operating configuration.

18. (Original) The luminaire of Claim 16, wherein the first light source comprises at least one light emitting diode, and

wherein the second light source comprises at least one other light emitting diode.

19. (Currently Amended) The luminaire of Claim 18, wherein the luminaire is configured for mounting to a ceiling,

wherein the housing further comprises a cover sized to cover the aperture, and

wherein the one or more switches are disposed in the housing adjacent the aperture for access during luminaire installation.

20. (Currently Amended) The luminaire of Claim 19, wherein the one or more switches comprise a dual inline pin (DIP) switch.

REMARKS

Reconsideration of the present application is respectfully requested in view of the following remarks.

I. Status of the Claims

Claims 1-20 are pending, with Claim 1, 10, and 16 being independent. Applicant presents amendments to the claims to address minor informalities, including those identified in the Ex Parte Quayle Action. Applicant also presents amendments to the specification to address minor informalities. Clean and marked versions of the amended specification are provided with this Response. Support for the amendments can be found throughout the specification and drawings as filed, including at lines 6-13 on page 10 of the specification. Accordingly, no new matter is presented with the amendments to the claims and the specification. All of Applicant's amendments are without prejudice or disclaimer.

CONCLUSION

Applicant submits the foregoing as a full and complete response to the Ex Parte Quayle Action. Applicant submits that this response places the present application into condition for allowance and respectfully requests such action. If any issues exist that can be resolved with an Examiner's Amendment or a telephone conference, the Examiner is requested to please contact the Applicant's undersigned representative at 404.572.3505.

Respectfully submitted,

/ Robert T. Neufeld /

Robert T. Neufeld
Reg. No. 48,394

King & Spalding LLP
34th Floor
1180 Peachtree Street, N.E.
Atlanta, Georgia 30309-3521
404.572.4600
Docket No. 13682.225908

Menard v. Signify
Menard Exhibit 1022
Page 132

CONFIGURABLE LIGHTING SYSTEM

CROSS REFERENCE TO RELATED APPLICATIONS

This application claims priority to U.S. Provisional Patent Application Number 62/297,424 filed February 19, 2016 in the name of Steven Walter Pyshos and Raymond Janik and entitled "Configurable Lighting System," the entire contents of which are hereby incorporated herein by reference.

TECHNICAL FIELD

Embodiments of the technology relate generally to lighting systems and more specifically to lighting systems that can be readily configured to produce illumination of different color temperatures.

BACKGROUND

For illumination applications, light emitting diodes (LEDs) offer substantial potential benefit associated with their energy efficiency, light quality, and compact size. However, to realize the full potential benefits offered by light emitting diodes, new technologies are needed.

With luminaires that incorporate incandescent or fluorescent technology, some flexibility can be obtained by swapping lamps to meet user preferences. In such luminaires, lamp selection can provide flexibility in terms of correlated color temperature (CCT or color temperature) and light output (lumen output). For example, a compact fluorescent downlight might accept 6-, 32-, and 42-watt lamps in 2700, 3000, and 3500 K CCT. Additionally, changing lamp position and focal point in a reflector of an incandescent or fluorescent fixture can change the fixture spacing criteria (SC) of a luminaire.

In contrast, conventional light-emitting-diode-based luminaires typically offer reduced flexibility when the luminaire's light-emitting-diode-based light source is permanently attached to the luminaire. Stocking conventional light-emitting-diode-based luminaires at distribution to accommodate multiple configurations that users may desire can entail maintaining a relatively large or cumbersome inventory.

Need is apparent for a technology to provide a light emitting diode system that can adapt to various applications, for example by delivering multiple color temperatures, multiple lumens, and/or multiple photometric distributions. Need further exists for a capability to enable a single luminaire to be stocked at distribution and then quickly configured according to application parameters and deployment dictates. Need further exists for luminaires that are both energy efficient and flexible. A capability addressing one or more such needs, or some other related deficiency in the art, would support improved illumination systems and more widespread utilization of light emitting diodes in lighting applications.

SUMMARY

In some aspects of the disclosure, a system can configure a luminaire for providing illumination of a selected color temperature, a selected lumen output, or a selected photometric distribution based on an input. The input may be field selectable or may be selectable at a distribution center or at a late stage of luminaire manufacture, for example.

In some aspects of the disclosure, the luminaire can comprise at least two light sources having different color temperatures. In a first configuration, the luminaire can produce illumination of a first color temperature using a first one of the light sources. In a second configuration, the luminaire can produce illumination of a second color temperature using a second one of the light sources. In a third configuration, the luminaire can produce illumination of a third color temperature using both of the first and second the light sources. The third color temperature may be between the first and second color temperatures. The value of the third color temperature within a range between the first and second color temperatures can be controlled by manipulating the

Menard v. Signify
Menard Exhibit 1022
Page 134

relative amounts of light output by the first and second light sources. That is, adjusting the lumen outputs of the first and second light sources can define the color temperature of the illumination produced by the luminaire in the third configuration.

In some aspects of the disclosure, the luminaire can comprise at least two light sources having different lumen outputs. In a first configuration, the luminaire can produce illumination of a first lumen output using a first one of the light sources. In a second configuration, the luminaire can produce illumination of a second lumen output using a second one of the light sources. In a third configuration, the luminaire can produce illumination of a third lumen output using both of the first and second light sources.

In some aspects of the disclosure, the luminaire can comprise at least two light sources having different photometric distributions. In a first configuration, the luminaire can produce illumination of a first photometric distribution using a first one of the light sources. In a second configuration, the luminaire can produce illumination of a second photometric distribution using a second one of the light sources. In a third configuration, the luminaire can produce illumination of a third photometric distribution using both of the first and second light sources.

In some aspects of the disclosure, a circuit and an associated input to the circuit can configure a luminaire for providing illumination having a selected property, for example a selected color temperature, a selected lumen output, or a selected photometric distribution. The input can be settable to a first number of states. The circuit can map the first number of states into a second number of states that is less than the first number of states. For example, the input can have four states and the circuit can map these four states into three states. The three states can correspond to three different values of the illumination property, for example three different color temperatures, three different lumen outputs, or three different photometric distributions.

The foregoing discussion of controlling illumination is for illustrative purposes only. Various aspects of the present disclosure may be more clearly understood and appreciated from a review of the following text and by reference to the associated drawings and the claims that follow. Other aspects, systems, methods, features,

Menard v. Signify
Menard Exhibit 1022
Page 135

advantages, and objects of the present disclosure will become apparent to one with skill in the art upon examination of the following drawings and text. It is intended that all such aspects, systems, methods, features, advantages, and objects are to be included within this description and covered by this application and by the appended claims of the application.

BRIEF DESCRIPTION OF THE DRAWINGS

Figures 1A, 1B, 1C, 1D, 1E, 1F, 1G, 1H, 1I, 1J, and 1K (collectively Figure 1) illustrate views of a luminaire in accordance with some example embodiments of the disclosure.

Figure 2 illustrates a functional block diagram of a circuit that a luminaire can comprise in accordance with some example embodiments of the disclosure.

Figure 3 illustrates a state table for a circuit that a luminaire can comprise in accordance with some example embodiments of the disclosure.

Figure 4 illustrates a schematic of a circuit that a luminaire can comprise in accordance with some example embodiments of the disclosure.

Many aspects of the disclosure can be better understood with reference to the above drawings. The drawings illustrate only example embodiments and are therefore not to be considered limiting of the embodiments described, as other equally effective embodiments are within the scope and spirit of this disclosure. The elements and features shown in the drawings are not necessarily drawn to scale, emphasis instead being placed upon clearly illustrating principles of the embodiments. Additionally, certain dimensions or positionings may be exaggerated to help visually convey certain principles. In the drawings, similar reference numerals among different figures designate like or corresponding, but not necessarily identical, elements.

Menard v. Signify
Menard Exhibit 1022
Page 136

DESCRIPTION OF EXAMPLE EMBODIMENTS

In some example embodiments of the disclosure, a luminaire can comprise multiple groups of light emitting diodes of different color temperatures and a constant current power supply for powering the light emitting diodes. The power supply can utilize a switching scheme that can turn each group of light emitting diodes on and off to change the color temperature of the luminaire. In some example embodiments, the power supply can further vary the relative intensities of the light emitting diodes to manipulate the color temperature of the luminaire within a range.

For example, the luminaire can comprise a 3,000 K group of light emitting diodes and a 4,000 K group of light emitting diodes. When only the 3,000 K group is on, the luminaire can deliver 3,000 K illumination. When only the 4,000 K group is on, the luminaire can deliver 4,000 K illumination. When the 3,000 K group and the 4,000 K group are both on, the luminaire can deliver 3,500 K illumination. If the 4,000 K group of light emitting diodes is concurrently operated at a low lumen output and the 3,000 K group is operated at a high lumen output, the luminaire may deliver illumination of another selected color temperature, for example 3,100 K.

In some example embodiments, a controller can adjust lumen output automatically to maintain constant delivered lumens across multiple color temperatures or to suit application requirements. The controller implements the adjustment utilizing programmable driver current and/or via turning on and off various groups of light emitting diodes. Configurable color temperature or lumen output can function in combination with integral dimming, for example to facilitate interface with building automation, sensors, and dimmers.

In some example embodiments, luminaires can achieve an additional level of flexible configuration at a distribution center using interchangeable optics. For example, primary optics can provide medium distribution (e.g. spacing criteria equals 1.0), while a diffuser or concentrator lens can be used to achieve wide distribution (e.g. spacing criteria equals 1.4), and narrow distribution (e.g. spacing criteria equals 0.4).

In some example embodiments, a luminaire's configuration of delivered lumens and color temperatures can be set at the factory, at distribution, or in the field. To meet

Menard v. Signify
Menard Exhibit 1022
Page 137

current and emerging code compliance, performance markings on a luminaire can indicate and correspond to the desired setting. Economical, field-installed nameplates can identify the various electrical and optical performance ratings and, when installed, permanently program the delivered lumens and color temperature. Other settings, such as dimming protocols, can likewise be configured. The interface between the nameplate and internal logic can use mechanical, electrical or optical means, for example.

Accordingly, in some embodiments of the disclosure, the technology provides product markings and supports regulatory compliance. For example, nameplates can indicate energy codes and rebate opportunities, for compliance with product labeling and to facilitate compliance confirmation by local authorities who may have jurisdiction.

Some representative embodiments will be further described hereinafter with example reference to the accompanying drawings that describe representative embodiments of the present technology. In the drawings, Figure 1 illustrates views of a representative luminaire 100; Figure 2 illustrates a functional block diagram of a representative circuit 200 that the luminaire 100 can comprise; Figure 3 illustrates a representative state table for the circuit 200; and Figure 4 illustrates a representative schematic for the circuit 200. The technology may, however, be embodied in many different forms and should not be construed as limited to the embodiments set forth herein; rather, these embodiments are provided so that this disclosure will be thorough and complete, and will fully convey the scope of the technology to those appropriately skilled in the art.

Referring now to Figure 1, multiple views of the luminaire 100 are shown. Figure 1A illustrates a side perspective view of the luminaire 100. Figure 1B illustrates a top perspective view of the luminaire 100. Figure 1C illustrates a view of the light-emitting bottom of the luminaire 100, showing a lens 120 in a light-emitting aperture 115 of the luminaire 100. Figure 1D illustrates a view of the light-emitting bottom of the luminaire 100 with the lens 120 removed from the light-emitting aperture 115 of the luminaire. Figure 1E illustrates a view of the light-emitting bottom of the luminaire 100 with the lens 120 and an associated reflector 130 removed from the light-emitting aperture 115 of the luminaire. Figure 1F illustrates a cutaway perspective view of the luminaire 100.

Figure 1G illustrates another cutaway perspective view of the luminaire 100. Figure 1H illustrates another cutaway view of the luminaire 100. Figures 1I, 1J, and 1K provide detailed views of a portion of the luminaire 100 comprising a cover 126 and an associated access aperture 129 for providing internal access to the luminaire 100. In Figure 1I, the cover 126 is fully removed. In Figure 1J, the cover 126 is positioned adjacent the access aperture 129, for example in connection with attachment or removal of the cover 126. In Figure 1K, the cover 126 is attached to the luminaire 100.

As best seen in the views of Figures 1A and 1B, the illustrated example luminaire 100 is suited for inserting in an aperture in a ceiling to provide overhead lighting. In this example embodiment, the luminaire 100 can be characterized as an overhead light or a recessed ceiling light. Various other indoor and outdoor luminaires that may be mounted in a wide range of orientations can be substituted for the luminaire 100 illustrated in Figure 1.

The illustrated example luminaire 100 of Figure 1 comprises a housing 105 that is circular with a protruding rim 110 that extends circumferentially about the housing 105. When the luminaire 100 is installed in a ceiling aperture, the rim 100 circumscribes and covers the edge of the ceiling aperture for aesthetics, for support, and for blocking of debris from above the ceiling. Hanger clips 102 hold the luminaire 100 in place in installation.

As best illustrated in Figures 1I, 1J, and 1K, the example luminaire 100 comprises an access aperture 129 and an associated cover 126. The access aperture 129 provides access to the interior of the luminaire housing 105, for example in the field and/or during luminaire installation. An installer can remove the cover 126 and manually set a dual inline pin (DIP) switch 131 to configure the luminaire 100 for long-term operation providing illumination with a selected color temperature, a selected lumen output, and/or a selected photometric distribution. As illustrated, the dual inline pin switch 131 is mounted on a circuit board adjacent the access aperture 129, thereby facilitating convenient and efficient access in the field or at a distribution center, for example.

An electrical cable 127 extends through a wiring aperture 103 in the cover 126. The electrical cable 127 terminates in a plug 132 that mates with a receptacle 133 that is

mounted inside the housing 105 adjacent the access aperture 129 for convenient field access.

As illustrated, the example cover 126 comprises two notches 123, 124 that each receives a respective screw 128 for holding the cover 126 in place. The notch 123 is disposed on the right side of the cover 126 and is sized to receive one of the screws 128. Meanwhile, the notch 124 is disposed on a left side of the cover 126 and is sized to receive the other screw 128.

The left notch 124 and the right notch 123 are oriented so that the cover 126 is rotatable about the right screw 128 when the right screw 128 is loosely disposed in the right notch 123. In other words, cover rotation can occur when the right screw 128 is in the right notch 123 with threads engaged but prior to tightening. In this position, the cover 126 can rotate clockwise about the right screw 128. Thus, the right screw 128 provides an axis of rotation for the cover 126. This clockwise rotation facilitates convenient manipulation of the cover 126 by a person working the cover 126 to cover the access aperture 129, with the screws 128 engaged but not fully tightened. The clockwise rotation of the cover 126 about the right screw 128 provides the person with a capability to slide the left notch 124 of the cover 126 conveniently under the head of the left screw 128. Once the cover 126 is rotated so the left notch 124 is under the head of the left screw 128, the person (for example an installer) can tighten the two screws 128 to secure the cover 126.

To remove the cover 126, the person loosens the two screws 128 and then rotates the cover 126 counterclockwise about the right screw 128 so that the left notch 124 moves out from under the head of the left screw 128. Once the left notch 124 is free from the left screw 128, the installer can pull the right notch 123 out from under the right screw 128 to fully remove the cover 126.

As best seen in the views of Figures 1A, 1C, 1F, and 1G, the lens 120 of the luminaire 100 is positioned adjacent the lower, exit side of the light-emitting aperture 115. As illustrated, the lens 120 can mix and blend light emitted by two groups of light emitting diodes 150, 155, with each group having a different color temperature. In some embodiments, the two groups of light emitting diodes 150, 155 may have color

Menard v. Signify
Menard Exhibit 1022
Page 140

temperatures that differ by at least 500 Kelvin, for example. The group of light emitting diodes 150 can be characterized as one light emitting diode light source, while the group of light emitting diodes 155 can be characterized as another light emitting diode light source. Other embodiments of a light emitting diode light source may have a single light emitting diode or more light emitting diodes than the embodiment illustrated in Figure 1. A reflector 130 is disposed in and lines the aperture 115 to guide and manage the emitted light between the light emitting diodes 150, 155 and the lens 120. In some embodiments, an upper lens (not illustrated) replaces the reflector 130.

The light emitting diodes 150, 155 are mounted on a substrate 125, for example a circuit board, and form part of a circuit 200. In the illustrated embodiment, the light emitting diodes 150, 155 are interspersed. In other embodiments, the light emitting diodes 150, 155 may be separated from one another or spatially segregated according to color temperature or other appropriate parameter. As discussed in further detail below, the circuit 200 supplies electricity to the light emitting diodes 150, 155 with a level of flexibility that facilitates multiple configurations suited to different applications and installation parameters.

Turning to Figures 2, 3, and 4, some example embodiments of the circuit 200 will be discussed in further detail with example reference to the luminaire 100. The circuit 200 can be applied to other indoor and outdoor luminaires.

Referring now to Figure 2, this figure illustrates an embodiment of the circuit 200 in an example block diagram form. The circuit 200 comprises a DC power supply 205 for supplying electrical energy that the circuit 200 delivers to the light emitting diodes 150, 155. In an example embodiment, the circuit 200 comprises a light emitting diode driver.

The dual inline pin switch 131 comprises individual switches 210 that provide an input for configuring the luminaire 100 to operate at a selected color temperature. In the illustrated embodiment, the circuit 200 comprises two manual switches 210. Other embodiments may have fewer or more switches 210. In various embodiments, the switches 210 can be mounted to the housing 105 of the luminaire 100, for example within the housing 105 (as illustrated in Figure 1 and discussed above) or on an exterior surface

Menard v. Signify
Menard Exhibit 1022
Page 141

of the housing 105. In some embodiments, the switches 210 are mounted on the substrate 125. In some embodiments, the switches 210 are implemented via firmware or may be solid state.

As an alternative to the illustrated dual inline pin switch 131, the input can comprise multiple DIP switches, one or more single in-line pin packages (SIP or SIPP), one or more rocker switches, one or more reed switches, one or more magnetic switches, one or more rotary switches, one or more rotary dials, one or more selectors or selector switches, one or more slide switches, one or more snap switches, one or more thumbwheels, one or more toggles or toggle switches, one or more keys or keypads, or one or more buttons or pushbuttons, to mention a few representative examples without limitation.

As further discussed below, a controller 215 operates the light emitting diodes 150, 155 according to state of the switches 210. In some example embodiments, the controller 215 comprises logic implemented in digital circuitry, for example discrete digital components or integrated circuitry. In some example embodiments, the controller 215 utilizes microprocessor-implemented logic with instructions stored in firmware or other static or non-transitory memory.

In the illustrated embodiment, the outputs of the controller 215 are connected to two MOSFET transistors 160 to control electrical flow through two light emitting diodes 150, 155. The illustrated MOSFET transistors 160 provide one example and can be replaced with other appropriate current control devices or circuits in various embodiments. The switches 210 thus configure the luminaire 100 to operate with either or both of the light emitting diodes 150, 155. The light emitting diodes 150, 155 illustrated in Figure 2 may represent two single light emitting diodes or two groups of light emitting diodes, for example.

Figure 3 illustrates a representative table 300 describing operation of the circuit 100 according to some example embodiments. In the example of Figure 3, the light emitting diode 150 produces light having a color temperature of 3,000 Kelvin, and the light emitting diode 155 produces light having a color temperature of 4,000 Kelvin.

Menard v. Signify
Menard Exhibit 1022
Page 142

As shown in the example table 300, when both of the switches 210 are in the on state, the controller 215 causes the light emitting diode 155 to be off and the light emitting diode 150 to be on. Accordingly, the luminaire 100 emits illumination having a color temperature of 3,000 Kelvin.

When both of the switches 210 are in the off state, the controller 215 causes the light emitting diode 155 to be on and the light emitting diode 150 to be off. Accordingly, the luminaire 100 emits illumination having a color temperature of 4,000 Kelvin.

When one of the switches 210 is in the off state and the other of the switches 210 is on the on state, the controller 215 causes the light emitting diode 155 to be on and the light emitting diode 150 to be on. The luminaire 100 thus emits illumination having a color temperature of 3,500 Kelvin. In some other example embodiments, the controller 215 can adjust the light output of one or both of the light emitting diodes 150, 155 to set the color temperature to a specific value with the range of 3,000 to 4,000 Kelvin.

Accordingly, the controller 215 maps the four configurations of the two switches 210 to three states for configuring the two light emitting diodes 150, 155 for permanent or long-term operation. Mapping two switch configurations to a single mode of long-term operation can simplify configuration instructions and reduce errors during field configuration. The resulting configurations support multiple color temperatures of illumination from a single luminaire 100.

Some example embodiments support fewer or more than three states of illumination. For example, in one embodiment, the luminaire 100 comprises three strings of light emitting diodes 150 that have different color temperatures, such as 3,000 Kelvin, 2,700 Kelvin, and 4,000 Kelvin. In this example, in addition to the states illustrated in Figure 3 and discussed above, the switching logic can support a fourth state in which only the 2,700 Kelvin string is on.

Figure 4 illustrates a schematic of an example embodiment of the circuit 200. The schematic of Figure 4 provides one example implementation of the block diagram illustrated in Figure 3.

As illustrated in Figure 4 in schematic form, the circuit 200 conforms to the foregoing discussion of the block diagram format of Figure 3. In Figure 4, the light

Menard v. Signify
Menard Exhibit 1022
Page 143

emitting diodes 150, 155 of Figure 3 are respectively represented with groups of light emitting diodes 150, 155. Additionally, the schematic details include a thermal protective switch 305 for guarding against overheating. Figure 4 thus provides one example schematic for an embodiment of the electrical system of the luminaire 100 illustrated in Figure 1 and discussed above.

As will be appreciated by those of ordinary skill, the textual and illustrated disclosure provided herein supports a wide range of embodiments and implementations. In some non-limiting example embodiments of the disclosure, a luminaire can comprise: a housing; a substrate disposed in the housing; a first plurality of light emitting diodes that are mounted to the substrate and that have a first color temperature; a second plurality of light emitting diodes that are mounted to the substrate and that have a second color temperature; and a plurality of manual switches that are disposed at the housing for permanently configuring the luminaire to: provide illumination of the first color temperature by enabling the first plurality of light emitting diodes; provide illumination of the second color temperature by enabling the second plurality of light emitting diodes; and provide illumination of a third color temperature that is between the first color temperature and the second color temperature by enabling the first plurality of light emitting diodes and the second plurality of light emitting diodes.

In some example embodiments of the luminaire, the housing can comprise an aperture that is configured for emitting area illumination, and the substrate is oriented to emit light through the aperture. In some example embodiments of the luminaire, the plurality of manual switches are mounted to the substrate. In some example embodiments of the luminaire, the plurality of manual switches are mounted in the housing. In some example embodiments of the luminaire, the plurality of manual switches are mounted to the housing. In some example embodiments of the luminaire, the plurality of manual switches comprise a dual inline pin (DIP) switch. In some example embodiments of the luminaire, the plurality of manual switches provide two switch states, and each of the two switch states provides illumination of the third color temperature by enabling the first plurality of light emitting diodes and the second plurality of light emitting diodes. In some example embodiments of the luminaire, the housing is circular and comprises a lip configured for extending around an aperture in a

Menard v. Signify
Menard Exhibit 1022
Page 144

ceiling. In some example embodiments of the luminaire, the housing comprises a wiring port disposed on a side of the housing. In some example embodiments of the luminaire, the housing comprises a light-emitting aperture in which the substrate is disposed. In some example embodiments, the luminaire further comprises: an aperture disposed at a lower side of the housing; a lens disposed at the aperture for refracting light emitted by the first and second light emitting diodes; and a reflector that is disposed between the lens and the light emitting diodes and that is operative to reflect light between the first and second light emitting diodes and the lens. In some example embodiments of the luminaire, the housing is circular and comprises a lip configured for extending around an aperture in a ceiling. In some example embodiments of the luminaire, the housing comprises a wiring port disposed on a side of the housing. In some example embodiments of the luminaire, the housing forms a cavity associated with the aperture. In some example embodiments of the luminaire, the first and second light source are mounted to a substrate that is disposed at an end of the cavity. In some example embodiments, the luminaire further comprises a reflector that is disposed in the cavity between the lens and the first and second light sources, the reflector operative to reflect light between the first and second light sources and the lens.

Technology for providing a configurable a luminaire has been described. Many modifications and other embodiments of the disclosures set forth herein will come to mind to one skilled in the art to which these disclosures pertain having the benefit of the teachings presented in the foregoing descriptions and the associated drawings. Therefore, it is to be understood that the disclosures are not to be limited to the specific embodiments disclosed and that modifications and other embodiments are intended to be included within the scope of this application. Although specific terms are employed herein, they are used in a generic and descriptive sense only and not for purposes of limitation.

Menard v. Signify
Menard Exhibit 1022
Page 145

CONFIGURABLE LIGHTING SYSTEM

CROSS REFERENCE TO RELATED APPLICATIONS

This application claims priority to U.S. Provisional Patent Application Number 62/297,424 filed February 19, 2016 in the name of Steven Walter Pyshos and Raymond Janik and entitled "Configurable Lighting System," the entire contents of which are hereby incorporated herein by reference.

TECHNICAL FIELD

Embodiments of the technology relate generally to lighting systems and more specifically to lighting systems that can be readily configured to produce illumination of different color temperatures.

BACKGROUND

For illumination applications, light emitting diodes (LEDs) offer substantial potential benefit associated with their energy efficiency, light quality, and compact size. However, to realize the full potential benefits offered by light emitting diodes, new technologies are needed.

With luminaires that incorporate incandescent or fluorescent technology, some flexibility can be obtained by swapping lamps to meet user preferences. In such luminaires, lamp selection can provide flexibility in terms of correlated color temperature (CCT or color temperature) and light output (lumen output). For example, a compact fluorescent downlight might accept 6-, 32-, and 42-watt lamps in 2700, 3000, and 3500 ~~degrees~~ K CCT. Additionally, changing lamp position and focal point in a reflector of an incandescent or fluorescent fixture can change the fixture spacing criteria (SC) of a luminaire.

In contrast, conventional light-emitting-diode-based luminaires typically offer reduced flexibility when the luminaire's light-emitting-diode-based light source is permanently attached to the luminaire. Stocking conventional light-emitting-diode-based luminaires at distribution to accommodate multiple configurations that users may desire can entail maintaining a relatively large or cumbersome inventory.

Need is apparent for a technology to provide a light emitting diode system that can adapt to various applications, for example by delivering multiple color temperatures, multiple lumens, and/or multiple photometric distributions. Need further exists for a capability to enable a single luminaire to be stocked at distribution and then quickly configured according to application parameters and deployment dictates. Need further ~~exits~~ exists for luminaires that are both energy efficient and flexible. A capability addressing one or more such needs, or some other related deficiency in the art, would support improved illumination systems and more widespread utilization of light emitting diodes in lighting applications.

SUMMARY

In some aspects of the disclosure, a system can configure a luminaire for providing illumination of a selected color temperature, a selected lumen output, or a selected photometric distribution based on an input. The input may be field selectable or may be selectable at a distribution center or at a late stage of luminaire manufacture, for example.

In some aspects of the disclosure, the luminaire can comprise at least two light sources having different color temperatures. In a first configuration, the luminaire can produce illumination of a first color temperature using a first one of the light sources. In a second configuration, the luminaire can produce illumination of a second color temperature using a second one of the light sources. In a third configuration, the luminaire can produce illumination of a third color temperature using both of the first and second the light sources. The third color temperature may be between the first and second color temperatures. The value of the third color temperature within a range between the first and second color temperatures can be controlled by manipulating the

Menard v. Signify
Menard Exhibit 1022
Page 147

relative amounts of light output by the first and second light sources. That is, adjusting the lumen outputs of the first and second light sources can define the color temperature of the illumination produced by the luminaire in the third configuration.

In some aspects of the disclosure, the luminaire can comprise at least two light sources having different lumen outputs. In a first configuration, the luminaire can produce illumination of a first lumen output using a first one of the light sources. In a second configuration, the luminaire can produce illumination of a second lumen output using a second one of the light sources. In a third configuration, the luminaire can produce illumination of a third lumen output using both of the first and second light sources.

In some aspects of the disclosure, the luminaire can comprise at least two light sources having different photometric distributions. In a first configuration, the luminaire can produce illumination of a first photometric distribution using a first one of the light sources. In a second configuration, the luminaire can produce illumination of a second photometric distribution using a second one of the light sources. In a third configuration, the luminaire can produce illumination of a third photometric distribution using both of the first and second light sources.

In some aspects of the disclosure, a circuit and an associated input to the circuit can configure a luminaire for providing illumination having a selected property, for example a selected color temperature, a selected lumen output, or a selected photometric distribution. The input can be settable to a first number of states. The circuit can map the first number of states into a second number of states that is less than the first number of states. For example, the input can have four states and the circuit can map these four states into three states. The three states can correspond to three different values of the illumination property, for example three different color temperatures, three different lumen outputs, or three different photometric distributions.

The foregoing discussion of controlling illumination is for illustrative purposes only. Various aspects of the present disclosure may be more clearly understood and appreciated from a review of the following text and by reference to the associated drawings and the claims that follow. Other aspects, systems, methods, features,

Menard v. Signify
Menard Exhibit 1022
Page 148

advantages, and objects of the present disclosure will become apparent to one with skill in the art upon examination of the following drawings and text. It is intended that all such aspects, systems, methods, features, advantages, and objects are to be included within this description and covered by this application and by the appended claims of the application.

BRIEF DESCRIPTION OF THE DRAWINGS

Figures 1A, 1B, 1C, 1D, 1E, 1F, 1G, 1H, 1I, 1J, and 1K (collectively Figure 1) illustrate views of a luminaire in accordance with some example embodiments of the disclosure.

Figure 2 illustrates a functional block diagram of a circuit that a luminaire can comprise in accordance with some example embodiments of the disclosure.

Figure 3 illustrates a state table for a circuit that a luminaire can comprise in accordance with some example embodiments of the disclosure.

Figure 4 illustrates a schematic of a circuit that a luminaire can comprise in accordance with some example embodiments of the disclosure.

Many aspects of the disclosure can be better understood with reference to the above drawings. The drawings illustrate only example embodiments and are therefore not to be considered limiting of the embodiments described, as other equally effective embodiments are within the scope and spirit of this disclosure. The elements and features shown in the drawings are not necessarily drawn to scale, emphasis instead being placed upon clearly illustrating principles of the embodiments. Additionally, certain dimensions or positionings may be exaggerated to help visually convey certain principles. In the drawings, similar reference numerals among different figures designate like or corresponding, but not necessarily identical, elements.

Menard v. Signify
Menard Exhibit 1022
Page 149

DESCRIPTION OF EXAMPLE EMBODIMENTS

In some example embodiments of the disclosure, a luminaire can comprise multiple groups of light emitting diodes of different color temperatures and a constant current power supply for powering the light emitting diodes. The power supply can utilize a switching scheme that can turn each group of light emitting diodes on and off to change the color temperature of the luminaire. In some example embodiments, the power supply can further vary the relative intensities of the light emitting diodes to manipulate the color temperature of the luminaire within a range.

For example, the luminaire can comprise a 3,000 ~~degrees~~ K group of light emitting diodes and a 4,000 ~~degrees~~ K group of light emitting diodes. When only the 3,000 ~~degrees~~ K group is on, the luminaire can deliver 3,000 ~~degrees~~ K illumination. When only the 4,000 ~~degrees~~ K group is on, the luminaire can deliver 4,000 ~~degrees~~ K illumination. When the 3,000 ~~degrees~~ K group and the 4,000 ~~degrees~~ K group are both on, the luminaire can deliver 3,500 ~~degrees~~ K illumination. If the 4,000 ~~degree~~ K group of light emitting diodes is concurrently operated at a low lumen output and the 3,000 ~~degree~~ K group is operated at a high lumen output, the luminaire may deliver illumination of another selected color temperature, for example 3,100 ~~degrees~~ K.

In some example embodiments, a controller can adjust lumen output automatically to maintain constant delivered lumens across multiple color temperatures or to ~~suite~~ suit application requirements. The controller ~~implement~~ implements the adjustment utilizing programmable driver current and/or via turning on and off various groups of light emitting diodes. Configurable color temperature or lumen output can function in combination with integral dimming, for example to facilitate interface with building automation, sensors, and dimmers.

In some example embodiments, luminaires can achieve an additional level of flexible configuration at a distribution center using interchangeable optics. For example, primary optics can provide medium distribution (e.g. spacing criteria equals 1.0), while a diffuser or concentrator lens can be used to achieve wide distribution (e.g. spacing criteria equals 1.4), and narrow distribution (e.g. spacing criteria equals 0.4).

Menard v. Signify
Menard Exhibit 1022
Page 150

In some example embodiments, a luminaire's configuration of delivered lumens and color temperatures can be set at the factory, at distribution, or in the field. To meet current and emerging code compliance, performance markings on a luminaire can indicate and correspond to the desired setting. Economical, field-installed nameplates can identify the various electrical and optical performance ratings and, when installed, permanently program the delivered lumens and color temperature. Other settings, such as dimming protocols, can likewise be configured. The interface between the nameplate and internal logic can use mechanical, electrical or optical means, for example.

Accordingly, in some embodiments of the disclosure, the technology provides product markings and supports regulatory compliance. For example, nameplates can indicate energy codes and rebate opportunities, for compliance with product labeling and to facilitate compliance confirmation by local authorities who may have jurisdiction.

Some representative embodiments will be further described hereinafter with example reference to the accompanying drawings that describe representative embodiments of the present technology. In the drawings, Figure 1 illustrates views of a representative luminaire 100; Figure 2 illustrates a functional block diagram of a representative circuit 200 that the luminaire 100 can comprise; Figure 3 illustrates a representative state table for the circuit 200; and Figure 4 illustrates a representative schematic for the circuit 200. The technology may, however, be embodied in many different forms and should not be construed as limited to the embodiments set forth herein; rather, these embodiments are provided so that this disclosure will be thorough and complete, and will fully convey the scope of the technology to those appropriately skilled in the art.

Referring now to Figure 1, multiple views of the luminaire 100 are shown. Figure 1A illustrates a side perspective view of the luminaire 100. Figure 1B illustrates a top perspective view of the luminaire 100. Figure 1C illustrates a view of the light-emitting bottom of the luminaire 100, showing a lens 120 in a light-emitting aperture 115 of the luminaire 100. Figure 1D illustrates a view of the light-emitting bottom of the luminaire 100 with the lens 120 removed from the light-emitting aperture 115 of the luminaire. Figure 1E illustrates a view of the light-emitting bottom of the luminaire 100 with the

Menard v. Signify
Menard Exhibit 1022
Page 151

lens 120 and an associated reflector 130 removed from the light-emitting aperture 115 of the luminaire. Figure 1F illustrates a cutaway perspective view of the luminaire 100. Figure 1G illustrates another cutaway perspective view of the luminaire 100. Figure 1H illustrates another cutaway view of the luminaire 100. Figures 1I, 1J, and 1K provide detailed views of a portion of the luminaire 100 comprising a cover 126 and an associated access aperture 129 for providing internal access to the luminaire 100. In Figure 1I, the cover 126 is fully removed. In Figure 1J, the cover 126 is positioned adjacent the access aperture 129, for example in connection with attachment or removal of the cover 126. In Figure 1K, the cover 126 is attached to the luminaire 100.

As best seen in the views of Figures 1A and 1B, the illustrated example luminaire 100 is suited for inserting in an aperture in a ceiling to provide overhead lighting. In this example embodiment, the luminaire 100 can be characterized as an overhead light or a recessed ceiling light. Various other indoor and outdoor luminaires that may be mounted in a wide range of orientations can be substituted for the luminaire 100 illustrated in Figure 1.

The illustrated example luminaire 100 of Figure 1 comprises a housing 105 that is circular with a protruding rim ~~100~~ <u>110</u> that extends circumferentially about the housing 105. When the luminaire 100 is installed in a ceiling aperture, the rim 100 circumscribes and covers the edge of the ceiling aperture for aesthetics, for support, and for blocking of debris from above the ceiling. Hanger clips 102 hold the luminaire 100 in place in installation.

As best illustrated in Figures 1I, 1J, and 1K, the example luminaire 100 comprises an access aperture 129 and an associated cover 126. The access aperture 129 provides access to the interior of the luminaire housing 105, for example in the field and/or during luminaire installation. An installer can remove the cover 126 and manually set a dual inline pin (DIP) switch 131 to configure the luminaire 100 for long-term operation providing illumination with a selected color temperature, a selected lumen output, and/or a selected photometric distribution. As illustrated, the dual inline pin switch 131 is mounted on a circuit board adjacent the access aperture 129, thereby facilitating convenient and efficient access in the field or at a distribution center, for example.

An electrical cable 127 extends through a wiring aperture 103 in the cover 126. The electrical cable 127 terminates in a plug 132 that mates with a receptacle 133 that is mounted inside the housing 105 adjacent the access aperture 129 for convenient field access.

As illustrated, the example cover 126 comprises two notches 123, 124 that each receives a respective screw 128 for holding the cover 126 in place. The notch 123 is disposed on the right side of the cover 126 and is sized to receive one of the screws 128. Meanwhile, the notch 124 is disposed on a left side of the cover 126 and is sized to receive the other screw 128.

The left notch 124 and the right notch 123 are oriented so that the cover 126 is rotatable about the right screw 128 when the right screw 128 is loosely disposed in the right notch 123. In other words, cover rotation can occur when the right screw 128 is in the right notch 123 with threads engaged but prior to tightening. In this position, the cover 126 can rotate clockwise about the right screw 128. Thus, the right screw 128 provides an axis of rotation for the cover 126. This clockwise rotation facilitates convenient manipulation of the cover 126 by a person working the cover 126 to cover the access aperture 129, with the screws 128 engaged but not fully tightened. The clockwise rotation of the cover 126 about the right screw 128 provides the person with a capability to slide the left notch 124 of the cover 126 conveniently under the head of the left screw 128. Once the cover 126 is rotated so the left notch 124 is under the head of the left screw 128, the person (for example an installer) can tighten the two screws 128 to secure the cover 126.

To remove the cover 126, the person loosens the two screws 128 and then rotates the cover 126 counterclockwise about the right screw 128 so that the left notch 124 moves out from under the head of the left screw 128. Once the left notch 124 is free from the left screw 128, the installer can pull the right notch 123 out from under the right screw 128 to fully remove the cover 126.

As best seen in the views of Figures 1A, 1C, 1F, and 1G, the lens 120 of the luminaire 100 is positioned adjacent the lower, exit side of the light-emitting aperture 115. As illustrated, the lens 120 can mix and blend light emitted by two groups of light

Menard v. Signify
Menard Exhibit 1022
Page 153

emitting diodes 150, 155, with each group having a different color temperature. In some embodiments, the two groups of light emitting diodes 150, 155 may have color temperatures that differ by at least 500 ~~degrees~~ Kelvin, for example. The group of light emitting diodes 150 can be characterized as one light emitting diode light source, while the group of light emitting diodes 155 can be characterized as another light emitting diode light source. Other embodiments of a light emitting diode light source may have a single light emitting diode or more light emitting diodes than the embodiment illustrated in Figure 1. A reflector 130 is disposed in and lines the aperture 115 to guide and manage the emitted light between the light emitting diodes 150, 155 and the lens 120. In some embodiments, an upper lens (not illustrated) replaces the reflector 130.

The light emitting diodes 150, 155 are mounted on a substrate 125, for example a circuit board, and form part of a circuit 200. In the illustrated embodiment, the light emitting diodes 150, 155 are interspersed. In other embodiments, the light emitting diodes 150, 155 may be separated from one another or spatially segregated according to color temperature or other appropriate parameter. As discussed in further detail below, the circuit 200 supplies electricity to the light emitting diodes 150, 155 with a level of flexibility that facilitates multiple configurations suited to different applications and installation parameters.

Turning to Figures 2, 3, and 4, some example embodiments of the circuit 200 will be discussed in further detail with example reference to the luminaire 100. The circuit 200 can be applied to other indoor and outdoor luminaires.

Referring now to Figure 2, this figure illustrates an embodiment of the circuit 200 in an example block diagram form. The circuit 200 comprises a DC power supply 205 for supplying electrical energy that the circuit 200 delivers to the light emitting diodes 150, 155. In an example embodiment, the circuit 200 comprises a light emitting diode driver.

The dual inline pin switch 131 comprises individual switches 210 that provide an input for configuring the luminaire 100 to operate at a selected color temperature. In the illustrated embodiment, the circuit 200 comprises two manual switches 210. Other embodiments may have fewer or more switches 210. In various embodiments, the

Menard v. Signify
Menard Exhibit 1022
Page 154

switches 210 can be mounted to the housing 105 of the luminaire 100, for example within the housing 105 (as illustrated in Figure 1 and discussed above) or on an exterior surface of the housing 105. In some embodiments, the switches 210 are mounted on the substrate 125. In some embodiments, the switches 210 are implemented via firmware or may be solid state.

As an alternative to the illustrated dual inline pin switch 131, the input can comprise multiple DIP switches, one or more single in-line pin packages (SIP or SIPP), one or more rocker switches, one or more reed switches, one or more magnetic switches, one or more rotary switches, one or more rotary dials, one or more selectors or selector switches, one or more slide switches, one or more snap switches, one or more thumbwheels, one or more toggles or toggle switches, one or more keys or keypads, or one or more buttons or pushbuttons, to mention a few representative examples without limitation.

As further discussed below, a controller 215 operates the light emitting diodes 150, 155 according to state of the switches 210. In some example embodiments, the controller 215 comprises logic implemented in digital circuitry, for example discrete digital components or integrated circuitry. In some example embodiments, the controller 215 utilizes microprocessor-implemented logic with instructions stored in firmware or other static or non-transitory memory.

In the illustrated embodiment, the outputs of the controller 215 are connected to two MOSFET transistors 160 to control electrical flow through two light emitting diodes 150, 155. The illustrated MOSFET transistors 160 provide one example and can be replaced with other appropriate current control devices or circuits in various embodiments. The switches 210 thus configure the luminaire 100 to operate with either or both of the light emitting diodes 150, 155. The light emitting diodes 150, 155 illustrated in Figure 2 may represent two single light emitting diodes or two groups of light emitting diodes, for example.

Figure 3 illustrates a representative table 300 describing operation of the circuit 100 according to some example embodiments. In the example of Figure 3, the light emitting diode 150 produces light having a color temperature of 3,000 ~~degrees~~ Kelvin,

Menard v. Signify
Menard Exhibit 1022
Page 155

and the light emitting diode 155 produces light having a color temperature of 4,000 ~~degrees~~ Kelvin.

As shown in the example table 300, when both of the switches 210 are in the on state, the controller 215 causes the light emitting diode 155 to be off and the light emitting diode 150 to be on. Accordingly, the luminaire 100 emits illumination having a color temperature of 3,000 ~~degrees~~ Kelvin.

When both of the switches 210 are in the off state, the controller 215 causes the light emitting diode 155 to be on and the light emitting diode 150 to be off. Accordingly, the luminaire 100 emits illumination having a color temperature of 4,000 ~~degrees~~ Kelvin.

When one of the switches 210 is in the off state and the other of the switches 210 is on the on state, the controller 215 causes the light emitting diode 155 to be on and the light emitting diode 150 to be on. The luminaire 100 thus emits illumination having a color temperature of 3,500 ~~degrees~~ Kelvin. In some other example embodiments, the controller 215 can adjust the light output of one or both of the light emitting diodes 150, 155 to set the color temperature to a specific value with the range of 3,000 to 4,000 ~~degrees~~ Kelvin.

Accordingly, the controller 215 maps the four configurations of the two switches 210 to three states for configuring the two light emitting diodes 150, 155 for permanent or long-term operation. Mapping two switch configurations to a single mode of long-term operation can simplify configuration instructions and reduce errors during field configuration. The resulting configurations support multiple color temperatures of illumination from a single luminaire 100.

Some example embodiments support fewer or more than three states of illumination. For example, in one embodiment, the luminaire 100 comprises three strings of light emitting diodes 150 that have different color temperatures, such as 3,000 ~~degrees~~ Kelvin, 2,700 ~~degrees~~ Kelvin, and 4,000 ~~degrees~~ Kelvin. In this example, in addition to the states illustrated in Figure 3 and discussed above, the switching logic can support a fourth state in which only the 2,700 ~~2,7000~~ ~~degrees~~ Kelvin string is on.

Menard v. Signify
Menard Exhibit 1022
Page 156

Figure 4 illustrates a schematic of an example embodiment of the circuit 200. The schematic of Figure 4 provides one example implementation of the block diagram illustrated in Figure 3.

As illustrated in Figure 4 in schematic form, the circuit 200 conforms to the foregoing discussion of the block diagram format of Figure 3. In Figure 4, the light emitting diodes 150, 155 of Figure 3 are respectively represented with groups of light emitting diodes 150, 155. Additionally, the schematic details include a thermal protective switch 305 for guarding against overheating. Figure 4 thus provides one example schematic for an embodiment of the electrical system of the luminaire 100 illustrated in Figure 1 and discussed above.

As will be appreciated by those of ordinary skill, the textual and illustrated disclosure provided herein supports a wide range of embodiments and implementations. In some non-limiting example embodiments of the disclosure, a luminaire can comprise: a housing; a substrate disposed in the housing; a first plurality of light emitting diodes that are mounted to the substrate and that have a first color temperature; a second plurality of light emitting diodes that are mounted to the substrate and that have a second color temperature; and a plurality of manual switches that are disposed at the housing for permanently configuring the luminaire to: provide illumination of the first color temperature by enabling the first plurality of light emitting diodes; provide illumination of the second color temperature by enabling the second plurality of light emitting diodes; and provide illumination of a third color temperature that is between the first color temperature and the second color temperature by enabling the first plurality of light emitting diodes and the second plurality of light emitting diodes.

In some example embodiments of the luminaire, the housing can comprise an aperture that is configured for emitting area illumination, and the substrate is oriented to emit light through the aperture. In some example embodiments of the luminaire, the plurality of manual switches are mounted to the substrate. In some example embodiments of the luminaire, the plurality of manual switches are mounted in the housing. In some example embodiments of the luminaire, the plurality of manual switches are mounted to the housing. In some example embodiments of the luminaire, the plurality of manual switches comprise a dual inline pin (DIP) switch. In some

Menard v. Signify
Menard Exhibit 1022
Page 157

example embodiments of the luminaire, the plurality of manual switches provide two switch states, and each of the two switch states provides illumination of the third color temperature by enabling the first plurality of light emitting diodes and the second plurality of light emitting diodes. In some example embodiments of the luminaire, the housing is circular and comprises a lip configured for extending around an aperture in a ceiling. In some example embodiments of the luminaire, the housing comprises a wiring port disposed on a side of the housing. In some example embodiments of the luminaire, the housing comprises a light-emitting aperture in which the substrate is disposed. In some example embodiments, the luminaire further comprises: an aperture disposed at a lower side of the housing; a lens disposed at the aperture for refracting light emitted by the first and second light emitting diodes; and a reflector that is disposed between the lens and the light emitting diodes and that is operative to reflect light between the first and second light emitting diodes and the lens. In some example embodiments of the luminaire, the housing is circular and comprises a lip configured for extending around an aperture in a ceiling. In some example embodiments of the luminaire, the housing comprises a wiring port disposed on a side of the housing. In some example embodiments of the luminaire, the housing forms a cavity associated with the aperture. In some example embodiments of the luminaire, the first and second light source are mounted to a substrate that is disposed at an end of the cavity. In some example embodiments, the luminaire further comprises a reflector that is disposed in the cavity between the lens and the first and second light sources, the reflector operative to reflect light between the first and second light sources and the lens.

Technology for providing a configurable a luminaire has been described. Many modifications and other embodiments of the disclosures set forth herein will come to mind to one skilled in the art to which these disclosures pertain having the benefit of the teachings presented in the foregoing descriptions and the associated drawings. Therefore, it is to be understood that the disclosures are not to be limited to the specific embodiments disclosed and that modifications and other embodiments are intended to be included within the scope of this application. Although specific terms are employed herein, they are used in a generic and descriptive sense only and not for purposes of limitation.

Menard v. Signify
Menard Exhibit 1022
Page 158

Electronic Acknowledgement Receipt

EFS ID:	30167730
Application Number:	15435141
International Application Number:	
Confirmation Number:	2406
Title of Invention:	Configurable Lighting System
First Named Inventor/Applicant Name:	Steven Walter Pyshos
Customer Number:	91764
Filer:	Robert Timothy Neufeld
Filer Authorized By:	
Attorney Docket Number:	13682.225908
Receipt Date:	23-AUG-2017
Filing Date:	16-FEB-2017
Time Stamp:	20:24:48
Application Type:	Utility under 35 USC 111(a)

Payment information:

Submitted with Payment	no

File Listing:

Document Number	Document Description	File Name	File Size(Bytes)/ Message Digest	Multi Part /.zip	Pages (if appl.)
1	Supplemental Response or Supplemental Amendment	Supp_Resp_225908.pdf	131740 84fdd0fc90eee0c89b0398bd1cc5aa2713e6f8c6	no	11

Warnings:

Information:					
2	Specification	Subst_Spec_Clean_225908.pdf	117087 1a461a608beb3549712d6da1b69cdebdcb51dcfc	no	13
Warnings:					
Information:					
3	Specification	Subst_Spec_Marked_225908.pdf	117631 c523de31133cbe954b031086f7646c373972387c	no	13
Warnings:					
Information:					
			Total Files Size (in bytes):	366458	

This Acknowledgement Receipt evidences receipt on the noted date by the USPTO of the indicated documents, characterized by the applicant, and including page counts, where applicable. It serves as evidence of receipt similar to a Post Card, as described in MPEP 503.

New Applications Under 35 U.S.C. 111
If a new application is being filed and the application includes the necessary components for a filing date (see 37 CFR 1.53(b)-(d) and MPEP 506), a Filing Receipt (37 CFR 1.54) will be issued in due course and the date shown on this Acknowledgement Receipt will establish the filing date of the application.
National Stage of an International Application under 35 U.S.C. 371
If a timely submission to enter the national stage of an international application is compliant with the conditions of 35 U.S.C. 371 and other applicable requirements a Form PCT/DO/EO/903 indicating acceptance of the application as a national stage submission under 35 U.S.C. 371 will be issued in addition to the Filing Receipt, in due course.
New International Application Filed with the USPTO as a Receiving Office
If a new international application is being filed and the international application includes the necessary components for an international filing date (see PCT Article 11 and MPEP 1810), a Notification of the International Application Number and of the International Filing Date (Form PCT/RO/105) will be issued in due course, subject to prescriptions concerning national security, and the date shown on this Acknowledgement Receipt will establish the international filing date of the application.

PTO/SB/06 (09-11)
Approved for use through 1/31/2014. OMB 0651-0032
U.S. Patent and Trademark Office; U.S. DEPARTMENT OF COMMERCE
Under the Paperwork Reduction Act of 1995, no persons are required to respond to a collection of information unless it displays a valid OMB control number.

PATENT APPLICATION FEE DETERMINATION RECORD Substitute for Form PTO-875	Application or Docket Number 15/435,141	Filing Date 02/16/2017	☐ To be Mailed

ENTITY: ☑ LARGE ☐ SMALL ☐ MICRO

APPLICATION AS FILED - PART I

FOR	(Column 1) NUMBER FILED	(Column 2) NUMBER EXTRA		RATE ($)	FEE ($)
☐ BASIC FEE (37 CFR 1.16(a), (b), or (c))	N/A	N/A		N/A	
☐ SEARCH FEE (37 CFR 1.16(k), (i), or (m))	N/A	N/A		N/A	
☐ EXAMINATION FEE (37 CFR 1.16(o), (p), or (q))	N/A	N/A		N/A	
TOTAL CLAIMS (37 CFR 1.16(i))	minus 20 =	*		x $80 =	
INDEPENDENT CLAIMS (37 CFR 1.16(h))	minus 3 =	*		x $420 =	
☐ APPLICATION SIZE FEE (37 CFR 1.16(s))	If the specification and drawings exceed 100 sheets of paper, the application size fee due is $310 ($155 for small entity) for each additional 50 sheets or fraction thereof. See 35 U.S.C. 41(a)(1)(G) and 37 CFR 1.16(s).				
☐ MULTIPLE DEPENDENT CLAIM PRESENT (37 CFR 1.16(j))					
* If the difference in column 1 is less than zero, enter "0" in column 2.				TOTAL	

APPLICATION AS AMENDED - PART II

AMENDMENT		(Column 1) CLAIMS REMAINING AFTER AMENDMENT		(Column 2) HIGHEST NUMBER PREVIOUSLY PAID FOR	(Column 3) PRESENT EXTRA		RATE ($)	ADDITIONAL FEE ($)
	08/23/2017							
	Total (37 CFR 1.16(i))	* 20	Minus	** 20	= 0		x $80 =	0
	Independent (37 CFR 1.16(h))	* 3	Minus	*** 3	= 0		x $420 =	0
	☐ Application Size Fee (37 CFR 1.16(s))							
	☐ FIRST PRESENTATION OF MULTIPLE DEPENDENT CLAIM (37 CFR 1.16(j))							
							TOTAL ADD'L FEE	0

AMENDMENT		(Column 1) CLAIMS REMAINING AFTER AMENDMENT		(Column 2) HIGHEST NUMBER PREVIOUSLY PAID FOR	(Column 3) PRESENT EXTRA		RATE ($)	ADDITIONAL FEE ($)
	Total (37 CFR 1.16(i))	*	Minus	**	=		x $0 =	
	Independent (37 CFR 1.16(h))	*	Minus	***	=		x $0 =	
	☐ Application Size Fee (37 CFR 1.16(s))							
	☐ FIRST PRESENTATION OF MULTIPLE DEPENDENT CLAIM (37 CFR 1.16(j))							
							TOTAL ADD'L FEE	

* If the entry in column 1 is less than the entry in column 2, write "0" in column 3.	LIE
** If the "Highest Number Previously Paid For" IN THIS SPACE is less than 20, enter "20".	paul M stanback
*** If the "Highest Number Previously Paid For" IN THIS SPACE is less than 3, enter "3".	
The "Highest Number Previously Paid For" (Total or Independent) is the highest number found in the appropriate box in column 1.	

This collection of information is required by 37 CFR 1.16. The information is required to obtain or retain a benefit by the public which is to file (and by the USPTO to process) an application. Confidentiality is governed by 35 U.S.C. 122 and 37 CFR 1.14. This collection is estimated to take 12 minutes to complete, including gathering, preparing, and submitting the completed application form to the USPTO. Time will vary depending upon the individual case. Any comments on the amount of time you require to complete this form and/or suggestions for reducing this burden, should be sent to the Chief Information Officer, U.S. Patent and Trademark Office, U.S. Department of Commerce, P.O. Box 1450, Alexandria, VA 22313-1450. DO NOT SEND FEES OR COMPLETED FORMS TO THIS ADDRESS. **SEND TO: Commissioner for Patents, P.O. Box 1450, Alexandria, VA 22313-1450.**

If you need assistance in completing the form, call 1-800-PTO-9199 and select option 2.

UNITED STATES PATENT AND TRADEMARK OFFICE

UNITED STATES DEPARTMENT OF COMMERCE
United States Patent and Trademark Office
Address: COMMISSIONER FOR PATENTS
P.O. Box 1450
Alexandria, Virginia 22313-1450
www.uspto.gov

NOTICE OF ALLOWANCE AND FEE(S) DUE

91764 7590 09/15/2017
King & Spalding LLP (Eaton/Cooper)
ATTN: IP Docketing Department
1100 Louisiana Street, Suite 4000
Houston, TX 77002-5213

EXAMINER
VU, JIMMY T

ART UNIT	PAPER NUMBER
2844	

DATE MAILED: 09/15/2017

APPLICATION NO.	FILING DATE	FIRST NAMED INVENTOR	ATTORNEY DOCKET NO.	CONFIRMATION NO.
15/435,141	02/16/2017	Steven Walter Pyshos	13682.225908	2406

TITLE OF INVENTION: CONFIGURABLE LIGHTING SYSTEM

APPLN. TYPE	ENTITY STATUS	ISSUE FEE DUE	PUBLICATION FEE DUE	PREV. PAID ISSUE FEE	TOTAL FEE(S) DUE	DATE DUE
nonprovisional	UNDISCOUNTED	$960	$0	$0	$960	12/15/2017

THE APPLICATION IDENTIFIED ABOVE HAS BEEN EXAMINED AND IS ALLOWED FOR ISSUANCE AS A PATENT. PROSECUTION ON THE MERITS IS CLOSED. THIS NOTICE OF ALLOWANCE IS NOT A GRANT OF PATENT RIGHTS. THIS APPLICATION IS SUBJECT TO WITHDRAWAL FROM ISSUE AT THE INITIATIVE OF THE OFFICE OR UPON PETITION BY THE APPLICANT. SEE 37 CFR 1.313 AND MPEP 1308.

THE ISSUE FEE AND PUBLICATION FEE (IF REQUIRED) MUST BE PAID WITHIN THREE MONTHS FROM THE MAILING DATE OF THIS NOTICE OR THIS APPLICATION SHALL BE REGARDED AS ABANDONED. THIS STATUTORY PERIOD CANNOT BE EXTENDED. SEE 35 U.S.C. 151. THE ISSUE FEE DUE INDICATED ABOVE DOES NOT REFLECT A CREDIT FOR ANY PREVIOUSLY PAID ISSUE FEE IN THIS APPLICATION. IF AN ISSUE FEE HAS PREVIOUSLY BEEN PAID IN THIS APPLICATION (AS SHOWN ABOVE), THE RETURN OF PART B OF THIS FORM WILL BE CONSIDERED A REQUEST TO REAPPLY THE PREVIOUSLY PAID ISSUE FEE TOWARD THE ISSUE FEE NOW DUE.

HOW TO REPLY TO THIS NOTICE:

I. Review the ENTITY STATUS shown above. If the ENTITY STATUS is shown as SMALL or MICRO, verify whether entitlement to that entity status still applies.

If the ENTITY STATUS is the same as shown above, pay the TOTAL FEE(S) DUE shown above.

If the ENTITY STATUS is changed from that shown above, on PART B - FEE(S) TRANSMITTAL, complete section number 5 titled "Change in Entity Status (from status indicated above)".

For purposes of this notice, small entity fees are 1/2 the amount of undiscounted fees, and micro entity fees are 1/2 the amount of small entity fees.

II. PART B - FEE(S) TRANSMITTAL, or its equivalent, must be completed and returned to the United States Patent and Trademark Office (USPTO) with your ISSUE FEE and PUBLICATION FEE (if required). If you are charging the fee(s) to your deposit account, section "4b" of Part B - Fee(s) Transmittal should be completed and an extra copy of the form should be submitted. If an equivalent of Part B is filed, a request to reapply a previously paid issue fee must be clearly made, and delays in processing may occur due to the difficulty in recognizing the paper as an equivalent of Part B.

III. All communications regarding this application must give the application number. Please direct all communications prior to issuance to Mail Stop ISSUE FEE unless advised to the contrary.

IMPORTANT REMINDER: Utility patents issuing on applications filed on or after Dec. 12, 1980 may require payment of maintenance fees. It is patentee's responsibility to ensure timely payment of maintenance fees when due.

PTOL-85 (Rev. 02/11)

Menard v. Signify
Menard Exhibit 1022
Page 162

PART B - FEE(S) TRANSMITTAL

Complete and send this form, together with applicable fee(s), to: Mail **Mail Stop ISSUE FEE**
Commissioner for Patents
P.O. Box 1450
Alexandria, Virginia 22313-1450
or Fax (571)-273-2885

INSTRUCTIONS: This form should be used for transmitting the ISSUE FEE and PUBLICATION FEE (if required). Blocks 1 through 5 should be completed where appropriate. All further correspondence including the Patent, advance orders and notification of maintenance fees will be mailed to the current correspondence address as indicated unless corrected below or directed otherwise in Block 1, by (a) specifying a new correspondence address; and/or (b) indicating a separate "FEE ADDRESS" for maintenance fee notifications.

CURRENT CORRESPONDENCE ADDRESS (Note: Use Block 1 for any change of address)

91764 7590 09/15/2017
King & Spalding LLP (Eaton/Cooper)
ATTN: IP Docketing Department
1100 Louisiana Street, Suite 4000
Houston, TX 77002-5213

Note: A certificate of mailing can only be used for domestic mailings of the Fee(s) Transmittal. This certificate cannot be used for any other accompanying papers. Each additional paper, such as an assignment or formal drawing, must have its own certificate of mailing or transmission.

Certificate of Mailing or Transmission
I hereby certify that this Fee(s) Transmittal is being deposited with the United States Postal Service with sufficient postage for first class mail in an envelope addressed to the Mail Stop ISSUE FEE address above, or being facsimile transmitted to the USPTO (571) 273-2885, on the date indicated below.

(Depositor's name)
(Signature)
(Date)

APPLICATION NO.	FILING DATE	FIRST NAMED INVENTOR	ATTORNEY DOCKET NO.	CONFIRMATION NO.
15/435,141	02/16/2017	Steven Walter Pyshos	13682.225908	2406

TITLE OF INVENTION: CONFIGURABLE LIGHTING SYSTEM

APPLN. TYPE	ENTITY STATUS	ISSUE FEE DUE	PUBLICATION FEE DUE	PREV. PAID ISSUE FEE	TOTAL FEE(S) DUE	DATE DUE
nonprovisional	UNDISCOUNTED	$960	$0	$0	$960	12/15/2017

EXAMINER	ART UNIT	CLASS-SUBCLASS
VU, JIMMY T	2844	315-294000

1. Change of correspondence address or indication of "Fee Address" (37 CFR 1.363).
❑ Change of correspondence address (or Change of Correspondence Address form PTO/SB/122) attached.
❑ "Fee Address" indication (or "Fee Address" Indication form PTO/SB/47; Rev 03-02 or more recent) attached. **Use of a Customer Number is required.**

2. For printing on the patent front page, list
(1) The names of up to 3 registered patent attorneys or agents OR, alternatively,
(2) The name of a single firm (having as a member a registered attorney or agent) and the names of up to 2 registered patent attorneys or agents. If no name is listed, no name will be printed.
1_____
2_____
3_____

3. ASSIGNEE NAME AND RESIDENCE DATA TO BE PRINTED ON THE PATENT (print or type)

PLEASE NOTE: Unless an assignee is identified below, no assignee data will appear on the patent. If an assignee is identified below, the document has been filed for recordation as set forth in 37 CFR 3.11. Completion of this form is NOT a substitute for filing an assignment.

(A) NAME OF ASSIGNEE (B) RESIDENCE: (CITY and STATE OR COUNTRY)

Please check the appropriate assignee category or categories (will not be printed on the patent) : ❑ Individual ❑ Corporation or other private group entity ❑ Government

4a. The following fee(s) are submitted:
❑ Issue Fee
❑ Publication Fee (No small entity discount permitted)
❑ Advance Order - # of Copies _____

4b. Payment of Fee(s): (**Please first reapply any previously paid issue fee shown above**)
❑ A check is enclosed.
❑ Payment by credit card. Form PTO-2038 is attached.
❑ The director is hereby authorized to charge the required fee(s), any deficiency, or credits any overpayment, to Deposit Account Number _____ (enclose an extra copy of this form).

5. **Change in Entity Status** (from status indicated above)
❑ Applicant certifying micro entity status. See 37 CFR 1.29 — NOTE: Absent a valid certification of Micro Entity Status (see forms PTO/SB/15A and 15B), issue fee payment in the micro entity amount will not be accepted at the risk of application abandonment.
❑ Applicant asserting small entity status. See 37 CFR 1.27 — NOTE: If the application was previously under micro entity status, checking this box will be taken to be a notification of loss of entitlement to micro entity status.
❑ Applicant changing to regular undiscounted fee status. — NOTE: Checking this box will be taken to be a notification of loss of entitlement to small or micro entity status, as applicable.

NOTE: This form must be signed in accordance with 37 CFR 1.31 and 1.33. See 37 CFR 1.4 for signature requirements and certifications.

Authorized Signature _____ Date _____

Typed or printed name _____ Registration No. _____

Menard v. Signify
Menard Exhibit 1022
Page 163

UNITED STATES PATENT AND TRADEMARK OFFICE

UNITED STATES DEPARTMENT OF COMMERCE
United States Patent and Trademark Office
Address: COMMISSIONER FOR PATENTS
P.O. Box 1450
Alexandria, Virginia 22313-1450
www.uspto.gov

APPLICATION NO.	FILING DATE	FIRST NAMED INVENTOR	ATTORNEY DOCKET NO.	CONFIRMATION NO.
15/435,141	02/16/2017	Steven Walter Pyshos	13682.225908	2406

91764 7590 09/15/2017
King & Spalding LLP (Eaton/Cooper)
ATTN: IP Docketing Department
1100 Louisiana Street, Suite 4000
Houston, TX 77002-5213

EXAMINER
VU, JIMMY T

ART UNIT	PAPER NUMBER
2844	

DATE MAILED: 09/15/2017

Determination of Patent Term Adjustment under 35 U.S.C. 154 (b)
(Applications filed on or after May 29, 2000)

The Office has discontinued providing a Patent Term Adjustment (PTA) calculation with the Notice of Allowance.

Section 1(h)(2) of the AIA Technical Corrections Act amended 35 U.S.C. 154(b)(3)(B)(i) to eliminate the requirement that the Office provide a patent term adjustment determination with the notice of allowance. See Revisions to Patent Term Adjustment, 78 Fed. Reg. 19416, 19417 (Apr. 1, 2013). Therefore, the Office is no longer providing an initial patent term adjustment determination with the notice of allowance. The Office will continue to provide a patent term adjustment determination with the Issue Notification Letter that is mailed to applicant approximately three weeks prior to the issue date of the patent, and will include the patent term adjustment on the patent. Any request for reconsideration of the patent term adjustment determination (or reinstatement of patent term adjustment) should follow the process outlined in 37 CFR 1.705.

Any questions regarding the Patent Term Extension or Adjustment determination should be directed to the Office of Patent Legal Administration at (571)-272-7702. Questions relating to issue and publication fee payments should be directed to the Customer Service Center of the Office of Patent Publication at 1-(888)-786-0101 or (571)-272-4200.

OMB Clearance and PRA Burden Statement for PTOL-85 Part B

The Paperwork Reduction Act (PRA) of 1995 requires Federal agencies to obtain Office of Management and Budget approval before requesting most types of information from the public. When OMB approves an agency request to collect information from the public, OMB (i) provides a valid OMB Control Number and expiration date for the agency to display on the instrument that will be used to collect the information and (ii) requires the agency to inform the public about the OMB Control Number's legal significance in accordance with 5 CFR 1320.5(b).

The information collected by PTOL-85 Part B is required by 37 CFR 1.311. The information is required to obtain or retain a benefit by the public which is to file (and by the USPTO to process) an application. Confidentiality is governed by 35 U.S.C. 122 and 37 CFR 1.14. This collection is estimated to take 12 minutes to complete, including gathering, preparing, and submitting the completed application form to the USPTO. Time will vary depending upon the individual case. Any comments on the amount of time you require to complete this form and/or suggestions for reducing this burden, should be sent to the Chief Information Officer, U.S. Patent and Trademark Office, U.S. Department of Commerce, P.O. Box 1450, Alexandria, Virginia 22313-1450. DO NOT SEND FEES OR COMPLETED FORMS TO THIS ADDRESS. SEND TO: Commissioner for Patents, P.O. Box 1450, Alexandria, Virginia 22313-1450. Under the Paperwork Reduction Act of 1995, no persons are required to respond to a collection of information unless it displays a valid OMB control number.

Privacy Act Statement

The Privacy Act of 1974 (P.L. 93-579) requires that you be given certain information in connection with your submission of the attached form related to a patent application or patent. Accordingly, pursuant to the requirements of the Act, please be advised that: (1) the general authority for the collection of this information is 35 U.S.C. 2(b)(2); (2) furnishing of the information solicited is voluntary; and (3) the principal purpose for which the information is used by the U.S. Patent and Trademark Office is to process and/or examine your submission related to a patent application or patent. If you do not furnish the requested information, the U.S. Patent and Trademark Office may not be able to process and/or examine your submission, which may result in termination of proceedings or abandonment of the application or expiration of the patent.

The information provided by you in this form will be subject to the following routine uses:

1. The information on this form will be treated confidentially to the extent allowed under the Freedom of Information Act (5 U.S.C. 552) and the Privacy Act (5 U.S.C 552a). Records from this system of records may be disclosed to the Department of Justice to determine whether disclosure of these records is required by the Freedom of Information Act.
2. A record from this system of records may be disclosed, as a routine use, in the course of presenting evidence to a court, magistrate, or administrative tribunal, including disclosures to opposing counsel in the course of settlement negotiations.
3. A record in this system of records may be disclosed, as a routine use, to a Member of Congress submitting a request involving an individual, to whom the record pertains, when the individual has requested assistance from the Member with respect to the subject matter of the record.
4. A record in this system of records may be disclosed, as a routine use, to a contractor of the Agency having need for the information in order to perform a contract. Recipients of information shall be required to comply with the requirements of the Privacy Act of 1974, as amended, pursuant to 5 U.S.C. 552a(m).
5. A record related to an International Application filed under the Patent Cooperation Treaty in this system of records may be disclosed, as a routine use, to the International Bureau of the World Intellectual Property Organization, pursuant to the Patent Cooperation Treaty.
6. A record in this system of records may be disclosed, as a routine use, to another federal agency for purposes of National Security review (35 U.S.C. 181) and for review pursuant to the Atomic Energy Act (42 U.S.C. 218(c)).
7. A record from this system of records may be disclosed, as a routine use, to the Administrator, General Services, or his/her designee, during an inspection of records conducted by GSA as part of that agency's responsibility to recommend improvements in records management practices and programs, under authority of 44 U.S.C. 2904 and 2906. Such disclosure shall be made in accordance with the GSA regulations governing inspection of records for this purpose, and any other relevant (i.e., GSA or Commerce) directive. Such disclosure shall not be used to make determinations about individuals.
8. A record from this system of records may be disclosed, as a routine use, to the public after either publication of the application pursuant to 35 U.S.C. 122(b) or issuance of a patent pursuant to 35 U.S.C. 151. Further, a record may be disclosed, subject to the limitations of 37 CFR 1.14, as a routine use, to the public if the record was filed in an application which became abandoned or in which the proceedings were terminated and which application is referenced by either a published application, an application open to public inspection or an issued patent.
9. A record from this system of records may be disclosed, as a routine use, to a Federal, State, or local law enforcement agency, if the USPTO becomes aware of a violation or potential violation of law or regulation.

Notice of Allowability	Application No. 15/435,141	Applicant(s) PYSHOS ET AL.	
	Examiner JIMMY VU	Art Unit 2844	AIA (First Inventor to File) Status Yes

-- The MAILING DATE of this communication appears on the cover sheet with the correspondence address--

All claims being allowable, PROSECUTION ON THE MERITS IS (OR REMAINS) CLOSED in this application. If not included herewith (or previously mailed), a Notice of Allowance (PTOL-85) or other appropriate communication will be mailed in due course. **THIS NOTICE OF ALLOWABILITY IS NOT A GRANT OF PATENT RIGHTS.** This application is subject to withdrawal from issue at the initiative of the Office or upon petition by the applicant. See 37 CFR 1.313 and MPEP 1308.

1. ☒ This communication is responsive to *amendment filed on 0823/2017*.
   ☐ A declaration(s)/affidavit(s) under **37 CFR 1.130(b)** was/were filed on_____.
2. ☐ An election was made by the applicant in response to a restriction requirement set forth during the interview on _____; the restriction requirement and election have been incorporated into this action.
3. ☒ The allowed claim(s) is/are *1-20*. As a result of the allowed claim(s), you may be eligible to benefit from the **Patent Prosecution Highway** program at a participating intellectual property office for the corresponding application. For more information, please see http://www.uspto.gov/patents/init_events/pph/index.jsp or send an inquiry to PPHfeedback@uspto.gov.
4. ☐ Acknowledgment is made of a claim for foreign priority under 35 U.S.C. § 119(a)-(d) or (f).

   Certified copies:

   a) ☐ All b) ☐ Some *c) ☐ None of the:
   1. ☐ Certified copies of the priority documents have been received.
   2. ☐ Certified copies of the priority documents have been received in Application No. _____ .
   3. ☐ Copies of the certified copies of the priority documents have been received in this national stage application from the International Bureau (PCT Rule 17.2(a)).

   * Certified copies not received: _____.

Applicant has THREE MONTHS FROM THE "MAILING DATE" of this communication to file a reply complying with the requirements noted below. Failure to timely comply will result in ABANDONMENT of this application.
THIS THREE-MONTH PERIOD IS NOT EXTENDABLE.

5. ☐ CORRECTED DRAWINGS (as "replacement sheets") must be submitted.
   ☐ including changes required by the attached Examiner's Amendment / Comment or in the Office action of Paper No./Mail Date _____.

   Identifying indicia such as the application number (see 37 CFR 1.84(c)) should be written on the drawings in the front (not the back) of each sheet. Replacement sheet(s) should be labeled as such in the header according to 37 CFR 1.121(d).
6. ☐ DEPOSIT OF and/or INFORMATION about the deposit of BIOLOGICAL MATERIAL must be submitted. Note the attached Examiner's comment regarding REQUIREMENT FOR THE DEPOSIT OF BIOLOGICAL MATERIAL.

Attachment(s)

1. ☒ Notice of References Cited (PTO-892)
2. ☒ Information Disclosure Statements (PTO/SB/08), Paper No./Mail Date 8/8/17
3. ☐ Examiner's Comment Regarding Requirement for Deposit of Biological Material
4. ☐ Interview Summary (PTO-413), Paper No./Mail Date _____ .
5. ☒ Examiner's Amendment/Comment
6. ☒ Examiner's Statement of Reasons for Allowance
7. ☐ Other _____.

/JIMMY VU/
Primary Examiner, Art Unit 2844

Menard v. Signify
Menard Exhibit 1022
Page 166

DETAILED ACTION

Examiner's Comment

This Office Action is in response to the Applicant's Amendment filed on 08/17/2017. In virtue of the amendment:

Claims 1-20 are present in the instant application.

Claims 5, 10, 16, 17, 19 and 20 are currently amended.

The references cited in the Information Disclosure Statement (IDS) filed on 08/08/2017 have been considered by the examiner.

The present application, filed on or after March 16, 2013, is being examined under the first inventor to file provisions of the AIA.

Examiner's Statement of Reasons for Allowance

Claims **1-20** are allowed.

The primary reasons for the allowance of claims 1-20 have been indicated in previous Office Action mailed on 07/14/2017.

The prior art made of record and relied upon is considered pertinent to applicant's disclosure. The best consider with this application can be filed in Sanders (U.S. Pub. 2015/0054410 A1).

Any comments considered necessary by applicant must be submitted no later than the payment of the issue fee and, to avoid processing delays, should preferably accompany the issue fee. Such submissions should be clearly labeled "Comments on Statement of Reasons for Allowance."

Inquiry

Any inquiry concerning this communication or earlier communications from the examiner should be directed to Jimmy T Vu whose telephone number is (571) 272-1832. The examiner can normally be reached on M - F: 9 - 6:00.

If attempts to reach the examiner by telephone are unsuccessful, the examiner's supervisor, Douglas Owens can be reached on (571) 272-1662. The fax phone numbers for the organization where this application or proceeding is assigned are (571) 273-8300.

Any inquiry of a general nature or relating to the status of this application or proceeding should be directed to the receptionist whose telephone number is (571) 272-2800.

/JIMMY VU/
Primary Examiner, Art Unit 2844

Notice of References Cited	Application/Control No. 15/435,141	Applicant(s)/Patent Under Reexamination PYSHOS ET AL.	
	Examiner JIMMY VU	Art Unit 2844	Page 1 of 1

U.S. PATENT DOCUMENTS

*		Document Number Country Code-Number-Kind Code	Date MM-YYYY	Name	CPC Classification	US Classification
*	A	US-2015/0054410 A1	02-2015	Sanders; Chad N.	H05B33/0857	315/151
	B	US-				
	C	US-				
	D	US-				
	E	US-				
	F	US-				
	G	US-				
	H	US-				
	I	US-				
	J	US-				
	K	US-				
	L	US-				
	M	US-				

FOREIGN PATENT DOCUMENTS

*		Document Number Country Code-Number-Kind Code	Date MM-YYYY	Country	Name	CPC Classification
	N					
	O					
	P					
	Q					
	R					
	S					
	T					

NON-PATENT DOCUMENTS

*		Include as applicable: Author, Title Date, Publisher, Edition or Volume, Pertinent Pages)
	U	
	V	
	W	
	X	

*A copy of this reference is not being furnished with this Office action. (See MPEP § 707.05(a).)
Dates in MM-YYYY format are publication dates. Classifications may be US or foreign.

UNITED STATES PATENT AND TRADEMARK OFFICE

UNITED STATES DEPARTMENT OF COMMERCE
United States Patent and Trademark Office
Address: COMMISSIONER FOR PATENTS
P.O. Box 1450
Alexandria, Virginia 22313-1450
www.uspto.gov

BIB DATA SHEET

CONFIRMATION NO. 2406

SERIAL NUMBER	FILING or 371(c) DATE	CLASS	GROUP ART UNIT	ATTORNEY DOCKET NO.
15/435,141	02/16/2017 RULE	315	2844	13682.225908

APPLICANTS
Cooper Technologies Company, Houston, TX;

INVENTORS
Steven Walter Pyshos, Peachtree City, GA;
Raymond Janik, Fayetteville, GA;
Kevin Roy Harpenau, Atlanta, GA;

**** CONTINUING DATA ***************************
This appln claims benefit of 62/297,424 02/19/2016

**** FOREIGN APPLICATIONS ***************************

**** IF REQUIRED, FOREIGN FILING LICENSE GRANTED ****
02/24/2017

Foreign Priority claimed	☐ Yes ☑ No		STATE OR COUNTRY	SHEETS DRAWINGS	TOTAL CLAIMS	INDEPENDENT CLAIMS
35 USC 119(a-d) conditions met	☐ Yes ☑ No	☐ Met after Allowance				
Verified and Acknowledged	/JIMMY T VU/ Examiner's Signature	/JV/ Initials	GA	10	20	3

ADDRESS

King & Spalding LLP (Eaton/Cooper)
ATTN: IP Docketing Department
1100 Louisiana Street, Suite 4000
Houston, TX 77002-5213
UNITED STATES

TITLE

Configurable Lighting System

FILING FEE RECEIVED		
1600	FEES: Authority has been given in Paper No._____ to charge/credit DEPOSIT ACCOUNT No._____ for following:	☐ All Fees ☐ 1.16 Fees (Filing) ☐ 1.17 Fees (Processing Ext. of time) ☐ 1.18 Fees (Issue) ☐ Other _____ ☐ Credit

Index of Claims	Application/Control No.	Applicant(s)/Patent Under Reexamination
	15435141	PYSHOS ET AL.
	Examiner	**Art Unit**
	JIMMY VU	2844

✓	Rejected	-	Cancelled	N	Non-Elected	A	Appeal
=	Allowed	÷	Restricted	I	Interference	O	Objected

☒ Claims renumbered in the same order as presented by applicant ☐ CPA ☐ T.D. ☐ R.1.47

CLAIM		DATE								
Final	Original	09/05/2017								
	1	=								
	2	=								
	3	=								
	4	=								
	5	=								
	6	=								
	7	=								
	8	=								
	9	=								
	10	=								
	11	=								
	12	=								
	13	=								
	14	=								
	15	=								
	16	=								
	17	=								
	18	=								
	19	=								
	20	=								

Issue Classification	Application/Control No.	Applicant(s)/Patent Under Reexamination
	15435141	PYSHOS ET AL.
	Examiner	**Art Unit**
	JIMMY VU	2844

CPC						
Symbol					**Type**	**Version**
H05B		33	/	0863	F	2013-01-01
F21V		5	/	04	I	2013-01-01
F21V		17	/	12	I	2013-01-01
F21K		9	/	62	I	2016-08-01
F21V		7	/	00	I	2013-01-01
F21V		23	/	001	I	2013-01-01
F21V		3	/	02	I	2013-01-01
F21V		21	/	088	I	2013-01-01
F21S		8	/	026	I	2013-01-01
H05B		33	/	0845	I	2013-01-01
F21Y		2115	/	10	A	2016-08-01
F21Y		2113	/	13	A	2016-08-01
			/			
			/			
			/			

CPC Combination Sets								
Symbol					**Type**	**Set**	**Ranking**	**Version**
			/					
			/					

NONE (Assistant Examiner) (Date)		**Total Claims Allowed:** 20	
/JIMMY VU/ Primary Examiner.Art Unit 2844 (Primary Examiner)	09/05/17 (Date)	O.G. Print Claim(s) 1	O.G. Print Figure 1A

U.S. Patent and Trademark Office Part of Paper No. 20170905

Issue Classification	Application/Control No.	Applicant(s)/Patent Under Reexamination
	15435141	PYSHOS ET AL.
	Examiner	**Art Unit**
	JIMMY VU	2844

US ORIGINAL CLASSIFICATION		INTERNATIONAL CLASSIFICATION	
CLASS	SUBCLASS	CLAIMED	NON-CLAIMED
315	294	H 0 5 B 33 / 08 (2006.01.01)	

CROSS REFERENCE(S)

CLASS	SUBCLASS (ONE SUBCLASS PER BLOCK)				
315	308				

NONE (Assistant Examiner) (Date)	Total Claims Allowed: 20	
/JIMMY VU/ Primary Examiner.Art Unit 2844 09/05/17 (Primary Examiner) (Date)	O.G. Print Claim(s) 1	O.G. Print Figure 1A

Menard v. Signify
Menard Exhibit 1022
Page 173

Issue Classification	Application/Control No.	Applicant(s)/Patent Under Reexamination
	15435141	PYSHOS ET AL.
	Examiner	**Art Unit**
	JIMMY VU	2844

☒ **Claims renumbered in the same order as presented by applicant** ☐ **CPA** ☐ **T.D.** ☐ **R.1.47**

Final	Original	Final	Original	Final	Original	Final	Original	Final	Original	Final	Original	Final	Original	Final	Original
	1		17												
	2		18												
	3		19												
	4		20												
	5														
	6														
	7														
	8														
	9														
	10														
	11														
	12														
	13														
	14														
	15														
	16														

NONE (Assistant Examiner) (Date)		**Total Claims Allowed:** 20	
/JIMMY VU/ Primary Examiner.Art Unit 2844 (Primary Examiner)	09/05/17 (Date)	O.G. Print Claim(s) 1	O.G. Print Figure 1A

U.S. Patent and Trademark Office Part of Paper No. 20170905

EAST Search History

EAST Search History (Prior Art)

Ref #	Hits	Search Query	DBs	Default Operator	Plurals	Time Stamp
L1	16	(7426312|8317362|20140210357|20060220586|20170086265|20170019973).pn.	US-PGPUB; USPAT; USOCR; FPRS; EPO; JPO; DERWENT; IBM_TDB	OR	ON	2017/09/05 13:10
L2	55781	((light$3|lamp$1|LED$1|luminaire) and (input$4 with (set|setting|settable) with (state$1|channel$1))	US-PGPUB; USPAT; USOCR; FPRS; EPO; JPO; DERWENT; IBM_TDB	OR	ON	2017/09/05 13:13
L3	20081	((light$3|lamp$1|LED$1|luminaire) and (input$4 with (set|setting|settable) with (state$1|channel$1) with control$4)	US-PGPUB; USPAT; USOCR; FPRS; EPO; JPO; DERWENT; IBM_TDB	OR	ON	2017/09/05 13:15
L4	4323	((light$3|lamp$1|LED$1|luminaire) and (input$4 with (set|setting|settable) with (state$1|channel$1) with control$4 with power)	US-PGPUB; USPAT; USOCR; FPRS; EPO; JPO; DERWENT; IBM_TDB	OR	ON	2017/09/05 13:15
L5	430	4 and ((color|colour) with temperature)	US-PGPUB; USPAT; USOCR; FPRS; EPO; JPO; DERWENT; IBM_TDB	OR	ON	2017/09/05 13:16
L6	9	5 and 315/151,185R,209R,291,294,307,308,312.ccls.	US-PGPUB; USPAT; USOCR; FPRS; EPO; JPO; DERWENT; IBM_TDB	OR	ON	2017/09/05 13:17
L7	15	("20070152926" | "20090184662" | "20090295300" | "20100109548" | "20100181935" | "20110037399" | "20120025724" | "20120091907" | "20130257280" | "6016038" | "6211626" | "7256554" | "8102167" | "8378588").PN. OR ("8937434").URPN.	US-PGPUB; USPAT; USOCR	OR	OFF	2017/09/05 13:18
L8	64	5 and (hous$3 with switch$3)	US-PGPUB; USPAT; USOCR; FPRS; EPO; JPO; DERWENT; IBM_TDB	OR	ON	2017/09/05 13:21
L9	0	6 and (dual with pin$1)	US-PGPUB; USPAT; USOCR; FPRS; EPO; JPO; DERWENT; IBM_TDB	OR	ON	2017/09/05 13:22
L10	4	5 and (dual with pin$1)	US-PGPUB; USPAT; USOCR;	OR	ON	2017/09/05 13:22

			FPRS; EPO; JPO; DERWENT; IBM_TDB			
L11	0	5 and (hous$3 with board with switch$3)	US-PGPUB; USPAT; USOCR; FPRS; EPO; JPO; DERWENT; IBM_TDB	OR	ON	2017/09/05 13:23
L12	2	5 and (hous$3 with switch$3 with pin$1)	US-PGPUB; USPAT; USOCR; FPRS; EPO; JPO; DERWENT; IBM_TDB	OR	ON	2017/09/05 13:25
L13	238	(light$3|lamp$1|LED$1|luminaire) and ((color|colour) with temperature) and (control$4 with light$3 with (channel$1|state$1) with first with second with third)	US-PGPUB; USPAT; USOCR; FPRS; EPO; JPO; DERWENT; IBM_TDB	OR	ON	2017/09/05 13:28
L14	56	13 and 315/151,185R,209R,291,294,307,308,312.ccls.	US-PGPUB; USPAT; USOCR; FPRS; EPO; JPO; DERWENT; IBM_TDB	OR	ON	2017/09/05 13:29
L15	0	14 and (dual with pin$1)	US-PGPUB; USPAT; USOCR; FPRS; EPO; JPO; DERWENT; IBM_TDB	OR	ON	2017/09/05 13:29
L16	5	13 and (dual with pin$1)	US-PGPUB; USPAT; USOCR; FPRS; EPO; JPO; DERWENT; IBM_TDB	OR	ON	2017/09/05 13:29
L17	0	13 and (hous$3 with board with switch$3)	US-PGPUB; USPAT; USOCR; FPRS; EPO; JPO; DERWENT; IBM_TDB	OR	ON	2017/09/05 13:29
L18	18	13 and (hous$3 with switch$3)	US-PGPUB; USPAT; USOCR; FPRS; EPO; JPO; DERWENT; IBM_TDB	OR	ON	2017/09/05 13:30
L19	59	13 and hous$3 and switch$3	US-PGPUB; USPAT; USOCR; FPRS; EPO; JPO; DERWENT; IBM_TDB	OR	ON	2017/09/05 13:32
L20	7	14 and hous$3 and switch$3	US-PGPUB; USPAT; USOCR; FPRS; EPO; JPO; DERWENT; IBM_TDB	OR	ON	2017/09/05 13:32
L21	70	13 and (H05B37/02|H05B33/08|H05B33/0845|H05B33/0863|F21K9/62|F21S8/026|F21V3/02|F21V5/04|F21V7/00|F21V17/12|F21V21/088|F21V23/001|F21Y2113/13|F21Y2115/10).cpc.	US-PGPUB; USPAT; USOCR;	OR	ON	2017/09/05 13:34

			FPRS; EPO; JPO; DERWENT; IBM_TDB			
L22	5	21 and (dual with pin$1)	US-PGPUB; USPAT; USOCR; FPRS; EPO; JPO; DERWENT; IBM_TDB	OR	ON	2017/09/05 13:35
L23	22	21 and hous$3 and switch$3	US-PGPUB; USPAT; USOCR; FPRS; EPO; JPO; DERWENT; IBM_TDB	OR	ON	2017/09/05 13:35
L24	37	5 and (H05B37/02|H05B33/08|H05B33/0845|H05B33/0863|F21K9/62|F21S8/026|F21V3/02|F21V5/04|F21V7/00|F21V17/12|F21V21/088|F21V23/001|F21Y2113/13|F21Y2115/10).cpc.	US-PGPUB; USPAT; USOCR; FPRS; EPO; JPO; DERWENT; IBM_TDB	OR	ON	2017/09/05 13:37
L25	35	24 and hous$3 and switch$3	US-PGPUB; USPAT; USOCR; FPRS; EPO; JPO; DERWENT; IBM_TDB	OR	ON	2017/09/05 13:38
L26	25	(("PYSHOS") near3 ("Steven")).IN.	US-PGPUB; USPAT; USOCR	OR	OFF	2017/09/05 13:40
L28	0	26 and (light$3|lamp$1|LED$1|luminaire) and (input$4 with (set|setting|settable) with (state$1|channel$1) with control$4)	US-PGPUB; USPAT; USOCR; FPRS; EPO; JPO; DERWENT; IBM_TDB	OR	ON	2017/09/05 13:41
L29	0	26 and ((light$3|lamp$1|LED$1|luminaire) with (state$1|channel$1) with control$4)	US-PGPUB; USPAT; USOCR; FPRS; EPO; JPO; DERWENT; IBM_TDB	OR	ON	2017/09/05 13:42
L30	23	(("JANIK") near3 ("Raymond")).IN.	US-PGPUB; USPAT; USOCR	OR	OFF	2017/09/05 13:42
L31	31	(("HARPENAU") near3 ("Kevin")).IN.	US-PGPUB; USPAT; USOCR	OR	OFF	2017/09/05 13:44

EAST Search History (Interference)

Ref #	Hits	Search Query	DBs	Default Operator	Plurals	Time Stamp
L35	25	((light$3|lamp$1|LED$1|luminaire) and ((color|colour) with temperature) and (control$4 with light$3 with (channel$1|state$1) with first with second with third)).clm.	US-PGPUB; USPAT	OR	ON	2017/09/05 14:04
L36	0	((light$3|lamp$1|LED$1|luminaire) and ((color|colour) with temperature) and (control$4 with light$3 with (channel$1|state$1) with first with second with third) and (dual with pin$1)).clm.	US-PGPUB; USPAT	OR	ON	2017/09/05 14:05
L37	2	((light$3|lamp$1|LED$1|luminaire) and ((color|colour) with temperature) and (control$4 with light$3 with (channel$1|state$1) with first with second with third) and hous$3 and switch$3).clm.	US-PGPUB; USPAT	OR	ON	2017/09/05 14:07

9/5/2017 2:07:53 PM
C:\Users\jvu\Documents\EAST\Workspaces\5435141.wsp

PTO/SB/08A (08-03)
Approved for use through 07/31/2006. OMB 0651-0031
U.S. Patent and Trademark Office: U.S. DEPARTMENT OF COMMERCE
Under the Paperwork Reduction Act of 1995 no persons are required to respond to a collection of information unless it contains a valid OMB control number.

Substitute for form 1449A/PTO

INFORMATION DISCLOSURE STATEMENT BY APPLICANT

(use as many sheets as necessary)

Sheet	1	of	1

Complete if Known	
Application Number	**15/435,141**
Filing Date	**02-16-2017**
First Named Inventor	**Steven Walter Pyshos**
Group Art Unit	**2844**
Examiner Name	**Jimmy T. Vu**
Attorney Docket Number	**13682.225908**

U.S. PATENT DOCUMENTS

Examiner Initials *	Cite No. [1]	U.S. Patent Document Number	Kind Code (if known)	Name of Patentee or Applicant of Cited Document	Date of Publication of Cited Document MM-DD- YYYY	Pages Columns Lines Where Relevant Passages or Relevant Figures Appear
	1.	7416312		McDermott	08-26-2008	
	2.	8317362		Ku et al.	11-27-2012	
	3.	2014/0210357		Yan et al.	07-31-2014	
	4.	2006/0220586		Latham	10-05-2006	
	5.	2017/0086265		Akiyama et al.	03-23-2017	
	6.	2017/0019973		Beck et al.	01-19-2017	

FOREIGN PATENT DOCUMENTS

Examiner Initials *	Cite No. [1]	Foreign Patent Document Office[3]	Number	Kind Code[2] (if known)	Name of Patentee or Applicant of Cited Document	Date of Publication of Cited Document MM-DD- YYYY	Pages Columns Lines Where Relevant Passages or Relevant Figures Appear	T [6]

OTHER PRIOR ART – NON PATENT LITERATURE DOCUMENTS

Examiner Initials *	Cite No. [1]	Include name of the author (in CAPITAL LETTERS) title of the article (when appropriate) title of the item (book magazine journal serial symposium catalog etc.) date page(s) volume-issue number(s) publisher city and/or country where published.	T [6]

Examiner Signature	/JIMMY T VU/	Date Considered	09/05/2017

*EXAMINER: Initial if reference considered whether or not citation is in conformance with MPEP 609. Draw line through citation if not in conformance and not considered. Include copy of this form with next communication to applicant.

[1] Unique citation designation number. [2] See attached Kinds of U.S. Patent Documents. [3] Enter Office that issued the document by the two-letter code (WIPO Standard ST.3). [4] For Japanese patent documents the indication of the year of the reign of the Emperor must precede the serial number of the patent document. [5] Kind of document by the appropriate symbols as indicated on the document under WIPO Standard ST. 16 if possible. [6] Applicant is to place a check mark here if English language Translation is attached.

Burden Hour Statement: This form is estimated to take 2.0 hours to complete. Time will vary depending upon the needs of the individual case. Any comments on the amount of time you are required to complete this form should be sent to the Chief Information Officer U. S. Patent and Trademark Office Washington DC 20231. DO NOT SEND FEES OR COMPLETED FORMS TO THIS ADDRESS. SEND TO: Assistant Commissioner for Patents Washington DC 20231.
DMSLIBRARY01\30940127.v1

ALL REFERENCES CONSIDERED EXCEPT WHERE LINED THROUGH. /J.T.V/

Search Notes	Application/Control No.	Applicant(s)/Patent Under Reexamination
	15435141	PYSHOS ET AL.
	Examiner	**Art Unit**
	JIMMY VU	2844

CPC- SEARCHED		
Symbol	**Date**	**Examiner**
H05B37/02|H05B33/08|H05B33/0845|H05B33/0863|F21K9/62|F21S8/026|F21V3/02|F21V5/04|F21V7/00|F21V17/12|F21V21/088|F21V23/001|F21Y2113/13|F21Y2115/10	7/10/17	JV

CPC COMBINATION SETS - SEARCHED		
Symbol	**Date**	**Examiner**

US CLASSIFICATION SEARCHED			
Class	**Subclass**	**Date**	**Examiner**
315	151,185R,209R,291,294,307,308,312	7/10/17	JV

* See search history printout included with this form or the SEARCH NOTES box below to determine the scope of the search.

SEARCH NOTES		
Search Notes	**Date**	**Examiner**
Class/subclass, Text, Inventor name, Back/Forward search	7/10/17	JV
considered IDS	9/5/17	JV
updated search	9/5/17	JV

INTERFERENCE SEARCH			
US Class/ CPC Symbol	**US Subclass / CPC Group**	**Date**	**Examiner**
315	294,308	9/5/17	JV
USPAT, US-PGPUB	see interference search	9/5/17	JV

Menard v. Signify
Menard Exhibit 1022
Page 180

PART B - FEE(S) TRANSMITTAL

Complete and send this form, together with applicable fee(s), to: Mail **Mail Stop ISSUE FEE**
Commissioner for Patents
P.O. Box 1450
Alexandria, Virginia 22313-1450
or Fax (571)-273-2885

INSTRUCTIONS: This form should be used for transmitting the ISSUE FEE and PUBLICATION FEE (if required). Blocks 1 through 5 should be completed where appropriate. All further correspondence including the Patent, advance orders and notification of maintenance fees will be mailed to the current correspondence address as indicated unless corrected below or directed otherwise in Block 1, by (a) specifying a new correspondence address; and/or (b) indicating a separate "FEE ADDRESS" for maintenance fee notifications.

CURRENT CORRESPONDENCE ADDRESS (Note: Use Block 1 for any change of address)

91764 7590 09/15/2017
King & Spalding LLP (Eaton/Cooper)
ATTN: IP Docketing Department
1100 Louisiana Street, Suite 4000
Houston, TX 77002-5213

Note: A certificate of mailing can only be used for domestic mailings of the Fee(s) Transmittal. This certificate cannot be used for any other accompanying papers. Each additional paper, such as an assignment or formal drawing, must have its own certificate of mailing or transmission.

Certificate of Mailing or Transmission
I hereby certify that this Fee(s) Transmittal is being deposited with the United States Postal Service with sufficient postage for first class mail in an envelope addressed to the Mail Stop ISSUE FEE address above, or being facsimile transmitted to the USPTO (571) 273-2885, on the date indicated below.

Robert T. Neufeld	(Depositor's name)
/Robert T. Neufeld/	(Signature)
10-06-2017	(Date)

APPLICATION NO.	FILING DATE	FIRST NAMED INVENTOR	ATTORNEY DOCKET NO.	CONFIRMATION NO.
15/435,141	02/16/2017	Steven Walter Pyshos	13682.225908	2406

TITLE OF INVENTION: CONFIGURABLE LIGHTING SYSTEM

APPLN. TYPE	ENTITY STATUS	ISSUE FEE DUE	PUBLICATION FEE DUE	PREV. PAID ISSUE FEE	TOTAL FEE(S) DUE	DATE DUE
nonprovisional	UNDISCOUNTED	$960	$0	$0	$960	12/15/2017

EXAMINER	ART UNIT	CLASS-SUBCLASS
VU, JIMMY T	2844	315-294000

1. Change of correspondence address or indication of "Fee Address" (37 CFR 1.363).
- ☐ Change of correspondence address (or Change of Correspondence Address form PTO/SB/122) attached.
- ☒ "Fee Address" indication (or "Fee Address" Indication form PTO/SB/47; Rev 03-02 or more recent) attached. **Use of a Customer Number is required.**

2. For printing on the patent front page, list
(1) The names of up to 3 registered patent attorneys or agents OR, alternatively,
(2) The name of a single firm (having as a member a registered attorney or agent) and the names of up to 2 registered patent attorneys or agents. If no name is listed, no name will be printed.

1 King & Spalding LLP
2
3

3. ASSIGNEE NAME AND RESIDENCE DATA TO BE PRINTED ON THE PATENT (print or type)

PLEASE NOTE: Unless an assignee is identified below, no assignee data will appear on the patent. If an assignee is identified below, the document has been filed for recordation as set forth in 37 CFR 3.11. Completion of this form is NOT a substitute for filing an assignment.

(A) NAME OF ASSIGNEE: Cooper Technologies Company
(B) RESIDENCE: (CITY and STATE OR COUNTRY): Houston, Texas

Please check the appropriate assignee category or categories (will not be printed on the patent) : ☐ Individual ☒ Corporation or other private group entity ☐ Government

4a. The following fee(s) are submitted:
- ☒ Issue Fee
- ☐ Publication Fee (No small entity discount permitted)
- ☐ Advance Order - # of Copies _____

4b. Payment of Fee(s): (**Please first reapply any previously paid issue fee shown above**)
- ☐ A check is enclosed.
- ☒ Payment by credit card. Form PTO-2038 is attached.
- ☒ The director is hereby authorized to charge the required fee(s), any deficiency, or credits any overpayment, to Deposit Account Number 110980 (enclose an extra copy of this form).

5. **Change in Entity Status** (from status indicated above)
- ☐ Applicant certifying micro entity status. See 37 CFR 1.29 — NOTE: Absent a valid certification of Micro Entity Status (see forms PTO/SB/15A and 15B), issue fee payment in the micro entity amount will not be accepted at the risk of application abandonment.
- ☐ Applicant asserting small entity status. See 37 CFR 1.27 — NOTE: If the application was previously under micro entity status, checking this box will be taken to be a notification of loss of entitlement to micro entity status.
- ☐ Applicant changing to regular undiscounted fee status. — NOTE: Checking this box will be taken to be a notification of loss of entitlement to small or micro entity status, as applicable.

NOTE: This form must be signed in accordance with 37 CFR 1.31 and 1.33. See 37 CFR 1.4 for signature requirements and certifications.

Authorized Signature /Robert T. Neufeld/ Date 10-06-2017
Typed or printed name Robert T. Neufeld Registration No. 48394

Menard v. Signify
Menard Exhibit 1022
Page 181

PTO/SB/47 (03-09)
Approved for use through 03/31/2012. OMB 0651-0016
U.S. Patent and Trademark Office; U. S. DEPARTMENT OF COMMERCE
Under the Paperwork Reduction Act of 1995, no persons are required to respond to a collection of information unless it displays a valid OMB control number.

"FEE ADDRESS" INDICATION FORM

Address to:
Mail Stop M Correspondence
Commissioner for Patents
P.O. Box 1450
Alexandria, VA 22313-1450

- OR -

Fax to:
571-273-6500

INSTRUCTIONS: The issue fee must have been paid for application(s) listed on this form. In addition, only an address represented by a Customer Number can be established as the fee address for maintenance fee purposes (hereafter, fee address). A fee address should be established when correspondence related to maintenance fees should be mailed to a different address than the correspondence address for the application. **When to check the first box below**: If you have a Customer Number to represent the fee address. **When to check the second box below**: If you have no Customer Number representing the desired fee address, in which case a completed Request for Customer Number (PTO/SB/125) must be attached to this form. For more information on Customer Numbers, see the Manual of Patent Examining Procedure (MPEP) § 403.

For the following listed application(s), please recognize as the "Fee Address" under the provisions of 37 CFR 1.363 the address associated with:

☑ Customer Number: 00124

OR

☐ The attached Request for Customer Number (PTO/SB/125) form.

PATENT NUMBER (if known)	APPLICATION NUMBER
	15/435141

Completed by (check one):

☐ Applicant/Inventor

☑ Attorney or Agent of record 48,394 (Reg. No.)

☐ Assignee of record of the entire interest. See 37 CFR 3.71. Statement under 37 CFR 3.73(b) is enclosed. (Form PTO/SB/96)

☐ Assignee recorded at Reel _____ Frame_____

/Robert T. Neufeld/
Signature

Robert T. Neufeld
Typed or printed name

404.572.4600
Requester's telephone number

October 6, 2017
Date

NOTE: Signatures of all the inventors or assignees of record of the entire interest or their representative(s) are required. Submit multiple forms if more that one signature is required, see below*.

☑ *** Total of 1 forms are submitted.**

This collection of information is required by 37 CFR 1.363. The information is required to obtain or retain a benefit by the public which is to file (and by the USPTO to process) an application. Confidentiality is governed by 35 U.S.C. 122 and 37 CFR 1. 11 and 1.14. This collection is estimated to take 5 minutes to complete, including gathering, preparing, and submitting the completed application form to the USPTO. Time will vary depending upon the individual case. Any comments on the amount of time you require to complete this form and/or suggestions for reducing this burden, should be sent to the Chief Information Officer, U.S. Patent and Trademark Office, U.S. Department of Commerce, P.O. Box 1450, Alexandria, VA 22313- 1450. DO NOT SEND COMPLETED FORMS TO THIS ADDRESS.
SEND TO: Mail Stop M Correspondence, Commissioner for Patents, P.O. Box 1450, Alexandria, VA 22313-1450.
If you need assistance in completing the form, call 1-800-PTO-9199 and select option 2.

Privacy Act Statement

The **Privacy Act of 1974 (P.L. 93-579)** requires that you be given certain information in connection with your submission of the attached form related to a patent application or patent. Accordingly, pursuant to the requirements of the Act, please be advised that: (1) the general authority for the collection of this information is 35 U.S.C. 2(b)(2); (2) furnishing of the information solicited is voluntary; and (3) the principal purpose for which the information is used by the U.S. Patent and Trademark Office is to process and/or examine your submission related to a patent application or patent. If you do not furnish the requested information, the U.S. Patent and Trademark Office may not be able to process and/or examine your submission, which may result in termination of proceedings or abandonment of the application or expiration of the patent.

The information provided by you in this form will be subject to the following routine uses:

1. The information on this form will be treated confidentially to the extent allowed under the Freedom of Information Act (5 U.S.C. 552) and the Privacy Act (5 U.S.C 552a). Records from this system of records may be disclosed to the Department of Justice to determine whether disclosure of these records is required by the Freedom of Information Act.
2. A record from this system of records may be disclosed, as a routine use, in the course of presenting evidence to a court, magistrate, or administrative tribunal, including disclosures to opposing counsel in the course of settlement negotiations.
3. A record in this system of records may be disclosed, as a routine use, to a Member of Congress submitting a request involving an individual, to whom the record pertains, when the individual has requested assistance from the Member with respect to the subject matter of the record.
4. A record in this system of records may be disclosed, as a routine use, to a contractor of the Agency having need for the information in order to perform a contract. Recipients of information shall be required to comply with the requirements of the Privacy Act of 1974, as amended, pursuant to 5 U.S.C. 552a(m).
5. A record related to an International Application filed under the Patent Cooperation Treaty in this system of records may be disclosed, as a routine use, to the International Bureau of the World Intellectual Property Organization, pursuant to the Patent Cooperation Treaty.
6. A record in this system of records may be disclosed, as a routine use, to another federal agency for purposes of National Security review (35 U.S.C. 181) and for review pursuant to the Atomic Energy Act (42 U.S.C. 218(c)).
7. A record from this system of records may be disclosed, as a routine use, to the Administrator, General Services, or his/her designee, during an inspection of records conducted by GSA as part of that agency's responsibility to recommend improvements in records management practices and programs, under authority of 44 U.S.C. 2904 and 2906. Such disclosure shall be made in accordance with the GSA regulations governing inspection of records for this purpose, and any other relevant (*i.e.*, GSA or Commerce) directive. Such disclosure shall not be used to make determinations about individuals.
8. A record from this system of records may be disclosed, as a routine use, to the public after either publication of the application pursuant to 35 U.S.C. 122(b) or issuance of a patent pursuant to 35 U.S.C. 151. Further, a record may be disclosed, subject to the limitations of 37 CFR 1.14, as a routine use, to the public if the record was filed in an application which became abandoned or in which the proceedings were terminated and which application is referenced by either a published application, an application open to public inspection or an issued patent.
9. A record from this system of records may be disclosed, as a routine use, to a Federal, State, or local law enforcement agency, if the USPTO becomes aware of a violation or potential violation of law or regulation.

Electronic Patent Application Fee Transmittal

Application Number:	15435141
Filing Date:	16-Feb-2017
Title of Invention:	CONFIGURABLE LIGHTING SYSTEM
First Named Inventor/Applicant Name:	Steven Walter Pyshos
Filer:	Robert Timothy Neufeld
Attorney Docket Number:	13682.225908

Filed as Large Entity

Filing Fees for Utility under 35 USC 111(a)

Description	Fee Code	Quantity	Amount	Sub-Total in USD($)
Basic Filing:				
Pages:				
Claims:				
Miscellaneous-Filing:				
Petition:				
Patent-Appeals-and-Interference:				
Post-Allowance-and-Post-Issuance:				
UTILITY APPL ISSUE FEE	1501	1	960	960

Description	Fee Code	Quantity	Amount	Sub-Total in USD($)
Extension-of-Time:				
Miscellaneous:				
		Total in USD ($)		**960**

Electronic Acknowledgement Receipt	
EFS ID:	30575691
Application Number:	15435141
International Application Number:	
Confirmation Number:	2406
Title of Invention:	CONFIGURABLE LIGHTING SYSTEM
First Named Inventor/Applicant Name:	Steven Walter Pyshos
Customer Number:	91764
Filer:	Robert Timothy Neufeld
Filer Authorized By:	
Attorney Docket Number:	13682.225908
Receipt Date:	06-OCT-2017
Filing Date:	16-FEB-2017
Time Stamp:	17:37:59
Application Type:	Utility under 35 USC 111(a)

Payment information:

Submitted with Payment	yes
Payment Type	CARD
Payment was successfully received in RAM	$960
RAM confirmation Number	101017INTEFSW17381900
Deposit Account	
Authorized User	
The Director of the USPTO is hereby authorized to charge indicated fees and credit any overpayment as follows:	

File Listing:

Document Number	Document Description	File Name	File Size(Bytes)/ Message Digest	Multi Part /.zip	Pages (if appl.)
1	Issue Fee Payment (PTO-85B)	225908NOA.pdf	996289 c494206294e08c809b171f862b4cc57f6501b4d3	no	1
Warnings:					
Information:					
2	Change of Address	fee.pdf	312210 d97dfa629d0cb671c873bc63a908ba78dd7dc0c0	no	2
Warnings:					
Information:					
3	Fee Worksheet (SB06)	fee-info.pdf	30766 7534d5235a83f536e8e5e32739409b2501caf5b9	no	2
Warnings:					
Information:					
		Total Files Size (in bytes):	1339265		

This Acknowledgement Receipt evidences receipt on the noted date by the USPTO of the indicated documents, characterized by the applicant, and including page counts, where applicable. It serves as evidence of receipt similar to a Post Card, as described in MPEP 503.

<u>New Applications Under 35 U.S.C. 111</u>
If a new application is being filed and the application includes the necessary components for a filing date (see 37 CFR 1.53(b)-(d) and MPEP 506), a Filing Receipt (37 CFR 1.54) will be issued in due course and the date shown on this Acknowledgement Receipt will establish the filing date of the application.
<u>National Stage of an International Application under 35 U.S.C. 371</u>
If a timely submission to enter the national stage of an international application is compliant with the conditions of 35 U.S.C. 371 and other applicable requirements a Form PCT/DO/EO/903 indicating acceptance of the application as a national stage submission under 35 U.S.C. 371 will be issued in addition to the Filing Receipt, in due course.
<u>New International Application Filed with the USPTO as a Receiving Office</u>
If a new international application is being filed and the international application includes the necessary components for an international filing date (see PCT Article 11 and MPEP 1810), a Notification of the International Application Number and of the International Filing Date (Form PCT/RO/105) will be issued in due course, subject to prescriptions concerning national security, and the date shown on this Acknowledgement Receipt will establish the international filing date of the application.

UNITED STATES PATENT AND TRADEMARK OFFICE

UNITED STATES DEPARTMENT OF COMMERCE
United States Patent and Trademark Office
Address: COMMISSIONER FOR PATENTS
P.O. Box 1450
Alexandria, Virginia 22313-1450
www.uspto.gov

APPLICATION NUMBER	FILING OR 371(C) DATE	FIRST NAMED APPLICANT	ATTY. DOCKET NO./TITLE
15/435,141	02/16/2017	Steven Walter Pyshos	13682.225908

CONFIRMATION NO. 2406

PUBLICATION NOTICE

OC000000094867290

91764
King & Spalding LLP (Eaton/Cooper)
ATTN: IP Docketing Department
1100 Louisiana Street, Suite 4000
Houston, TX 77002-5213

Title:CONFIGURABLE LIGHTING SYSTEM

Publication No.US-2017-0303363-A1
Publication Date:10/19/2017

NOTICE OF PUBLICATION OF APPLICATION

The above-identified application will be electronically published as a patent application publication pursuant to 37 CFR 1.211, et seq. The patent application publication number and publication date are set forth above.

The publication may be accessed through the USPTO's publically available Searchable Databases via the Internet at www.uspto.gov. The direct link to access the publication is currently http://www.uspto.gov/patft/.

The publication process established by the Office does not provide for mailing a copy of the publication to applicant. A copy of the publication may be obtained from the Office upon payment of the appropriate fee set forth in 37 CFR 1.19(a)(1). Orders for copies of patent application publications are handled by the USPTO's Public Records Division. The Public Records Division can be reached by telephone at (571) 272-3150 or (800) 972-6382, by facsimile at (571) 273-3250, by mail addressed to the United States Patent and Trademark Office, Public Records Division, Alexandria, VA 22313-1450 or via the Internet.

In addition, information on the status of the application, including the mailing date of Office actions and the dates of receipt of correspondence filed in the Office, may also be accessed via the Internet through the Patent Electronic Business Center at www.uspto.gov using the public side of the Patent Application Information and Retrieval (PAIR) system. The direct link to access this status information is currently https://portal.uspto.gov/pair/PublicPair. Prior to publication, such status information is confidential and may only be obtained by applicant using the private side of PAIR.

Further assistance in electronically accessing the publication, or about PAIR, is available by calling the Patent Electronic Business Center at 1-866-217-9197.

Office of Data Managment, Application Assistance Unit (571) 272-4000, or (571) 272-4200, or 1-888-786-0101

UNITED STATES PATENT AND TRADEMARK OFFICE

UNITED STATES DEPARTMENT OF COMMERCE
United States Patent and Trademark Office
Address: COMMISSIONER FOR PATENTS
P.O. Box 1450
Alexandria, Virginia 22313-1450
www.uspto.gov

APPLICATION NO.	ISSUE DATE	PATENT NO.	ATTORNEY DOCKET NO.	CONFIRMATION NO.
15/435,141	11/14/2017	9820350	13682.225908	2406

91764 7590 10/25/2017
King & Spalding LLP (Eaton/Cooper)
ATTN: IP Docketing Department
1100 Louisiana Street, Suite 4000
Houston, TX 77002-5213

ISSUE NOTIFICATION

The projected patent number and issue date are specified above.

Determination of Patent Term Adjustment under 35 U.S.C. 154 (b)
(application filed on or after May 29, 2000)

The Patent Term Adjustment is 0 day(s). Any patent to issue from the above-identified application will include an indication of the adjustment on the front page.

If a Continued Prosecution Application (CPA) was filed in the above-identified application, the filing date that determines Patent Term Adjustment is the filing date of the most recent CPA.

Applicant will be able to obtain more detailed information by accessing the Patent Application Information Retrieval (PAIR) WEB site (http://pair.uspto.gov).

Any questions regarding the Patent Term Extension or Adjustment determination should be directed to the Office of Patent Legal Administration at (571)-272-7702. Questions relating to issue and publication fee payments should be directed to the Application Assistance Unit (AAU) of the Office of Data Management (ODM) at (571)-272-4200.

APPLICANT(s) (Please see PAIR WEB site http://pair.uspto.gov for additional applicants):

Steven Walter Pyshos, Peachtree City, GA;
Cooper Technologies Company, Houston, TX;
Raymond Janik, Fayetteville, GA;
Kevin Roy Harpenau, Atlanta, GA;

The United States represents the largest, most dynamic marketplace in the world and is an unparalleled location for business investment, innovation, and commercialization of new technologies. The USA offers tremendous resources and advantages for those who invest and manufacture goods here. Through SelectUSA, our nation works to encourage and facilitate business investment. To learn more about why the USA is the best country in the world to develop technology, manufacture products, and grow your business, visit SelectUSA.gov.