DRP_PTABDecision@uspto.gov
571-272-7822

Paper 12
Date: February 5, 2026

UNITED STATES PATENT AND TRADEMARK OFFICE

BEFORE THE PATENT TRIAL AND APPEAL BOARD

LUMINEX INTERNATIONAL CO., LTD.
and MENARD, INC.,
Petitioner,

v.

SIGNIFY HOLDINGS B.V.,
Patent Owner.

IPR2024-00101
Patent 10,299,336 B2

Before KALYAN K. DESHPANDE, *Chief Administrative Patent Judge*, MICHAEL W. KIM, *Vice Chief Administrative Patent Judge,* and JEFFREY W. ABRAHAM, *Acting Vice Chief Administrative Patent Judge*.

ABRAHAM, *Acting Vice Chief Administrative Patent Judge*.

DECISION
Delegated Director Review of
Final Written Decision Determining Some Challenged Claims Unpatentable
37 C.F.R. § 42.75(f)

I. BACKGROUND

Luminex International Company, Ltd. ("Petitioner") filed a Petition requesting *inter partes* review of claims 1–20 of U.S. Patent No. 10,299,336 B2 (Ex. 1001, "the '336 patent"). Paper 1 ("Pet."). The Board issued a Decision instituting an *inter partes* review determining, *inter alia*, that Petitioner demonstrated a reasonable likelihood of establishing that claims 13 and 15 are unpatentable under § 103(a) as obvious over U.S. Patent No. 7,192,160 B2 (Ex. 1013, "Reiff"). Paper 14 ("Inst. Dec.") at 56–64. After trial, the Board issued a Final Written Decision determining, *inter alia*, that Petitioner had met its burden of showing, by a preponderance of evidence, claims 13 and 15 are unpatentable under § 103(a) as obvious over Reiff. Paper 47 ("FWD") at 133–155.

Patent Owner filed a Request for Director Review. Paper 49 ("Req."). The Director delegated review to a Delegated Rehearing Panel to determine whether the original Board panel misapprehended or overlooked any issue, including whether the Board panel's decision regarding claim 13 (1) contains inconsistent factual findings or improper gap filling or (2) relies on argument and evidence from Petitioner's Reply (Paper 35, "Pet. Reply") that is outside the scope of a proper reply. Paper 53 ("DRP Order"). Petitioner filed a Response to the Delegation Order (Paper 55) and Patent Owner filed a Reply to Petitioner's Response (Paper 56).

Having reviewed the record, we conclude that the Board panel relied on new arguments and evidence outside the scope of a proper reply in determining claims 13 and 15 are unpatentable as obvious over Reiff. Absent these new arguments and evidence, Petitioner failed to meet its burden of demonstrating claims 13 and 15 are unpatentable. We therefore

grant rehearing and vacate the portion of the Board's Final Written Decision finding claims 13 and 15 obvious over Reiff.

II. ANALYSIS

Independent claim 13 recites a switch comprising a "body" (element [13a]), an electrical "coupling feature disposed on the body" (element [13b]), and "an actuator disposed on the body" (element [13c]). Ex. 1001, 15:19–16:5; Pet. 41–45 (labelling claim limitations as 13a, 13b, and 13c).

In its Request, Patent Owner argues that Petitioner improperly "changed its argument" in its Reply to address deficiencies in the Petition related to element [13b]. Req. 6–7. According to Patent Owner, "Petitioner's Reply combination was not a simple expansion of what was argued in the Petition" but, rather, a new "obviousness theory." Paper 56 at 2–3.

We agree.

In the Petition, Petitioner argues that independent claim 13 and dependent claim 15 are anticipated and/or rendered obvious by Reiff.[1] Pet. 15, 82–89. For limitations [13a]–[13c], Petitioner relies on control box 64 and switch 66, depicted and highlighted in Reiff's Figure 2, below:

[1] Patent Owner argues that the Petition contains inconsistent identification of the basis for unpatentability in Ground 3, with some portions referring only to anticipation and other portions referring to both anticipation and obviousness. *See* Req. 3–4. Because we find that Petitioner's Reply exceeded the proper scope of reply for either anticipation or obviousness, that argument is moot.

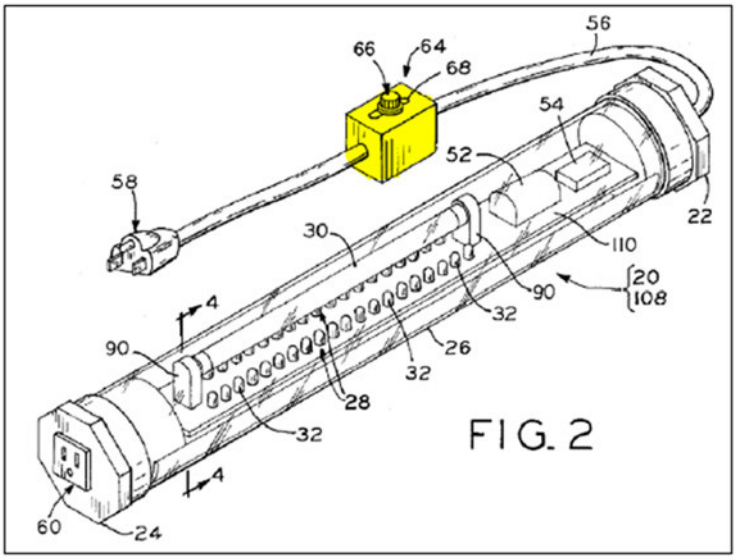

Id. at 85. Figure 2 shows tubular light 20 having fluorescent lamp 30, LEDs 32, electrical cord 56, and control box 64, which includes switch 66 for selecting between different light sources. Ex. 1013, 3:28–30, 4:16–30.

In the Petition, Petitioner asserts that Reiff's control box 64 (highlighted yellow above) provides a switch "body" ([13a]), and that Reiff's switch 66 is an "actuator disposed on the body" ([13c]) because it is "located on the body formed by the control box 64." Pet. 85, 87–88. As to limitation [13b], Petitioner asserts that Reiff discloses a coupling feature, but does not identify expressly any disclosure that the coupling feature is "disposed on the body." *See id.* at 84–89. Rather, Petitioner argues that because Reiff's "control box 64 is located on the electrical cable 56, it is necessarily electrically coupled to electrical cable 56, and therefore must include at least one coupling feature." *Id.* at 86–87; *see also id.* at 85–86 (explaining that "both the input and output terminals of the control box 64 (and switch 66) must be electrically connected to the cable 56 by soldering, screw terminals, spade lugs, pins, or a myriad of other connectors")).

Petitioner presents a different theory in its Reply. Specifically, Petitioner argues that Reiff's control box houses a slide switch, which has its

own "body" on which a "coupling feature" is "disposed." Pet. Reply 27–30. Petitioner also cites new evidence allegedly showing the "well-known" construction of a slide switch within the control box. *Id.* (citing Ex. 1029; Ex. 1027 ¶¶ 103–107). Petitioner argues that the "body" of element [13a] is a switch body found within Reiff's control box and that person of ordinary skill in the art would have understood this body to have a well-known structure that provides the claimed "coupling feature"—this argument, however, was not presented in the Petition.[2] *See* Pet. 82–89; *accord Intelligent Bio-Sys., Inc. v. Illumina Cambridge Ltd.*, 821 F.3d 1359, 1369 (Fed. Cir. 2016) ("It is of the utmost importance that petitioners in the IPR proceedings adhere to the requirement that the initial petition identify 'with particularity' the 'evidence that supports the grounds for the challenge to each claim.'"). Rather, Petitioner made this argument only after (a) the Institution Decision preliminarily found that Reiff does not disclose a coupling feature "disposed on the body" (*see* Inst. Dec. 62), and (b) Patent Owner's Response argued that control box 64 is not a switch "body" and need not be electrically coupled to cable 56 (*see* PO Resp. 38–40).

Accordingly, we find that Petitioner improperly advanced a new theory of unpatentability of claim 13 over Reiff in the Reply, and relied on

---

[2] At most, the Petition states that the control box "provides and necessarily includes" the claimed "body." Pet. 85. We are not persuaded that this statement identifies, with sufficient particularity, the argument advanced in Petitioner's Reply. First, we interpret "provides" as identifying the control box as the "body." Second, although the term "includes" might, in some contexts, be read as "houses," the remainder of the Petition indicates a different, more generic usage. *See, e.g.,* Pet. 77 (in Ground 2, arguing that "CCT switch 30 includes a body"); *see also id.* 24 ("light fixture includes a housing"), 25 ("housing includes a flange"), 28 ("light fixture includes a cable").

new evidence to do so. A petitioner's reply can "explain[] how its original petition was correct," but it cannot, after a patent owner "point[s] out the flaws of this position," articulate "an entirely new theory . . . absent from the petition." *Wasica Fin. GmbH v. Cont'l Auto. Sys., Inc.*, 853 F.3d 1272, 1286–87 (Fed. Cir. 2017). "Shifting arguments in this fashion is foreclosed by statute, [Federal Circuit] precedent, and Board guidelines." *Id.* Because the Petition failed to establish that Reiff teaches a "coupling feature disposed on the body," we agree with Patent Owner that, absent new argument and evidence, Petitioner fails to show, by a preponderance of the evidence, that claims 13 and 15 are unpatentable.

In consideration of the foregoing, it is:

ORDERED that Director Review is *granted*;

FURTHER ORDERED that the Board's Final Written Decision is modified to conclude that claims 13 and 15 have not been shown to be unpatentable over Reiff; and

FURTHER ORDERED that Board's Final Written Decision is maintained in all other respects.

In summary:

Claims	35 U.S.C. §	Reference(s)	Claims Shown Unpatentable	Claims Not Shown Unpatentable
1, 3, 6–9,11–13,15, 17–19	102	Chaimberg		1, 3, 6–9,11–13, 15, 17–19
1, 3, 6–9,11–13,15, 17–19	103	Chaimberg	1, 3, 6, 7, 9, 11, 12, 18, 19	8, 13, 15, 17
2, 4, 5, 10, 14, 16, 20	103	Chaimberg, Roberge	2, 4, 5, 10, 14, 20	16
13, 15	102	Reiff		13, 15
13, 15	103	Reiff		13, 15

Claims	35 U.S.C. §	Reference(s)	Claims Shown Unpatentable	Claims Not Shown Unpatentable
1, 2–5, 7, 9–13, 15, 16, 19, 20	102	Halliwell		13, 15, 16
1, 2–5, 7, 9–13, 15, 16, 19, 20	103	Halliwell		13, 15, 16
Overall Outcome			1–7, 9–12, 14, 18–20	8, 13, 15–17

FOR PETITIONER:

Joshua R. Nightingale
Vishal V. Khatri
Jeffrey S. Messing
JONES DAY
jrnightingale@jonesday.com
vkhatri@jonesday.com
jmessing@jonesday.com

Charles J. Meyer
Scott J. Collins
WOODARD, EMHARDT, HENRY, REEVES & WAGNER LLP
cjmeyer@uspatent.com
scollins@uspatent.com

FOR PATENT OWNER:

Justin J. Oliver
John D. Carlin
Jason M. Dorsky
Stephen K. Yam
VENABLE LLP
joliver@Venable.com
jcarlin@Venable.com
jmdorsky@Venable.com
syam@Venable.com
Signify-IPRs@Venable.com