US 20020115478A1

(19) United States

(12) Patent Application Publication (10) Pub. No.: US 2002/0115478 A1

Fujisawa et al. (43) Pub. Date: Aug. 22, 2002

(54) MOBILE TELEPHONE AND RADIO COMMUNICATION DEVICE COOPERATIVELY PROCESSING INCOMING CALL

(76) Inventors: **Teruhiko Fujisawa**, Nagano-ken (JP); **Hiroyuki Chihara**, Nagano-ken (JP); **Hideo Fukuchi**, Nagano-ken (JP)

Correspondence Address:
EPSON RESEARCH AND DEVELOPMENT INC
INTELLECTUAL PROPERTY DEPT
150 RIVER OAKS PARKWAY, SUITE 225
SAN JOSE, CA 95134 (US)

(21) Appl. No.: **10/049,531**

(22) PCT Filed: **Jun. 21, 2001**

(86) PCT No.: **PCT/JP01/05303**

Related U.S. Application Data

(60) Application No. PCT/JP01/05303, filed on Jun. 21, 2001.

(30) **Foreign Application Priority Data**

Jun. 21, 2000	(JP)	2000-186929
Mar. 2, 2001	(JP)	2001-058594
Mar. 7, 2001	(JP)	2001-063974
Jun. 20, 2001	(JP)	2001-187275
Jun. 20, 2001	(JP)	2001-187277
Jun. 20, 2001	(JP)	2001-187278

Publication Classification

(51) **Int. Cl.**[7] **H04M 1/00**

(52) **U.S. Cl.** **455/567**; 455/458; 455/426; 455/414

(57) **ABSTRACT**

When there is an incoming call to a mobile telephone, it sends an incoming call notification signal to a watch-shaped information processing device. When the watch-shaped information processing device receives the incoming call notification signal, it notifies its user of the incoming call. The watch-shaped information processing device can also sends user's instructions to the mobile telephone. The instructions cause the mobile telephone to conduct processing for incoming call such as processing for asking the caller to wait, or asking the caller to leave a message.

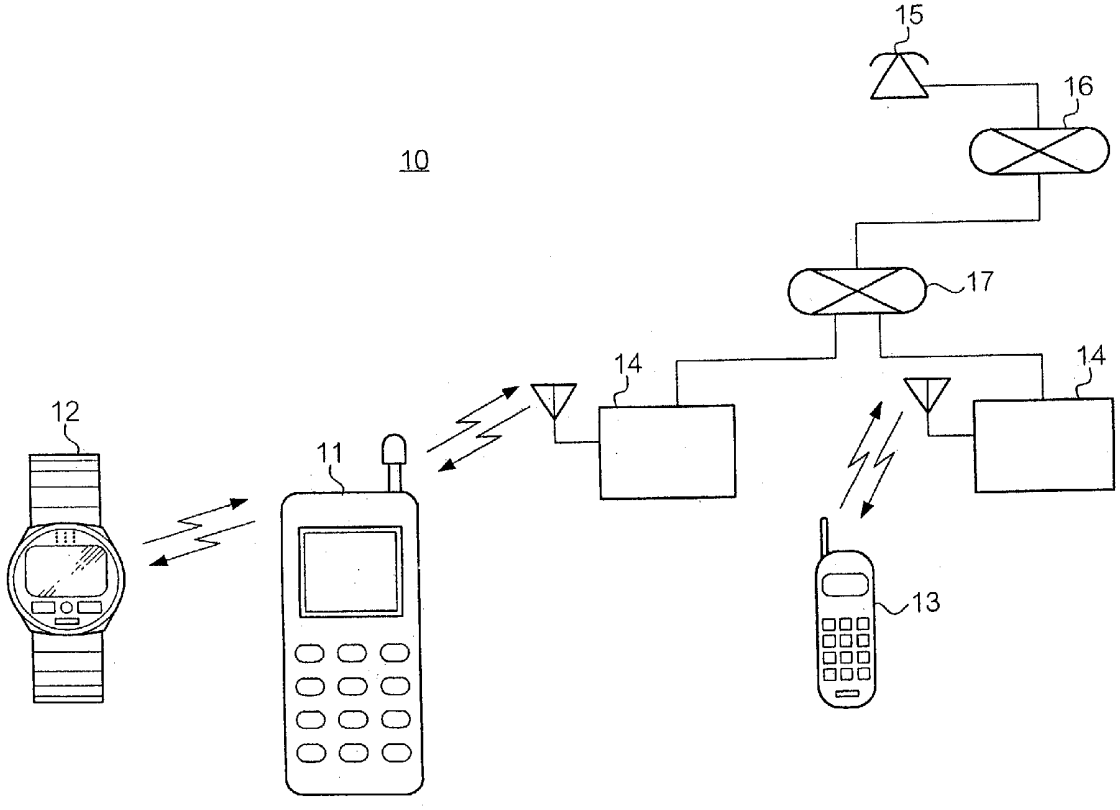

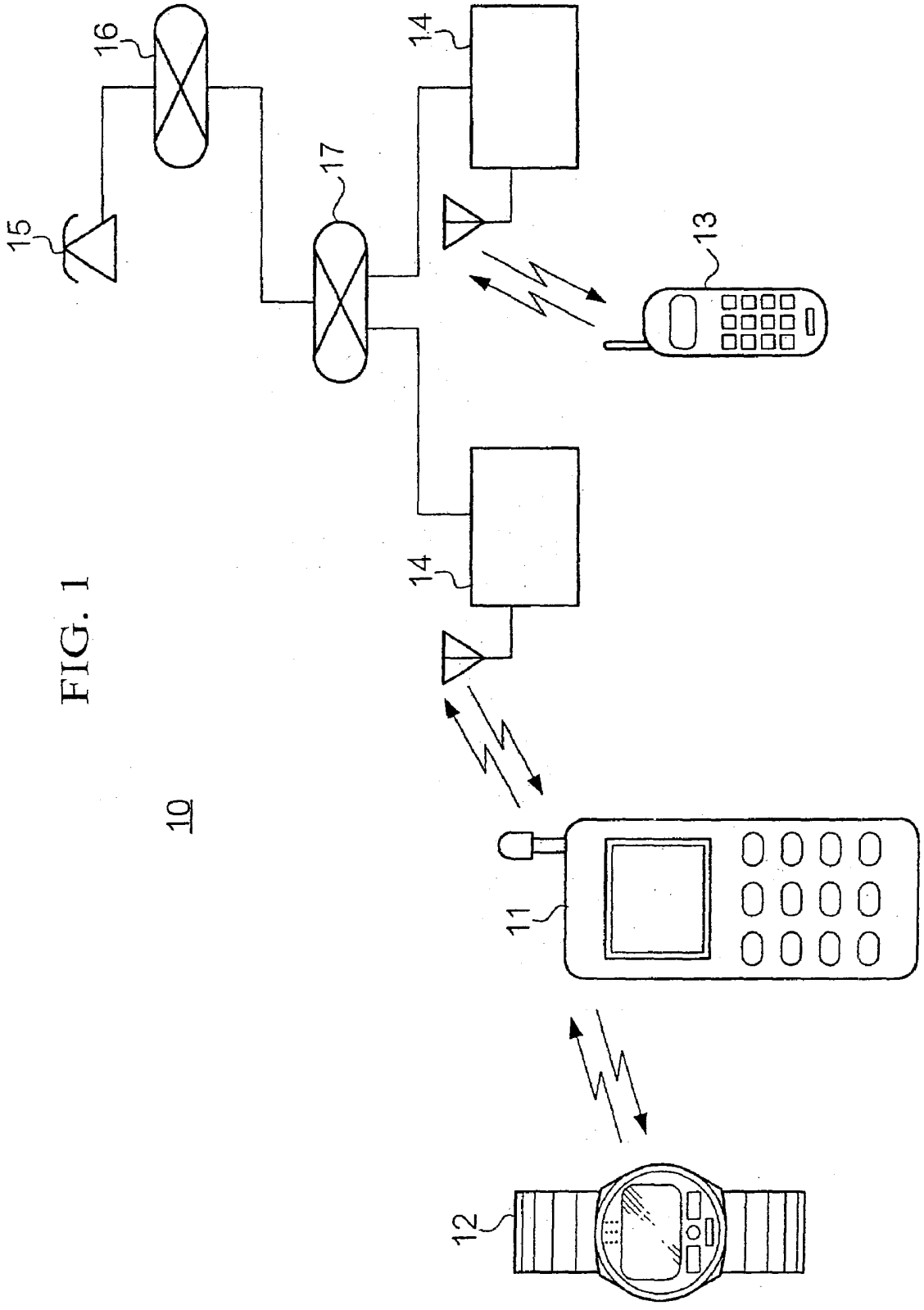

FIG. 1

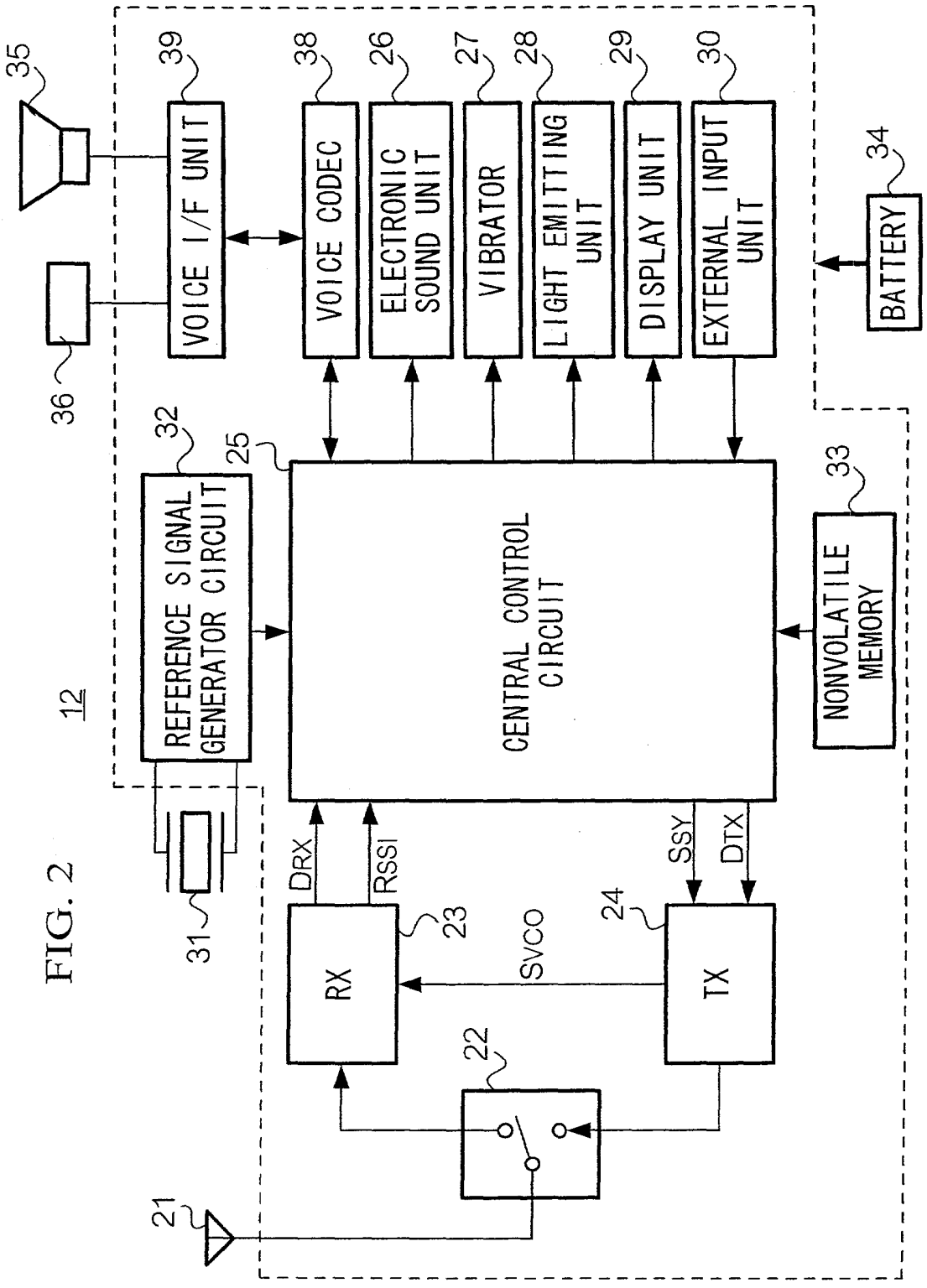
35
36
39
VOICE I/F UNIT
38
VOICE CODEC
26
ELECTRONIC SOUND UNIT
27
VIBRATOR
28
LIGHT EMITTING UNIT
29
DISPLAY UNIT
30
EXTERNAL INPUT UNIT
34
BATTERY
12
32
REFERENCE SIGNAL GENERATOR CIRCUIT
25
CENTRAL CONTROL CIRCUIT
33
NONVOLATILE MEMORY
31
DRX
RSSI
SSY
DTX
23
SVCO
24
RX
TX
22
21

FIG. 2

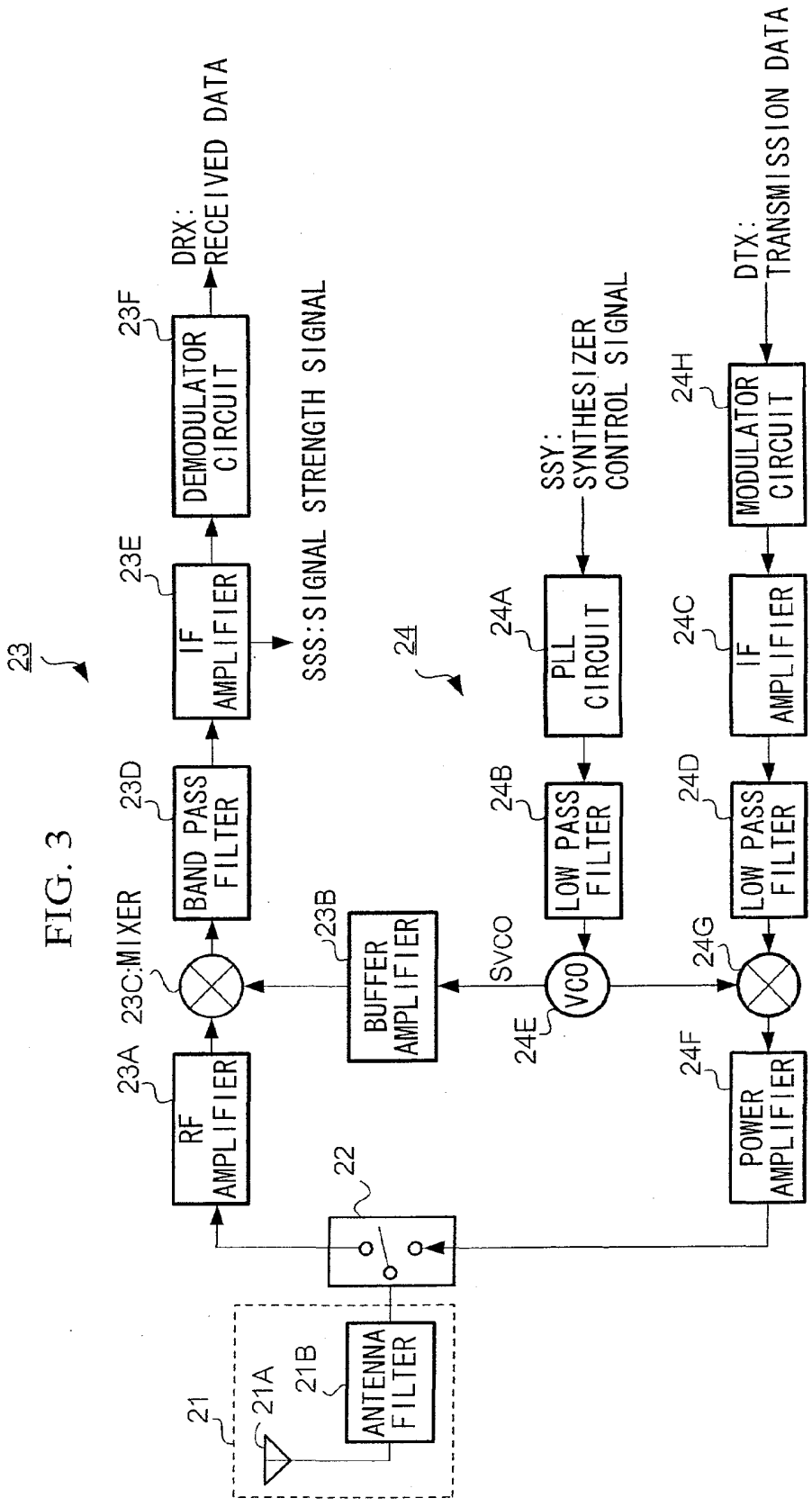
23
23A
RF AMPLIFIER
23C:MIXER
23D
BAND PASS FILTER
23E
IF AMPLIFIER
23F
DEMODULATOR CIRCUIT
DRX: RECEIVED DATA
SSS: SIGNAL STRENGTH SIGNAL
23B
BUFFER AMPLIFIER
22
21
21A
21B
ANTENNA FILTER
24
24A
PLL CIRCUIT
SSY: SYNTHESIZER CONTROL SIGNAL
24B
LOW PASS FILTER
SVCO
24E
VCO
24G
24F
POWER AMPLIFIER
24C
IF AMPLIFIER
24D
LOW PASS FILTER
24H
MODULATOR CIRCUIT
DTX: TRANSMISSION DATA

FIG. 3

FIG. 4

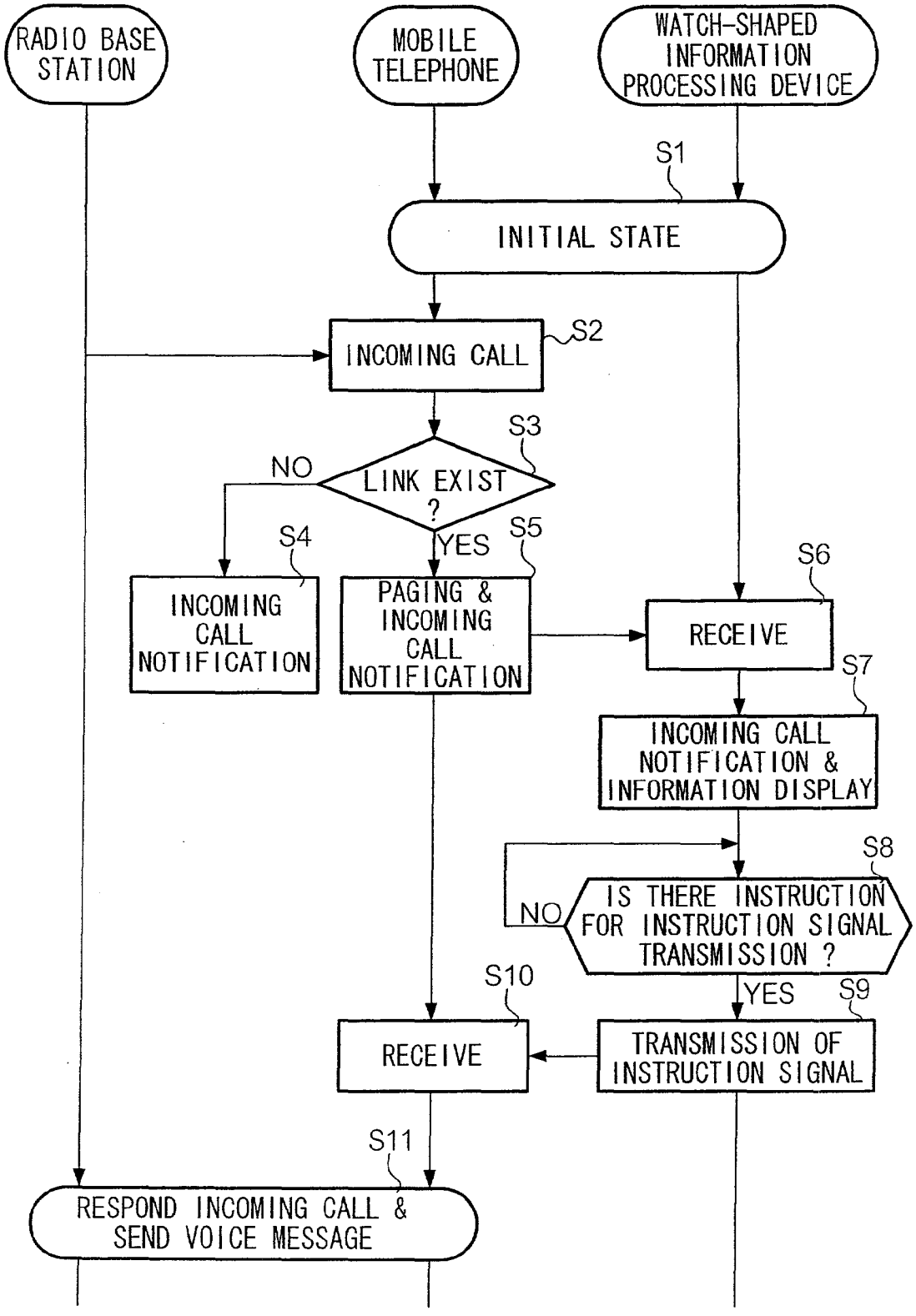
RADIO BASE STATION
MOBILE TELEPHONE
WATCH-SHAPED INFORMATION PROCESSING DEVICE
S1
INITIAL STATE
INCOMING CALL
S2
S3
LINK EXIST ?
NO
YES
S4
INCOMING CALL NOTIFICATION
S5
PAGING & INCOMING CALL NOTIFICATION
S6
RECEIVE
S7
INCOMING CALL NOTIFICATION & INFORMATION DISPLAY
S8
IS THERE INSTRUCTION FOR INSTRUCTION SIGNAL TRANSMISSION ?
NO
YES
S9
TRANSMISSION OF INSTRUCTION SIGNAL
S10
RECEIVE
S11
RESPOND INCOMING CALL & SEND VOICE MESSAGE

FIG. 5

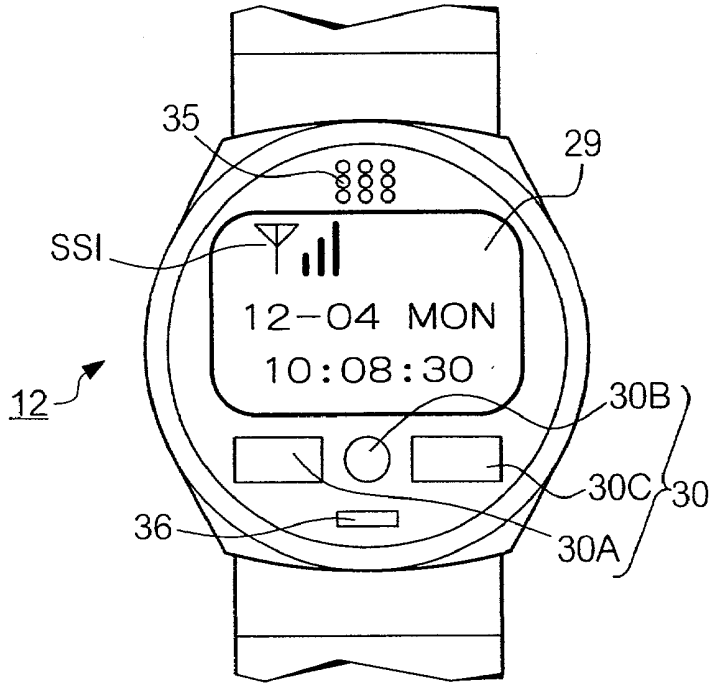
35
29
SSI
12-04 MON
10:08:30
12
30B
30C
30
36
30A

FIG. 6

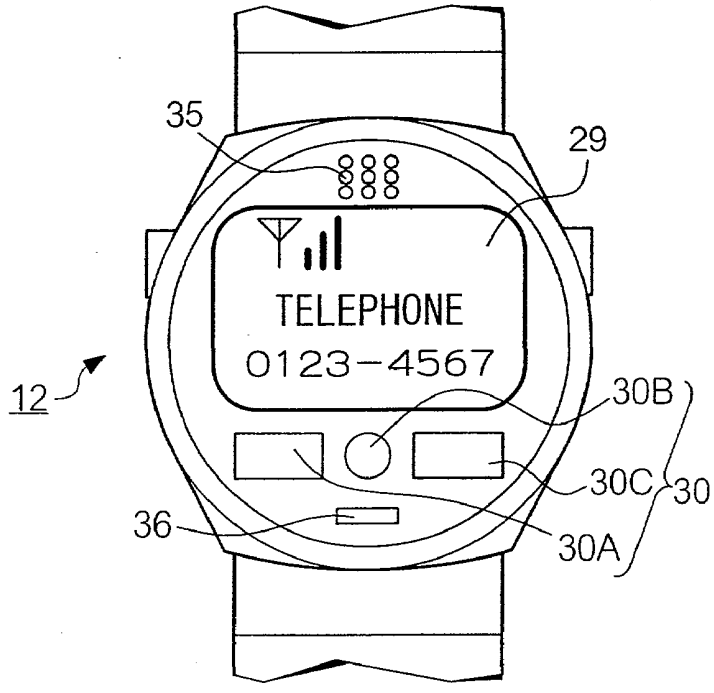
35
29
TELEPHONE
0123-4567
12
30B
30C
30
36
30A

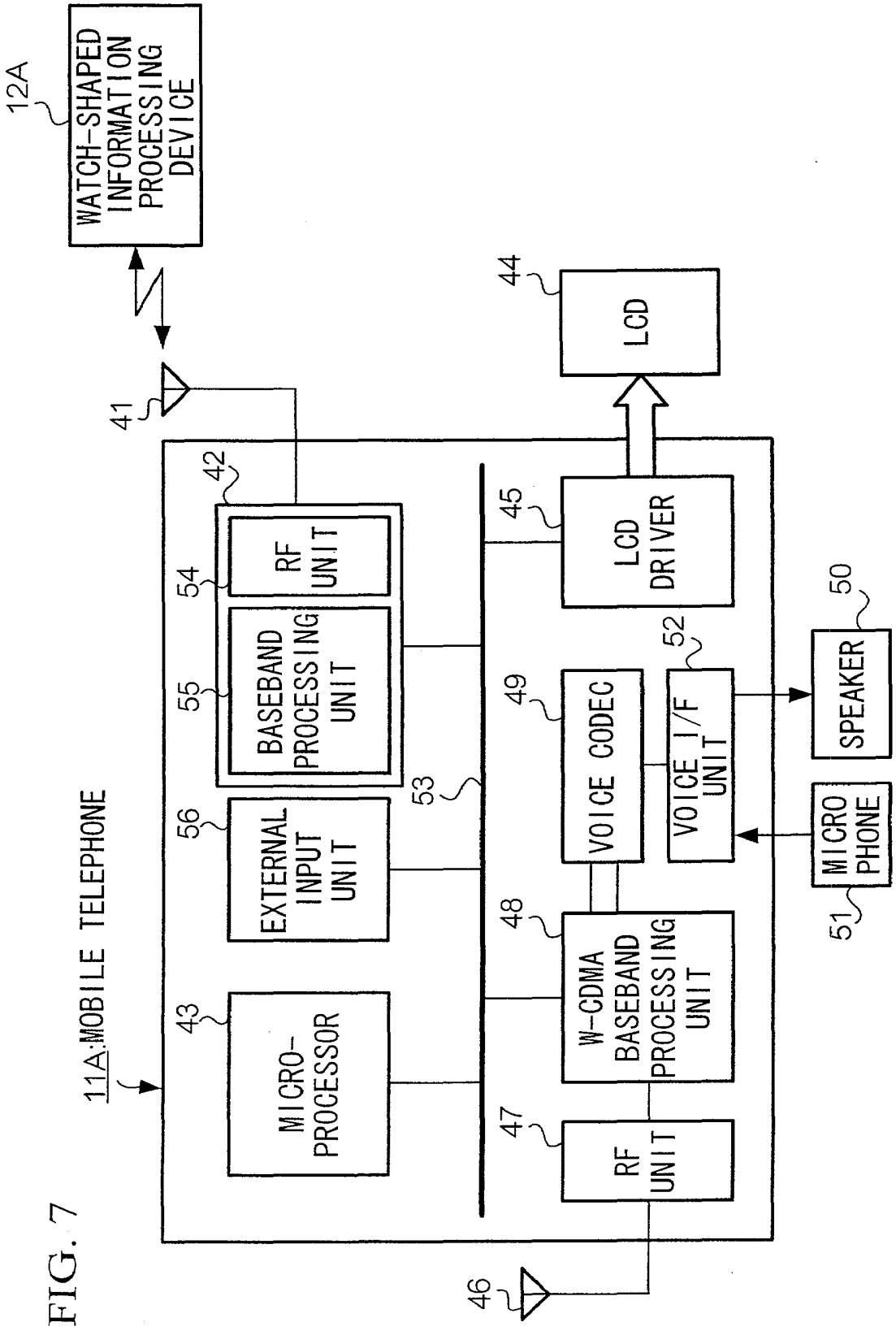
12A
WATCH-SHAPED INFORMATION PROCESSING DEVICE
41
11A:MOBILE TELEPHONE
42
54
RF UNIT
55
BASEBAND PROCESSING UNIT
56
EXTERNAL INPUT UNIT
43
MICRO-PROCESSOR
53
44
LCD
45
LCD DRIVER
49
VOICE CODEC
52
VOICE I/F UNIT
50
SPEAKER
MICRO PHONE
51
48
W-CDMA BASEBAND PROCESSING UNIT
47
RF UNIT
46

FIG. 7

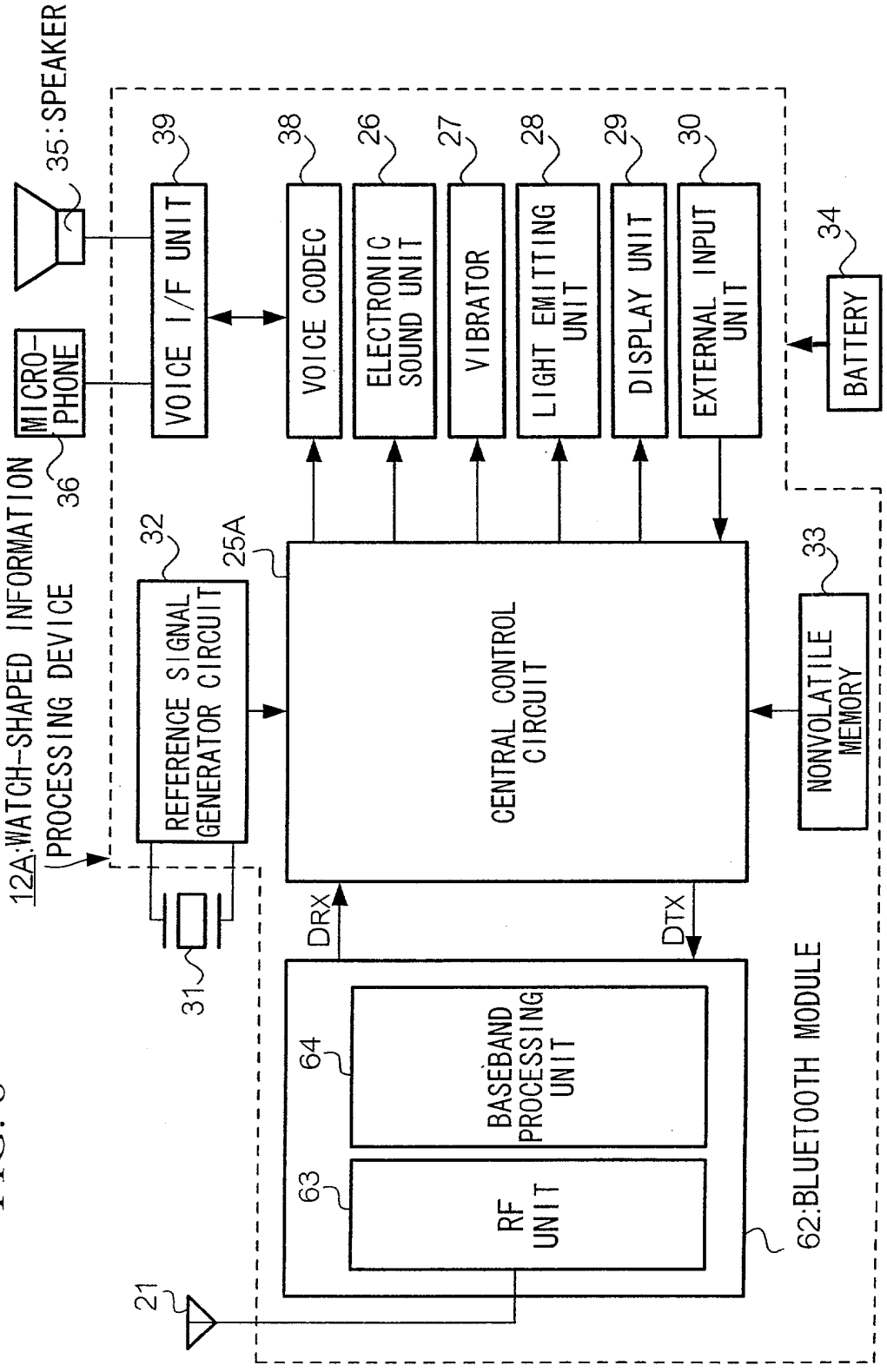
35:SPEAKER
MICRO-PHONE
36
12A:WATCH-SHAPED INFORMATION PROCESSING DEVICE
39
VOICE I/F UNIT
38
VOICE CODEC
26
ELECTRONIC SOUND UNIT
27
VIBRATOR
28
LIGHT EMITTING UNIT
29
DISPLAY UNIT
30
EXTERNAL INPUT UNIT
34
BATTERY
32
REFERENCE SIGNAL GENERATOR CIRCUIT
25A
CENTRAL CONTROL CIRCUIT
33
NONVOLATILE MEMORY
31
DRX
DTX
64
BASEBAND PROCESSING UNIT
63
RF UNIT
62:BLUETOOTH MODULE
21

FIG. 8

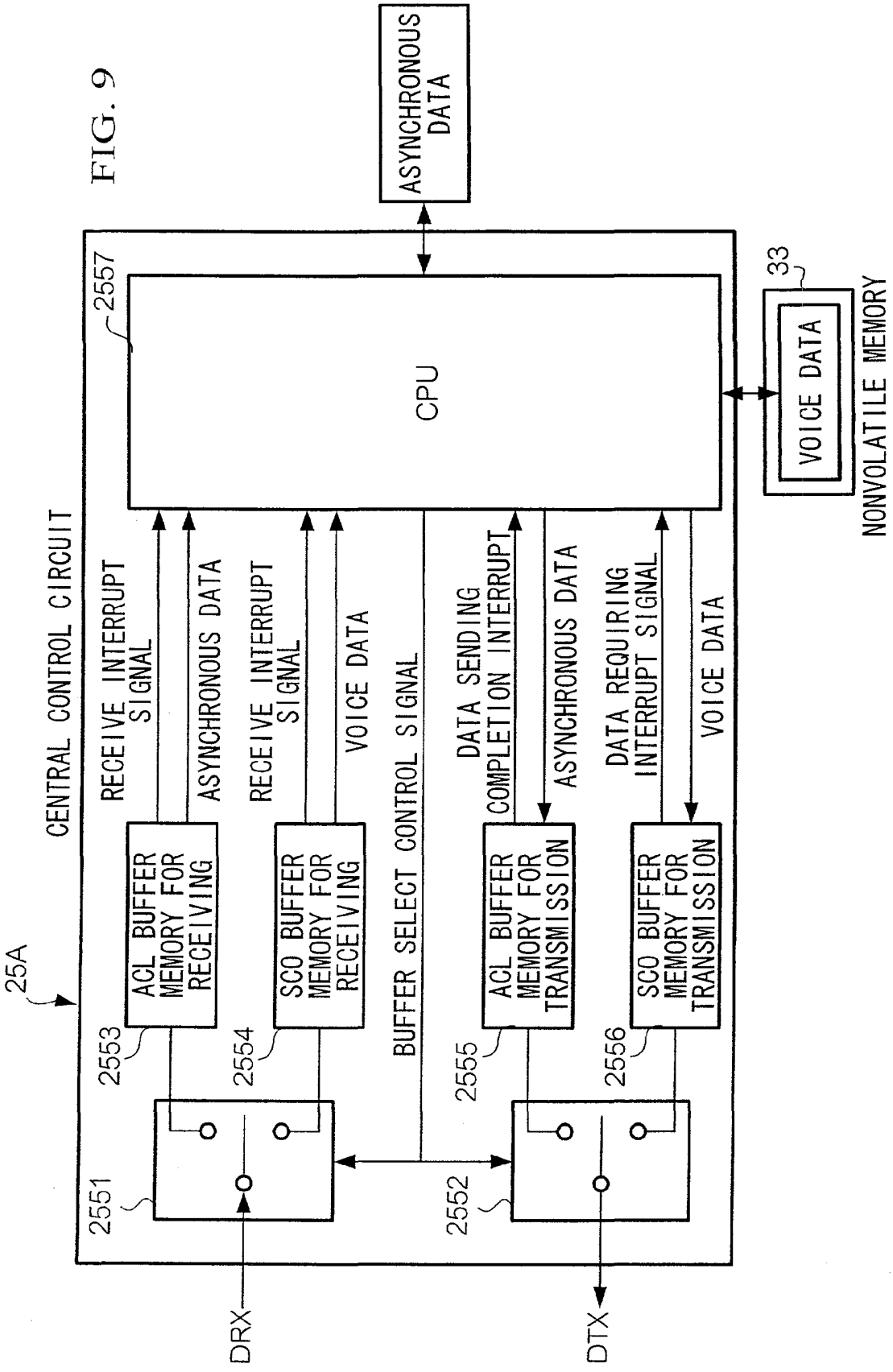
FIG. 9
ASYNCHRONOUS DATA
CENTRAL CONTROL CIRCUIT
25A
2557
CPU
33
VOICE DATA
NONVOLATILE MEMORY
RECEIVE INTERRUPT SIGNAL
ASYNCHRONOUS DATA
RECEIVE INTERRUPT SIGNAL
VOICE DATA
BUFFER SELECT CONTROL SIGNAL
DATA SENDING COMPLETION INTERRUPT
ASYNCHRONOUS DATA
DATA REQUIRING INTERRUPT SIGNAL
VOICE DATA
ACL BUFFER MEMORY FOR RECEIVING
SCO BUFFER MEMORY FOR RECEIVING
ACL BUFFER MEMORY FOR TRANSMISSION
SCO BUFFER MEMORY FOR TRANSMISSION
2553
2554
2555
2556
2551
2552
DRX
DTX

FIG. 10

MESSAGE TYPE	MEMORY ADDRESS
PLEASE WAIT MESSAGE	ad0001~ad0010
CALL RESPONSE MESSAGE	ad0011~ad0020
CALLER'S MESSAGE No1	ad0021~ad0030
CALLER'S MESSAGE No2	ad0031~ad0040
CALLER'S MESSAGE No3	ad0041~ad0050
CALLER'S MESSAGE No4	ad0051~ad0060
.....	.....
.....	.....
CALLER'S MESSAGE No10	ad0111~ad0120

FIG. 11

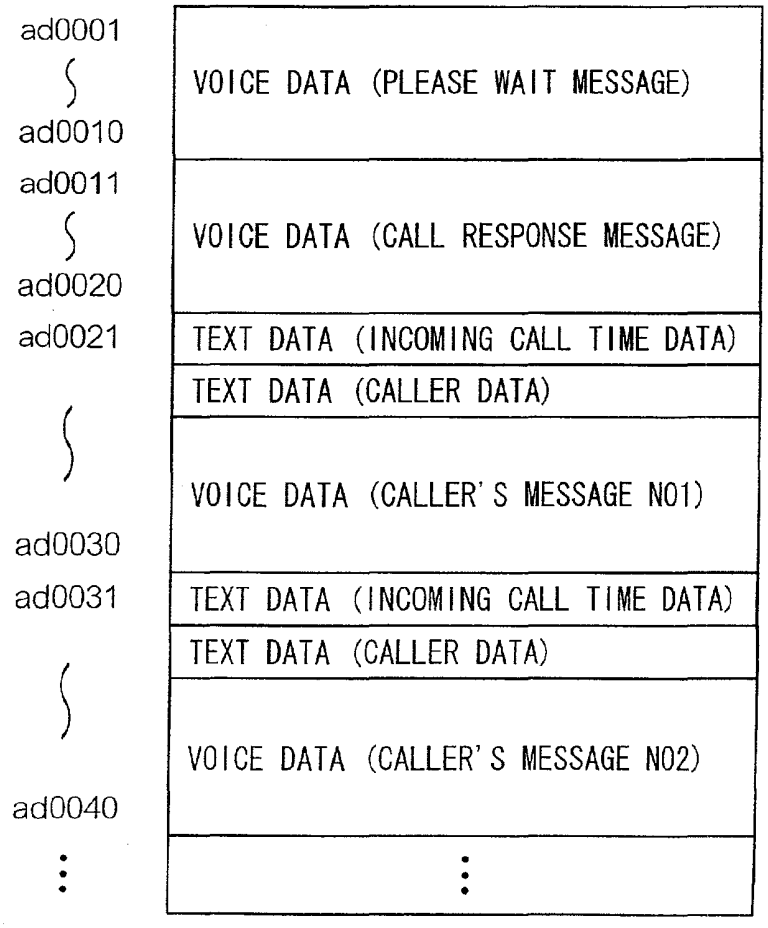

FIG. 12

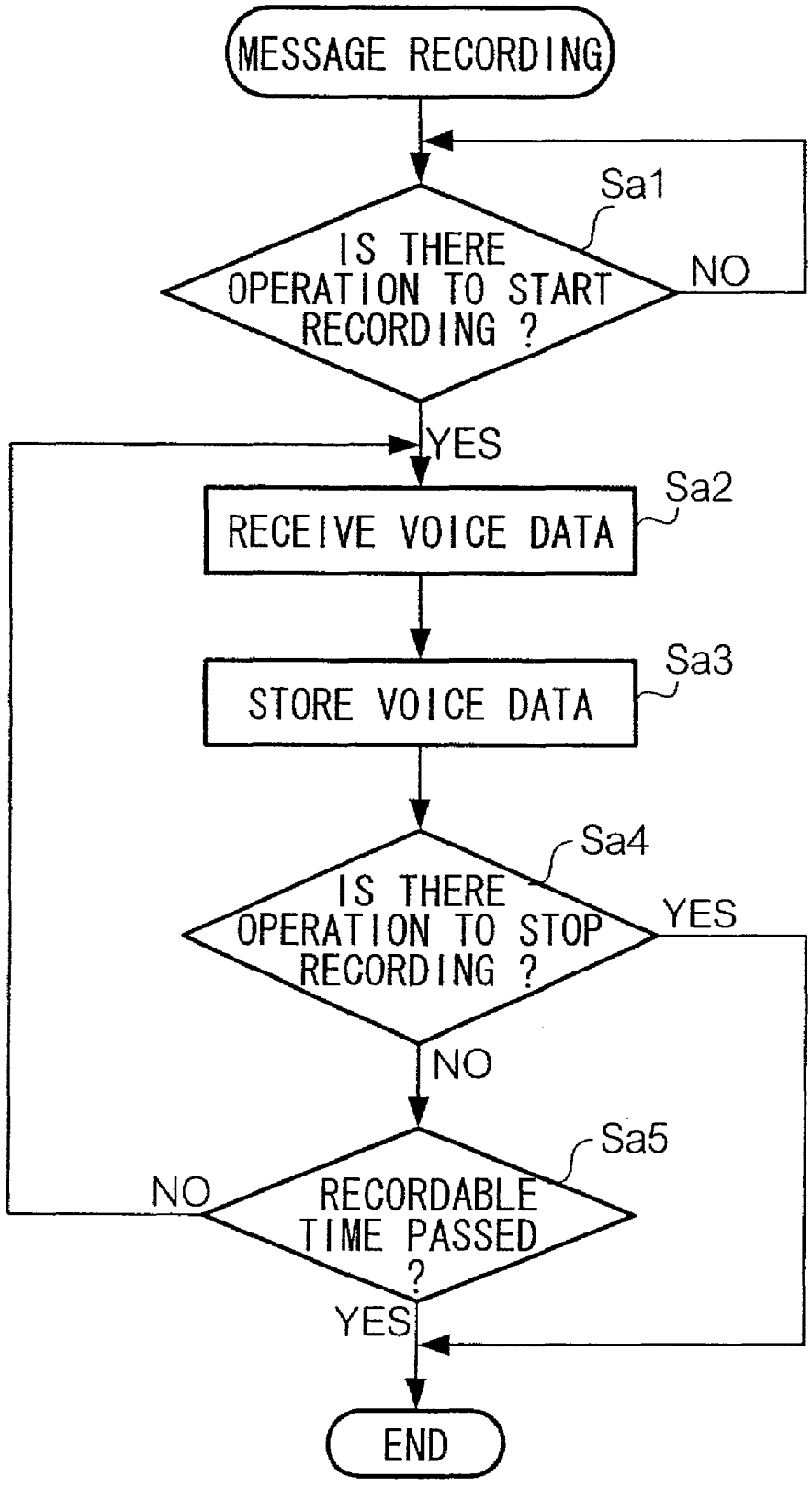
MESSAGE RECORDING
Sa1
IS THERE OPERATION TO START RECORDING ?
NO
YES
Sa2
RECEIVE VOICE DATA
Sa3
STORE VOICE DATA
Sa4
IS THERE OPERATION TO STOP RECORDING ?
YES
NO
Sa5
NO
RECORDABLE TIME PASSED ?
YES
END

FIG. 13

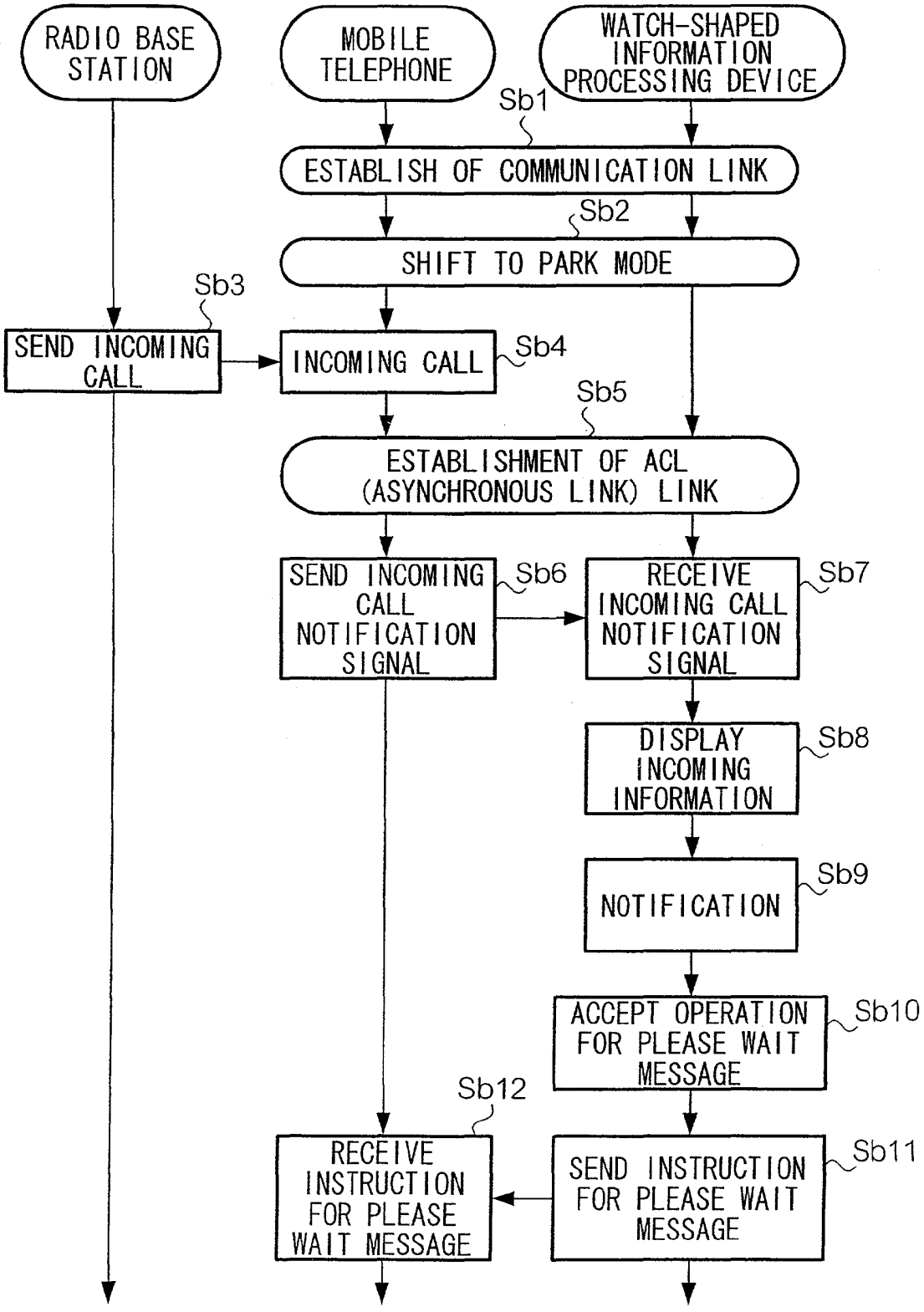
RADIO BASE STATION
MOBILE TELEPHONE
WATCH-SHAPED INFORMATION PROCESSING DEVICE
Sb1
ESTABLISH OF COMMUNICATION LINK
Sb2
SHIFT TO PARK MODE
Sb3
SEND INCOMING CALL
INCOMING CALL
Sb4
Sb5
ESTABLISHMENT OF ACL (ASYNCHRONOUS LINK) LINK
SEND INCOMING CALL NOTIFICATION SIGNAL
Sb6
RECEIVE INCOMING CALL NOTIFICATION SIGNAL
Sb7
DISPLAY INCOMING INFORMATION
Sb8
NOTIFICATION
Sb9
ACCEPT OPERATION FOR PLEASE WAIT MESSAGE
Sb10
Sb12
RECEIVE INSTRUCTION FOR PLEASE WAIT MESSAGE
SEND INSTRUCTION FOR PLEASE WAIT MESSAGE
Sb11

FIG. 14

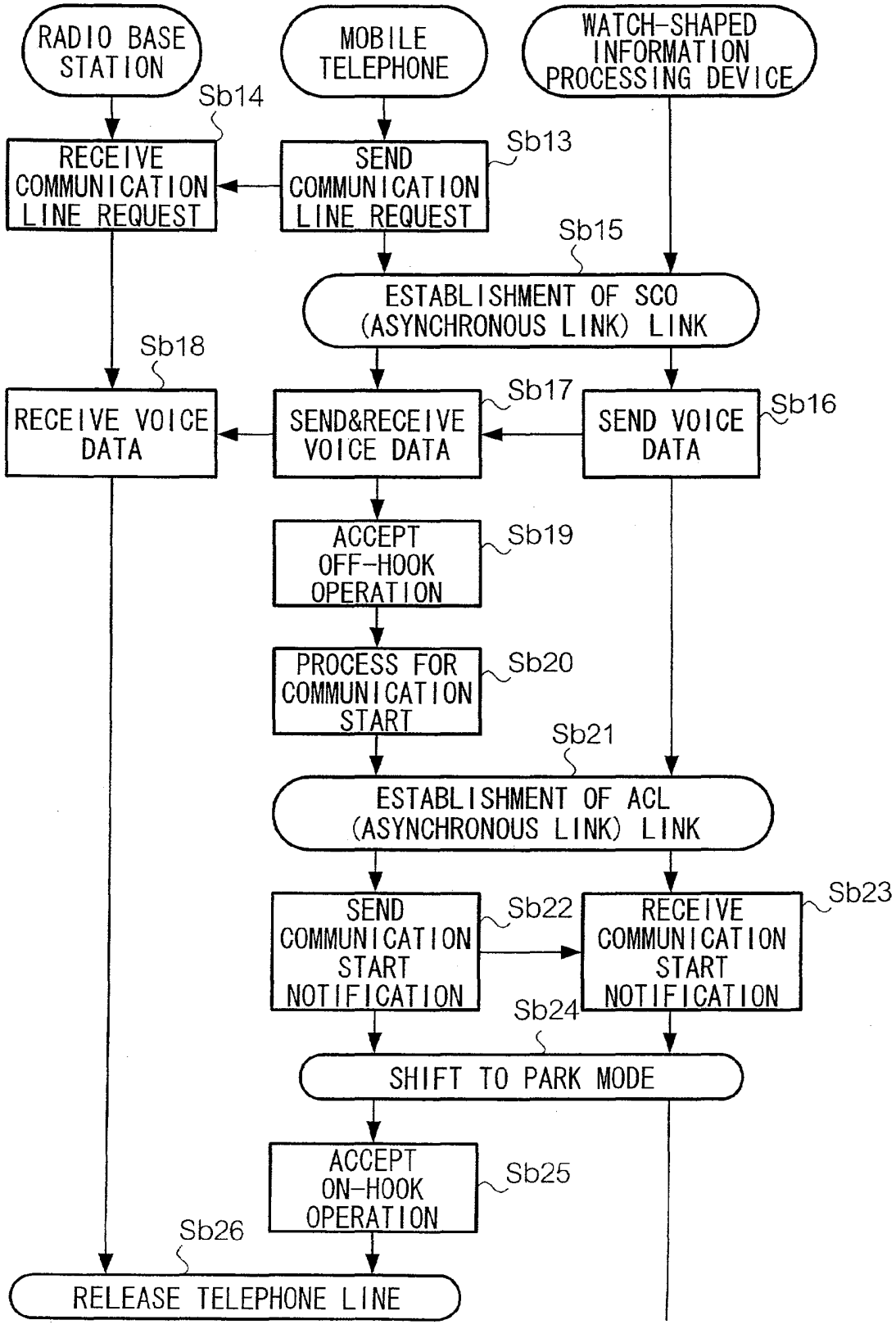
RADIO BASE STATION
MOBILE TELEPHONE
WATCH-SHAPED INFORMATION PROCESSING DEVICE
Sb14
RECEIVE COMMUNICATION LINE REQUEST
Sb13
SEND COMMUNICATION LINE REQUEST
Sb15
ESTABLISHMENT OF SCO (ASYNCHRONOUS LINK) LINK
Sb18
RECEIVE VOICE DATA
Sb17
SEND&RECEIVE VOICE DATA
Sb16
SEND VOICE DATA
ACCEPT OFF-HOOK OPERATION
Sb19
PROCESS FOR COMMUNICATION START
Sb20
Sb21
ESTABLISHMENT OF ACL (ASYNCHRONOUS LINK) LINK
SEND COMMUNICATION START NOTIFICATION
Sb22
RECEIVE COMMUNICATION START NOTIFICATION
Sb23
Sb24
SHIFT TO PARK MODE
ACCEPT ON-HOOK OPERATION
Sb25
Sb26
RELEASE TELEPHONE LINE

FIG. 15

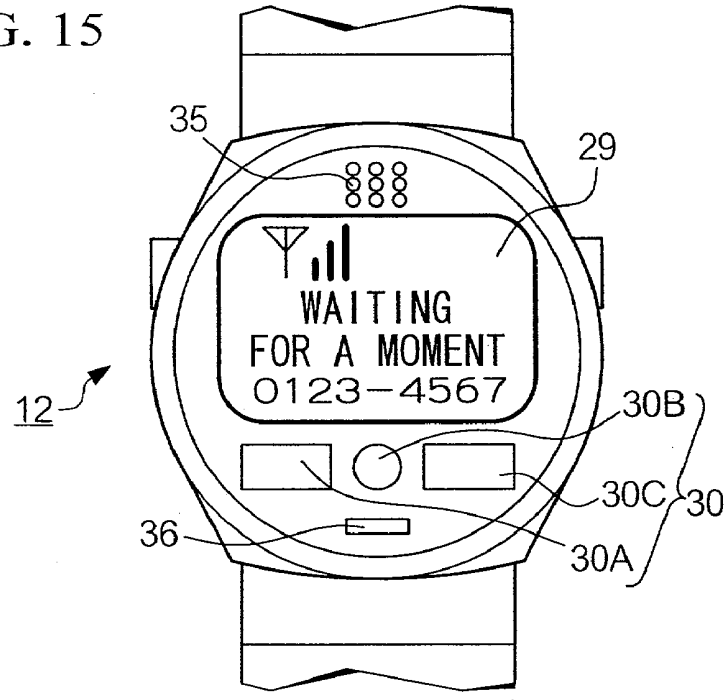
35
29
WAITING
FOR A MOMENT
0123-4567
12
30B
30C
30
36
30A

FIG. 18

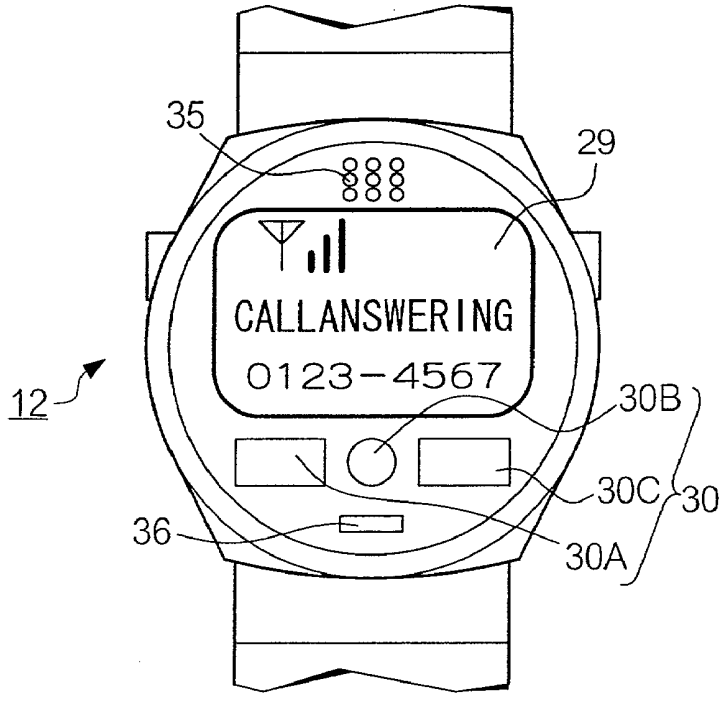
35
29
CALLANSWERING
0123-4567
12
30B
30C
30
36
30A

FIG. 16

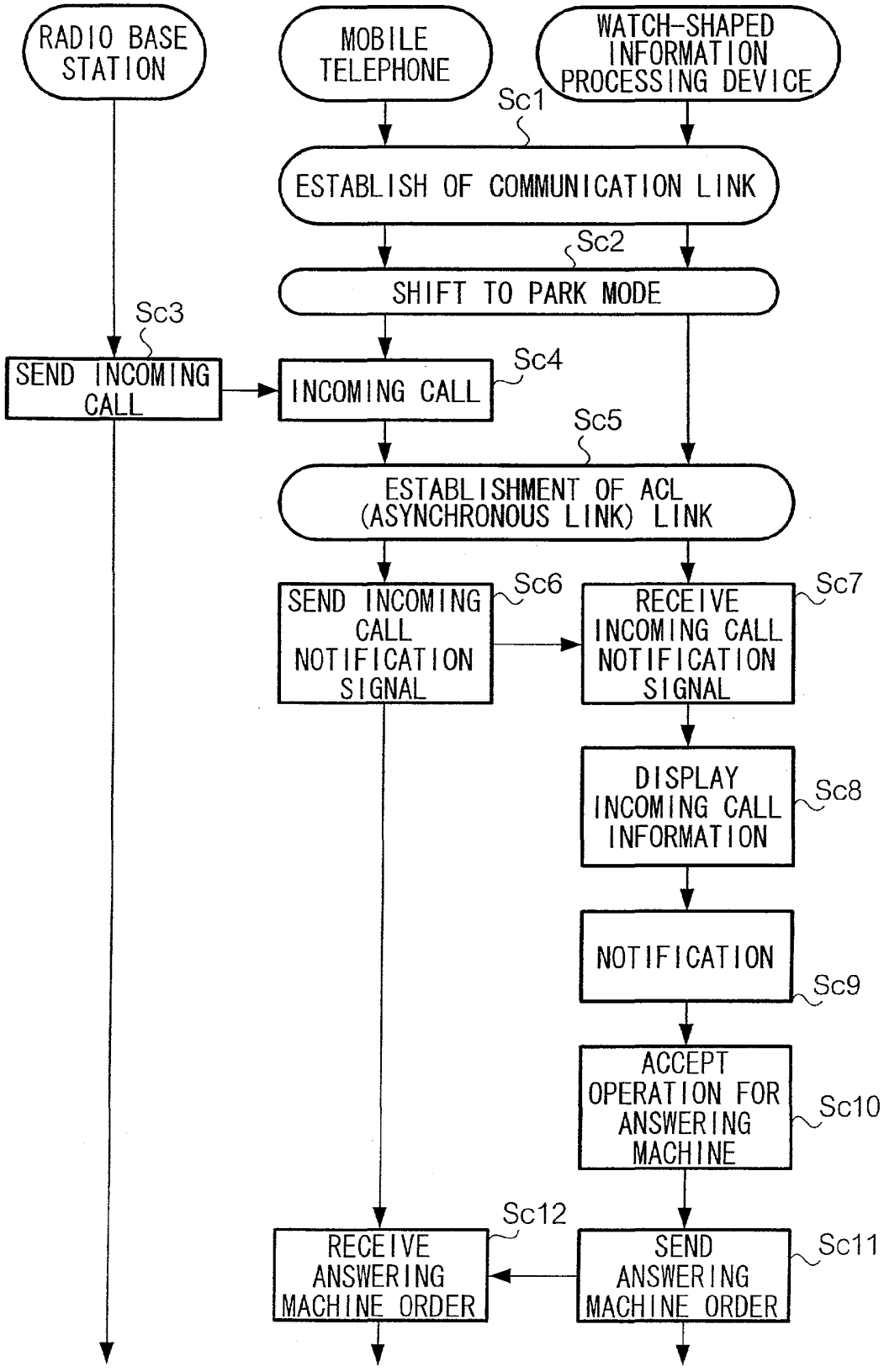
RADIO BASE STATION
MOBILE TELEPHONE
WATCH-SHAPED INFORMATION PROCESSING DEVICE
Sc1
ESTABLISH OF COMMUNICATION LINK
Sc2
SHIFT TO PARK MODE
Sc3
SEND INCOMING CALL
INCOMING CALL
Sc4
Sc5
ESTABLISHMENT OF ACL (ASYNCHRONOUS LINK) LINK
SEND INCOMING CALL NOTIFICATION SIGNAL
Sc6
RECEIVE INCOMING CALL NOTIFICATION SIGNAL
Sc7
DISPLAY INCOMING CALL INFORMATION
Sc8
NOTIFICATION
Sc9
ACCEPT OPERATION FOR ANSWERING MACHINE
Sc10
Sc12
RECEIVE ANSWERING MACHINE ORDER
SEND ANSWERING MACHINE ORDER
Sc11

FIG. 17

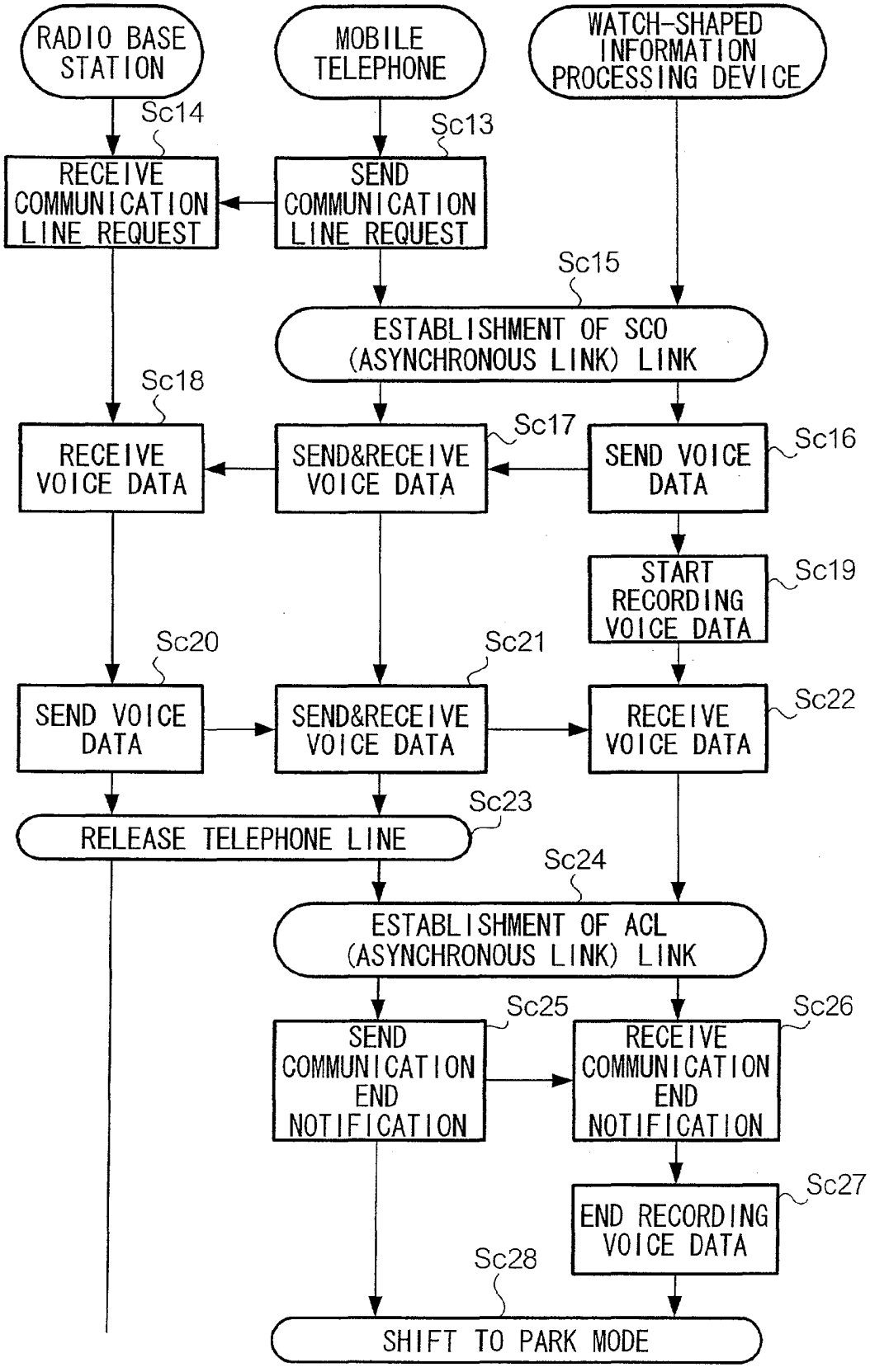
RADIO BASE STATION
MOBILE TELEPHONE
WATCH-SHAPED INFORMATION PROCESSING DEVICE
Sc14
Sc13
RECEIVE COMMUNICATION LINE REQUEST
SEND COMMUNICATION LINE REQUEST
Sc15
ESTABLISHMENT OF SCO (ASYNCHRONOUS LINK) LINK
Sc18
Sc17
Sc16
RECEIVE VOICE DATA
SEND&RECEIVE VOICE DATA
SEND VOICE DATA
START RECORDING VOICE DATA
Sc19
Sc20
Sc21
Sc22
SEND VOICE DATA
SEND&RECEIVE VOICE DATA
RECEIVE VOICE DATA
Sc23
RELEASE TELEPHONE LINE
Sc24
ESTABLISHMENT OF ACL (ASYNCHRONOUS LINK) LINK
Sc25
Sc26
SEND COMMUNICATION END NOTIFICATION
RECEIVE COMMUNICATION END NOTIFICATION
Sc27
END RECORDING VOICE DATA
Sc28
SHIFT TO PARK MODE

FIG. 19

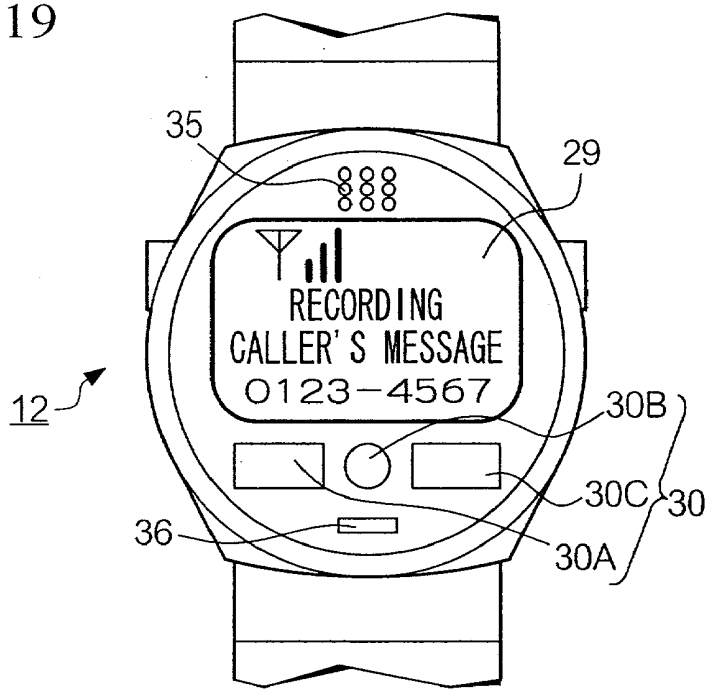
35
29
RECORDING
CALLER'S MESSAGE
0123-4567
12
30B
30C
30
36
30A

FIG. 20

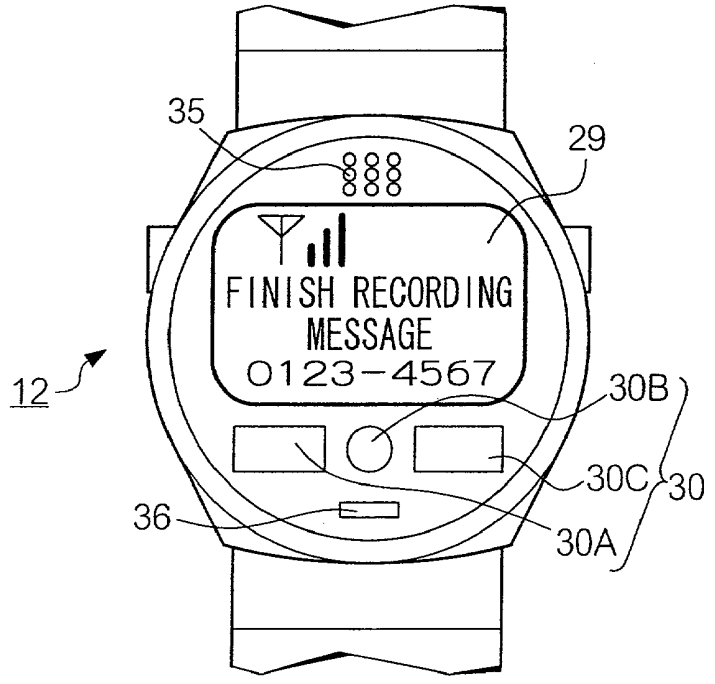
35
29
FINISH RECORDING
MESSAGE
0123-4567
12
30B
30C
30
36
30A

FIG. 21

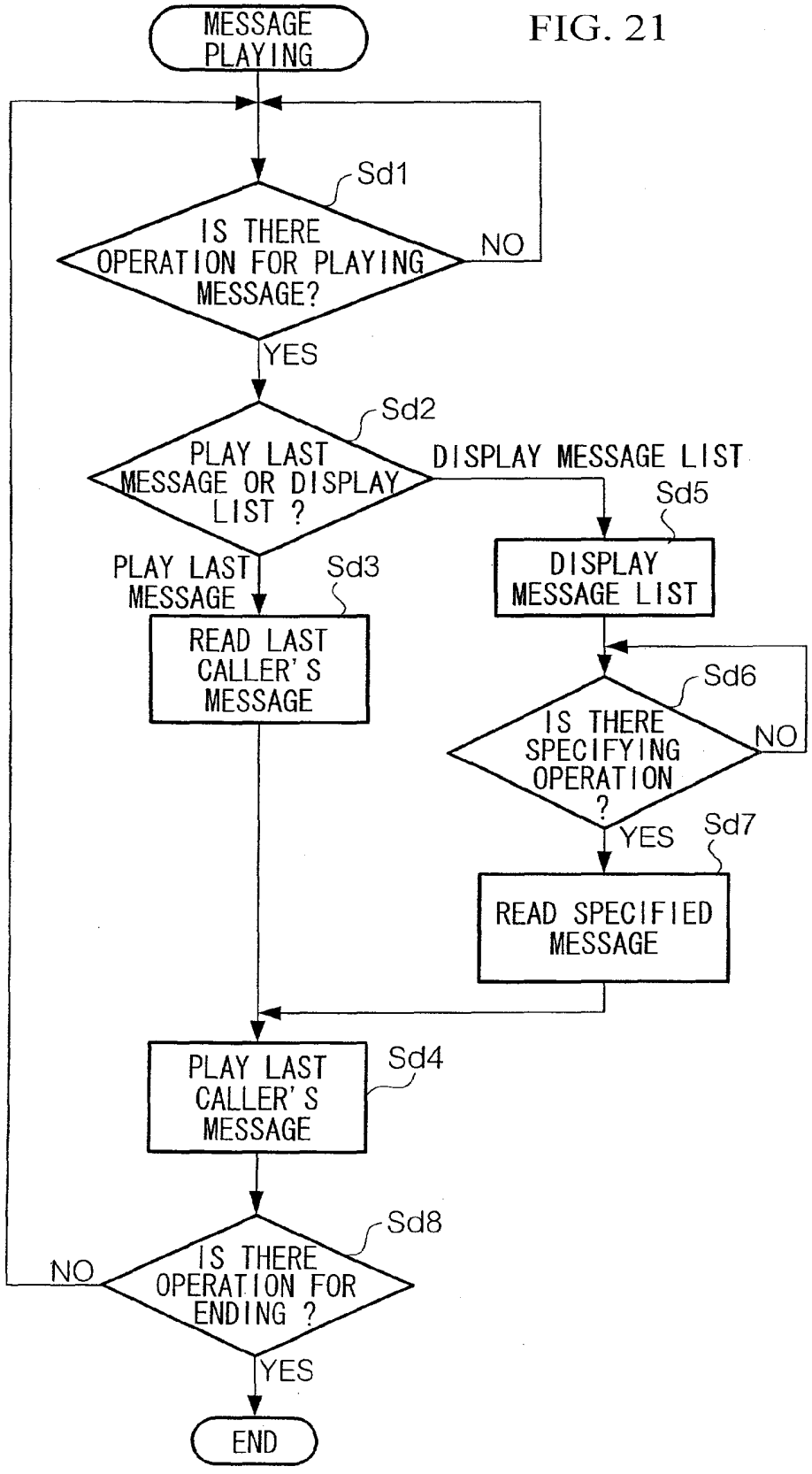
MESSAGE PLAYING
Sd1
IS THERE OPERATION FOR PLAYING MESSAGE?
NO
YES
Sd2
PLAY LAST MESSAGE OR DISPLAY LIST ?
DISPLAY MESSAGE LIST
Sd5
DISPLAY MESSAGE LIST
PLAY LAST MESSAGE
Sd3
READ LAST CALLER'S MESSAGE
Sd6
IS THERE SPECIFYING OPERATION ?
NO
YES
Sd7
READ SPECIFIED MESSAGE
PLAY LAST CALLER'S MESSAGE
Sd4
Sd8
IS THERE OPERATION FOR ENDING ?
NO
YES
END

FIG. 22

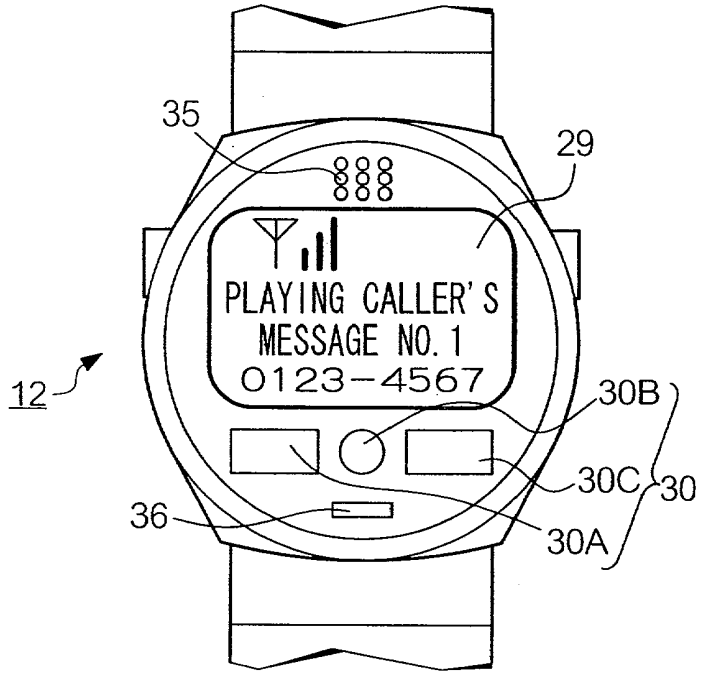
35
29
PLAYING CALLER'S
MESSAGE NO. 1
0123-4567
12
30B
30C
30
36
30A

FIG. 23

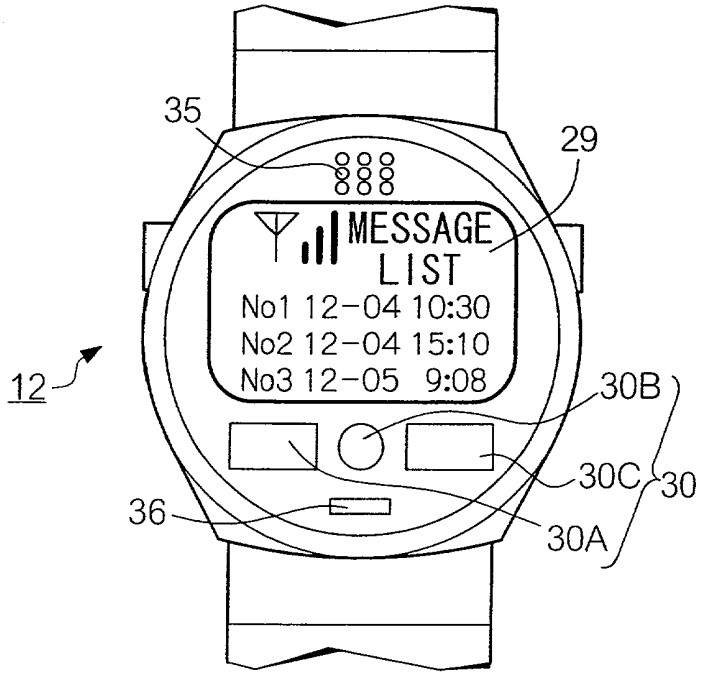
35
29
MESSAGE
LIST
No1 12-04 10:30
No2 12-04 15:10
No3 12-05 9:08
12
30B
30C
30
36
30A

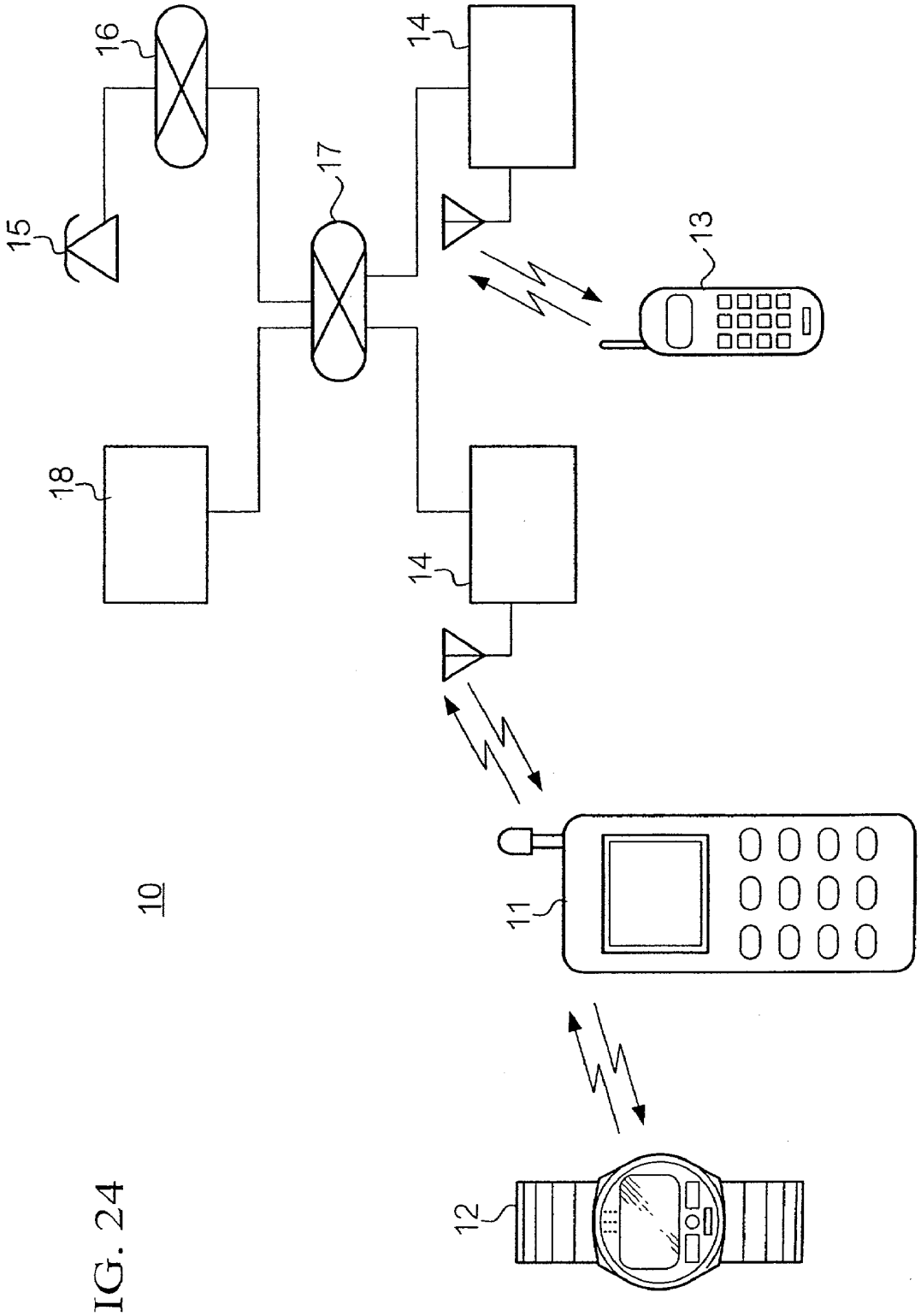

FIG. 24

FIG. 25

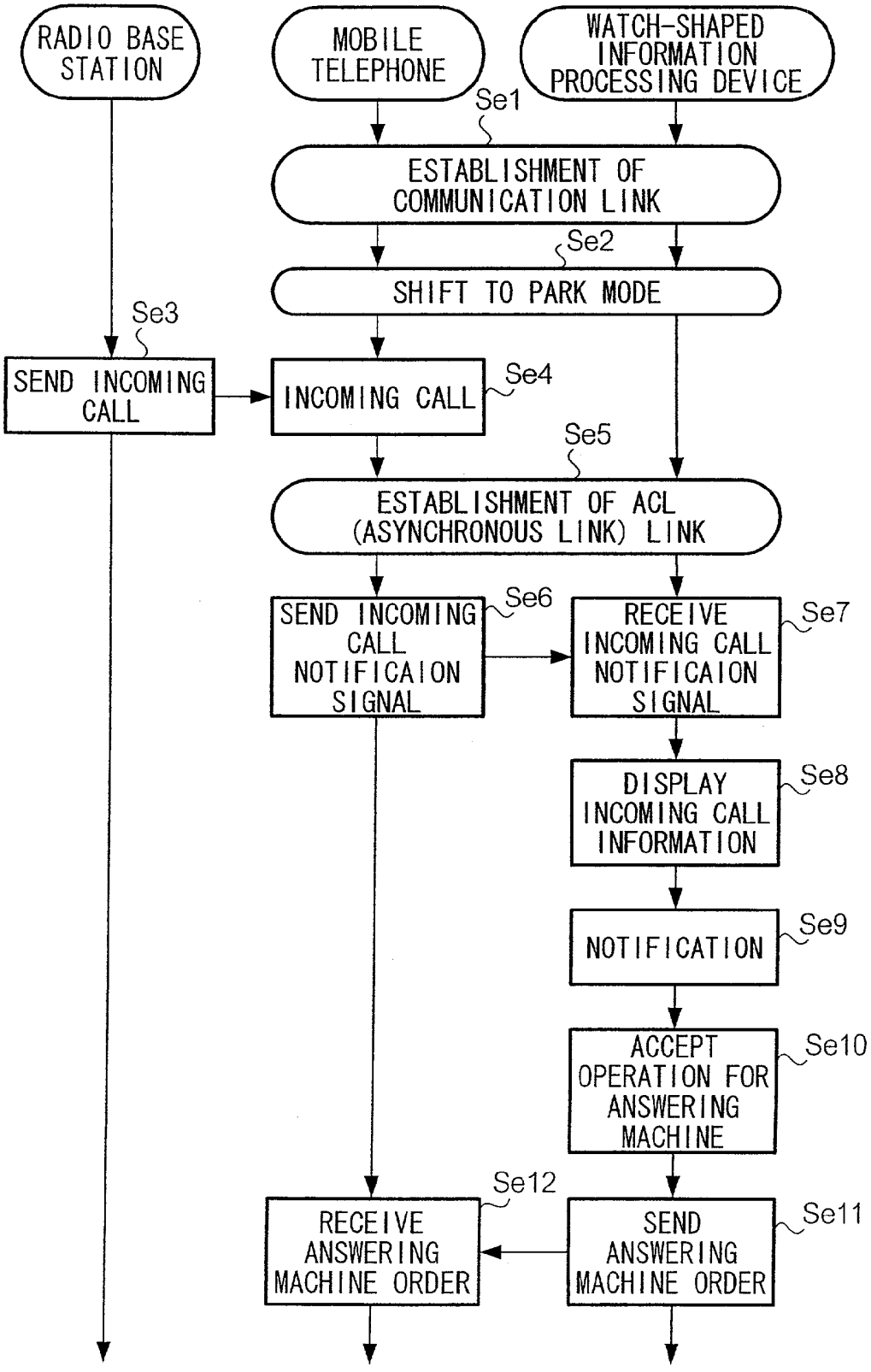
RADIO BASE STATION
MOBILE TELEPHONE
WATCH-SHAPED INFORMATION PROCESSING DEVICE
Se1
ESTABLISHMENT OF COMMUNICATION LINK
Se2
SHIFT TO PARK MODE
Se3
SEND INCOMING CALL
INCOMING CALL
Se4
Se5
ESTABLISHMENT OF ACL (ASYNCHRONOUS LINK) LINK
SEND INCOMING CALL NOTIFICAION SIGNAL
Se6
RECEIVE INCOMING CALL NOTIFICAION SIGNAL
Se7
DISPLAY INCOMING CALL INFORMATION
Se8
NOTIFICATION
Se9
ACCEPT OPERATION FOR ANSWERING MACHINE
Se10
Se12
RECEIVE ANSWERING MACHINE ORDER
SEND ANSWERING MACHINE ORDER
Se11

FIG. 26

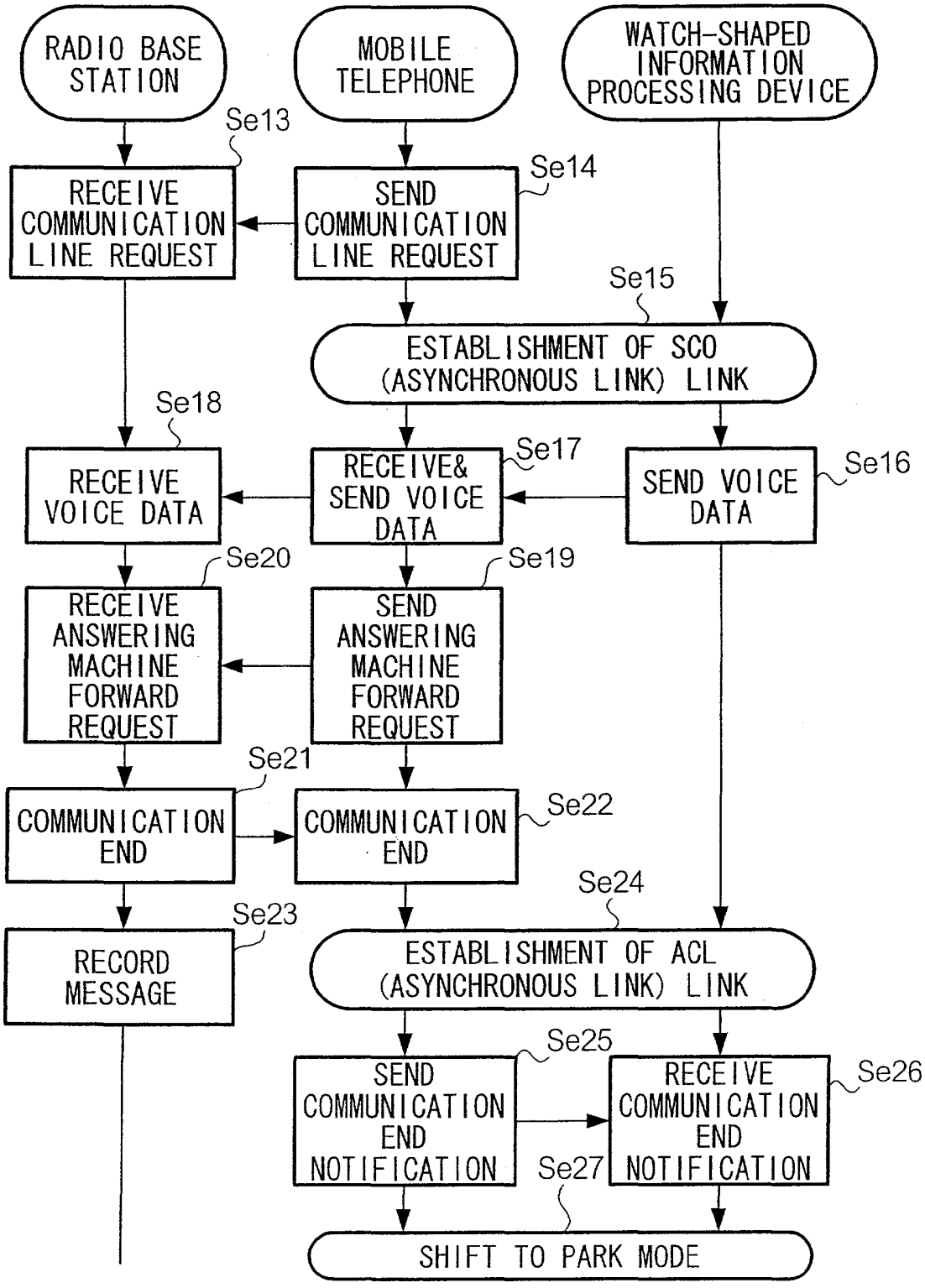
RADIO BASE STATION
MOBILE TELEPHONE
WATCH-SHAPED INFORMATION PROCESSING DEVICE
Se13
RECEIVE COMMUNICATION LINE REQUEST
Se14
SEND COMMUNICATION LINE REQUEST
Se15
ESTABLISHMENT OF SCO (ASYNCHRONOUS LINK) LINK
Se18
RECEIVE VOICE DATA
Se17
RECEIVE& SEND VOICE DATA
Se16
SEND VOICE DATA
Se20
RECEIVE ANSWERING MACHINE FORWARD REQUEST
Se19
SEND ANSWERING MACHINE FORWARD REQUEST
Se21
COMMUNICATION END
Se22
COMMUNICATION END
Se24
Se23
RECORD MESSAGE
ESTABLISHMENT OF ACL (ASYNCHRONOUS LINK) LINK
Se25
SEND COMMUNICATION END NOTIFICATION
Se26
RECEIVE COMMUNICATION END NOTIFICATION
Se27
SHIFT TO PARK MODE

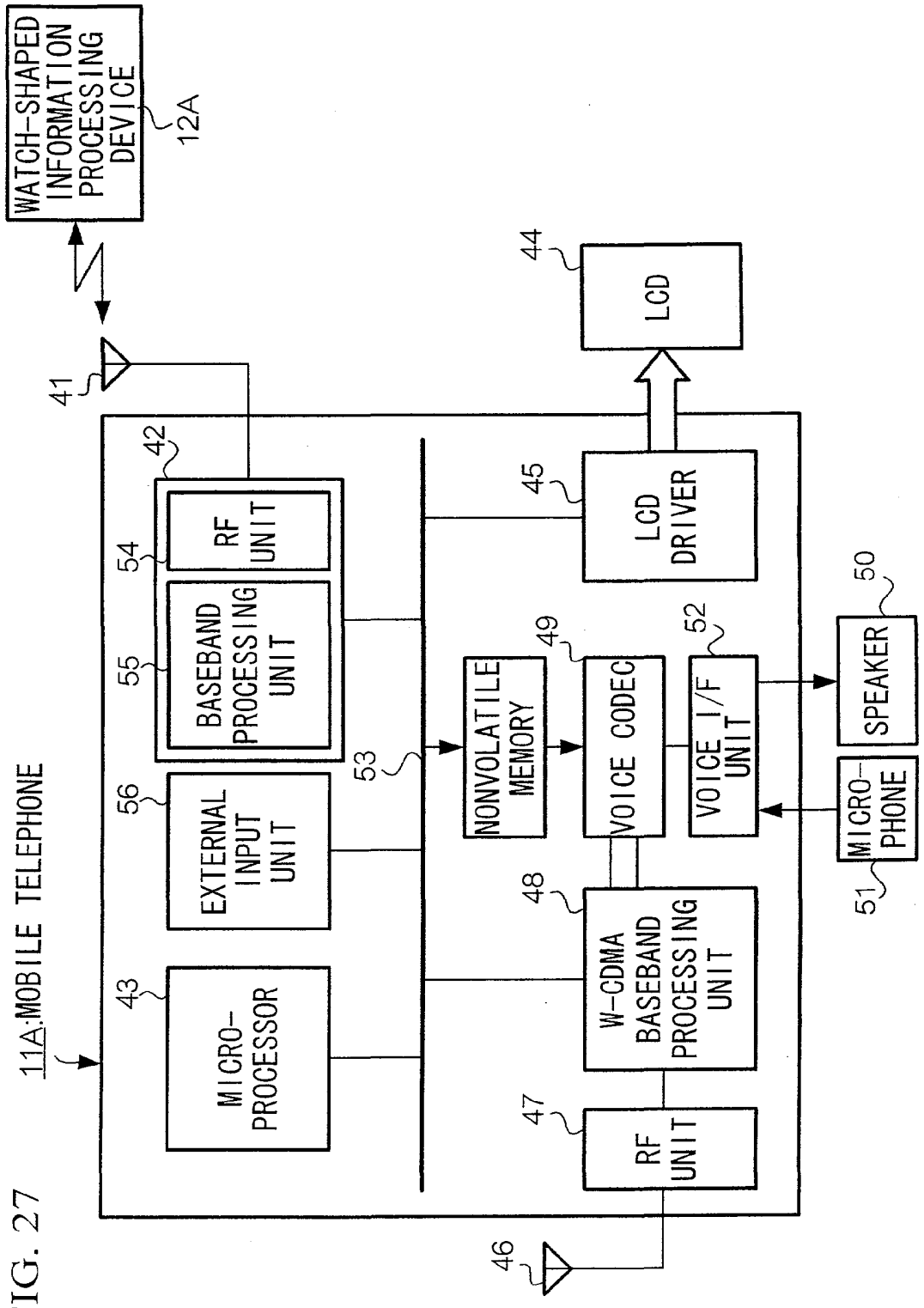
WATCH-SHAPED INFORMATION PROCESSING DEVICE
12A
41
42
RF UNIT
54
BASEBAND PROCESSING UNIT
55
56
EXTERNAL INPUT UNIT
43
MICRO-PROCESSOR
11A:MOBILE TELEPHONE
53
NONVOLATILE MEMORY
49
VOICE CODEC
52
VOICE I/F UNIT
48
W-CDMA BASEBAND PROCESSING UNIT
47
RF UNIT
46
44
LCD
45
LCD DRIVER
50
SPEAKER
MICRO-PHONE
51

FIG. 27

FIG. 28

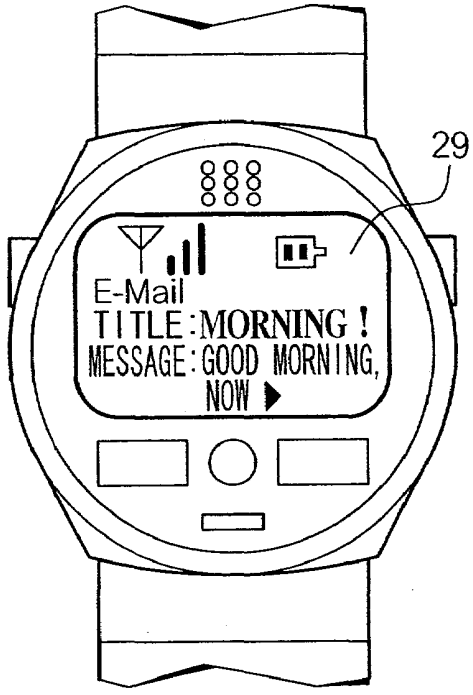
29
E-Mail
TITLE:MORNING !
MESSAGE:GOOD MORNING,
NOW

FIG. 29

29
WELLCOME TO
ABCD WEBSITE
THIS SITE GIVES HELPFU

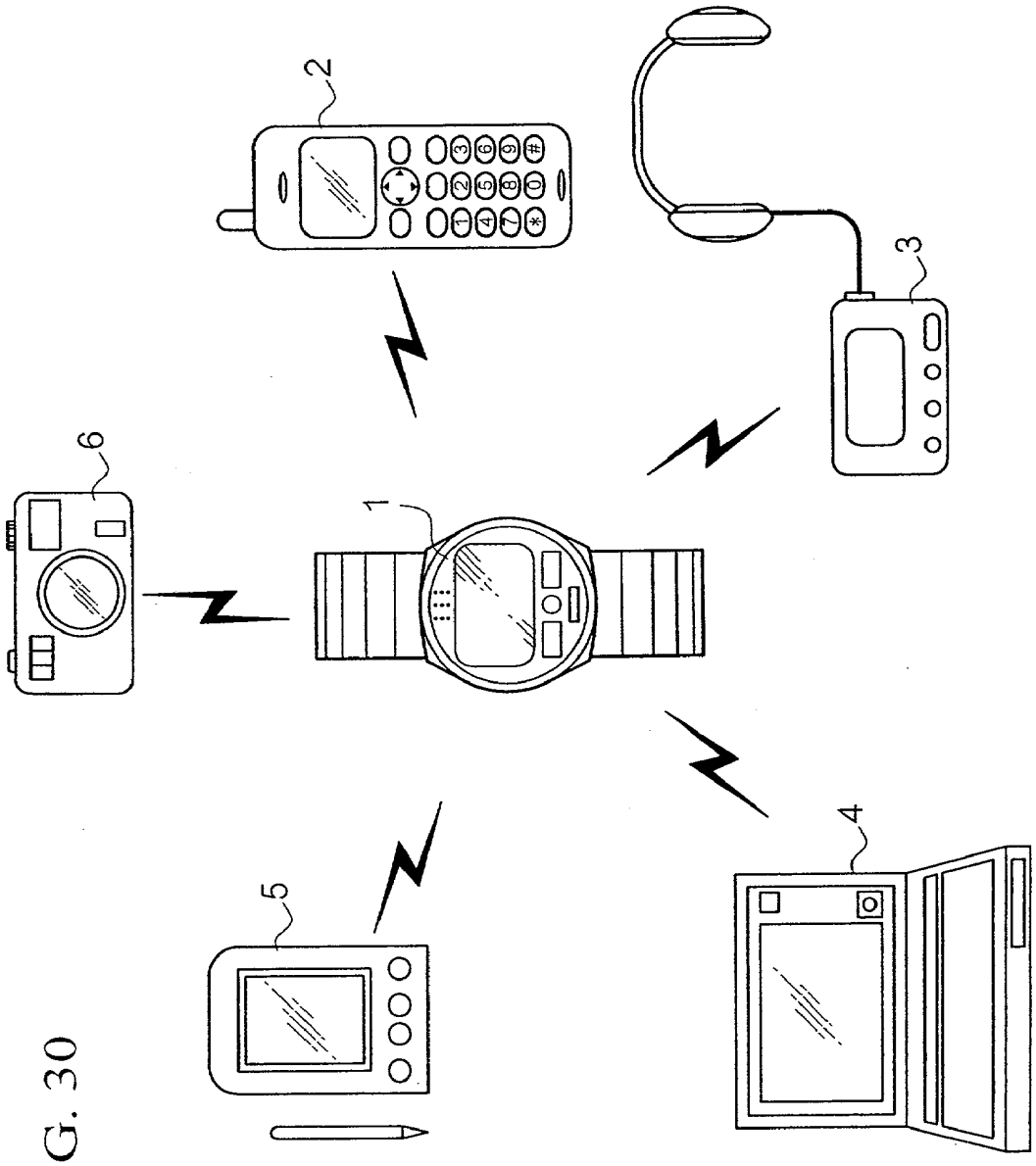

FIG. 30

FIG. 31A

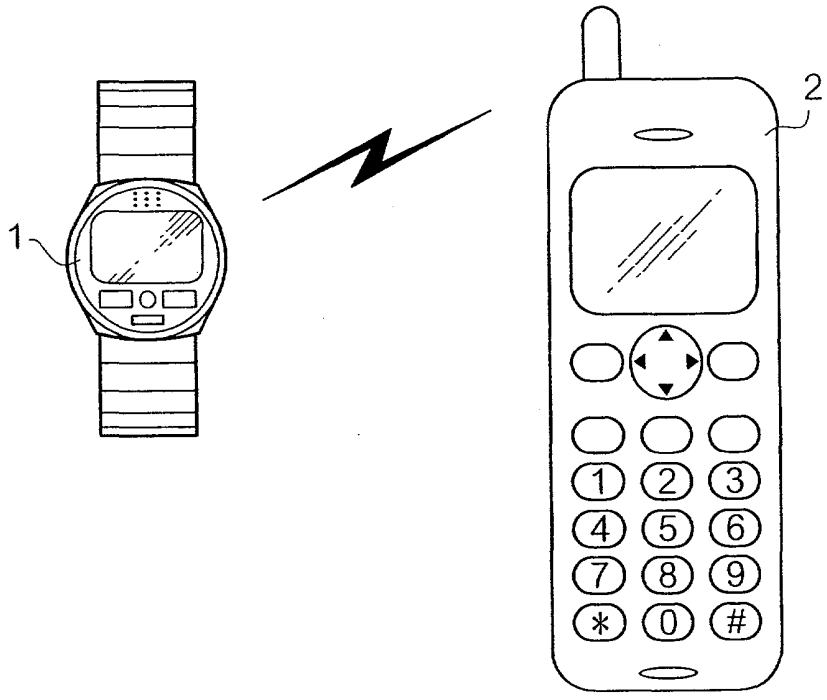

FIG. 31B

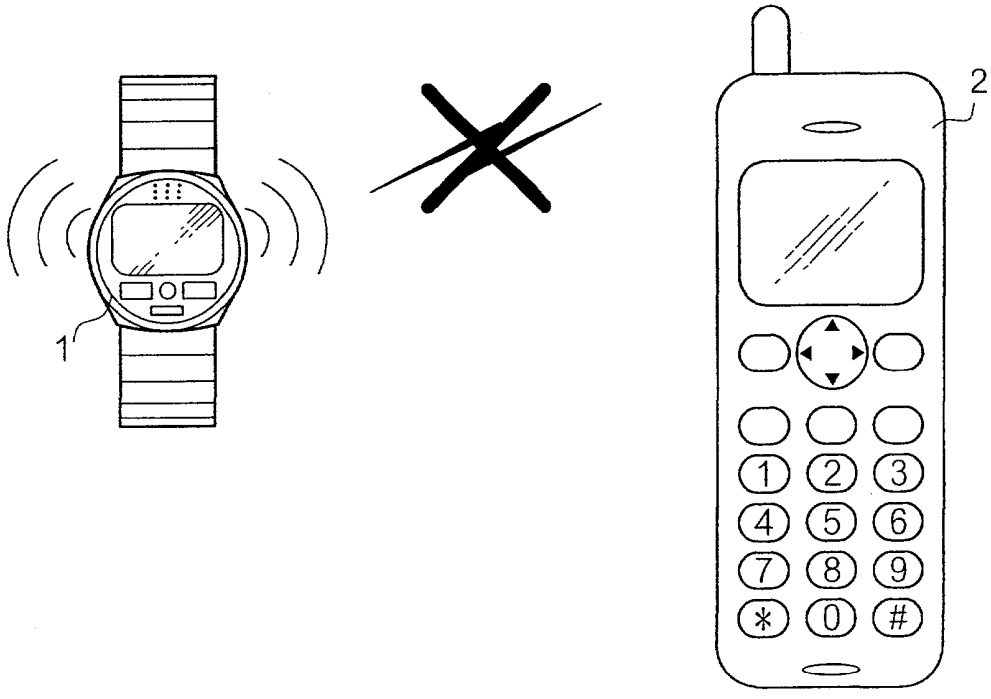

FIG. 32

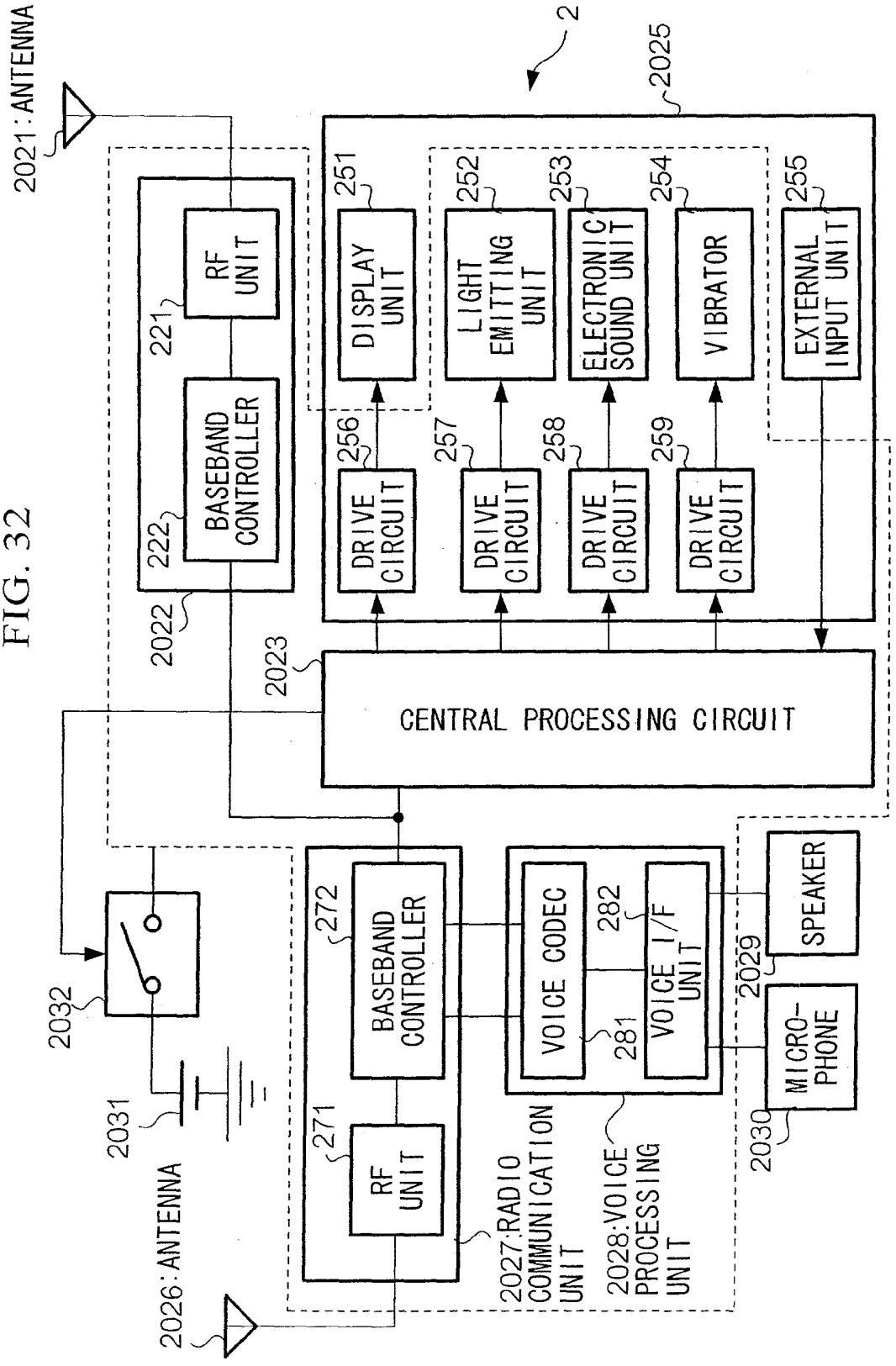
2021: ANTENNA
2
2025
251
DISPLAY UNIT
252
LIGHT EMITTING UNIT
253
ELECTRONIC SOUND UNIT
254
VIBRATOR
255
EXTERNAL INPUT UNIT
221
RF UNIT
222
BASEBAND CONTROLLER
2022
256
DRIVE CIRCUIT
257
DRIVE CIRCUIT
258
DRIVE CIRCUIT
259
DRIVE CIRCUIT
2023
CENTRAL PROCESSING CIRCUIT
2032
2031
2026: ANTENNA
272
BASEBAND CONTROLLER
271
RF UNIT
2027: RADIO COMMUNICATION UNIT
VOICE CODEC
281
282
VOICE I/F UNIT
2028: VOICE PROCESSING UNIT
SPEAKER
2029
MICRO-PHONE
2030

FIG. 33

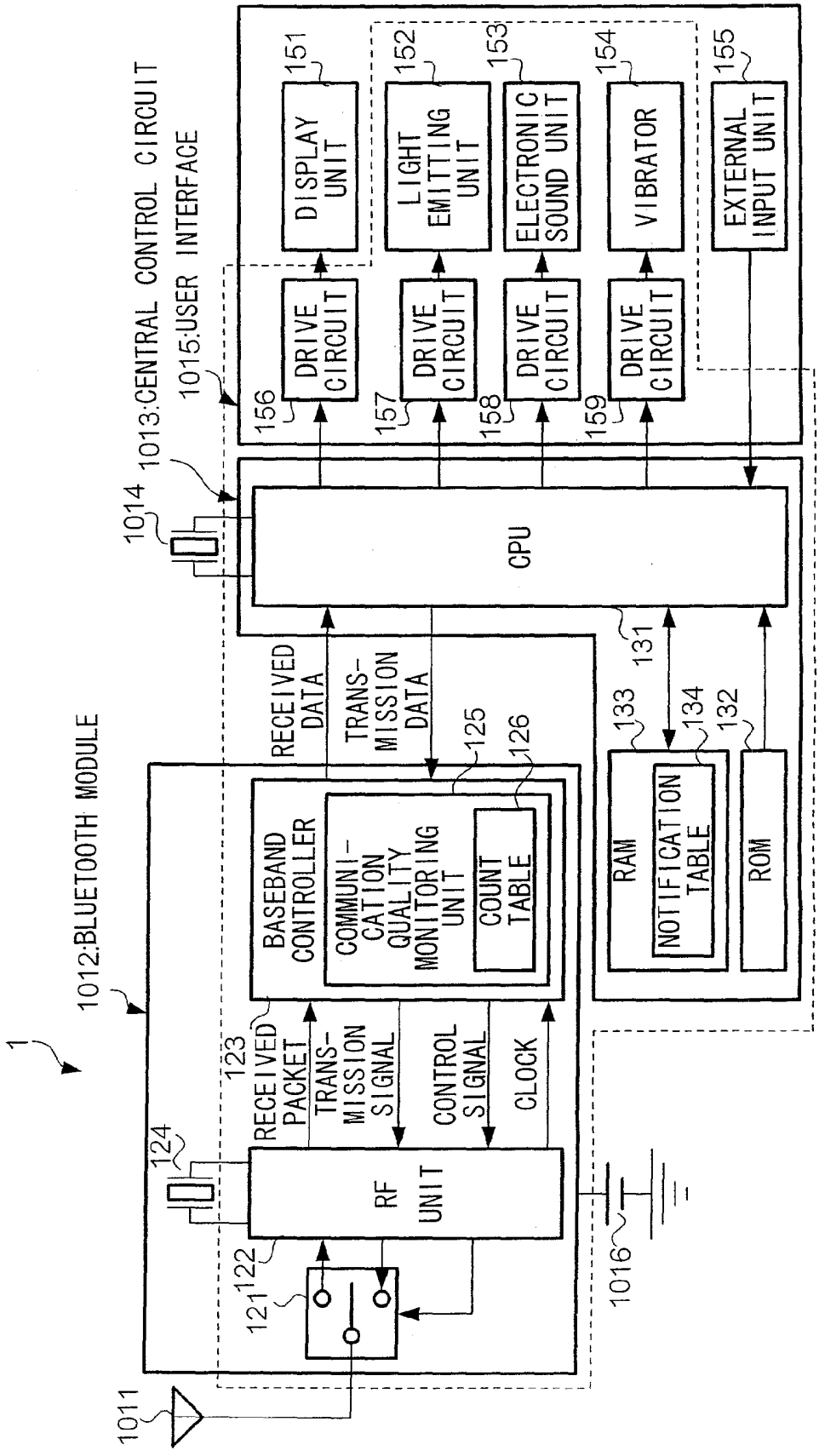
1
1012:BLUETOOTH MODULE
1013:CENTRAL CONTROL CIRCUIT
1015:USER INTERFACE
1014
1011
121
122
124
123
RECEIVED PACKET
TRANS-MISSION SIGNAL
CONTROL SIGNAL
CLOCK
RF UNIT
BASEBAND CONTROLLER
COMMUNI-CATION QUALITY MONITORING UNIT
COUNT TABLE
125
126
RECEIVED DATA
TRANS-MISSION DATA
CPU
131
133
134
132
RAM
NOTIFICATION TABLE
ROM
1016
156
157
158
159
DRIVE CIRCUIT
DRIVE CIRCUIT
DRIVE CIRCUIT
DRIVE CIRCUIT
151
152
153
154
155
DISPLAY UNIT
LIGHT EMITTING UNIT
ELECTRONIC SOUND UNIT
VIBRATOR
EXTERNAL INPUT UNIT

FIG. 34

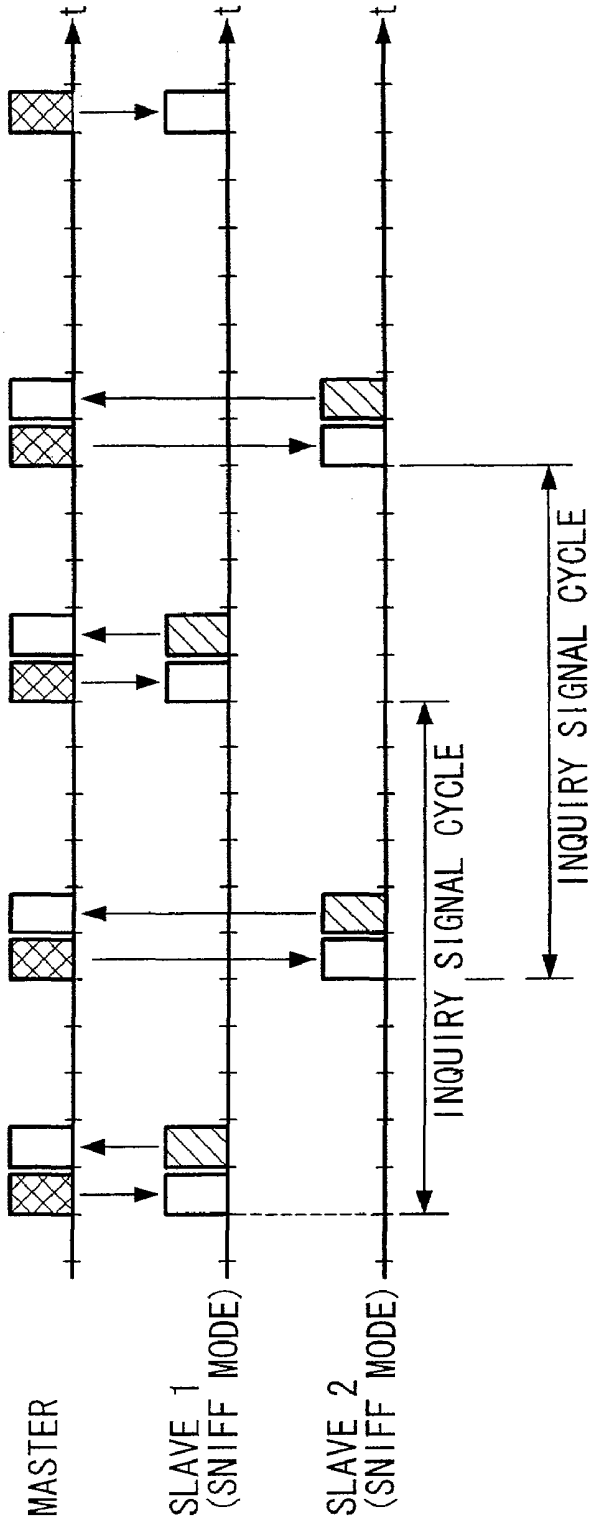
MASTER
SLAVE 1 (SNIFF MODE)
SLAVE 2 (SNIFF MODE)
t
t
t
INQUIRY SIGNAL CYCLE
INQUIRY SIGNAL CYCLE

FIG. 35

126

BLUETOOTH ADDRESS	NUMBER OF FAILURES OF RECEIVING OF INQUIRY RESPONSE SIGNAL
ad0001	0
ad0002	2
ad0003	5
ad0004	0
ad0005	1
ad0006	.....
ad0007	.....

FIG. 37

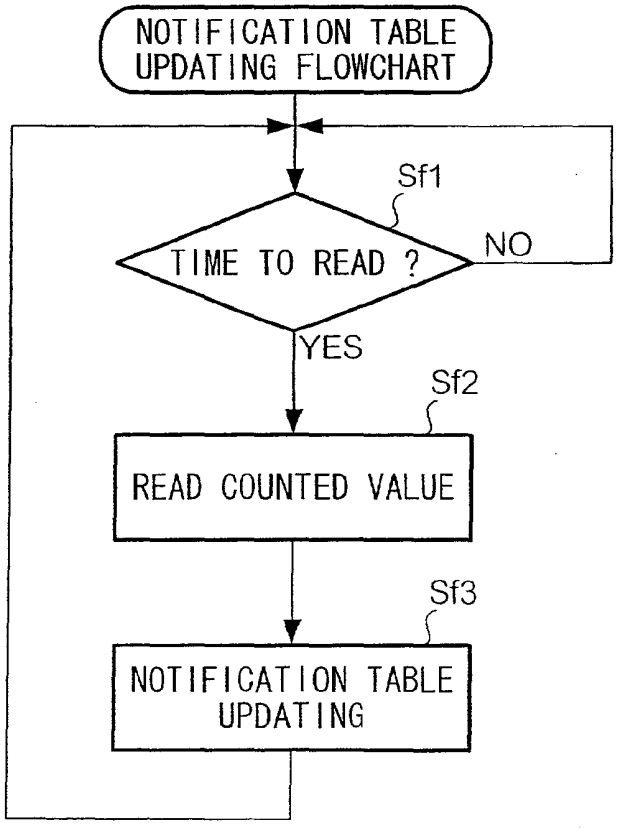

FIG. 36

134

BLUETOOTH ADDRESS	DEVICE NAME	COMMUNICATION QUALITY FLAG			POWER OFF FLAG	NOTIFICATION REQUIREMENT FLAG	
		OK	Caution	NG			
ad0001	NOTEBOOK PC	1	0	0	0	1	
ad0002	PDA	1	0	0	1	1	
ad0003	MOBILE TELEPHONE	0	0	1	0	1	
ad0004	MP3 PLAYER	1	0	0	0	1	
ad0005	DIGITAL CAMERA	1	0	0	0	1	
ad0006	.....	.....	.....	.....	.....	.....	
ad0007	.....	.....	.....	.....	.....	.....	

	NOTIFICATION DEVICE FOR CAUTION				NOTIFICATION DEVICE FOR NG			
	DISPLAY UNIT	LIGHT EMITTING UNIT	ELECTRONIC SOUND UNIT	VIBRATOR	DISPLAY UNIT	LIGHT EMITTING UNIT	ELECTRONIC SOUND UNIT	VIBRATOR
	1	0	0	1	1	1	1	1
	1	0	0	1	1	0	0	1
	1	1	0	0	1	1	1	1
	1	0	0	1	1	0	0	1
	0	1	0	0	1	0	1	1
	.....	.....	.....	.....	.....	.....	.....	.....
	.....	.....	.....	.....	.....	.....	.....	.....

FIG. 38

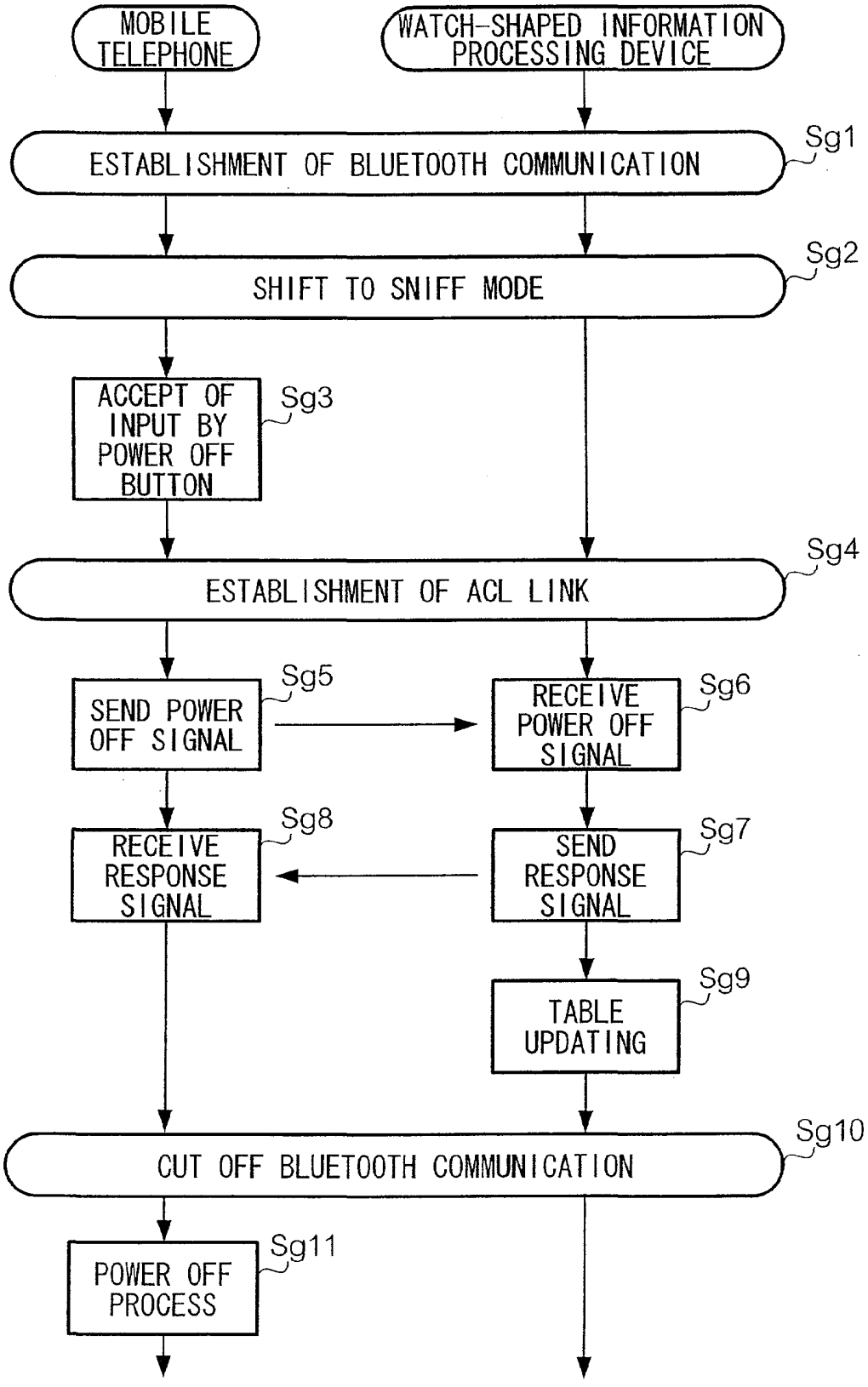
MOBILE TELEPHONE
WATCH-SHAPED INFORMATION PROCESSING DEVICE
ESTABLISHMENT OF BLUETOOTH COMMUNICATION
Sg1
SHIFT TO SNIFF MODE
Sg2
ACCEPT OF INPUT BY POWER OFF BUTTON
Sg3
ESTABLISHMENT OF ACL LINK
Sg4
SEND POWER OFF SIGNAL
Sg5
RECEIVE POWER OFF SIGNAL
Sg6
RECEIVE RESPONSE SIGNAL
Sg8
SEND RESPONSE SIGNAL
Sg7
TABLE UPDATING
Sg9
CUT OFF BLUETOOTH COMMUNICATION
Sg10
POWER OFF PROCESS
Sg11

FIG. 39

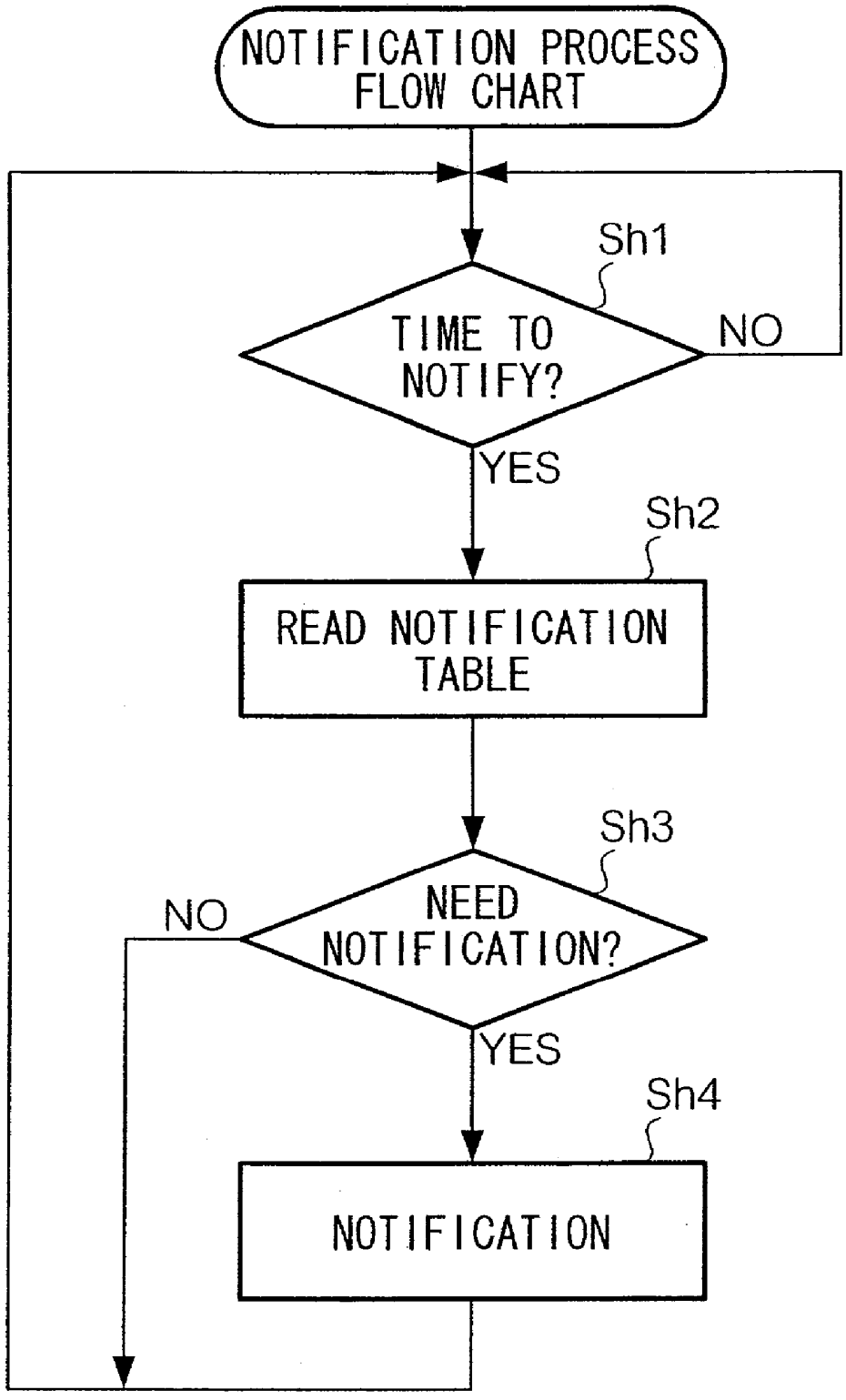
NOTIFICATION PROCESS FLOW CHART
Sh1
TIME TO NOTIFY?
NO
YES
Sh2
READ NOTIFICATION TABLE
Sh3
NEED NOTIFICATION?
NO
YES
Sh4
NOTIFICATION

FIG. 40

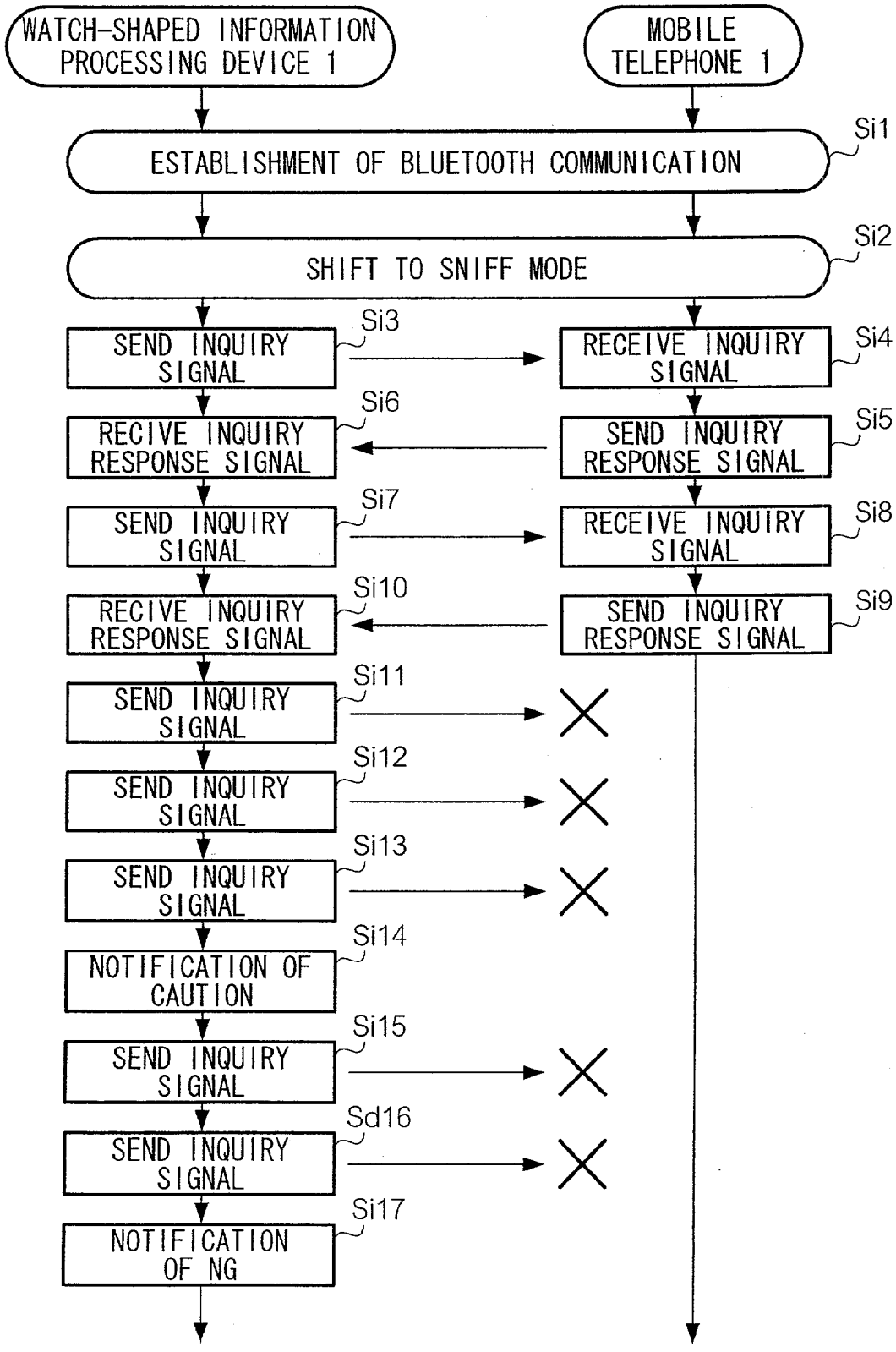
WATCH-SHAPED INFORMATION PROCESSING DEVICE 1
MOBILE TELEPHONE 1
ESTABLISHMENT OF BLUETOOTH COMMUNICATION
Si1
SHIFT TO SNIFF MODE
Si2
SEND INQUIRY SIGNAL
Si3
RECEIVE INQUIRY SIGNAL
Si4
RECIVE INQUIRY RESPONSE SIGNAL
Si6
SEND INQUIRY RESPONSE SIGNAL
Si5
SEND INQUIRY SIGNAL
Si7
RECEIVE INQUIRY SIGNAL
Si8
RECIVE INQUIRY RESPONSE SIGNAL
Si10
SEND INQUIRY RESPONSE SIGNAL
Si9
SEND INQUIRY SIGNAL
Si11
SEND INQUIRY SIGNAL
Si12
SEND INQUIRY SIGNAL
Si13
NOTIFICATION OF CAUTION
Si14
SEND INQUIRY SIGNAL
Si15
SEND INQUIRY SIGNAL
Sd16
NOTIFICATION OF NG
Si17

FIG. 41

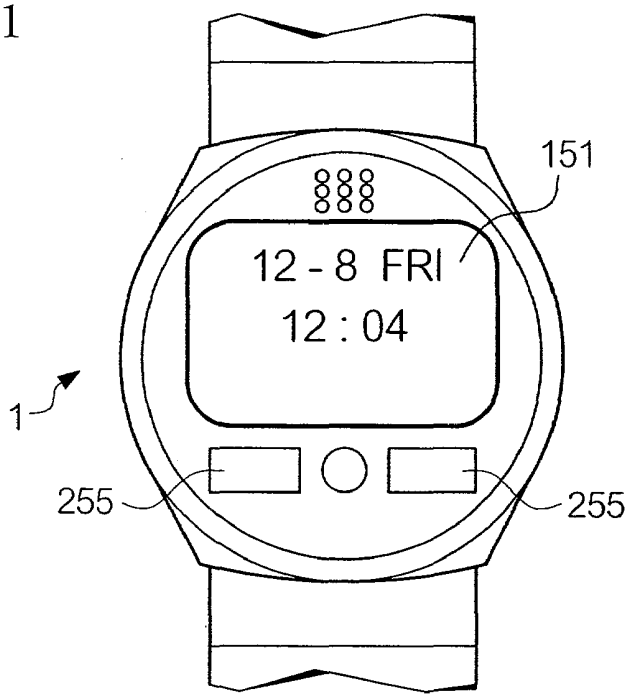
151
12 - 8 FRI
12 : 04
1
255
255

FIG. 42

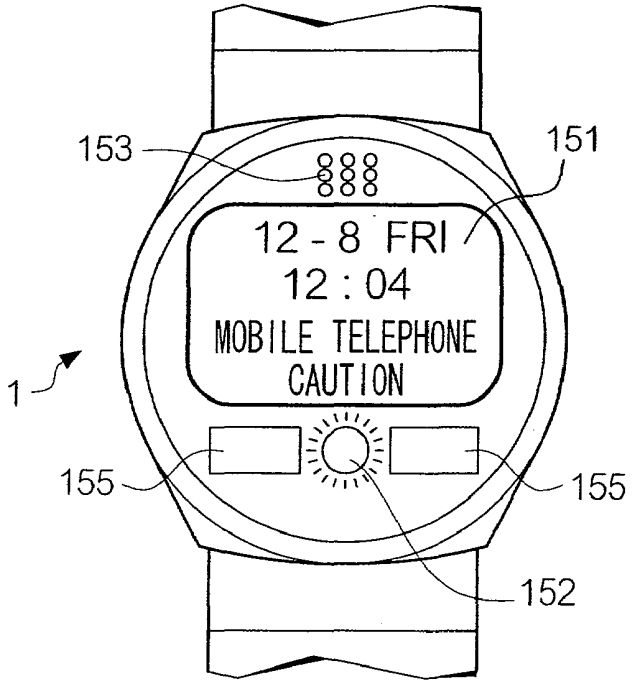
153
151
12 - 8 FRI
12 : 04
MOBILE TELEPHONE
CAUTION
1
155
155
152

FIG. 43

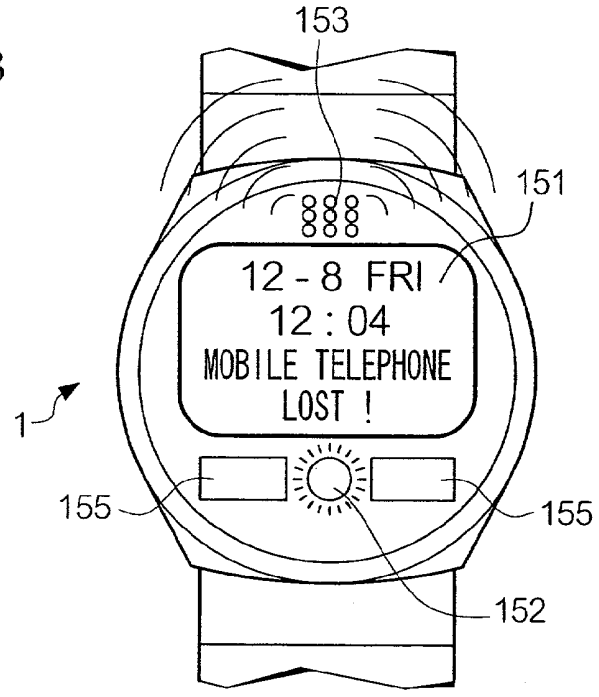
153
151
12 - 8 FRI
12 : 04
MOBILE TELEPHONE
LOST !
1
155
155
152

FIG. 44

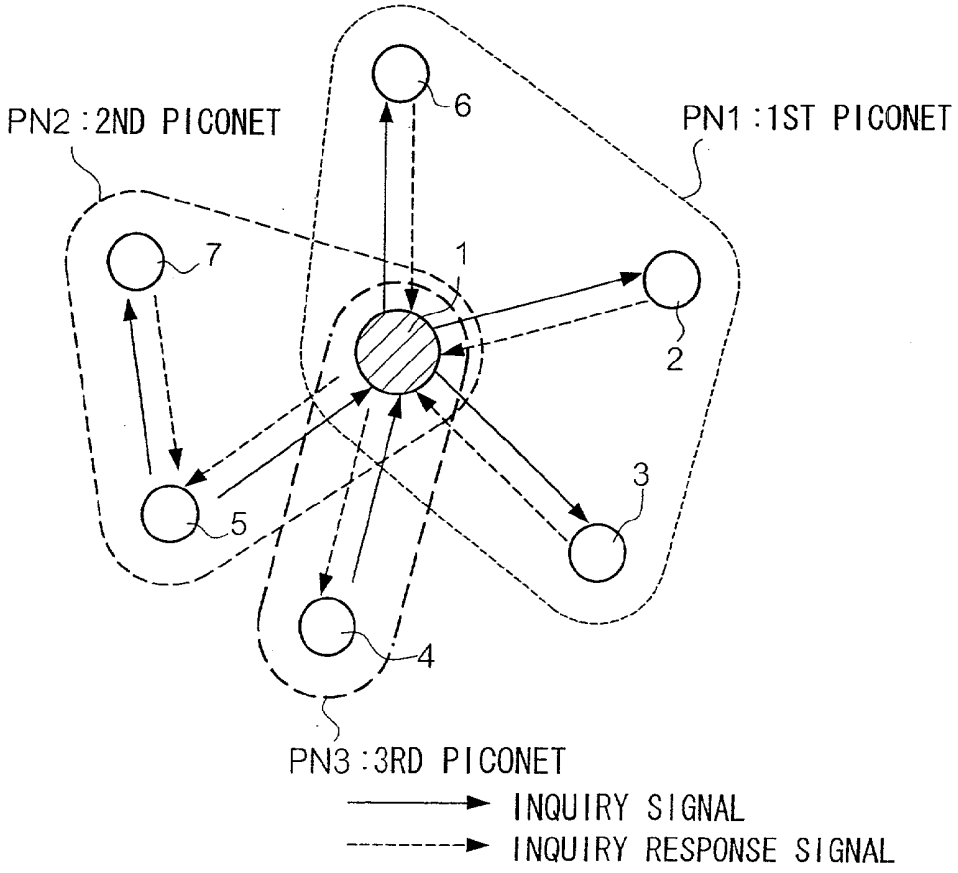
PN2 : 2ND PICONET
PN1 : 1ST PICONET
PN3 : 3RD PICONET
1
2
3
4
5
6
7
INQUIRY SIGNAL
INQUIRY RESPONSE SIGNAL

MOBILE TELEPHONE AND RADIO COMMUNICATION DEVICE COOPERATIVELY PROCESSING INCOMING CALL

TECHNICAL FIELD

[0001] The present invention relates to a mobile telephone and to a radio communication device that can carry out local and bidirectional radio communication with the mobile telephone.

[0002] Recently, small and lightweight mobile telephones are widely used, and they are often put in bags when carried by their users. In that case, users have to take the mobile telephone from the bag to answer the telephone. This takes time, and sometimes the calling can end before answering.

DISCLOSURE OF INVENTION

[0003] An object of the present invention is to allow users of mobile telephones to quickly deal with an incoming call. In order to achieve this objection, the present invention provides a radio communication device and a mobile telephone that, by conducting radio communication with each other, cooperatively process the incoming call.

[0004] The present invention provides a radio communication device comprising: a transmitter-receiver unit that carries out local and bidirectional communication with a mobile telephone; an incoming call notification unit that, when the radio communication device receives from the mobile telephone an incoming call notification signal that indicates that there is an incoming call to the mobile telephone, carries out a notification; and a control unit that, by using the transmitter-receiver unit, sends an instruction signal to the mobile telephone to make the mobile telephone respond to the caller by using voice.

[0005] By this invention, when there is an incoming call, a notification is made by the radio communication device. Therefore, the user of the radio communication device can notice the incoming call even when the device is in the user's bag. The radio communication device also sends to the mobile telephone to make the mobile telephone send an instruction signal to make the mobile telephone respond to the caller by using voice, so the user does not need to operate the mobile telephone to answer the incoming call.

[0006] The radio communication device may have a watch-shape that fits to its user's arm.

[0007] The local and bidirectional communication may be a bluetooth communication.

[0008] The incoming call signal may include an identification signal for identifying radio communication device.

[0009] The incoming call signal may also include a telephone number or a mobile telephone identification information.

[0010] The incoming call signal may include a caller identification signal.

[0011] As an incoming call notification unit, an incoming call notification vibration unit may be possible. In this case, when the incoming call notification signal specifies to use a vibration to conduct an incoming call notification, the incoming call notification vibration unit is used to conduct an incoming call notification.

[0012] The radio communication device may be equipped with a time display unit for displaying time.

[0013] The control unit may establish synchronization of transmission-receiving operation by making intermittently communication with the mobile telephone by using the transmitter-receiver unit.

[0014] The radio communication device may be equipped with a signal strength indicator that tells signal strength of received signal from the mobile telephone.

[0015] In one preferred aspect of the present invention, the radio communication device further has an external input unit and the control unit, in response to an operation to the external input unit, sends an instruction signal to the mobile telephone to make the mobile telephone conduct operations for the incoming call.

[0016] In another preferred aspect of the present invention, the radio communication device further has an external input unit and the control unit, when a prescribed time period has passed without any operation to the external input terminal after the notification of the incoming call is carried out, sends an instruction signal to the mobile telephone the mobile telephone to make the mobile telephone conduct operations for the incoming call.

[0017] In another preferred aspect of the present invention, the control unit of the radio communication device, when an incoming call auto-response mode is preset to the radio communication device and the radio communication device receives the incoming call notification signal, sends an instruction signal to the mobile telephone to make the mobile telephone conduct operations for the incoming call.

[0018] In yet another preferred aspect of the present invention, the radio communication device further has a display. And the control unit, when there is a telephone number, a mobile telephone identification information, or a caller identification signal of the mobile telephone in the incoming call notification signal received by the mobile telephone, displays them on the display.

[0019] In this case, the control unit, by using the transmitter-receiver unit, may send to the mobile telephone, as the instruction signal, a signal that instructs the mobile telephone to send to the caller a message that asks the caller to wait for a moment.

[0020] Or the control unit, by using the transmitter-receiver unit, may send to the mobile telephone, as the instruction signal, a signal that instructs the mobile telephone to send to the caller a message that asks the caller to leave a message.

[0021] Or the control unit may, by using the transmitter-receiver unit, sends to the mobile telephone, as the instruction signal, a signal that instructs the mobile telephone to make a communication link between the radio communication device and the caller's communication device via the mobile telephone.

[0022] The present invention also provide a radio communication device, which is equipped with: a transmitter-receiver unit that carries out local and bidirectional communication with a mobile telephone; an incoming call notification unit that carries out a notification when the radio communication device receives from the mobile telephone

an incoming call notification signal that indicates that there is an incoming call to the mobile telephone; and a control unit that sends, by using the transmitter-receiver unit, to the mobile telephone a message to be sent to a caller's communication device from the mobile.

[0023] The present invention also provide a radio communication device, which is equipped with: a transmitter-receiver unit that carries out local and bidirectional communication with a mobile telephone; an incoming call notification unit that carries out a notification when the radio communication device receives from the mobile telephone an incoming call notification signal that indicates that there is an incoming call to the mobile telephone; and a control unit that sends, by using the transmitter-receiver unit, to the mobile telephone a message to be sent to a caller's communication device from the mobile telephone and an instruction signal that instruct the mobile telephone to conduct operations for the incoming call.

[0024] In this case, the radio communication device may further include a storage unit that stores a message to be sent to a caller's communication device, and the control unit may, during the information exchange, sends the stored message to the mobile telephone.

[0025] Also, the radio communication device may further include an input unit that receives the message to be sent to a caller's communication device, and then the control unit may store in the storage unit the message that is input by using the input unit.

[0026] The input unit may be a microphone, and the message to be sent to a caller's communication device may be input by using this microphone.

[0027] The message may be a message that tells the caller to wait for a moment, or may be a message that tells the caller to leave a message.

[0028] The radio communication device may be further equipped with a storage unit that, after sending the message when a caller-sent information is received through the mobile telephone, stores the caller-sent information.

[0029] The caller-sent information may be a message the caller sends.

[0030] The radio communication device may be further equipped with an output unit that outputs the caller-sent information that is stored in the storage unit.

[0031] The output unit may be a voice output unit that outputs voice after reading the caller's message from the storage unit.

[0032] The outputting of voice may be carried out when a certain operation is made on the radio communication device.

[0033] The radio communication device may be further equipped with an external input unit and a display unit. The storage unit of the radio communication device may store messages and their information received via the mobile telephone. The control unit of the radio communication device, in response to operation to the external input unit, displays information of the messages. Then again, in response to operation to the external input unit to specify a message, the control unit of the radio communication device reads the specified message from the storage unit to output to the display unit.

[0034] In a preferred aspect, the control unit, after sending to the mobile telephone the message to be sent to the caller, as the instruction signal, sends to the mobile telephone a record instruction that instructs the mobile telephone to record information sent from the caller's communication device in response to the message to be sent to the caller.

[0035] In another aspect of the present invention, the control unit, after sending to the mobile telephone the message to be sent to the caller, as the instruction signal, sends to the mobile telephone a change order that instructs the mobile telephone to let another device on a network as a substitute of the mobile telephone carry out a communication with the communication device of the caller.

[0036] In this case, message to be sent to the caller is for example a message that asks the caller to leave a message. The change order is an instruction that lets an external message storage device receive and store message sent from the caller.

[0037] In yet another preferable aspect of the present invention, the radio communication device is further equipped with an operating mode synchronization unit that conducts intermittently communication with the mobile telephone and, when the operating mode of the mobile telephone shifts, shifts the operating mode of the radio communication device to the operating mode of the mobile telephone.

[0038] The present invention also provides a radio communication device that has a transmitter-receiver unit that carries out local and bidirectional communication with a mobile telephone; an incoming call notification unit that, when the radio communication device receives from the mobile telephone an incoming call notification signal that indicates that there is an incoming call to the mobile telephone, carries out a notification; and a control unit that, by using the transmitter-receiver unit, sends, in response to the incoming call, a change order that instructs the mobile telephone to let another device on a network as a substitute of the mobile telephone carry out a communication with the communication device of the caller.

[0039] The change order in this case may be a signal that lets another server on a network receive and store a message that is sent from the caller.

[0040] The present invention provide a mobile telephone that has a transmitter-receiver unit that carries out local and bidirectional communication with a radio communication device; and a control unit that, after receiving an incoming call from a network, sends an incoming call notification signal to the radio communication device; and, based on instruction signal received from the radio communication device by the transmitter-receiver unit, responds to the caller by using voice.

[0041] The incoming call notification signal may include a telephone number of the mobile telephone or a mobile telephone identification information that corresponds to the telephone number, or may include a caller's identification number.

[0042] The control unit may establish a synchronization with a radio communication device by making an intermittently communication with a transmitter-receiver unit.

[0043] In a preferable aspect of the present invention, an incoming call notification unit is provided. And the control unit, when there is an incoming call to the mobile telephone, sends the incoming call notification signal in a case when there is a communication link between the mobile telephone and the radio communication device and carries out notification by using the incoming call notification unit in a case when there is a communication link between the mobile telephone and the radio communication device.

[0044] Also, during the processing for the incoming call, the control unit sends a connection request to a network, makes a communication link between the mobile telephone and the caller's communication device, and sends to the caller's communication device a message for the caller via the communication link.

[0045] The control unit may, during the processing for the incoming call, sends to the radio communication device, by the transmitter-receiver unit, information about the caller sent in response to the message to be sent to the caller.

[0046] In another aspect of the present invention, a mobile telephone further has a storage unit. And the control unit stores information sent by the caller received via the network after sending message to be sent to the caller.

[0047] In this case, when the control unit receives an instruction signal that asks for receiving and storing a message, the control unit sends to a caller's communication device a message that asks for sending message, and stores the message in a storage unit.

[0048] The mobile telephone may also be equipped with a voice outputting unit that outputs sound of the stored message in the storage unit.

[0049] The present invention provide a mobile telephone that has a transmitter-receiver unit that carries out local and bidirectional communication with a radio communication device; and a control unit that, after receiving an incoming call from a network, sends an incoming call notification signal to the radio communication device, and forwards a message that is received, device by the transmitter-receiver unit, from the radio communication device to the caller.

[0050] In a preferred aspect of the present invention, a mobile telephone intermittently conducts a communication with the radio communication device and, when the operating mode of the mobile telephone is shifted, sends to the radio communication device an operating mode shifting information that tells the operating mode of the mobile telephone after shifting.

[0051] In another aspect of the present invention, a mobile telephone has a transmitter-receiver unit that can carry out local and bidirectional communication with a radio communication device; and a control unit that, when the mobile telephone receives an incoming call, sends to the radio communication device an incoming call signal by using the transmitter-receiver unit, and when the mobile telephone receives a change order by using the transmitter-receiver unit, request to the network to change the connection from between the mobile telephone and the caller's device to between a device on the network and the caller's device.

[0052] A method provided by this invention for controlling a radio communication device with a transmitter-receiver unit that carries out local and bidirectional communication with a mobile telephone carrys out a notification when the transmitter-receiver unit receives an incoming call notification signal that indicates that there is an incoming call to the mobile telephone; and sends, by using the transmitter-receiver unit, an instruction signal that makes the mobile telephone respond to the caller by using voice in response to the incoming call.

[0053] Also a control method is provided for a radio communication device with a transmitter-receiver unit that is able to carry out local and bidirectional radio communication with a mobile telephone, the method comprising: notifying, when the transmitter-receiver unit receives an incoming call signal, of incoming signal by using a notification unit; and sending a message to be sent to the caller and an instruction signal that makes the mobile telephone respond to the caller by using the message.

[0054] Also there is provided a control method for answering an incoming call to a mobile telephone in a system with the mobile telephone that can cary out local and bidirectional communication with a radio communication device, the method comprising: transmitting an incoming call notification signal by the mobile telephone to the radio communication device when the mobile telephone receives an incoming call; receiving the incoming call notification signal by the radio communication device; notifying the incoming call by the radio communication device; and sending an instruction signal that make the mobile telephone respond to the caller by using voice.

[0055] Further, there is provided a control method for answering an incoming call to a mobile telephone in a system with the mobile telephone that can carry out local and bidirectional communication with a radio communication device, the method comprising: transmitting an incoming call notification signal by the mobile telephone to the radio communication device when the mobile telephone receives an incoming call; receiving the incoming call notification signal by the radio communication device; notifying the incoming call by the radio communication device; and sending a message to be sent to the caller and an instruction signal that makes the mobile telephone respond to the caller by using the message.

[0056] Yet another program is provided for controlling a radio communication device that can carry out local and bidirectional radio communication with a mobile telephone, the program comprising: a program that makes a control unit of the radio communication device conduct controlling for an incoming call notification when a transmitter-receiver unit of the radio communication device receives an incoming call notification signal that tells the mobile telephone receives an incoming call; and a program that makes a control unit of the radio communication device send an instruction signal that makes the mobile telephone respond to the caller by using voice.

[0057] A program is also provided for controlling a radio communication device that is able to carry out local and bidirectional radio communication with a mobile telephone, the program comprising: a program that makes a control unit of the radio communication device conduct controlling for an incoming call when a transmitter-receiver unit of the

radio communication device receives an incoming call notification signal that indicates that the mobile telephone receives an incoming call; and a program that makes the control unit of the radio communication device send an instruction signal that makes the mobile telephone send a message to be sent to the caller and respond to the caller by using the message.

[0058] A control method is also provided for a mobile telephone that can carry out local and bidirectional radio communication with a radio communication device, the method comprising: making a control unit of the mobile telephone conduct controlling to send to the radio communication device an incoming call notification signal when the mobile telephone receives an incoming call; and making a control unit of the mobile telephone respond to the caller by using voice based on the instruction signal received from the radio communication device.

[0059] A control method is also provided for a mobile telephone that can carry out local and bidirectional communication with a radio communication device, the method comprising: making, when the mobile telephone receives an incoming call, a control unit of the mobile telephone send an incoming call notification signal to the radio communication device; and making, when the mobile telephone receives a message to be sent to the caller and an instruction signal that instructs the mobile telephone to forward the message, the control unit of the mobile telephone conduct processing for forwarding the message.

[0060] There is also provided a program for controlling a mobile telephone that can carry out local and bidirectional radio communication with a radio communication device, the program comprising: a program that makes a control unit of the mobile telephone conduct controlling to send to the radio communication device an incoming call notification signal when the mobile telephone receives an incoming call; and a program that makes a control unit of the mobile telephone respond to the caller by using voice based on the instruction signal received from the radio communication device.

[0061] Further a control program is provided for a mobile telephone that can carry out local and bidirectional communication with a radio communication device, the program comprising: a program that, when the mobile telephone receives an incoming call, makes a control unit of the mobile telephone send an incoming call notification signal to the radio communication device; and a program that, when the mobile telephone receives a message to be sent to the caller and an instruction signal that instructs the mobile telephone to forward the message, makes the control unit of the mobile telephone conduct processing for forwarding the message.

[0062] A computer readable storage media is provided that stores a control program for a mobile telephone which can carry out local and bidirectional radio communication with a radio communication device, the control program comprising: a program that, when the mobile telephone receives an incoming call, makes a control unit of the mobile telephone conduct a processing for sending an incoming call notification signal; and a program that, based on an instruction signal sent by the radio communication device, makes the control unit of the mobile telephone conduct processing for responding for the incoming call and for responding to the caller by using voice.

[0063] Also there is provided a computer readable storage media that stores a control program for a mobile telephone which can carry out local and bidirectional radio communication with a radio communication device, the control program comprising: a program that, when the mobile telephone receives an incoming call, makes a control unit of the mobile telephone conduct a processing for sending an incoming call notification signal; and a program that, when the mobile telephone receives from the radio communication device a message to be sent to the caller and an instruction signal that instructs to forward the message, makes the control unit of the mobile telephone conduct processing for responding to the incoming call and for forwarding the message to be sent to the caller.

[0064] A radio communication device is provided by the present invention that has a transmitter-receiver unit that carries out local and bidirectional communication with another radio communication device; a communication state judgement unit that measures and makes a judgement of state of the bidirectional communication; and a notification unit that tells information about the state of the bidirectional communication measured by the communication state judgement unit.

[0065] This radio communication device may further be equipped with a notification requirement judgement unit that, based on the judgement of the state done by the communication state judgement unit, makes a judgement whether or not to tell a user of the radio communication device information about the state of the bidirectional communication; wherein the notification unit, when the notification requirement judgement unit judges the user should be notified, sends information about the state of communication.

[0066] By this configuration, because state of bidirectional communication with another radio communication device is judged, and also judgement is made whether or not to sends information about the bidirectional communication, and when judgement is made to send information to the user, the user gets information about communication state. Therefore, the user can know the state of the communication.

[0067] In this case, when the communication state judgement unit makes a judgement that communication state has declined or communication is impossible, the notification requirement judgement unit may judge that it is necessary to notify the user of information.

[0068] Also, the notification unit can make various notification operations. And the radio communication device may be equipped with a notification judgement unit that makes a judgement about which notification operation should be used, when the notification requirement judgement unit makes a judgement to make a notification. Then the notification unit may conduct notification operation specified by the notification judgement unit.

[0069] There are a plurality of the above radio communication devices. The communication state judgement unit judges state of bidirectional radio communication conducted between each of the radio communication device, and the notification requirement judgement unit, based on the communication state judged by the communication state judgement unit, judges whether or not to notify its user of information about communication with each radio commu-

nication device. The notification judgement unit may make a judgement to each bidirectional radio communication.

[0070] Also, the state of the communication may be divided into several steps. So the communication state judgement unit makes a judgement on which steps the communication is in. Based on this judgement, the notification requirement judgement unit makes a judgement whether or not to notify the user of information about the radio communication. Then the notification judgement unit makes a judgement about notification operation to be used.

[0071] Also the notification unit may be equipped with at least two of among a display that makes notification operation by displaying, an electronic sound unit that makes notification operation by outputting electronic sound, a light emitting unit that makes notification operation by blinking, and a vibrator that makes a notification operation by vibrating. Then the notification judgement unit makes a judgement which unit to use for notification.

[0072] Or the notification unit may be equipped with at least one of among a display that makes notification operation by displaying, an electronic sound unit that makes notification operation by outputting electronic sound, a light emitting unit that makes notification operation by blinking, and a vibrator that makes a notification operation by vibrating. Then the notification judgement unit makes a judgement which unit to use for notification.

[0073] Also, the mobile telephone may be equipped with a power-off detection unit that detects if the radio communication device is powered off. The notification requirement judgement unit does not make notification about the bidirectional communication with the radio communication device that is powered off.

[0074] Also, notification unnecessary storage unit may be provided that pre-stores identification information of the radio communication device, notification of which is not necessary. The notification requirement judgement unit does not make notification about bidirectional communication with the radio communication device whose identification information is stored in the notification unnecessary storage unit.

[0075] The notification requirement judgement unit may make a judgement based on condition of received signal that is received periodically from the radio communication device.

[0076] Also the notification requirement judgement unit may make a judgement based on electric field strength of the received signal from the radio communication device

[0077] Also the radio communication device may be worn by its user, and may have a shape of watch and be worn on the wrist.

[0078] Further, the bidirectional radio communication may be radio communication that is based on a bluetooth technique.

[0079] The bidirectional radio communication may be based on the bluetooth technique and signal received periodically from the radio communication device may be an inquiry signal that slave unit receives from the master unit or an inquiry response signal that the master unit receives from the slave unit. These signals are defined by bluetooth specification.

[0080] A method of the present invention for controlling a radio communication device is characterized by comprising the steps: a transmit-receive step that carrys out local and bidirectional radio communication with another radio communication device; a communication judgement step that judges state of the bidirectional radio communication with the other communication device; and a notification step that notifies the user of information about the state of the bidirectional radio communication.

[0081] By this, state of bidirectional radio communication with a radio communication device is judged. Then, the user is notified of the state of the communication. Hence, the user can know the state of the communication with the radio communication device.

[0082] In a preferred aspect of the present invention, this control method may comprise a notification requirement judgement step that judges, based on the judgement for state of the bidirectional radio communication, whether or not to notify a user of the radio communication device of information about the state of the bidirectional radio communication.

[0083] In this case, when the communication state judgement step makes a judgement that communication quality has declined or the communication become impossible, the notification requirement judgement step may makes a judgement to notify.

[0084] The notification step may carries out various notification operations. When the notification requirement judgement step judges that notification is necessary, a notification judgement step judges which notification operation should be used. Then the notification step carries out the specified notification operation.

[0085] Also there may be several radio communication devices. In this case, the communication state judgement step may judge states of bidirectional communications with these radio communication devices, the notification requirement judgement step judges whether or not to tell user of information about the bidirectional communication for each radio communication device based on the judgement done by the communication state judgement step, and the notification judgement step may make a judgement about what notification operation to use.

[0086] Communication state may be divided into several steps. The communication state judgement step judges which state the bidirectional radio communication is in with the radio communication device. The notification requirement judgement step judges whether or not to tell user of information about communication based on judgement done by the communication state judgement step. The notification judgement step judges which notification operation should be used based on the judgement done by the notification requirement judgement step.

[0087] Also there may be a power-off detection step that detects when the radio communication device is powered off. The notification requirement judgement step does not carry out notification operation for the radio communication device that is detected to be powered off.

[0088] There also may be a notification unnecessary storage step that stores identification information of the radio communication device to which notification operation is not

carried out. The notification requirement judgement step may make a judgement that notification operation is not done to the communication device whose identification information is stored in the notification unnecessary storage step.

[0089] The present invention further provides a control program comprising: a program that makes a control unit of a radio communication device carry out local and bidirectional radio communication between the radio communication device and a radio communication device; a program that makes the control unit of the radio communication device judge state of bidirectional radio communication; and a program that makes the control unit of the radio communication device notify the user of information about the state of the bidirectional radio communication.

[0090] The present invention also provides a computer readable storage medium that stores a control program, the control program comprising: a program that makes a control unit of a radio communication device carry out local and bidirectional radio communication between the radio communication device and a radio communication device; a program that makes the control unit of the radio communication device judge state of the bidirectional radio communication; and a program that makes the control unit of the radio communication device notify the user of information about the state of the bidirectional radio communication.

BRIEF DESCRIPTION OF THE DRAWINGS

[0091] **FIG. 1** shows a configuration of a mobile telephone system of the first embodiment of the present invention.

[0092] **FIG. 2** shows a configuration of a watch-shaped information processing device of the first embodiment.

[0093] **FIG. 3** shows a configuration of an antenna unit, a switching circuit, a receiver circuit, and a transmitter circuit of the watch-shaped information processing device.

[0094] **FIG. 4** is a sequence chart showing an operation of the first embodiment.

[0095] **FIGS. 5 and 6** are the watch-shaped information processing devices displaying information on their displays.

[0096] **FIG. 7** shows a configuration of a mobile telephone of a mobile telephone system of the second embodiment.

[0097] **FIG. 8** shows a configuration of a watch-shaped information processing device of the second embodiment.

[0098] **FIG. 9** shows a configuration of a central control circuit of the watch-shaped information processing device of the second embodiment.

[0099] **FIG. 10** shows an address management table stored in a nonvolatile memory of the watch-shaped information processing device of the second embodiment.

[0100] **FIG. 11** is a memory map showing content of the nonvolatile memory of the watch-shaped information processing device of the second embodiment.

[0101] **FIG. 12** is a flowchart for a message recording operation of the second embodiment.

[0102] **FIGS. 13 and 14** form a sequence chart of the second embodiment for an operation of asking the caller to wait for a moment.

[0103] **FIG. 15** is the watch-shaped information processing device of the second embodiment displaying information on its display asking the caller to wait for a moment.

[0104] **FIGS. 16 and 17** form a sequence chart of the second embodiment for an operation of activating answering machine function.

[0105] **FIGS. 18, 19**, and **20** are the watch-shaped information processing devices of the second embodiment displaying information on their displays during conducting answering machine function.

[0106] **FIG. 21** is a flowchart for a message playing operation of the second embodiment.

[0107] **FIGS. 22 and 23** are the watch-shaped information processing devices of the second embodiment displaying information during playing caller's message.

[0108] **FIG. 24** shows a mobile telephone system of the third embodiment.

[0109] **FIGS. 25 and 26** form a sequence chart for an operation of the third embodiment.

[0110] **FIG. 27** shows a configuration of a modification of the mobile telephone of the first, second, and third embodiments.

[0111] **FIGS. 28 and 29** are modification of the watch-shaped information processing devices of the first, second, and third embodiment displaying information on their displays.

[0112] **FIG. 30** shows a configuration of a radio communication system of the fourth embodiment.

[0113] **FIGS. 31A and 31B** are to explain notification operation of the fourth embodiment.

[0114] **FIG. 32** shows a configuration of a mobile telephone of the fourth embodiment.

[0115] **FIG. 33** shows a configuration of a watch-shaped information processing device of the fourth embodiment.

[0116] **FIG. 34** is a timing chart of transmitting inquiry signals and responding them in a sniff mode of the bluetooth communication.

[0117] **FIG. 35** is a count table of the fourth embodiment.

[0118] **FIG. 36** is a notification table of the fourth embodiment.

[0119] **FIG. 37** is a flowchart for process of updating the notification table of the fourth embodiment.

[0120] **FIG. 38** is a sequence chart showing operations for shutting off a bluetooth device.

[0121] **FIG. 39** is a flowchart showing a notification process of the fourth embodiment.

[0122] **FIG. 40** is a sequence chart of the system of the fourth embodiment.

[0123] **FIGS. 41, 42**, and **43** are the watch-shaped information processing devices of the fourth embodiment displaying information.

[0124] **FIG. 44** shows piconets of the fourth embodiment.

BEST MODE OF CARRYING OUT THE INVENTION

[0125] With reference to the drawings, preferred embodiments of the present invention will be described.

[0126] A. FIRST EMBODIMENT

[0127] **FIG. 1** shows a configuration of a mobile telephone system **10** of the first embodiment of the present invention. The service of this mobile telephone system is available to a number of mobile telephones. But, in order to simplify explanations, only mobile telephones **11** and **13** are shown in **FIG. 1**, and explanations will be given of the service that the two mobile telephones receive.

[0128] The mobile telephone system **10** includes a watch-shaped information processing device **12** that is used together with the mobile telephone **11**. The watch-shaped information processing device **12** is one example of the radio communication devices of the present invention, and the mobile telephone **11** is one example of mobile telephones of the present invention. The watch-shaped information processing device **12** performs bidirectional radio communication with the mobile telephone **11**. The mobile telephone system **10** also has a mobile network **17** and a plurality of radio base stations **14** that are connected with the mobile network **17**. The radio base station **14** established a radio communication line with the mobile telephone **11** or **13**. The mobile network **17** is connected with a public switched telephone network (PSTN) **16**. Fixed telephones **15** and other equipment are connected with the PSTN **16**. The mobile telephones **11** and **13** are able to communicate with each other via the mobile network **17**. Also, the mobile telephones **11** and **13** are able to communicate with the fixed telephone **15** via the mobile network **17** and the PSTN **16**.

[0129] **FIG. 2** shows a configuration of a watch-shaped information processing device **12** of the first embodiment. A transmitter circuit **24** in **FIG. 2** conducts signal transmitting operation to the mobile telephone **11**. A receiver circuit **23** in **FIG. 2** conducts signal receiving operation from the mobile telephone **11**. The transmitter circuit **24** (described later) has a circuit for generating oscillation signal SVCO. The oscillation signal SVCO is used for signal transmitting operation in the transmitter circuit **24** and also is provided to the receiver circuit **23** for receiving operation. The frequency of the oscillation signal SVCO is defined by synthesizer control signal SSY output from a central control circuit **25**. A switching circuit **22** switches an antenna unit **21** between to an input terminal of the receiver circuit **23** and to an output terminal of the transmitter circuit **24**.

[0130] In order for the watch-shaped information processing device **12** to receive signals, the antenna unit **21** is connected to the input terminal of the receiver circuit **23** by the switching circuit **22**. Then the receiver circuit **23** receives signals from the mobile telephone **11** via the antenna unit **21**. Then, the receiver circuit **23** demodulates these signals into a received data DRX by using the oscillation signal SVCO to output to the central control circuit **25**.

[0131] On the other hand, in order for the watch-shaped information processing device **12** to transmit signals, the antenna unit **21** is connected to the output terminal of the transmitter circuit **24**. Then the transmitter circuit **24** receives a transmission data DTX from the central control circuit **25**. The transmitter circuit **24** produces high frequency signal with a frequency designated by the synthesizer control signal SSY. The modulation of the high frequency signal is done based on the transmission data DTX. The transmitter circuit **24** sends the high frequency signal to the mobile telephone **11** via the antenna unit **21**.

[0132] The central control circuit **25** controls components of the watch-shaped information processing device **12**, but detailed description of these controls will be given later.

[0133] Under the control of the central control unit **25**, an electronic sound unit **26** produces electronic sound or buzzer sound to notify the user of states of the mobile telephone **11** or the watch-shaped information processing device **12**. These states may be, for example, a device state such as calling state, call-receiving state, or error state. A vibrator **27** vibrates also under the control of the central control circuit **25** to notify the user of states of the mobile telephone **11** or the watch-shaped information processing device **12**. A light emitting unit **28** has an LED or other light emitting device, and emits light under the control of the central control circuit to notify the user of states of the mobile telephone **11** or the watch-shaped information processing device **12**. A display unit **29** is equipped with a liquid crystal display or an organic electroluminescence display, and displays information on states of the mobile telephone **11** or the watch-shaped information processing device **12** under the control of the central control circuit **25**.

[0134] An external input unit **30** is equipped with buttons, a touch panel, and so on. Operating state of the external input unit **30** is checked by the central control circuit **25**.

[0135] A reference signal generator circuit **32** is connected with an oscillator **31**, which generates a source oscillation signal having a reference frequency. The reference signal generator circuit **32** generates various reference signals to output to the central control circuit **25**.

[0136] A nonvolatile memory **33** stores various data and programs. These data and programs are not lost even when power to the nonvolatile memory **33** is lost. The data stored in the nonvolatile memory **33** include a unique ID number NID for the watch-shaped information processing device **12** and another unique ID number NIDT for the mobile telephone **11** that. is associated with the watch-shaped information processing device **12**. The programs stored in the nonvolatile memory **33** include a control program that controls the watch-shaped information processing device **12** when, for example, there is an incoming call to the mobile telephone **11**. A central processing unit (CPU) in the central control circuit **25** functions as a controller unit of the radio communication devices of the present invention by executing the control programs stored in the nonvolatile memory **33**.

[0137] A battery **34** supplies power to components of the watch-shaped information processing device **12**.

[0138] A voice codec **38** decodes output signals of the central control circuit **25** to output voice data to a voice interface unit (voice I/F unit) **39**. Also, the voice codec **38** encodes voice data from the voice interface unit **39** to output to the central control circuit **25**.

[0139] The voice interface unit **39** performs digital-to-analog conversion on the voice data that is output by the voice codec **38** to output analog voice signal, then a speaker **35** outputs it. Also, the voice interface unit **39** performs analog-to-digital conversion on analog voice signals that are input via a microphone **36** to output voice data to the voice codec **38**.

[0140] In this configuration, the receiver circuit **23** and the transmitter circuit **24** function as a transmitter-receiver unit of the radio communication device of the present invention. The central control circuit **25**, the electronic sound unit **26**, the vibrator **27**, the light emitter unit **28**, and the display unit **29** function as an incoming-call-notification unit of the radio communication device of the present invention.

[0141] **FIG. 3** shows a configuration of the antenna unit **21**, the switching circuit **22**, the receiver circuit **23**, and the transmitter circuit **24** of the watch-shaped information processing device **12**. As shown in **FIG. 3**, the antenna unit **21** is equipped with an antenna **21**A and an antenna filter **21**B. The antenna filter **21**B eliminates unnecessary signal that may exist on the incoming signal and outputs only necessary signal to the receiver circuit **23**. The antenna filter **23** B also eliminates unnecessary signal that may exist on the output signal of the transmitter circuit **24** and outputs only necessary signal to the antenna **21**A.

[0142] In the receiver circuit **23**, an RF amplifier **23**A amplifies the received signal of the antenna unit **21** to output to a mixer **23**C. The mixer **23**C is also provided with the oscillation signal SVCO from the transmitter circuit **24** via a buffer amplifier **23**B. The mixer **23**C then mixes these two signals and outputs to a bandpass filter **23**D.

[0143] The bandpass filter **23**D selects signal which has Intermediate Frequency (IF) from the output signals of the mixer **23**C to output to an IF amplifier **23**E. The IF amplifier **23**E amplifies the signal with the IF to output to a demodulator circuit **23**F. While outputting the signal with the IF, the IF amplifier **23**E outputs to the central control circuit **25** a signal strength signal SSS that indicates intensity of the received signal. The demodulator circuit **23**F demodulates the signal with the IF into the received data DRX to the central control circuit **25**.

[0144] In the transmitter circuit **24**, a PLL circuit **24**A, a low pass filter **24**B, and a voltage controlled oscillator (VCO) **24**E cooperate to generate the oscillation signal SVCO. The frequency of the oscillation signal SVCO is defined by the synthesizer control signal SSY.

[0145] A modulator circuit **24**H modulates carrier using the transmission data DTX to output signal which has IF. The signal with the IF is provided to a mixer **24**G via an IF amplifier **24**C and a low pass filter **24**D. The mixer **24**G mixes the signal with the IF and the oscillation signal SVCO to output high frequency signal. The high frequency signal is amplified by a power amplifier **24**F and then provided to the antenna unit **21** via the switching circuit **22**.

[0146] Description of the antenna unit, the switching circuit, the receiver circuit, and the transmitter circuit of the watch-shaped information processing device **12** was given above. The mobile telephone **11** also has the similar components in it.

[0147] The antenna unit, the switching circuit, the receiver circuit, and the transmitter circuit of the mobile telephone **11** correspond to a transmitter-receiver unit of the mobile telephone of the present invention. Also, the central control circuit (not shown in the figure) of the mobile telephone **11** that performs data communication using the above transmitter-receiver unit corresponds to a control unit of the mobile telephone of the present invention.

[0148] **FIG. 4** is a sequence chart showing an operation of the first embodiment. With reference to the figure, the operation of the first embodiment will be described.

[0149] At the initial state S1, the mobile telephone **11** periodically transmits an identification signal (which corresponds to the ID number NIND of the mobile telephone **11**) having a synchronization signal using a carrier of 430 MHz or 2.45 GHz. On the other hand, the watch-shaped information processing device **12** performs carrier sensing operation. As long as the watch-shaped information processing device **12** is receiving the identification signal from the mobile telephone **11**, a synchronization of bidirectional communication exists between the watch-shaped information device **12** and the mobile telephone **11**. When there is this synchronization and the watch-shaped information processing device **12** received from the mobile telephone **11** the identification signal that corresponds to the ID number NIND stored in the nonvolatile memory **33**, the watch-shaped information processing device **12** can communicate with the mobile telephone **11**. By this communication, the watch-shaped information processing device **12** can recognize the operating state of the mobile telephone **11**.

[0150] Also at the initial state S1, as shown in **FIG. 5, a** date, day of the week, and a current time are shown on the display unit **29** of the watch-shaped information processing device **12**. Also shown on the display unit **29** is a signal strength indicator SSI that tells strength of the received signal from the mobile telephone **11**. The signal strength indicator SSI is displayed depending on the signal strength signal SSS output from the IF amplifier **23**E of the receiver circuit **23**.

[0151] The reason to display the signal strength indicator SSI is to notify the user of quality deterioration or loss of radio communication between the mobile telephone **11** and the watch-shaped information processing device **12**.

[0152] When there is an incoming call to the mobile telephone **11** as shown in **FIG. 4** (step S2), the mobile telephone **11** examines if there is a communication link with the watch-shaped information processing device **12** (step S3). The incoming call may be, for example, from the fixed telephone **15** via the PSTN, the mobile network **17**, and the radio base station **14**, or from another mobile telephone **13** via the radio base station **14** and the mobile network **17**.

[0153] When the watch-shaped information processing device **12** is not within a given range of the mobile telephone Hand there is no communication link between them (step S3: NO), the mobile telephone **11** notifies the user of incoming call by producing sound from its own speaker or producing vibration by vibrator (step S4).

[0154] On the other hand, when there is a communication link between the mobile telephone **11** and the watch-shaped information processing device **12** (step S3: YES), the mobile telephone **11** pages the watch-shaped information processing device **12** and sends information about the incoming call (step S5). In more detail, the mobile telephone **11** generates

a send data DTXT that includes information to the effect that there is an incoming call, an ID number NID of the watch-shaped information processing device **12**, and a telephone number of the caller. Then the mobile telephone **11** modulates carrier using the send data DTXT to output to the watch-shaped information processing device **12** an incoming call notification signal which is a high frequency signal. As a circuit to generate a high frequency signal in the mobile telephone **11**, a similar circuit to the transmitter circuit **24** in **FIG. 3** is used.

[**0155**] In the watch-shaped information processing device **12**, the incoming call notification signal is received in the antenna unit **21** and the receiver circuit **23** demodulates the incoming call notification signal to the received data DRX (step S**6**). This received data DRX includes information to the effect that there is an incoming call, an ID number NID of the watch-shaped information processing device **12**, and a telephone number of the caller.

[**0156**] On receiving the received data DRX, the central control circuit **25** determines that there is an incoming call to the mobile telephone **11**, and then notifies user of incoming call and displays information (step S**7**). In more detail, in order to notify the user of incoming call, the central control circuit **25** controls the electronic sound unit **26** to produce a buzzer sound or an electronic sound, the vibrator **27** to produce a vibration, or the light emitting unit **28** to blink light emitting device such as an LED. The central control circuit **25** also extracts the telephone number of the caller from the received data DRX, and displays on the display unit **29** the telephone number and other related information, if any information. such as name of the caller is registered in advance. **FIG. 6** shows the information for this case. Shown on the display unit **29** in **FIG. 6** are the telephone number of the caller and a phrase meaning call incoming.

[**0157**] When the user notices an incoming call, s/he takes the mobile telephone **11** from the bag and makes a conversation. However, there is a case when the user cannot answer the incoming call. In that case, by the following operation, the user can send information telling that the user cannot answer the phone at the moment. The operation can be that the user operates buttons **30**A, **30**B, and **30**C of the external input unit **30** to send instruction from the watch-shaped information processing device **12** to the mobile telephone **11** (steps S**8** and S**9**). The instruction may be for sending a voice message that asks the caller to wait for a moment. When the mobile telephone **11** receives the instruction, it answers the call automatically and makes a communication link. Then, the mobile telephone **11** reads an encoded data of voice message from an unshown nonvolatile memory. The voice message may be like "I am not able to answer the phone at the moment, please wait for a moment." Then the mobile telephone **11** sends the encoded data to the caller (step S**11**).

[**0158**] By this embodiment, when there is an incoming call to the mobile telephone, because the watch-shaped information processing device is notified of the incoming call, its user can recognize the incoming call and see caller's phone number without taking the mobile telephone from the bag.

[**0159**] B. SECOND EMBODIMENT

[**0160**] **FIG. 7** shows a configuration of a mobile telephone **11**A of a mobile telephone system of the second embodiment, and **FIG. 8** shows a configuration of a watch-shaped information processing device **12**A of the mobile telephone of this mobile telephone system.

[**0161**] The mobile telephone system of the second embodiment has similar configuration to that shown in **FIG. 1**. But the mobile telephone **11** is replaced with the mobile telephone **11**A and the watch-shaped information processing device **12** with the watch-shaped information processing device **12**A.

[**0162**] In this mobile telephone system, when there is an incoming call to the mobile telephone **11**A, the mobile telephone **11**A sends an incoming call notification signal to the watch-shaped information processing device **12**A. Based on the incoming call notification signal, the watch-shaped information processing device **12**A notifies the user of the incoming call. Also, the watch-shaped information processing device **12**A sends pre-stored voice message to the mobile telephone **11**A based on user's instruction. This voice message is transmitted to the caller via the mobile network **17**.

[**0163**] Next, with reference to **FIG. 7, a** configuration of the mobile telephone **11**A will be described.

[**0164**] As shown in **FIG. 7, a** bluetooth module **42** performs bidirectional communication with the watch-shaped information processing device **12**A via a antenna **41** for bluetooth.

[**0165**] A microprocessor **43** has a read only memory (ROM) and a random access memory (RAM) for storing various data. The microprocessor **43** controls communication, application, and entire units of the mobile telephone **11**A. Main control operation conducted by the microprocessor **43** are as follows; a control for sending an incoming call notification signal to the watch-shaped information processing device **12**A when there is an incoming call, and a control for processing for incoming call.

[**0166**] An LCD driver **45** drives a liquid crystal display (LCD) **44** under a control of the microprocessor **43**.

[**0167**] An RF unit **47** conducts a high frequency signal processing such as amplifying high frequency signal, and conducts a radio communication with mobile network via an antenna **46**.

[**0168**] A W-CDMA baseband processing unit **48** conducts baseband processing that is modulation/demodulation of the baseband signal for wide-band code division multiple access (W-CDMA).

[**0169**] A voice codec **49** decodes the output of the W-CDMA baseband processing unit **48** to output voice data and encodes voice data from a voice interface (IF) unit **52** to output to the W-CDMA base band processing unit **48**.

[**0170**] The voice interface (IF) unit **52** conducts a digital-to-analog conversion on the voice data output from the voice codec **49** into analog voice signal, and voice sound is output from a speaker **50**. The voice interface unit **52** also conducts a digital-to-analog conversion on analog signal input from a microphone **51** into a voice data, and the voice data is output to the voice codec **49**.

[**0171**] The external input unit **56** is equipped with various operation keys, an operation stick, a touch panel, and a jog dial, and operated by the user.

[0172] Next, configuration of the bluetooth module **42** will be described.

[0173] An RF unit **54** of the bluetooth module **42** performs high frequency signal processing such as amplifying high frequency signal and performs bidirectional communication with the watch-shaped information processing device **12**A.

[0174] A baseband processing unit **55** modulates/demodulates baseband signals based on bluetooth technique.

[0175] Also, the bluetooth module **42** has a flash memory, a voltage regulator, a quartz oscillator, and other peripherals (all not shown). The configuration of this bluetooth module is already known.

[0176] The flash memory of the bluetooth module **42** stores various necessary information for bluetooth radio communication such as a bluetooth device address, a link key, and an encryption key. The bluetooth device address is used for identifying other bluetooth devices. The link key is used for authorizing radio communication when starting it. The encryption key is used for encrypted communication.

[0177] The bluetooth module **42** with the above configuration transmits, based on instructions from the microprocessor **43**, to the watch-shaped information processing device **12**A control data such as incoming call notification signal that indicates there is an incoming call. This bluetooth module **42** also sends to the watch-shaped information processing device **12**A voice data that is sent from other telephone via the mobile network **17**. Also, the bluetooth module **42** receives various control data and voice data that are sent from the watch-shaped information processing device **12**A, and outputs the received data to the microprocessor **43** and the W-CDMA base band processing unit **48** via a bus **53**.

[0178] Next, configuration of the watch-shaped information processing device **12**A will be described with reference to **FIG. 8**.

[0179] The watch-shaped information processing device **12**A shown in **FIG. 8** is similar to the watch-shaped information processing device **12** of the first embodiment shown in **FIG. 2**. However, the antenna unit **21**, the receiver circuit **23**, and the transmitter circuit **24** are replaced with an antenna **61** for bluetooth and a bluetooth module **62**. The bluetooth module **62** functions as a transmitter-receiver unit of the radio communication device of the present invention.

[0180] The bluetooth module **62** has a similar configuration to that of the above mentioned bluetooth module **42**. An RF unit **54** of the bluetooth module **62** performs high frequency signal processing such as amplifying high frequency signal and performs bidirectional communication with the watch-shaped information processing device **11**A. A baseband processing unit **64** modulates/demodulates baseband signals using bluetooth technique. Also, the bluetooth module **62** has a flash memory, a voltage regulator, a quartz oscillator, and other peripherals (all not shown). The configuration of this bluetooth module is already known. The flash memory of the bluetooth module **62** stores various necessary information for bluetooth radio communication such as a bluetooth device address, a link key, and an encryption key. The bluetooth device address is used for identifying other bluetooth devices. The link key is used for authorizing radio communication when starting it. The encryption key is used for encrypted communication.

[0181] The bluetooth module **62** transmits various control data generated by the central control circuit **25**A and voice data read from the nonvolatile memory **33** to the watch-shaped information processing device **11**A. The bluetooth module **62**, also, receives various control data and voice data that are sent from the mobile telephone **11**A, and outputs the received data to the central control circuit **25**A.

[0182] The nonvolatile memory **33** stores various messages such as for asking the caller to wait for a moment and for answering machine function. Also, the caller stores his or her message in the nonvolatile memory **33**. The nonvolatile memory **33** also stores a process table that is described later. The nonvolatile memory **33** also stores control programs that perform notification of incoming call when the incoming call notification signal from the mobile telephone **11**A is received, and that make the mobile telephone **11**A to conduct a process for incoming call. By performing these control programs, the central control circuit **25**A functions as a control unit of the radio communication device of the present invention.

[0183] Other components are basically the same as those shown in **FIG. 2**, therefore, the description for them is not given here.

[0184] Next, the central control circuit **25**A of the watch-shaped information processing device **12**A will be described.

[0185] The central control circuit **25**A controls the bluetooth module **62** and transmits/receives voice data and control data to and from the mobile telephone **11**A. In this case, the central control circuit **25**A selects from four transmit/receive modes to transmit control data, transmit voice data, receive control data, and receive voice data.

[0186] **FIG. 9** shows a configuration of a central control circuit **25**A.

[0187] As shown in **FIG. 9**, the central control circuit **25**A has a central processing unit (CPU) **2557**, switching elements **2551** and **2552**, a ROM, and a RAM. The central control circuit **25**A can also perform data communication on asynchronous connection less (ACL) link and synchronous connection oriented (SCO) link.

[0188] The ACL link is an asynchronous communication link defined in the bluetooth technical specification. In the bluetooth system, two or more units sharing the same channel form a piconet. One Bluetooth unit acts as the master of the piconet, whereas the other unit(s) acts as slave(s). Using the ACL link, the master unit performs data communication with several slave units. Effective communication speed in the ACL link varies depending on the number of slaves and the amount of exchanged data in the piconet. Also, the master polls the slaves based on state of the communication slot, and performs data communication with the slaves using empty communication slot. Therefore, the ACL link is usually used for non-real-time communication.

[0189] The watch-shaped information processing device **12**A of the second embodiment uses the ACL link to exchange asynchronous data that does not require real time processing with the mobile telephone **11**A. The asynchro-

nous data here can be control data used for various instructions and controls among the watch-shaped information processing device **12**A and the mobile telephone **11**A.

[**0190**] When conducting communication on the ACL link, the CPU **2557** sends a buffer select control signal to the switching elements **2551** and **2552** to switch the switching element **2551** to an ACL buffer memory **2553** for receiving and to switch the switching element **2552** to an ACL buffer memory **2552** for transmission. Then the received data DRX output from the bluetooth module **62** is written in the ACL buffer memory **2553** for receiving via the switching element **2551**. When one packet full of asynchronous data is written, an unshown memory controller transmits a receive interrupt signal to the CPU**2557**. In response to the receive interrupt signal, the CPU **2557** reads the asynchronous data stored in the ACL buffer memory **2553** for receiving. On the other hand, asynchronous data generated by the CPU **2557** is written on an ACL buffer memory **2555** for transmission. Then the asynchronous data is read from the ACL buffer memory **2555** for transmission and is output to the bluetooth module **62** via the switching element **2552** as the transmission data DTX. When one packet full of control data is sent and the ACL buffer memory **2555** for transmission becomes empty, an unshown memory controller transmits a data sending completion interrupt signal to the CPU**2557**. In response to the data sending completion interrupt signal, the CPU **2557** writes in the ACL buffer memory **2555** for transmission the asynchronous data to be sent next.

[**0191**] The above is detailed configuration of the second embodiment for communication on the ACL link.

[**0192**] Next, the SCO link will be described. The SCO link is a synchronous communication link defined in the bluetooth technical specification. This SCO link is a point-to-point link between the master and a specific slave. The SCO link reserves slots for communication between the master and the slave at a given interval, and can therefore have a certain communication speed (in this embodiment 64 kbps). Therefore, the SCO link is usually used for real-time communication.

[**0193**] The watch-shaped information processing device **12**A of the second embodiment exchanges voice data by using the SCO link.

[**0194**] When conducting communication on the SCO link, the CPU **2557** sends a buffer select control signal to the switching elements **2551** and **2552** to switch the switching element **2551** to the SCO buffer memory **2554** for receiving and to switch the switching element **2552** to the SCO buffer memory **2556** for transmission. Then the received data DRX output from the bluetooth module **62** is written in the SCO buffer memory **2554** for receiving via the switching element **2551**. When one packet full of asynchronous data is written, the unshown memory controller transmits a receive interrupt signal to the CPU**2557**. In response to the receive interrupt signal, the CPU **2557** reads voice data stored in the SCO buffer memory **2554** for receiving.

[**0195**] On the other hand, transmission operation is as follows. Several voice messages such as response message are stored in the nonvolatile memory **33** in advance. Voice data for telephone communication is stored in an unshown RAM by using the microphone **36**, the voice interface unit **39**, and voice codec **38**. Voice data stored in the nonvolatile memory **33** or the unshown RAM is read by the CPU **2557** and written in an SCO buffer memory **2556** for transmission. Then the voice data is read from the SCO buffer memory **2556** for transmission and is output to the bluetooth module **62** via the switching element **2552** as the transmission data DTX. When one packet full of voice data is sent and the SCO buffer memory **2556** for transmission becomes empty, an unshown memory controller transmits a data requiring interrupt signal to the CPU**2557**. In response to the data requiring interrupt signal, the CPU **2557** reads voice data to be sent next from the nonvolatile memory **33** or the unshown RAM to write in the SCO buffer memory **2556** for transmission.

[**0196**] The above is detailed configuration of the second embodiment for communication on the SCO link.

[**0197**] Next, the nonvolatile memory **33** will be described.

[**0198**] The nonvolatile memory **33** stores voice data for various messages and an address management table AMT having memory address of the above voice data.

[**0199**] **FIG. 10** shows an address management table AMT stored in a nonvolatile memory of the watch-shaped information processing device of the second embodiment. **FIG. 11** is a memory map showing content of the nonvolatile memory **33**.

[**0200**] As shown in **FIG. 10**, message types and memory addresses for the voice data of the message types are associated with each other and written in the address management table AMT.

[**0201**] In **FIG. 10**, for example, "please wait message" is a message which is sent to the caller when the user cannot answer the phone at the moment. To illustrate, it may be a message such as "please wait for a moment, I'll answer your call soon".

[**0202**] In **FIG. 10**, voice data for the "please wait message" is stored in a memory area with memory address "ad0001" to "ad0010" of the nonvolatile memory **33**. When the central control circuit **25**A reads the "please wait message", the central control circuit **25**A sees the address management table AMT to get the memory address for the "please wait message". Using the address, the central control circuit **25**A reads data of the "please wait message" from the nonvolatile memory **33**. The read data is then sent to the mobile telephone **11**A via the bluetooth module **62** and the antenna **61** for bluetooth. Then the data is sent from the mobile telephone **11**A to the telephone of the caller, and finally voice is output at the caller's telephone.

[**0203**] In this case, the data for the "please wait message" may be stored in the nonvolatile memory **33** of the watch-shaped information processing device **12**A prior to shipment. Also, the user can store his or her own data for the "please wait message" by using the microphone **36**, conducting analog-to-digital conversion on his or her voice, and storing in the nonvolatile memory **33**. When the user stores his or her own data for the "please wait message", the central control circuit **25**A sees the address management table AMT and acquires the memory address for the data. Then the central control circuit **25**A designates the acquired memory address as a writing address, and writes the data input by the user into the nonvolatile memory **33**.

[0204] "Call response message" shown in **FIG. 10** is a message sent to the caller when the user of the mobile telephone **11**A cannot answer the phone. The message, for example, may be "I am not available at the moment, please leave a message after the tone".

[0205] In **FIG. 10**, voice data for the call response message is stored in a memory area with memory address "ad0011" to "ad0020" of the nonvolatile memory **33**. The central control circuit **25**A reads the data for call response message as follows.

[0206] First, the central control circuit **25**A sees the address management table AMT to get the memory address for the call response message.

[0207] Then, using the address, the central control circuit **25**A reads data of the call response message from the nonvolatile memory **33**. The read data is then sent to the mobile telephone **11**A via the bluetooth module **62** and the antenna **61** for bluetooth in the same way as the data for "please wait message". Then the data is sent from the mobile telephone **11**A to the telephone of the caller, and finally voice is output at caller's telephone.

[0208] This data of the call response message may also be stored in the watch-shaped information processing device **12**A prior to shipment. Also, the user can store his or her own voice for the call response message by using the microphone **36**. When the user stores his or her own data for the call response message, the central control circuit **25**A sees the address management table AMT and acquires the memory address for the data. Then the central control circuit **25**A designates the acquired memory address as a writing address, and writes the data input by the user into the nonvolatile memory **33**.

[0209] "Caller's message No. 1" to "caller's message No. 10" shown in **FIG. 10** are messages that the caller left as messages to the user of the mobile telephone **11** when they heard the above "call response message". In **FIG. 10**, it is possible to store up to ten messages.

[0210] As shown in **FIG. 11**, in a memory area for voice data of the caller's message (hereinafter referred to as caller's message data), text data indicating the time of the incoming call (hereinafter referred to as incoming call time data) and other text data indicating the caller (hereinafter referred to as caller data) are stored. In a memory region after these data, voice data of caller's message are stored. The central control circuit **25**A generates the incoming call time data based on time kept by the time keeping function of the watch-shaped information processing device **12**A. Also, by using a caller's phone number display service provided by the mobile network **17** (this service is already known in America as a caller ID), caller data is acquired. Then the central control circuit **25**A associates the incoming call time data and the caller data with the caller's message and writes them on the nonvolatile memory **33**.

[0211] When recording the caller's message data, the central control circuit **25**A sees the address management table AMT and acquires a memory address for the caller's message data.

[0212] Then the central control circuit **25**A stores the caller's message data based on the memory address. In this case, the central control circuit **25**A stores the caller's message data in an order from "caller's message No. 1", "caller's message No. 2" . . . to "caller's message No. 10". When reached to "caller's message No. 10", the central control circuit **25**A returns to the "caller's message No. 1", erases it, and writes a new caller's message data there.

[0213] When the central control circuit **25**A reads the caller's message data, it sees the address management table AMT and acquires the memory address for the caller's message the user desired.

[0214] Using the memory address, the central control circuit **25**A reads the incoming call time data, the caller data, and the caller's message.

[0215] The incoming call time data and the caller data are displayed on the display unit **29** in a text form. The caller's message data is decoded by the voice codec **38** and then output from the speaker **35** via the voice IF unit **39**.

[0216] Next, operations of the second embodiment will be described.

[0217] Hereinafter, explanation will be given in an order from;

[0218] (1) message recording process by the watch-shaped information processing device **12**A,

[0219] (2) operation while asking the caller to wait for a moment

[0220] (3) operation during answering machine function

[0221] (4) caller's message playing process by the watch-shaped information processing device **12**A.

[0222] (1) message recording process by the watch-shaped information processing device **12**A

[0223] **FIG. 12** is a flowchart for a message recording operation by the central control circuit **25**A of the watch-shaped information processing device **12**.

[0224] In **FIG. 12**, the central control circuit **25**A regularly scans the external input unit **30**, and makes a judgement if the user operates it or not (step Sa**1**).

[0225] When the user uses the external input unit **30** to instruct to record message asking to wait for a moment, the central control circuit **25**A detects user's operation (step Sa**1**; Yes) and starts reading voice data (step Sa**2**). To illustrate, the user speak to the speaker and the user's voice is sent to the voice interface unit **39**, which generates voice data. Then the voice data is encoded by the voice codec **38** and the central control circuit **25**A receives it.

[0226] Then the central control circuit **25**A sees the address management table AMT shown in **FIG. 10** in the nonvolatile memory **33**. The central control circuit **25**A then writes the voice data on a memory area with memory address that start from "ad0001"that is a memory area for "please wait message"in the nonvolatile memory **33** (step Sa**3**).

[0227] The processes in steps Sa**2** and Sa**3** are continued until the user operates to stop recording (step Sa**4**), or until a prescribed time period that is a longest recordable time period has elapsed (step Sa**5**). When there is either the recording stop operation or elapse of longest recordable time (step Sa**4** Yes or step Sa**5** Yes), process in **FIG. 12** ends.

[0228] In the above explanation for the recording process, "please wait message" is used. However, similar recording process is also used for recording the call response message. For the call response message, other memory area is used, though.

[0229] (2) operation while asking the caller to wait for a moment

[0230] With reference to a sequence chart in FIGS. **13**, and **14**, operation while asking the caller to wait for a moment will be described.

[0231] The watch-shaped information processing device **12**A carries out a synchronization establishment phase and a link connection phase, both are defined in the bluetooth specification, to form a communication network with the mobile telephone **11**A called a piconet (step Sb**1**). Then operational modes of the mobile telephone **11**A and the watch-shaped information processing device **12**A shifts to a low power consumption mode called a park mode (step Sb**2**). During the mode shifting, several processes are conducted in a master unit and a slave unit using a bluetooth device address and a link key. However, these processes are already known, explanation for them will not given here.

[0232] In the second embodiment, either the watch-shaped information processing device **12**A or the mobile telephone **11**A can be a master unit or a slave unit. The following explanation is given with the assumption that the mobile telephone **11**A is a master unit and the watch-shaped information processing device **12**A is a slave unit.

[0233] In this low power consumption mode, a date, the day of the week, and a current time are displayed as shown in **FIG. 5** on the display unit **29** of the watch-shaped information processing device **12**A. Displayed also on the displayed unit **29** is the signal strength indicator SSI that shows an intensity of the received beacon signal periodically sent from the mobile telephone **11**A. This indicator is based on the above mentioned signal strength signal SSS.

[0234] The reason to display the signal strength indicator SSI is to tell the user of quality deterioration or loss of radio communication between the mobile telephone **11**A and the watch-shaped information processing device **12**A.

[0235] When the user (referred to as a caller in this explanation) of the mobile telephone **13** in **FIG. 1** calls the user of the mobile telephone **11**A, the mobile network **17** sends a terminating call signal via the radio base station **14** (step Sb**3**). This terminating call signal includes telephone numbers of the mobile telephone **11**A and **13**.

[0236] When the mobile telephone **11**A in a service area of the radio base station **14** receives the terminating call signal, the mobile telephone **11**A instructs the watch-shaped information processing device **12**A, a slave unit, to shifts from the park mode to a link connection phase by the ACL link. By this, operation of the mobile telephone **11**A and the watch-shaped information processing device **12**A shift to the link connection phase by the ACL link (step Sb**5**).

[0237] When the ACL link is established, the mobile telephone **11**A sends the incoming call notification signal in ACL packets in order to notify the incoming call (step SB**6**). The incoming call notification signal includes the caller's telephone number of the mobile telephone **13** and information to the effect that there is an incoming call.

[0238] When the watch-shaped information processing device **12**A receives the ACL packets (step Sb**7**), it finds that there is an incoming call to the mobile telephone **11**A and displays information and notifies the user of incoming call. To illustrate, the watch-shaped information processing device **12**A extracts the caller's telephone number from the ACL packets. Then the watch-shaped information processing device **12**A displays on the display unit **29** telephone number or information corresponding to the telephone number to notify the user of the incoming call (step Sb**8**). One example what is displayed on the display unit **29** in this case is shown in **FIG. 6**. Instead of the telephone number of the caller, caller's name that is associated with the telephone number and stored in a memory (for example the nonvolatile memory **33**) of the watch-shaped information processing device **12**A may be displayed.

[0239] The watch-shaped information processing device **12**A also performs the incoming call notification (step Sb**9**). To illustrate, the central control circuit **25**A controls the electronic sound unit **26** to produce buzzer sound or electronic sound. The central control circuit **25**A also controls the vibrator **27** to vibrate. The central control circuit **25**A also controls the light emitting unit **28** to blink the light emitting device such as an LED.

[0240] When the user notices the incoming call notification, the user has to take the mobile telephone **11**A from the bag to answer the call. However, there are some cases where the user cannot answer the call or the user cannot open the bag. In these cases, the user uses the external input unit **30** on the watch-shaped information processing device **12**A for instruction for "please wait message".

[0241] The watch-shaped information processing device **12**A receives these inputs (step Sb**10**) and sends to the mobile telephone **11** ACL packets that includes instruction for "please wait message" (step Sb**11**).

[0242] When the mobile telephone **11**A receives the ACL packet (step Sb**12**), it extracts the instruction for "please wait message". In response to the instruction for "please wait message", the mobile telephone **11**A orders the radio base station **14** to make a communication link with the caller's mobile telephone **13** (step Sb**13**).

[0243] The radio base station **14** carries out a predetermined process such as for allocating a communication channel, and makes a communication line between the mobile telephone **11**A and the mobile telephone **13** (step Sb**14**).

[0244] Then the mobile telephone **11**A instructs the watch-shaped information processing device **12**A to shift from the link connection phase by the ACL link to the link connection phase by the SCO link.

[0245] In response to the instruction for phase shift, operations of the mobile telephone **11**A and the watch-shaped information processing device **12**A shift to the link connection phase by the SCO link (step Sb**15**).

[0246] After the SCO link is established, the watch-shaped information processing device **12**A sees the address management table AMT to acquire a readout address of "ad0001" to "ad0010". Then the watch-shaped information processing device **12**A reads the data for "please wait message" from the nonvolatile memory **33** and sends the

data to the mobile telephone **11**A via the SCO link (step Sb**16**). During this process, the caller's telephone number and a message "please wait for a moment" are shown on the display unit **29** of the watch-shaped information processing device **12**A to inform the user of the state as shown in **FIG. 15**.

[**0247**] When the mobile telephone **11**A receives data for "please wait message" using the bluetooth module **42**, the mobile telephone **11**A sends the data to the radio base station using the W-CDMA base band processing unit **48**, the RF unit **47**, and the antenna **46** (step Sb**17**).

[**0248**] The data for "please wait message" is received by the radio base station **14** (step Sb**18**), and then is sent to the caller's mobile telephone **13** via the mobile network **17**. Then the message is output from the speaker of the mobile telephone **13**. The user of the mobile telephone **13** hears the message and waits for a moment or hangs up the phone.

[**0249**] The process from the step SB**16** to the SB**18** is continued until the user of the mobile telephone **11**A operates the mobile telephone **11**A, and the caller is kept hearing the message for "please wait message".

[**0250**] When the user of the mobile terminal **11**A becomes able to operate it and conducts an off-hook operation using the external input unit **56**, the mobile telephone **11**A accepts the off-hook operation (step Sb**19**).

[**0251**] In response to the off-hook operation, the mobile telephone **11**A stops reading voice data from the bluetooth module **42**. Then the mobile telephone **11**A carries out processes for direct voice communication between the caller and the user of the mobile telephone **11**A (step Sb**20**).

[**0252**] To illustrate, the user speaks to the microphone **51**, then voice data is generated for the user's voice by the voice IF unit **52**, and then the voice data is encoded by the voice codec **49**. This voice data is sent to the radio base station **14** using the W-CDMA base band processing unit **48**, the RF unit **47**, and the antenna **46**.

[**0253**] Also, voice data sent from the mobile telephone **13** is output from the speaker **50** through the antenna **46**, the RF unit **47**, the W-CDMA base band processing unit **48**, the voice codec **49**, and the voice interface unit **52**.

[**0254**] The mobile telephone **11**A instructs the watch-shaped information processing device **12**A to shift from the link connection phase by the SCO link to the link connection phase by the ACL link. In response to the instruction for phase shift, operations of the mobile telephone **11**A and the watch-shaped information processing device **12**A shift to the link connection phase by the ACL link (step Sb**21**).

[**0255**] When the ACL link is established, in order to notify a communication start, the mobile telephone **11**A sends ACL packets that includes a communication start notification (step Sb**22**).

[**0256**] When the watch-shaped information processing device **12**A receives the above ACL packets (step Sb**23**), it detects the communication start notification in the ACL packets. By detecting the communication start notification, the watch-shaped information processing device **12**A judges that communication with the mobile telephone **11**A has started and makes a shift to the park mode in the same way as step Sb**2** (step Sb**24**).

[**0257**] After finishing the telephone communication, the user of the mobile telephone **11**A uses the external input unit **56** to conduct an on-hook operation. The mobile telephone **11**A accepts this operation (step Sb**25**) and sends a request for releasing the telephone line to the radio base station **14**, and by this the telephone line is released (step Sb**26**).

[**0258**] (3) operation during answering machine function

[**0259**] With reference to a sequence chart shown in **FIGS. 16 and 17**, operation during answering machine function will be described.

[**0260**] In **FIG. 16**, processes from step Sc**1** to Sc**9** are the same as those of from step Sb**1** to Sb**9** in **FIG. 13**, therefore explanation will not given for them. So explanation will start from the process of step Sc**10**.

[**0261**] By the incoming call notification in steps Sc**8** and Sc**9**, the user notices that there is an incoming call. However, when the user cannot answer the phone, the user uses, in a prescribed order, the external input unit **30** of the watch-shaped information processing device **12**A to use the answering machine function.

[**0262**] The watch-shaped information processing device **12**A accepts this operation (step Sc**10**), then it sends to the mobile telephone **11**A ACL packets that includes an order for answering machine function (step Sc**11**).

[**0263**] Also, advancing to step Sc**11** can be carried out in the following way. The watch-shaped information processing device **12**A starts time-counting when it receives the incoming call notification signal in step Sb**6**. And when a prescribed time period has passed without the above mentioned user's operation, the process advances to the step Sc**11**. Therefore, it is possible to advance to step Sc**11** even when the user does not notice the incoming call notification or the user does not carry the watch-shaped information processing device **12**A.

[**0264**] When the mobile telephone **11**A receives the above ACL packets (step Sc**12**), it detects the order for answering machine function. Then the mobile telephone **11**A orders the radio base station **14** to make a communication line (step Sc**13** in **FIG. 17**).

[**0265**] In response to this, the radio base station **14** carries out prescribed processes such as allocating communication channel to make a communication line between the mobile telephone **13** and the watch-shaped information processing device **12**A (step Sc**14**).

[**0266**] Then, the mobile telephone **11**A instructs the watch-shaped information processing device **12**A to shift from the link connection phase by the ACL link to the link connection phase by the SCO link. In response to the instruction for phase shift, operations of the mobile telephone **11**A and the watch-shaped information processing device **12**A shift to the link connection phase by the SCO link (step Sb**15**).

[**0267**] After the SCO link is established, the watch-shaped information processing device **12**A sees the address management table AMT to acquire a readout address of "ad0011" to "ad0020". Then the watch-shaped information processing device **12**A reads the data for "call response message" from the nonvolatile memory **33** and sends the data to the mobile telephone **11**A via the SCO link (step

Sc**16**). As shown in **FIG. 18**, during this process, the caller's telephone number and a message "call answering" are shown on the display unit **29** of the watch-shaped information processing device **12**A to inform the user of the state.

[**0268**] When the mobile telephone **11**A receives data for "call answering message" using the bluetooth module **42**, the mobile telephone **11**A sends the data to the radio base station using the W-CDMA base band processing unit **48**, the RF unit **47**, and the antenna **46** (step Sc**17**).

[**0269**] The data for "call answering message" is received by the radio base station **14** (step Sc**18**), and then is sent to the caller's mobile telephone **13** via the mobile network **17**. Then the message is output from the speaker of the mobile telephone **13**. The user of the mobile telephone **13** hears the message and speaks to the mobile telephone **13** in order to leave his or her message after the tone. His or her message is sent from the mobile telephone **13** to the mobile telephone **11**A via the mobile network **17** and the radio base stations **14** (step Sc**20**).

[**0270**] The mobile telephone **11**A receives the data for the message (step Sc**21**), and then sends the data to the watch-shaped information processing device **12**A via the SCO link (step Sc**22**).

[**0271**] The watch-shaped information processing device **12**A carries out the process for the step Sc**16**, and then advances to recording operation of caller's message (step Sc**19**). To illustrate, when the data for caller's message is received by the watch-shaped information processing device **12**A, it sees the address management table AMT in the nonvolatile memory **33** shown in **FIG. 10**. Then the watch-shaped information processing device **12**A writes the voice data for the caller's message in memory area for the caller's message. In this explanation, the data is written in an area for the "caller's message No. 1", and memory address for the "caller's message No. 1" starts "ad0021".

[**0272**] As shown in **FIG. 19**, during this process, the caller's telephone number and a message "recording caller's message" are shown on the display unit **29** of the watch-shaped information processing device **12**A to inform the user that the call is currently leaving a message.

[**0273**] After finishing leaving his or her message, the caller conducts an on-hook operation. In response to the on-hook operation, the mobile telephone **13** sends a request for releasing the telephone line to the radio base station **14**, and by this the telephone line between the radio base station **14** and the mobile telephone **11** is released (step Sc**23**).

[**0274**] When the communication line is released, the mobile telephone **11**A instructs the watch-shaped information processing device **12**A to shift from the link connection phase by the SCO link to the link connection phase by the ACL link. In response to the instruction for phase shift, operations of the mobile telephone **11**A and the watch-shaped information processing device **12**A shift to the link connection **16** phase by the ACL link (step Sc**24**).

[**0275**] After the ACL link is established, in order to notify a communication end, the mobile telephone **11**A sends ACL packets that includes a communication end notification (step Sc**25**).

[**0276**] When the watch-shaped information processing device **12**A receives the above ACL packets (step Sc**26**), it detects the communication end notification in the ACL packets.

[**0277**] By detecting the communication end notification, the watch-shaped information processing device **12**A judges that communication with the mobile telephone **11**A has ended and stops recording operation of voice data (step Sc**27**). As shown in **FIG. 20**, during this process, the caller's telephone number and a message "finish recording message" are shown on the display unit **29** of the watch-shaped information processing device **12**A to inform the user that the message recording is finished.

[**0278**] Then, the operations of the mobile telephone **11**A and the watch-shaped information processing device **12**A shift to the park mode (step Sc**28**) which is similar to step Sb**2**.

[**0279**] (4) caller's message playing process by the watch-shaped information processing device **12**A.

[**0280**] **FIG. 21** is a flowchart for a message playing operation of the second embodiment.

[**0281**] In **FIG. 21**, the central control circuit **25**A regularly scans the external input unit **30**, and makes a judgement if the user operates it or not (step Sd**1**).

[**0282**] When the user uses the external input unit **30** to instruct to play the caller's message, the central control circuit **25**A detects user's operation (step Sd**1**; Yes) and advances to step Sd**2**.

[**0283**] There are "last message playing operation" and "message playing operation by list" in the playing operation of the caller's message.

[**0284**] By the "last message playing operation", the last recorded message is played.

[**0285**] By the "message playing operation by list", first the list of all recorded caller's message are displayed, and then the message the user specified is played.

[**0286**] In step Sd**2**, the central control circuit **25**A makes a judgement which the auser's operation is between the above two.

[**0287**] When the central control circuit **25**A receives the last message playing operation for playing the caller's message No. 1 (step Sd**2**: last message play), it sees the address management table AMT to acquire a readout address from "ad0021" to "ad0030".

[**0288**] Then, using the acquired address, the central control circuit **25**A reads the caller's message from the nonvolatile memory **33** (step Sd**3**).

[**0289**] Then the central control circuit **25**A outputs the read caller's message to the voice codec **38**. By this, the caller's message is output from the speaker **35** (step Sd**4**). As shown in **FIG. 22**, during this process, the caller's telephone number and a message "playing caller's message No. 1" are shown on the display unit **29** of the watch-shaped information processing device **12**A to inform the user that the message is being played.

[**0290**] On the other hand, when the central control circuit **25**A receives "message playing operation by list" (step Sd**2**: playing operation by list), it sees the address management table AMT and acquires all the readout addresses for the caller's messages.

[0291] Using the readout addresses, the central control circuit **25**A reads only the incoming call time data and the caller data in the nonvolatile memory **33**, and displays them on the display unit **29** (step Sd**5**). As shown in **FIG. 23**, during this process, a message "message list" and property information on messages are shown on the display unit **29** of the watch-shaped information processing device **12**A. In **FIG. 23**, only a part of the list is shown. However, the user can scroll the screen right-and-left and up-and-below by using the external input unit **30**.

[0292] When the user specifies a caller's message, the central control circuit **25**A accepts this (step Sd**6**: Yes).

[0293] Then the central control circuit **25**A sees the address management table AMT and acquires the readout addresses for the specified caller's messages. Using the readout addresses, the central control circuit **25**A reads the caller's message in the nonvolatile memory **33** (step Sd**7**).

[0294] Then the central control circuit **25**A outputs the read caller's message to the voice codec **38**. The voice codec **38** decodes the data for the caller's message, and the caller's message is output from the speaker **35** (step Sd**4**).

[0295] When the specified message ends and the user wants to play other caller's message, the user operates to do so (step Sd**8**: No). By this, the process of the central control circuit **25**A returns to step Sd**1** and the above processes are again carried out.

[0296] After finishing the play of the message, when the user conducts an operation for ending the play (step Sd**8**: Yes), the processes in **FIG. 21** end.

[0297] As explained above, according to the second embodiment, since the incoming call notification signal of the mobile telephone **11**A is sent to the watch-shaped Information processing device **12**A, the user can notice the incoming call and see the telephone number of the caller without taking the mobile telephone **11**A from the bag.

[0298] Also, according to the second embodiment, by using the watch-shaped information processing device **12**A, the user can request the "please wait message" and a "call response message".

[0299] Also, the user can record the "please wait message" and "call response message" in his or her own voice by using the watch-shaped information processing device **12**A. The user also can record caller's messages in the watch-shaped information processing device **12**A, so the user can hear the caller's message anywhere anytime.

[0300] So, the watch-shaped information processing device **12**A becomes an interesting gadget to its user.

[0301] C. THIRD EMBODIMENT

[0302] In the second embodiment, the caller's messages are stored in the watch-shaped information processing device **12**A. In the third embodiment, the caller's messages are stored in a service center connected to the mobile network **17**.

[0303] **FIG. 24** shows a configuration of a mobile telephone system of the third embodiment. Only one difference of the third embodiment shown in **FIG. 24** from the first embodiment shown in **FIG. 1** is there is a service center **18** connected with the mobile network **17**.

[0304] The service center **18** has several servers. One of them is for storing caller's messages for each mobile telephone **11**A. Another of them is for accepting orders from the mobile telephones **11**A and for distributing the stored caller's messages in response to the orders.

[0305] Therefore, the watch-shaped information processing device **12**A does not have to store the caller's message in the nonvolatile memory **33**, which is the case in the second embodiment. In more detail, only the memory addresses for the "please wait message" and for "call response message" have to be stored in the address management table AMT (refer to **FIG. 10**) for the nonvolatile memory **33** in the watch-shaped information processing device **12**A. Also, no memory area for caller's messages are provided in the nonvolatile memory **33**.

[0306] Other components are the same as in the second embodiment, therefore, explanation for them will not given below.

[0307] Next, operation of the third embodiment will be described.

[0308] With reference to a sequence chart in **FIGS. 25 and 26**, operation during answering machine function will be described. However, message recording operation and operation during the "please wait message" are not described because they are the same operations explained in the second embodiment.

[0309] In **FIGS. 25 and 26**, processes from step Se**1** to Se**17** are the same as those of from step Sc**1** to Sc**17** in **FIGS. 16 and 17**, therefore explanation will not given for them. So explanation will start from the process of step Se**18**.

[0310] The data for the call response message that is sent from the mobile telephone **11**A is received by the radio base station **14** (step Se**18**). Then the data is sent to the mobile telephone **13** via the mobile network **17**. The message is output from the unshown speaker of the mobile telephone **13**.

[0311] On the other hand, the mobile telephone **11**A sends to the radio base station **14** an answering machine forward request for switching the current communication line between the mobile telephone **13** and the mobile telephone **11**A to other communication line between the mobile telephone **13** and the service center **18** (step Se**19**).

[0312] When an unshown exchange in the mobile network **17** receives the answering machine forward request via the radio base station **14**, it changes the current communication line between the mobile telephone **13** and the mobile telephone **11**A to other communication line between the mobile telephone **13** and the service center **18** (Step Se**20**). Then a communication end notification is sent form the radio base station **14** to the mobile telephone **11**A (step Se**21**). Thereby, the communication line between the mobile telephone **13** and the mobile telephone **11**A is released (step Se**22**).

[0313] After changing communication is finished, the user of the mobile telephone **13** speaks his or her message after the tone. The message is sent to the service center **18** via the mobile network **17**, and the service center **18** records the message.

[0314] When the communication line is released, the mobile telephone **11**A instructs the watch-shaped informa-

tion processing device **12**A to shift from the link connection phase by the SCO link to the link connection phase by the ACL link. In response to the instruction for phase shift, operations of the mobile telephone **11**A and the watch-shaped information processing device **12**A shift to the link connection phase by the ACL link (step Se**24**).

[**0315**] After the ACL link is established, in order to notify a communication end, the mobile telephone **11**A sends ACL packets that includes a communication end notification (step Se**25**).

[**0316**] When the watch-shaped information processing device **12**A receives the above ACL packets (step Se**26**), it detects the communication end notification in the ACL packets. By detecting the communication end notification, the watch-shaped information processing device **12**A judges that communication with the mobile telephone **11**A has ended and shifts to the park mode which is described in step Se**2** (step Se**27**).

[**0317**] Playing operation of the caller's message is as follow. The user uses the mobile telephone **11**A to call to the service center **18**. Then the user carries out a predetermined operation procedure to hear the caller's message.

[**0318**] As described above, caller's messages can be stored and played as the second embodiment.

[**0319**] D. MODIFICATIONS OF FIRST, SECOND, AND THIRD EMBODIMENTS

[**0320**] (1) FIRST MODIFICATION

[**0321**] In the first embodiment, voice message asking waiting for a moment is sent from the mobile telephone to the caller. However, there are cases when the user cannot use the mobile telephone to answer the phone such as while driving. For these cases, the following configuration may be preferable.

[**0322**] First, encoded data for a response message of "I cannot answer the phone at the moment, please leave a message after the tone" is stored in an unshown nonvolatile memory of the mobile telephone **11**.

[**0323**] Then when there is an incoming call to the mobile telephone **11**, an incoming call notification signal is sent to the watch-shaped information processing device **12**. Then the watch-shaped information processing device **12** receives the incoming call notification signal. When a predetermined button operation is conducted on the watch-shaped information processing device **12**, it sends an message recording request. It is also possible to automatically send the message recording request by so configuring the watch-shaped information processing device **12**. Buttons may be used to set the watch-shaped information processing device **12**. In this case, on receiving the incoming call notification signal, or after a prescribed time period has passed, the message recording request is sent.

[**0324**] When the mobile telephone **11** receives the message recording request, it reads from the nonvolatile memory **33** the encoded data for the response message and sends to the caller. In response to this, if the caller sends a message, the mobile telephone **11** stores the message in a storage means such as an unshown RAM or in a message recording area in a nonvolatile memory.

[**0325**] (2) SECOND MODIFICATION

[**0326**] In the above first, second, and third embodiment, when there is an incoming call to the mobile telephone **11** or **11**A, the watch-shaped information processing device **12** or **12**A sends to the mobile telephone **11** or **11**A necessary information for the incoming call process. In addition to this, it is possible to modify the embodiment. In one possible modification, the mobile telephone **11** or **11**A intermittently makes a communication with the watch-shaped information processing device **12** or **12**A. When the mode of the mobile telephone **11** or **11**A shifts, it notifies the mode to the watch-shaped information processing device **12** or **12**A. Then the mode of the watch-shaped information ,processing device is shifted to the same mode.

[**0327**] As these modes, there are, for example, an incoming call sound generation mode for outputting sound when there is an incoming call, a vibration mode for producing vibration when there is an incoming call, a silent mode for not outputting sound when there is an incoming call, and other mode that is preferable under which both the mobile telephone and the watch-shaped information processing device are in the same mode.

[**0328**] For example, when the silent mode is set where the mobile telephone **11** does not output incoming signal sound and makes a communication in a predetermined interval of for example five minutes, the watch-shaped information processing device does not output an incoming call signal sound.

[**0329**] By this, it is possible to simplify the settings; thereby the operability is enhanced.

[**0330**] (3) THIRD MODIFICATION

[**0331**] In the above first, second, and third embodiment, it is possible to use the watch-shaped information processing device **12** or **12**A as a remote control device of the mobile telephone **11** or **11**A.

[**0332**] For example, by operating buttons on the external input unit **30** of the watch-shaped information processing device **12** or **12**A, instructions are sent to the mobile telephone **11** or **11**A, and the mobile telephone **11** or **11**A is shifted to silent mode.

[**0333**] In this case, after mode shift is completed, data that tells setting completion is sent from the mobile telephone **11** or **11**A to the watch-shaped information processing device **12** or **12**A. Then information for the setting completion is displayed on the display unit **29** of the watch-shaped information processing device **12** or **12**A. Hence, the user can know that there happens a setting change.

[**0334**] (4) FOURTH MODIFICATION

[**0335**] In the second embodiment, caller's messages are stored in the watch-shaped information processing device **12**A, and in the third embodiment, they are stored in the service center **18** on the mobile network **17**.

[**0336**] However, caller's messages may-be stored in the mobile telephone **11**A. In this case, the watch-shaped information processing device **12**A does not have the nonvolatile memory **33** and the address management table AMT for recording and playing caller's messages. On the other hand, the mobile telephone **11**A needs to have components for recording and playing caller's messages.

[0337] (5) FIFTH MODIFICATION

[0338] It is also possible to make a mobile telephone system with the mobile telephone **11**A (refer to **FIG. 7**) and the watch-shaped information processing device **12**A both of the second embodiment (refer to **FIG. 7**), and make the mobile telephone system perform the operation of the first embodiment. Namely, when there is an incoming call to the mobile telephone **11**A, the watch-shaped information processing device **12**A sends to the mobile telephone **11**A an instruction signal instead of sending voice message, the instruction makes the mobile telephone **11**A send voice message. When the mobile telephone **12**A receives the instruction, it makes call connection to the caller's telephone and sends to the caller's telephone voice message that asks the caller to wait for a moment. In order to achieve this, the mobile telephone **11**A has a nonvolatile memory **57** as shown in **FIG. 27** and stores encoded data of the voice message. When the mobile telephone **11**A receives the instruction, it reads the encoded data of the voice message in the nonvolatile memory **57** and sends it to the caller.

[0339] (6) SIXTH MODIFICATION

[0340] In the above explanation for the first, second, and third embodiments, when the mobile telephone **11** or **11**A has e-mail function or web page viewer function, a modification may be possible as follows. When there is e-mail message or during web page auto-browsing, data for the e-mail message or the web page is sent to the watch-shaped information processing device **12** or **12**A and is displayed on the display unit **29** of the watch-shaped information processing device **12** or **12**A. By this modification, the user can read e-mail message or see web page without taking the mobile telephone **11** or **11**A from his or her bag.

[0341] Explanation is given under an assumption that this modification is applied to the second embodiment.

[0342] First, explanation of e-mail is given.

[0343] An assumption is used here that there is a connection between the mobile telephone **11**A and the watch-shaped information processing device **12**A before accessing to a mail server.

[0344] First, on the display of the watch-shaped information processing device **12**A, screen image on the mobile telephone **11**A for connecting to the mail server is displayed. This is achieved by sending HTML data from the mobile telephone **11**A.

[0345] When the user presses a button on the display by using the external input unit **30**, the watch-shaped information processing device **12**A sends to the mobile telephone **11**A a button ID that is related to the pressed button. The mobile telephone **11**A receives the button ID, and generates an event for the pressed button ID to give to a user interface. The user interface is a software installed in the mobile telephone **11**A, and accepts the generated event by the operation of the input unit of the mobile telephone **11**A, and carries out the instructed process by the event. The user interface receives the event and then interprets it as instruction for mail receiving. Then the user interface. carries out processes for mail receiving based on post office protocol version **3** (POP**3**).

[0346] The mobile telephone **11**A makes the watch-shaped information processing device **12**A display list of the received e-mail messages on its display. It is possible to display a list that includes all the received e-mail message, instead of displaying a list that only includes newly-received e-mail messages.

[0347] When the user selects an e-mail message using the external input unit **30**, the watch-shaped information processing device **12**A sends data for this selecting operation to the mobile telephone **11**A via a connection link between them. When the mobile telephone **11**A receives data for the selecting operation, it generates event that is equivalent to an event to the mobile telephone **11**A. Thereby, it is possible to select and display an e-mail message.

[0348] **FIG. 28** shows a display screen after an e-mail message is selected. In **FIG. 28**, the user sees that an e-mail message, and title and part of the message.

[0349] Next, operation during viewing web page will be described.

[0350] An assumption is used here that there is a connection between the mobile telephone **11**A and the watch-shaped information processing device **12**A before accessing to a content server.

[0351] First, on the display of the watch-shaped information processing device **12**A, screen image on the mobile telephone **11**A for connecting to the content server is displayed. This is achieved by sending HTML data from the mobile telephone **11**A.

[0352] When the user presses a button on the display by using the external input unit **30**, the watch-shaped information processing device **12**A sends to the mobile telephone **11**A a button ID that is related to the pressed button. The mobile telephone **11**A receives the button ID, and generates an event for the pressed button ID to give to a user interface.

[0353] As a result, GET messages that specify uniform resource locator (URL) are sent from the mobile telephone **11**A. The get message is a message of Hyper Text Transfer Protocol (HTTP) and used to get a resource specified by the URL.

[0354] When the mobile telephone **11**A receives data of the web page specified by the URL from the content server, the mobile telephone **11**A sends the data to the watch-shaped information processing device **12**A.

[0355] The watch-shaped information processing device **12**A displays screen image for the data on its display. In more detail, as shown in **FIG. 29, a** web page is displayed.

[0356] When the user uses the external input unit **30** to press a button on the screen, the watch-shaped information processing device **12**A to the mobile telephone **11**A a button ID that is related to the pressed button. The mobile telephone **11**A receives the button ID, and generates an event for the pressed button ID to give to a user interface.

[0357] As a result, another GET message is sent from the mobile telephone **11**A, and the same processes are carried out.

[0358] (7) SEVENTH MODIFICATION

[0359] In the above explanation for the first, second, and third embodiments, another modification may be possible by which the user can perform a telephone communication by using the microphone **36** and the speaker **35** of the watch-

shaped information processing device **12** or **12A** as follows. When there is an incoming call to the mobile telephone **11** or **11A**, communication links between the caller's telephone and the mobile telephone **11** or **11A** and between the mobile telephone **11** or **11A** and the watch-shaped information processing device **12** or **12A** are established. Using the links, the user makes telephone conversation with the caller.

[**0360**] The steps for achieving the above are as follows.

[**0361**] The mobile telephone **11** receives an incoming call from the caller, and then sends to the watch-shaped information processing device **12** an incoming call notification signal.

[**0362**] In response to the signal, the watch-shaped information processing device **12** notifies the user of the incoming call. The user notices the notification, and uses the external input unit **30** to respond the incoming call. The central control circuit **25** of the watch-shaped information processing device **12** sends the mobile telephone **12** an answer for the incoming call and an instruction to establish a communication link between the mobile telephone **11** and the watch-shaped information processing device **12**.

[**0363**] As suggested by the instruction, the mobile telephone **11** forwards the answer for the incoming call to the radio base station **14**. The mobile telephone **11** also makes a telephone line with the caller's telephone and a communication line with the watch-shaped information processing device **12**.

[**0364**] By using them and the microphone **36** and the speaker **35** of the watch-shaped information processing device **12**, the user can make a telephone communication with the caller.

[**0365**] (8) EIGHTH MODIFICATION

[**0366**] In the explanation in the first, second, and third embodiments, only bluetooth is used for a method for bidirectional communication. However, it is possible to use other method if the method enables communication in a range of several tens of meters.

[**0367**] (9) NINTH MODIFICATION

[**0368**] In the above explanation for the first, second, and third embodiments, when there is an incoming call to the telephone **11** or **11A**, voice message for asking for leaving a message or for waiting for a moment is sent to the caller. However, information sent to the caller is not limited to these messages. For example, data of synthetic sound for melody, chime, or song of birds may be sent to the caller. Also, instead of sending voice, sending image or text information that asks the caller to wait for a moment or to leave a message may be possible.

[**0369**] (10) TENTH MODIFICATION

[**0370**] In the above explanation for the first, second, and third embodiments, watch-shaped information processing device is used as one example of the radio communication device. However, instead of shape of watch, ring-shaped, necklace-shaped, pendant-shaped and other wearable shape is possible.

[**0371**] (11) ELEVENTH MODIFICATION

[**0372**] In the above explanation for the first, second, and third embodiments, control programs for the mobile telephone and the watch-shaped information processing device are preinstalled in a ROM, a RAM, or a nonvolatile memory.

[**0373**] However, it is possible to carry out the present invention in the following way.

[**0374**] First, control programs for the mobile telephone or the watch-shaped information processing device of the above embodiments are recorded on storage media such as semiconductor memory, optical disc such as compact disc (CD), compact disc recordable (CD-R), digital versatile disk (DVD), DVD-recordable (DVD-R), DVD-Random Access Memory (DVD-RAM), magnetic optical disk such as Magneto-Optical (MO), Mini-Disk (MD), hard disk drive, or flexible disk. Then the media are distributed to users. The user who got the media installs the control program to the memory (flash ROM or RAM) of the mobile telephone or the watch-shaped information processing device by using an appropriate drive device. Then the micro processor unit (MPU) of the mobile telephone or the watch-shaped information processing device operates according to the control program installed in its memory.

[**0375**] Also, it is possible to distribute the control program to users of the mobile telephone or the watch-shaped information processing device through network such as the Internet, a private line (wireless or wired), public circuit (wireless or wired). The user who got the control program installs the control program to the memory (flash ROM or RAM) of the mobile telephone or the watch-shaped information processing device by using an appropriate drive device. Then the MPU of the mobile telephone or the watch-shaped information processing device operates according to the control program installed in its memory.

[**0376**] E. FOURTH EMBODIMENT

[**0377**] A system is being studied to perform various data communication between several electronic devices by connecting them through bidirectional radio links to form a wireless network. By this system, for example, image data taken by a digital camera is transmitted to a personal computer and stored in it. The image data also is transmitted to a printer from the personal computer to print. As electronic devices, portable devices are possible. Also, a radio system such as bluetooth may be used for this system. However, the bluetooth radio system enables radio communication within a range of only about ten meters (in class two of bluetooth specification). Therefore, radio communication link may be cut off depending on the location of the user of the bluetooth unit. In that case, the user has to reestablish a radio communication link, which is a troublesome operation for the user. Hence, it is very useful if the user can know the state of the radio communication link and avoid the cut-off of the radio communication link. However, there is no means for the user to know the state of the radio communication link and it is impossible to avoid cut-off of the radio communication link.

[**0378**] The fourth embodiment is to make it possible to notify a user of state of the bidirectional radio communication between the electronic devices.

[**0379**] **FIG. 30** shows a configuration of a radio communication system of the fourth embodiment. This system as shown in **FIG. 30** has a watch-shaped information processing device **1**, a mobile telephone **2**, an MPEG **1** audio layer

3 (MP3) player 3, a notebook computer 4, a personal digital assistants (PDA) 5, and a digital camera 6, and other portable devices.

[0380] Each of the devices 1 to 6 has a function of bidirectional radio communication that is based on the bluetooth specification within a range of about ten meters (hereinafter the function is referred to as a bluetooth communication). The devices 1 to 6 form a network called piconet, exchange various information using a frequency band of 2.45 GHz, and perform various application software.

[0381] According to the bluetooth specification, the piconet can have a master unit and up to seven slave units.

[0382] In **FIG. 30**, the watch-shaped information processing device 1 is a master unit and the portable device 2 to 6 are slave units. In the fourth embodiment, explanation will be given using this relation in **FIG. 30**. Also, in the following explanation, device with a bluetooth communication function is referred to as a bluetooth unit.

[0383] In the above system, the watch-shaped information processing device 1 has a function that can detect a state shift from communication-able to communication-disable between the watch-shaped information processing device 1 and the portable devices 2 to 6 and can notify the user of a current communication state.

[0384] In more detail, if state of the communication between the watch-shaped information processing device 1 and the portable devices 2 to 6 change from an excellent quality shown in **FIG. 31A** to a bad quality shown in **FIG. 31B**. This quality decline can be because one of the communicating devices has gone outside of the communication area.

[0385] The watch-shaped information processing device 1 detects this state change and notifies the user the current communication state.

[0386] From here, explanation will be given in detail of a configuration for achieving this function.

[0387] **FIG. 32** shows a configuration of a mobile telephone 2. Other portable devices 2 to 6 have the same configuration as the mobile telephone 2 for bluetooth communication.

[0388] A bluetooth module **2022** of the mobile telephone 2 makes a bluetooth communication with other bluetooth units through an antenna **2021** for bluetooth.

[0389] A central control circuit **2023** controls entire units of the mobile telephone 2.

[0390] A user interface unit **2025** receives various users'operations and notifies the user of various information under a control of the central control circuit **2025**.

[0391] A radio communication device **2027** performs a radio communication with an unshown radio base station of the mobile network via an antenna **2026** for telephone.

[0392] A voice processing unit **2028** carries out a predetermined processing on signals output from the radio communication device **2027** to output voice signal to a speaker **29**. The voice processing unit **2028** outputs signals for voice signal input form a microphone **2030** to the radio communication device **2027**.

[0393] A battery **2031** supplies power to components enclosed by a dotted line in **FIG. 32**.

[0394] A switching circuit **2032** switches a line connected to the battery**2031** between connection and cut-off.

[0395] An RF unit **221** of the bluetooth module **2022** performs high frequency signal processing such as amplifying high frequency signal and performs bidirectional communication with other bluetooth unit.

[0396] A baseband processing unit **222** modulates/demodulates baseband signals based on bluetooth technique.

[0397] Also, the bluetooth module **2022** has a flash memory, a voltage regulator, a quartz oscillator, and other peripherals (all not shown). The configuration of this bluetooth module is already known.

[0398] The flash memory of the bluetooth module **2022** stores various necessary information for bluetooth radio communication such as a bluetooth device address, a link key, and an encryption key. The bluetooth device address is used for identifying other bluetooth devices. The link key is used for authorizing radio communication when starting it. The encryption key is used for encrypted communication.

[0399] The central control circuit **2023** is equipped with a central processing unit (CPU), a read only memory (ROM), and a random access memory (RAM) connected on a bus, all not shown in the figure. The ROM stores various control programs. The CPU reads the control programs and carries out various processing operations. The RAM is used as a work area of the CPU.

[0400] A display unit **251** of the user interface **2025** is equipped with a liquid crystal display or an organic electroluminescence display, and displays various information.

[0401] A light emitting unit **252** has an LED or other light emitting device, and emits to notify the user of states of the device.

[0402] An electronic sound unit **253** is a device that produces electronic sound or buzzer sound to notify the user of states of the device.

[0403] A vibrator **254** vibrates to notify the user of states of the device.

[0404] An external input unit **255** is equipped with various operation keys, an operation stick, a touch panel, and a jog dial, and operated by the user.

[0405] Under a control of the central control circuit **2023**, a drive circuit **256** drives the display unit **251**, a drive circuit **257** the light emitting unit **252**, a drive circuit **258** the electronic sound unit **253**, a drive circuit **259** drives the vibrator **254**.

[0406] An RF unit **271** of the radio communication device **2027** performs high frequency signal processing such as amplifying high frequency signal and performs radio communication with the radio base station via the antenna **2026** for telephone. A baseband controller **272** modulates/demodulates baseband signals.

[0407] A voice codec **281** of the voice processing unit **2028** decodes the output signal of the base band controller **272** to output voice data. The voice codec **281** encodes the

voice data that is output from a voice interface unit which is later described, then output it to the base band controller **272**.

[**0408**] A voice interface unit **282** of the voice processing unit **2028** conducts digital to-analog conversion on voice data output from the voice codec **281** into analog voice signal, then the speaker **202** outputs voice. The voice interface unit **282** conducts analog-to-digital conversion on analog signal input from the microphone **2030** into voice data to output to the voice codec **281**.

[**0409**] As a result, the user can make a telephone communication with other people by using the speaker **2029** and the microphone **2030**.

[**0410**] Based on a switching control signal provided from the CPU **2023** and on an operation the user conducts on the external input unit **255**, a switching circuit **2032** carries out switching operation between connection and cut-off of the power supply.

[**0411**] As described, the mobile telephone **2** has a configuration for telephone function and and for bluetooth communication used for communication with other bluetooth unit.

[**0412**] The portable devices **2** to **6** have these configurations in common. Namely, every portable device **2** to **6** can perform its own function and bluetooth communication.

[**0413**] Therefore, from the description for the mobile telephone **2**, configuration of portable devices other than mobile telephone **2** is easily conceivable. So explanations for them will not be given.

[**0414**] **FIG. 33** shows a configuration of a watch-shaped information processing device **1**.

[**0415**] A bluetooth module **1012** of the watch-shaped information processing device **1** carries out bluetooth radio communication with the mobile telephone **2** via an antenna **1011**.

[**0416**] A central control circuit **1023** controls entire units of the watch-shaped information processing device **1**.

[**0417**] A quartz oscillator **1014** generates a source oscillation signal having a reference frequency.

[**0418**] A user interface unit **1015** receives various users'operations and notifies the user of various information.

[**0419**] A battery **1016** supplies power to components enclosed by a dotted line in **FIG. 33**.

[**0420**] An RF unit **122** of the radio communication device **1012** controls a switching circuit **121** that is connected to an antenna **1011** and conducts bidirectional radio communication via the antenna **1011**.

[**0421**] A baseband controller **123** modulates/demodulates baseband signals.

[**0422**] A quartz oscillator **124** generates a source oscillation signal having a reference frequency.

[**0423**] The bluetooth module **1012** also has unshown flash memory and a voltage regulator and other components.

[**0424**] A communication quality monitoring unit **125** of the base band controller **123** monitors quality of bluetooth communication.

[**0425**] The communication quality monitoring unit **125** has a count table **126** and monitors communication quality of the bluetooth communication with the portable device **2** to **6**. Based on this monitoring, the communication quality monitoring unit **125** increases count number of the count table **126** depending on a degree of quality degradation of bluetooth communication. When quality of bluetooth communication recovers, the count number of the count table **126** is cleared.

[**0426**] An unshown flash memory stores various necessary information such as a bluetooth device address, a link key, and an encryption key as with the case of the flash memory of the mobile telephone **2**.

[**0427**] In a ROM **132** of the central control circuit **1013**, various control programs are stored.

[**0428**] A CPU **131** reads the control programs from the ROM **132** and carries out various control processing.

[**0429**] A RAM **133** is used as a work area of the CPU **131** and stores a notification table **134** for managing information, the information being to decide what kind of notification is made to the user depending on the communication state with other bluetooth unit.

[**0430**] A display unit **151** of the user interface **1025** is equipped with a liquid crystal display or an organic electroluminescence display, and displays various information.

[**0431**] A light emitting unit **152** has an LED or other light emitting device, and emits light to notify the user of states of the device.

[**0432**] An electronic sound unit **153** is a device that produces electronic sound or buzzer sound to notify the user of states of the device.

[**0433**] A vibrator **154** vibrates to notify the user of states of the device.

[**0434**] An external input unit **155** is equipped with various operation keys, an operation stick, a touch panel, and a jog dial, and operated by the user.

[**0435**] Under a control of the central control circuit **1013**, a drive circuit **156** drives the display unit **151**, a drive circuit **157** the light emitting unit **152**, a drive circuit **158** the electronic sound unit **153**, a drive circuit **159** drives the vibrator **154**.

[**0436**] Next, quality monitoring method for bluetooth communication of the fourth embodiment will be described.

[**0437**] Master unit and slave units form a piconet through a synchronization establishment phase and a link connection phase, both phases are defined in the bluetooth specification. Then, depending on the circumstance, operational modes of the master unit and the slave unit shift to a low power consumption mode called a sniff mode. During the mode shifting, several processes are conducted in a master unit and a slave unit using a bluetooth device address and a link key.

[**0438**] While shifting to the sniff mode, the master unit tells to the slave unit a cycle of inquiry signal transmission (referred to as inquiry signal cycle from here). After shifting to the sniff mode, the master sends to the slave unit the inquiry signal based on the inquiry signal cycle.

[0439] When the slave unit receives the inquiry signal, it sends to the master unit an inquiry reply signal in response to the inquiry signal.

[0440] **FIG. 34** is a timing chart showing the above signal exchanging of inquiry signal and the inquiry reply signal. In **FIG. 34**, the master unit specifies a slave unit and sends the inquiry signal (in the figure, the signal is crosshatched) to it at each inquiry signal cycle. Each slave unit receives the inquiry signal at each time slot.

[0441] In response to the inquiry signal, the slave units **1** and **2** send an inquiry response signal (in the figure, signal is hatched) to the master unit. The inquiry signal and the inquiry response signal have bluetooth device addresses of the transmission side and the receiving side.

[0442] As described above, in the sniff mode, the master unit and the slave unit exchange the inquiry signal and the inquiry response signal. By this, the master unit sends various instructions to the slave unit, and the slave unit sends various requests to the master unit. The slave unit also carries out synchronization correction.

[0443] Communication quality monitoring method of the fourth embodiment is based on the above explained technology, and will be described in detail below.

[0444] As shown in a format chart of **FIG. 35**, the count table **126** stores a list that tells the number of failures of receiving the inquiry response signal from the portable devices **2** to **6**. In the list, the number of failures and the bluetooth device addresses of the portable devices **2** to **6** are associated. When the communication quality monitoring unit **125** of the watch-shaped information processing device **1** does not receives any inquiry response signal from a slave unit in a slot defined by the inquiry signal cycle, the watch-shaped information processing device **1** judges that it fails to receive an inquiry response signal from the slave unit. Then the watch-shaped information processing device **1** adds one to the number of failures of receiving the inquiry response signal of the slave unit.

[0445] This addition of one is for counting the number of successively failures of receiving the inquiry response signal. Therefore, even one success of receiving the inquiry response signal from the slave unit clears the counted number of failures for the slave unit.

[0446] Next, the notification table **134** stored in the RAM **133** of the watch-shaped information processing device **1** will be described.

[0447] **FIG. 36** is a format chart that shows one example of the notification table **134**. As shown in **FIG. 36**, the notification table **134** stores various information of the portable device **2** to **6** by using the bluetooth device addresses of them.

[0448] As various information, there are for example device name, communication quality flag, power off flag, notification requirement flag, notification device for caution, and notification device for NG.

[0449] The content of these information will be described in detail.

[0450] The device name is a name of the portable device **2** to **6** input by the user. When notifying the communication state, these device names are used. In more detail, these device names are displayed o the display unit **151**.

[0451] The communication quality flag is a flag that shows the state of the communication with the portable device **2** to **6**. These states of communication is judged based on bluetooth communication quality with the portable devices **2** to **6**. In the fourth embodiment, three communication qualities are used, an "OK" that tells communication quality is fine, a "caution" that tells communication quality is declining, and an "NG" that tells communication is impossible. "OK", "caution", and "NG" of the communication quality is judged based on the number of failures of receiving the inquiry response signal stored in the count table **126**. In the fourth embodiment, when the number of the failures of receiving the inquiry response signal is **0** to **2**, the communication quality is judged to be "OK". When the number of the failures of receiving the inquiry response signal is **3** to **4**, the communication quality is judged to be "caution". When the number of the failures of receiving the inquiry response signal is more than **4**, the communication quality is judged to be "NG".

[0452] In the notification table **134** in **FIG. 36**, "1" means flag ON and "0" means flag OFF.

[0453] The power off flag becomes ON when the user shuts off the power of the portable devices **2** to **6**.

[0454] After any portable device **2** to **6** is shut off, it cannot send back to the watch-shaped information processing device **1** an inquiry response signal. Also the watch-shaped information processing device **1** cannot receive any inquiry response signal from the portable devices **2** to **6**, so it makes a judgement that the quality of bluetooth communication has declined or bluetooth communication becomes impossible and notifies the user of communication state.

[0455] However, because the user him/herself shuts off the power, notifying the user of the power off the portable device and of the state of the communication of the portable device that is power off is not considered to be necessary. Therefore, the watch-shaped information processing device **1** sets power off flag on the portable device that is powered off. When quality of the bluetooth communication with the powered off portable device has declined or the bluetooth communication becomes impossible, the watch-shaped information processing device **1** does not notify the user.

[0456] The power off flag is turned on in response to a power off signal sent from the portable devices **2** to **6** when they are turned off.

[0457] The notification requirement flag is a flag that is set on/off depending on requirement of notification of communication state when bluetooth communication quality has declined or bluetooth communication becomes impossible. That is, if notification is conducted every time when the communication quality has declined or the communication becomes impossible, there will be lots of notification, which may be annoying to the user. The notification requirement flag is for this situation. The user sets on/off of the notification requirement flag of the portable device **2** to **6**, and based on the set flag, the watch-shaped information processing device **1** carries out notification.

[0458] The notification device for caution and notification device for NG tell what unit should be used when judged to

be "caution" or "NG", the display unit **151**, the light emitting unit **152**, the electronic sound unit **153**, or the vibrator **154**. That is, notification is conducted by using the unit whose flag is set ON.

[**0459**] The settings of the notification device for caution and notification device for NG may be made by the user or may be preset before shipment.

[**0460**] In **FIG. 36, a** notebook personal computer **4** with a bluetooth device address "ad0001" has a state "OK" for bluetooth communication with the watch-shaped information processing device **1** and therefore is considered to be making a fine bluetooth communication.

[**0461**] The power off flag for the notebook personal computer **4** is set off. Therefore the personal computer is powered on at the moment.

[**0462**] Also the notification requirement flag is set on, which tells that notification have to be carried out when the communication quality has declined or the communication becomes impossible. In this case, when the communication quality is judged to be "caution", notification is made by using the display unit **151** and the vibrator **154**, and when the communication quality is judged to be "NG", notification is made by using all the display unit **151**, the light emitting unit **152**, the electronic sound unit **153**, and the vibrator **154**.

[**0463**] Next, operations of the fourth embodiment will be described. Hereinafter, explanation will be given in an order from

[**0464**] (1) Updating process of the notification table **134** by the watch-shaped information processing device **1**

[**0465**] (2) Operation while shutting off portable device

[**0466**] (3) Notification process of communication state by the watch-shaped information processing device **1**

[**0467**] (4) Operation of the system.

[**0468**] (1) Updating process of the notification table **134** by the watch-shaped information processing device **1**

[**0469**] **FIG. 37** is a flowchart that shows an updating process of the communication quality flag on the notification table **134** by the central control circuit **1013**. The central control circuit **1013** conducts time keeping based on the source oscillation signal output by the quartz oscillator **1014**, and makes a judgement whether a time has come for reading count table **126** in the communication quality monitoring unit **125** (step Sf**1**).

[**0470**] When it is time for reading (step Sf**1** Yes), the central control circuit **1013** sees the count table **126** and reads all the counted value stored in the count table **126** (step Sf**2**).

[**0471**] Then the central control circuit **1013** makes a judgement on communication quality based on the readout counted value and aforementioned judgement conditions. Based on the judgement, the central control circuit **1013** sets the communication quality flag on the notification table **134** (step Sf**3**). In **FIG. 35**, the number of failures of receiving the inquiry response signal for the bluetooth device address "ad**0003**" is **5**, so the communication quality is judged to be "NG" . Therefore, the communication quality flag for the bluetooth device address "ad0003" on the notification table **134** in **FIG. 36** is set "NG".

[**0472**] These steps Sf**1** to Sf**3** are repeated to keep the communication quality flag updated.

[**0473**] (2) Operation while shutting off portable device.

[**0474**] With reference to the sequence chart in **FIG. 38**, operation while shutting off the mobile devices **2** to **6** will be described.

[**0475**] The watch-shaped information processing device **1** and the mobile telephone **2** form a piconet via synchronization establishment phase and link connection phase defined by the bluetooth technique (step Sg**1**). Then the watch-shaped information processing device **1** shifts to the sniff mode (step Sg**2**).

[**0476**] During this sniff mode, for example, when the user of the mobile telephone **2** shuts off the mobile telephone **2** by using the external input unit **255**. The central control circuit **2023** accepts this operation (step Sg**3**).

[**0477**] The central control circuit **2023** of the mobile telephone **2** sends request in a inquiry response signal. The request is for shifting from the sniff mode to the link connection phase by the ACL link. In response to the request for shifting, connection between the mobile telephone **2** and the watch-shaped information processing device **1** shifts to a link connection phase by the ACL link (step Sg**4**). Here, the ACL link is an asynchronous packet switched communication link by the bluetooth technique.

[**0478**] When the ACL link is established, the mobile telephone **2** sends a power off signal that tells there is a shutting off operation as an ACL packets (step Sg**5**). The ACL packets has bluetooth device address "ad**0003**" of the mobile telephone **2**.

[**0479**] The watch-shaped information processing device **1** receives the ACL packets, and detects that there is a shutting off operation on the mobile telephone **2** (step Sg**6**). Then the watch-shaped information processing device **1** sends ACL packets that has a response signal (step Sg**7**).

[**0480**] The mobile telephone **2** receives the ACL packets (step Sg**8**), and confirms that notification of shutting off is made to the watch-shaped information processing device **1**.

[**0481**] The watch-shaped information processing device **1** extracts the bluetooth device address "ad**0003**" from the received ACL packets. Then the watch-shaped information processing device **1** sets the power off flag for the bluetooth device address "ad**0003**" ON in the notification table **134** shown in **FIG. 36** (step Sg**9**).

[**0482**] Then the communication link between the mobile telephone **2** and the watch-shaped information processing device **1** is cut off (step Sg**10**).

[**0483**] The central control circuit **2023** of the mobile telephone **2** sends a switching control signal to the switching circuit **2032** to shut off the power (step Sg**11**).

[**0484**] (3) Notification process of communication state by the watch-shaped information processing device **1**.

[**0485**] **FIG. 39** is a flowchart showing operations when the central control circuit **1013** of the watch-shaped information processing device **1** carries out notification of the communication state.

[0486] In **FIG. 39**, the central control circuit **1013** counts time based on the source oscillation signal output by the quartz oscillator **1014**, and makes a judgement if it is time to read the notification table **134** in the RAM **133** (step Sh**1**).

[0487] When it is time for reading (step Sh**1** Yes), the central control circuit **1013** sees the notification table **134** in the RAM **133** (step Sh**2**).

[0488] The central control circuit **1013** makes a judgement whether or not to carry out notification based on the communication quality flag stored on the notification table **134** (step Sh**3**). For example, when the central control circuit **1013** sees the notification table **134** shown in **FIG. 36**, it makes a judgement that it needs to conduct a notification operation for the mobile telephone **2** because the communication quality flag is set ON to the "NG" part (step Sh**3** Yes).

[0489] Then the central control circuit **1013** sees the notification device for NG on the notification table **134** and carries out a notification operation (step Sh**4**). As shown in the notification table **134** in **FIG. 36**, the central control circuit **1013** controls all the drive circuits **156** to **159** to use all the display unit **151**, the light emitting unit **152**, the electronic sound unit **153**, and the vibrator **154** to conduct notification. When, at step Sh**3**, judgement is made that "caution" notification is necessary, the central control circuit **1013** uses notification device defined as notification device for caution in the notification table **134**.

[0490] This notification is repeated until a prescribed time period has passed or the user operates to stop it. When the prescribed time period has passed or the user operates to stop it, the process in **FIG. 39** returns to step Sh**1**.

[0491] When a judgement is made that there is no need of notification (step Sh**3** No), the process in **FIG. 39** returns to step Sh**1**.

[0492] (4) Operation of the system

[0493] Referring to the sequence chart in **FIG. 40** and using the watch-shaped information processing device **1** and the mobile telephone **2** as examples, operation of the system will be described. In **FIG. 40**, the watch-shaped information processing device **1** and the mobile telephone **2** form a piconet via synchronization establishment phase and link connection phase (step Si**1**). Then the watch-shaped information processing device **1** shifts to the sniff mode (step Si**2**).

[0494] During this sniff mode, when the inquiry signal cycle has come, the master unit that is the watch-shaped information processing device **1** sends an inquiry signal to the slave unit that is the mobile telephone **2** (step Si**3**). The mobile telephone **2** receives the inquiry signal (step Si**4**).

[0495] The mobile telephone **2** sends an inquiry response signal to the watch-shaped information processing device **1** (step Si**5**). The watch-shaped information processing device **1** receives the inquiry response signal (step Si**6**).

[0496] Similar processing as steps Si**3** to Si**6** are carried out in each inquiry signal cycle (steps Si**7** to Si**10**). During this steps, as shown in **FIG. 41**, date, month, day of the week, and a current time are displayed on the display unit **151** of the watch-shaped information processing device **1**.

[0497] Here, explanation is given assuming that the user of the watch-shaped information processing device **1** moves and the watch-shaped information processing device **1** is located outside communication area of the mobile telephone **2**.

[0498] In this case, when the watch-shaped information processing device **1** sends an inquiry signal to the mobile telephone **2** (step Si**11**), the mobile telephone **2** cannot receive the inquiry signal. As a result, the mobile telephone s cannot sends an inquiry response signal to the watch-shaped information processing device **1**. Therefore, on the count table **126** of the watch-shaped information processing device **1**, each time when inquiry signal cycle comes, the number of failures of receiving the inquiry response signal for the mobile telephone **2** is increased by one.

[0499] When this happens three times (steps Si**11** to Si**13**), counted value for the number of failures of receiving the inquiry response signal for the mobile telephone **2** becomes three.

[0500] Also as described above, the watch-shaped information processing device **1** repeats notification table updating process shown in **FIG. 37**. Therefore, when the watch-shaped information processing device **1** detects that the number of failures of receiving the inquiry response signal on the count table **126**, it sets the flag of caution of communication quality of the mobile telephone **2** to ON.

[0501] The watch-shaped information processing device **1** at the same time carries out a notification processes shown in a flow chart in **FIG. 39**. When the watch-shaped information processing device **1** detects that the communication quality flag for "caution" on the notification table **134** is set ON, the watch-shaped information processing device **1** makes a judgement that notification is necessary. Then the watch-shaped information processing device **1** conducts a notification using notification device for caution defined in the notification table **134** (step Si**14**). In more detail, as shown in the notification table **134**, the watch-shaped information processing device **1** uses the display unit **151** and the light emitting unit **152** as devices for caution.

[0502] During this notification, date, month, the day of the week, a current time, and a message "mobile phone CAUTION" are displayed on the display unit **151** of the watch-shaped information processing device **1** as shown in **FIG. 42**. At the same time, the light emitting unit **152** makes a notification by such as blinking.

[0503] When the watch-shaped information processing device **1** fails to receive two inquiry response signals in a row from the mobile telephone **2** (step Si**15** to Si**16**), the counted value of the number of failures of receiving the inquiry response signal becomes **5**.

[0504] By this, the watch-shaped information processing device **1** detects that the counted value of the number of failures of receiving the inquiry response signal on the count table **126** becomes **5**. Therefore, the watch-shaped information processing device **1** sets the "NG" part of the communication quality of the mobile telephone **2** to ON on the notification table **134**.

[0505] When the watch-shaped information processing device **1** detects that the "NG" part of the communication

quality of the mobile telephone **2** is set ON, the watch-shaped information processing device **1** judges that the notification is necessary.

[**0506**] Then the watch-shaped information processing device **1** conducts a notification using notification device for NG defined in the notification table **134** (step Si**17**).

[**0507**] In more detail, as shown in the notification table **134**, the watch-shaped information processing device **1** uses all the display unit **151**, the light emitting unit **152**, the electronic sound unit **153**, and the vibrator **154** as devices for NG. During this notification, date, month, the day of the week, a current time, and a message "mobile phone LOST" are displayed on the display unit **151** of the watch-shaped information processing device **1** as shown in **FIG. 43**. At the same time, the light emitting unit **152** makes a notification by such as blinking, the electronic sound unit **153** outputs prescribed buzzer sound or electronic sound, and the vibrator **154** repeats vibrations.

[**0508**] These notification operations are repeated until a prescribed time period has passed or the user operates to stop the notification.

[**0509**] As described above, according to the fourth embodiment, the watch-shaped information processing device **1** makes a judgement for quality of bluetooth communication with the portable devices **2** to **6**. When the quality has declined or the communication becomes. impossible, the watch-shaped information processing device **1** makes a notification to the user. Therefore, the user can easily know when the communication link seems to be cut off or when the communication link with the portable devices **2** to **6** are actually cut off.

[**0510**] Therefore, when communication link seems to be cut off, the user can move to other place or moves the portable device to other place to keep a fine bluetooth communication.

[**0511**] Also the watch-shaped information processing device **1** makes a judgement on communication quality for each portable device **2** to **6**, and conducts a notification operation. Therefore, the user can know the state of communication quality for each portable device **2** to **6**.

[**0512**] The fourth embodiment may also be applied to a lost property notification system for the portable devices **2** to **6**.

[**0513**] Recently, portable devices have become compact and are likely to be left in a house or an office when leaving there. When the fourth embodiment is applied to as a lost property system and the user of the watch-shaped information processing device **1** moves from the portable device **2** to **6** at a certain distance, a notification operation is carried out depending on the decline of the communication quality. Hence, the user can notice he or she leaves the portable devices **2** to **6**.

[**0514**] F. MODIFICATIONS OF THE FOURTH EMBODIMENT

[**0515**] (1) ALLOCATING MASTER AND SLAVE

[**0516**] In the fourth embodiment, in order to simplify the explanation, the watch-shaped information processing device **1** works as a master and other mobile devices **2** to **6** work as slaves in the piconet. However, it is possible to freely allocate master and slave function to any of the devices.

[**0517**] **FIG. 44** shows piconets of the portable devices **1** to **6**. In **FIG. 44**, the watch shaped information processing device **1** is a master unit and a mobile telephone **2**, an MP **3** player **3**, and a digital camera **6** are slave units, and they form a piconet PN**1**. A PDA **5** is a master unit and the watch-shaped information processing device **1** and another bluetooth unit **7** are slave units, and they form a piconet PN**2**. A notebook personal computer **4** is a master unit and the- watch-shaped information processing device **1** is a slave unit, and they form a piconet PN**3**.

[**0518**] According to the bluetooth specification, one bluetooth unit can become a master unit in one piconet and can at the same time become a slave unit in another piconet. In **FIG. 44**, the watch-shaped information processing device **1** is a master unit in the piconet PN**1** and a slave unit in the piconets PN**2** and PN**3**.

[**0519**] In **FIG. 44**, arrows in solid lines tell directions of transmission of inquiry signals and arrows in dotted lines tell directions of transmission of inquiry response signals. For example, the watch-shaped information processing device **1** receives inquiry signal from the notebook personal computer **4** and a PDA**5** and inquiry response signal from the mobile telephone **2**, the MP **3** player **3**, and the digital camera **6**. Each inquiry signal cycle for the inquiry signal and the inquiry response signal is determined in each link between the watch-shaped information processing device **1** and each of the portable devices **2** to **6**. Therefore, as described above, the number of failures of receiving the inquiry signal or the inquiry response signal can be counted. In this case, in the count table **126** shown in **FIG. 35**, counted values of the number of failures of receiving the inquiry signal or the inquiry response signal are stored.

[**0520**] (2) Judging criteria for communication quality

[**0521**] In the fourth embodiment, when the, when the number of the failures of receiving the inquiry response signal is **0** to **2**, the communication quality is judged to be "OK". When the number of the failures of receiving the inquiry response signal is **3** to **4**, the communication quality is judged to be "caution". When the number of the failures of receiving the inquiry response signal is more than **4**, the communication quality is judged to be "NG".

[**0522**] However, these judging criteria are not limited to the above, and designers or users of the devices may decide them.

[**0523**] Also, judging criteria for communication quality may be based on strength of received signal instead of the number of failures of receiving the signals.

[**0524**] (3) Conflict of notification target

[**0525**] In the explanation given using **FIG. 36**, only mobile telephone **2** has ON flag on "Caution" or "NG" part of the communication quality. Therefore, the watch-shaped information processing device **1** carries out a notification operation only to the mobile telephone **2** by following a sequence chart shown in **FIG. 40**.

[**0526**] However, there are cases where more than one portable devices are notification targets. In such one case, for

example, in addition to the ON flag on "NG" part of the communication quality for the mobile telephone **2** shown in **FIG. 36**, the PDA **5** has ON flag on "Caution" part of the communication quality.

[**0527**] In the above case, it is possible to preset an order of priority for notification target and make a notification based on this order. For example, when the notebook personal computer has an order of **1**, the PDA has an order of **2**, the mobile telephone has an order of **3**, the MP **3** player has an order of **4**, and the digital camera has an order of **5**, notification for the PDA is carried out prior to the mobile telephone.

[**0528**] These orders of priority may be set at any time by the user, or may be set based on the number of bluetooth communications.

[**0529**] Also, notification operation may be carried out in the order of the priority for a predetermined time period. For example, if the orders of priority are set as described above, notification for the PDA **5** is first carried out for five seconds, then notification for the mobile telephone is carried out for five seconds. This time period may be preset before shipment or set by the user.

[**0530**] These orders do not always have to have different number, and may have the same order of priority. For the devices with the same order of priority, notification may be carried out in an arbitrary order.

[**0531**] Also, the display unit **151**, the light emitting unit **152**, the electronic sound unit **153**, and the vibrator **154** may be associated with the notification target. For example, the display unit **151** is associated with the mobile telephone **2**. The light emitting unit **152** is associated with the notebook personal computer **4**. The electronic sound unit **153** is associated with the PDA. The vibrator **154** is associated with the MP **3** player **3**. In this case, notification operations for the mobile telephone **2** by the display unit **151** and for the PDA **5** by the electronic sound unit **153** may be carried out at the same time.

[**0532**] (4) Notification devices

[**0533**] In the fourth embodiment, based on "NG" and "Caution" for the communication quality for each portable device **2** to **6**, notification operation is carried out by using other combination of notification device for each device.

[**0534**] However, it is possible to use the same notification device and change notification method for each portable device **2** to **6**. For example, when conducting notification operation by using the electronic sound unit **153**, different melodies may be used for each portable device **2** to **6**. Also, different blinking pattern may be used for the light emitting unit **152**, and different vibration pattern may be used for the vibrator **154**.

[**0535**] (5) Method of radio communication

[**0536**] In the above explanation, only the bluetooth is used for a method for bidirectional communication. However, it is possible to use other method if the method enables communication in a range of several tens of meters.

[**0537**] (6) Watch-shaped information processing device

[**0538**] In the above explanation, a wristwatch-shaped information processing device is used as one example of the device that notifies the communication state. However, the term watch is used for wristwatch in this specification, drawings, and claims. Also, instead of shape of watch, shape of ring, shape of necklace, shape of pendant and other wearable shapes are possible. These wearable devices are also preferable for a notification system of lost property.

[**0539**] Also, devices that notify the state of the communication are not limited to wearable devices. They can be just a portable device or a stationary device.

[**0540**] In the explanation of the fourth embodiment, one device (watch-shaped information processing device **1**) in the piconet carries out notification operation. However, it is possible to install the unit that performs the notification operation to every mobile device **2** to **6**.

[**0541**] In the fourth embodiment, as shown in **FIG. 41**, day, the day of the week, and a current time is displayed on the display unit **151** of the watch-shaped information processing device. However, if the mobile telephone has an e-mail function and a web-page viewer function, it is possible to set the mobile telephone or the watch-shaped information processing device to display an e-mail message when it comes or a web-page when time comes for auto-browsing.

[**0542**] (7) Control programs

[**0543**] In the fourth embodiment, control programs are preinstalled in a ROM, a RAM, or a nonvolatile memory.

[**0544**] However, similar to the first, second, and third embodiments, in the fourth embodiment the control programs for the mobile telephone or the watch-shaped information processing device may be recorded in a computer readable storage media first, and then the storage media may be distributed to users. Also, such a program can be distributed through a telecommunication line.

1. A radio communication device comprising:

a transmitter-receiver unit that carries out local and bidirectional communication with a mobile telephone;

an incoming call notification unit that, when the radio communication device receives from the mobile telephone an incoming call notification signal that indicates that there is an incoming call to the mobile telephone, carries out a notification; and

a control unit that, by using the transmitter-receiver unit, sends, in response to the incoming call, an instruction signal to the mobile telephone to make the mobile telephone respond to the caller by using voice.

2. A radio communication device of claim 1, further comprising an external input unit;

wherein the control unit, in response to an operation to the external input unit, sends an instruction signal to make the mobile telephone conduct operations for the incoming call.

3. A radio communication device of claim 1, further comprising an external input unit;

wherein the control unit, when a prescribed time period has passed without any operation to the external input terminal after the notification of the incoming call is

carried out, sends an instruction signal to make the mobile telephone conduct operations for the incoming call.

4. A radio communication device of claim 1:

wherein the control unit, when an incoming call auto-response mode is preset to the radio communication device and the radio communication device receives the incoming call notification signal, sends an instruction signal to make the mobile telephone conduct operations for the incoming call.

5. A radio communication device of claim 1, further comprising a display;

wherein the control unit, when there is a telephone number, a mobile telephone identification information, or a caller identification signal of the mobile telephone in the incoming call notification signal received by the mobile telephone, displays them on the display.

6. A radio communication device of claim **5**:

wherein the control unit, by using the transmitter-receiver unit, sends to the mobile telephone, as the instruction signal, a signal that instructs the mobile telephone to send to the caller a message that asks the caller to wait for a moment.

7. A radio communication device of claim **5**:

wherein the control unit, by using the transmitter-receiver unit, sends to the mobile telephone, as the instruction signal, a signal that instructs the mobile telephone to send to the caller a message that asks the caller to leave a message.

8. A radio communication device of claim 1:

wherein the control unit, by using the transmitter-receiver unit, sends to the mobile telephone, as the instruction signal, a signal that instructs the mobile telephone to make a communication link between the radio communication device and the caller's communication device via the mobile telephone.

9. A radio communication device comprising:

a transmitter-receiver unit that carries out local and bidirectional communication with a mobile telephone;

an incoming call notification unit that, when the radio communication device receives from the mobile telephone an incoming call notification signal that indicates that there is an incoming call to the mobile telephone, carries out a notification of the incoming signal; and

a control unit that, by using the transmitter-receiver unit, sends to the mobile telephone a message to be sent to the caller to make the mobile telephone conduct processing for the incoming call.

10. A radio communication device comprising:

a transmitter-receiver unit that carries out local and bidirectional communication with a mobile telephone;

an incoming call notification unit that, when the radio communication device receives from the mobile telephone an incoming call notification signal that indicates that there is an incoming call to the mobile telephone, carries out a notification of the incoming signal; and

a control unit that, by using the transmitter-receiver unit, sends to the mobile telephone a message to be sent to the caller and an instruction signal that makes the mobile telephone conduct processing for the incoming call.

11. A radio communication device of claim 10, further comprising:

a storage unit that stores the message to be sent to a caller's communication device;

wherein the control unit sends the stored message to the mobile telephone.

12. A radio communication device of claim 10, further comprising:

an input unit that receives a message to be sent to a caller's communication device;

wherein the control unit stores in the storage unit the message that is input by using the input unit.

13. A radio communication device of claim **10**:

wherein the message to be sent to the caller is a message that tells the caller to wait for a moment.

14. A radio communication device of claim **10**:

wherein the message to be sent to the caller is a message that tells the caller to leave a message.

15. A radio communication device of claim **10**:

wherein the storage unit that, after sending the message when a caller-sent information is received through the mobile telephone, stores the caller-sent information.

16. A radio communication device of claim 15, further comprising:

an output unit that outputs the caller-sent information that is stored in the storage unit.

17. A radio communication device of claim **10**:

wherein the control unit, after sending to the mobile telephone the message to be sent to the caller, as the instruction signal, sends to the mobile telephone a record instruction that instructs the mobile telephone to record information sent from the caller's communication device in response to the message to be sent to the caller.

18. A radio communication device of claim **10**:

wherein the control unit, after sending to the mobile telephone the message to be sent to the caller, as the instruction signal, sends to the mobile telephone a change order that instructs the mobile telephone to let another device on a network as a substitute of the mobile telephone carry out a communication with the communication device of the caller.

19. A radio communication device of claim 10, further comprising:

an operating mode synchronization unit that intermittently conducts a communication with the mobile telephone and, when the operating mode of the mobile telephone shifts, shifts the operating mode of the radio communication device to the operating mode of the mobile telephone after shifting.

20. A radio communication device comprising:

a transmitter-receiver unit that carries out local and bidirectional communication with a mobile telephone;

an incoming call notification unit that, when the radio communication device receives from the mobile telephone an incoming call notification signal that indicates that there is an incoming call to the mobile telephone, carries out a notification; and

a control unit that, by using the transmitter-receiver unit, sends, in response to the incoming call, a change order that instructs the mobile telephone to let another device on a network as a substitute of the mobile telephone carry out a communication with the communication device of the caller.

21. A mobile telephone comprising:

a transmitter-receiver unit that carries out local and bidirectional communication with a radio communication device; and

a control unit that, after receiving an incoming call from a network, sends, by using the transmitter-receiver unit, an incoming call notification signal to the radio communication device; and, based on an instruction signal received from the radio communication device by the transmitter-receiver unit, responds to the caller by using voice in response to the incoming call.

22. A mobile telephone of claim 21, further comprising:

an incoming call notification unit;

wherein the control unit, when there is an incoming call to the mobile telephone, sends the incoming call notification signal in a case when there is a communication link between the mobile telephone and the radio communication device and carries out notification by using the incoming call notification unit in a case when there is a communication link between the mobile telephone and the radio communication device.

23. A mobile telephone of claim **21**:

wherein, during the processing for the incoming call, the control unit sends a connection request to a network, makes a communication link between the mobile telephone and the caller's communication device, and sends to the caller's communication device a message for the caller via the communication link.

24. A mobile telephone of claim **23**:

wherein, during the processing for the incoming call, the control unit, by the transmitter-receiver unit, sends to the radio communication device information about the caller sent in response to the message to be sent to the caller.

25. A mobile telephone of claim 23, further comprising a storage unit:

wherein the control unit stores information sent by the caller received via the network after sending message to be sent to the caller.

26. A mobile telephone comprising:

a transmitter-receiver unit that carries out local and bidirectional communication with a radio communication device; and

a control unit that, after receiving an incoming call from a network, sends, by using the transmitter-receiver unit, an incoming call notification signal to the radio communication device; and transfers to the caller a message to be sent to the caller, the message being received from the radio communication device by the transmitter-receiver unit.

27. A mobile telephone of claim 26 that intermittently conducts a communication with the radio communication device and, when the operating mode of the mobile telephone is shifted, sends to the radio communication device an operating mode shifting information that tells the operating mode of the mobile telephone after shifting.

28. A mobile telephone comprising:

a transmitter-receiver unit that can carries out local and bidirectional communication with a radio communication device; and

a control unit that, when the mobile telephone receives an incoming call, sends to the radio communication device an incoming call signal by using the transmitter-receiver unit, and when the mobile telephone receives a change order by using the transmitter-receiver unit, request to the network to change the connection from between the mobile telephone and the caller's device to between a device on the network and the caller's device.

29. A method for controlling a radio communication device with a transmitter-receiver unit that carries out local and bidirectional communication with a mobile telephone, the method comprising:

carrying out a notification when the transmitter-receiver unit receives an incoming call notification signal that indicates that there is an incoming call to the mobile telephone; and

sending, by using the transmitter-receiver unit, an instruction signal that makes the mobile telephone respond to the caller by using voice in response to the incoming call.

30. A control method for a radio communication device with a transmitter-receiver unit that is able to carry out local and bidirectional radio communication with a mobile telephone, the method comprising:

notifying, when the transmitter-receiver unit receives an incoming call signal, of incoming signal by using a notification unit; and

sending a message to be sent to the caller and an instruction signal that makes the mobile telephone respond to the caller by using the message.

31. A control method for answering an incoming call to a mobile telephone in a system that has the mobile telephone that can carries out local and bidirectional communication with a radio communication device, the method comprising:

transmitting an incoming call notification signal by the mobile telephone to the radio communication device when the mobile telephone receives an incoming call;

receiving the incoming call notification signal by the radio communication device;

notifying the incoming call by the radio communication device; and

sending an instruction signal that make the mobile telephone respond to the caller by using voice.

32. A control method for answering an incoming call to a mobile telephone in a system with the mobile telephone that

can carry out local and bidirectional communication with a radio communication device, the method comprising:

transmitting an incoming call notification signal by the mobile telephone to the radio communication device when the mobile telephone receives an incoming call;

receiving the incoming call notification signal by the radio communication device;

notifying the incoming call by the radio communication device; and

sending a message to be sent to the caller and an instruction signal that makes the mobile telephone respond to the caller by using the message.

33. A program for controlling a radio communication device that can carry out local and bidirectional radio communication with a mobile telephone, the program comprising:

a program that makes a control unit of the radio communication device conduct controlling for an incoming call notification when a transmitter-receiver unit of the radio communication device receives an incoming call notification signal that tells the mobile telephone receives an incoming call; and

a program that makes a control unit of the radio communication device send an instruction signal that makes the mobile telephone respond to the caller by using voice.

34. A program for controlling a radio communication device that is able to carry out local and bidirectional radio communication with a mobile telephone, the program comprising:

a program that makes a control unit of the radio communication device conduct controlling for an incoming call when a transmitter-receiver unit of the radio communication device receives an incoming call notification signal that indicates that the mobile telephone receives an incoming call; and

a program that makes the control unit of the radio communication device send an instruction signal that makes the mobile telephone send a message to be sent to the caller and respond to the caller by using the message.

35. A control method for a mobile telephone that can carry out local and bidirectional radio communication with a radio communication device, the method comprising:

making a control unit of the mobile telephone conduct controlling to send to the radio communication device an incoming call notification signal when the mobile telephone receives an incoming call; and

making a control unit of the mobile telephone respond to the caller by using voice based on the instruction signal received from the radio communication device.

36. A control method for a mobile telephone that can carry out local and bidirectional communication with a radio communication device, the method comprising:

making, when the mobile telephone receives an incoming call, a control unit of the mobile telephone send an incoming call notification signal to the radio communication device; and

making, when the mobile telephone receives, from the radio communication device, a message to be sent to the caller and an instruction signal that instructs the mobile telephone to forward the message, the control unit of the mobile telephone conduct processing for forwarding the message.

37. A program for controlling a mobile telephone that can carry out local and bidirectional radio communication with a radio communication device, the program comprising:

a program that makes a control unit of the mobile telephone conduct controlling to send to the radio communication device an incoming call notification signal when the mobile telephone receives an incoming call; and

a program that makes a control unit of the mobile telephone respond to the caller by using voice based on the instruction signal received from the radio communication device.

38. A control program for a mobile telephone that can carry out local and bidirectional communication with a radio communication device, the program comprising:

a program that, when the mobile telephone receives an incoming call, makes a control unit of the mobile telephone send an incoming call notification signal to the radio communication device; and

a program that, when the mobile telephone receives, from the radio communication device, a message to be sent to the caller and an instruction signal that instructs the mobile telephone to forward the message, makes the control unit of the mobile telephone conduct processing for forwarding the message.

39. A computer readable storage media that stores a control program for a mobile telephone which can carry out local and bidirectional radio communication with a radio communication device, the control program comprising:

a program that, when the mobile telephone receives an incoming call, makes a control unit of the mobile telephone conduct a processing for sending an incoming call notification signal; and

a program that, based on an instruction signal sent by the radio communication device, makes the control unit of the mobile telephone conduct processing for responding for the incoming call and for responding to the caller by using voice.

40. A computer readable storage media that stores a control program for a mobile telephone which can carry out local and bidirectional radio communication with a radio communication device, the control program comprising:

a program that, when the mobile telephone receives an incoming call, makes a control unit of the mobile telephone conduct a processing for sending an incoming call notification signal; and

a program that, when the mobile telephone receives from the radio communication device a message to be sent to the caller and an instruction signal that instructs to forward the message, makes the control unit of the mobile telephone conduct processing for responding to the incoming call and for forwarding the message to be sent to the caller.

41. A radio communication device comprising:

a transmitter-receiver unit that carries out local and bidirectional communication with another radio communication device;

a communication state judgement unit that measures and makes a judgement of state of the bidirectional communication; and

a notification unit that sends information about the state of the bidirectional communication measured by the communication state judgement unit.

42. A radio communication device of claim 41, further comprising:

a notification requirement judgement unit that, based on the judgement of the state done by the communication state judgement unit, makes a judgement whether or not to tell a user of the radio communication device information about the state of the bidirectional communication;

wherein the notification unit, when the notification requirement judgement unit judges the user should be notified, sends information about the state of communication.

43. A method for controlling a radio communication device, the method comprising:

carrying out local and bidirectional radio communication with another radio communication device;

judging state of the bidirectional radio communication with the other communication device; and

notifying the user of information about the state of the bidirectional radio communication.

44. A control program comprising:

a program that makes a control unit of a radio communication device carry out local and bidirectional radio communication between the radio communication device and a radio communication device;

a program that makes the control unit of the radio communication device judge state of bidirectional radio communication; and

a program that makes the control unit of the radio communication device notify the user of information about the state of the bidirectional radio communication.

45. A computer readable storage medium that stores a control program, the control program comprising:

a program that makes a control unit of a radio communication device carry out local and bidirectional radio communication between the radio communication device and a radio communication device;

a program that makes the control unit of the radio communication device judge state of the bidirectional radio communication; and

a program that makes the control unit of the radio communication device notify the user of information about the state of the bidirectional radio communication.

* * * * *