UNITED STATES PATENT AND TRADEMARK OFFICE

BEFORE THE PATENT TRIAL AND APPEAL BOARD

APPLE, INC.
Petitioner
v.

MULLEN INDUSTRIES LLC
Patent Owner

Inter Partes Review No.
IPR2022-__
Patent No. 11,190,633
Filing Date: February 4, 2014
Issue Date: November 30, 2021

PETITION FOR *INTER PARTES* REVIEW

TABLE OF CONTENTS

I. Introduction 1

II. IPR Requirements 2

A. Standing (37 C.F.R. § 42.104(a)) 2

B. Challenge Under 37 C.F.R. § 42.104(b) 2

III. Background 3

A. Priority Date and Family 3

B. The ’633 Patent 3

C. Relevant Prosecution History of the ’633 Patent 8

IV. Expert Testimony, Level of Skill in the Art, and Claim Construction 11

A. Declaration Evidence 11

B. Level of Ordinary Skill in the Art 11

C. Claim Construction 12

V. Prior Art 12

A. U.S. Patent No. 6,477,117 to Narayanaswami, et al. (Ex. 1005) 12

B. U.S. Patent Publication No. U.S. 2002/0115478 to Fujisawa, et al. (Ex. 1006) 16

C. U.S. Patent No. U.S. 6,539,336 to Vock, et al. (Ex. 1007) 18

D. Nokia 8890 User Guide (Ex. 1008) 20

VI. One of Skill in the Art Would have Been Motivated to Combine the Prior Art 21

A. Motivation to Combine Narayanaswami and Vock and Nokia User Guide 21

B. Motivation to Combine Fujisawa and Vock 24

C. Motivation to Combine Fujisawa, Vock and Nokia User Guide 25

VII. Full Statement of the Reasons for the Relief Requested 26

A. Ground 1: Claims 1-18, 22, 27, 29, and 35 are unpatentable as obvious over Narayanaswami in view of Vock 26

B. Ground 2: Claims 19-21, 23-26, 28, 30-34, and 36-39 are unpatentable as obvious over Narayanaswami and Vock and further in view of Nokia 8890 User Guide 42

C. Ground 3: Claims 1-10, 13, 16, 18, 19, 22-27, 35-39 are unpatentable as obvious over Fujisawa in view of Vock 48

D. Ground 4: Claims 11, 12, 14, 15, 17, 20, 21, and 28-34 are unpatentable as obvious over Fujisawa and Vock and further in view of Nokia 8890 User Guide 61

VIII. Secondary Considerations Cannot Overcome the Strong Evidence of Obviousness 65

IX. This Petition Should Not Be Discretionarily Denied 66

X. Conclusion 71

XI. Mandatory Notices 71

A. Real Parties in Interest (37 C.F.R. § 42.8(b)(1)) 71

B. Related Matters (37 C.F.R. § 42.8(b)(2)) 71

C. Payment of Fees (37 C.F.R. § 42.103) 71

D. Power of Attorney (37 C.F.R. § 42.10) 72

E. Designation of Lead and Backup Counsel (37 C.F.R. § 2.8(b)(3)) and Service Information (37 C.F.R. § 42.8(b)(4)) 72

EXHIBIT LIST

Exhibit No.	Description
1001	U.S. Patent No. 11,190,633
1002	Prosecution History of U.S. Patent No. 11,190,633
1003	Declaration of Dr. Harry Bims.
1004	Curriculum Vitae of Dr. Harry Bims.
1005	U.S. Patent No. 6,417,117 to Narayanaswami, et al.
1006	U.S. Patent Publication No. U.S. 2002/0115478 to Fujisawa, et al.
1007	U.S. Patent No. U.S. 6,539,336 to Vock, et al.
1008	Nokia 8890 User Guide (2002).
1009	Wayback Page for Accessing Nokia 8890 User Guide.
1010	Forbes Article (https://www.forbes.com/1999/12/07/mu6.html?sh=8d064a92135e)
1011	*Mullen Industries LLC v. Apple Inc.*, No. 6:22-cv-00145 (W.D. Tex. Feb. 9, 2022) – Complaint.
1012	Reserved.
1013	*Mullen v. Apple* – Agreed Scheduling Order, May 28, 2022.
1014	*District Court Trial Dates Tend to Slip After PTAB Discretionary Denials*, Scott McKeown, July 24, 2020.
1015	*Fintiv, Inc. v. Apple Inc.*, No. 1:21-cv-00896 (W.D. July 5, 2022), Order on Emergency Motion.
1016	Letter from Senator Tillis to USPTO Acting Commissioner Hirshfield regarding the Application of the *Apple, Inc. v. Fintiv* Decision, November 2, 2021.
1017	Director Vidal Memorandum re: *Interim Procedure for Discretionary Denials in AIA Post-Grant Proceedings with Parallel District Court Litigation*, June 22, 2022

I. Introduction

Apple Inc. ("Petitioner") hereby petitions for *inter partes* review ("IPR") of claims 1-39 ("Challenged Claims") of U.S. Patent No. 11,190,633 ("the '633 Patent" or "the Challenged Patent"), assigned to Mullen Industries LLC ("Patent Owner"). A copy of the '633 Patent and its prosecution history are attached as Exhibits 1001 and 1002.

The '633 Patent describes and claims a smart watch capable of receiving wireless signals from a mobile phone. The signals correspond to events, such as an incoming call or a calendar reminder. In response to receiving the signals, the watch provides a notification to the user regarding the event.

Such smart watches were well known in the art before the earliest possible priority date of the '633 Patent. For example, the Narayanaswami and Fujisawa references on which this petition relies each discloses a smart watch capable of communicating wirelessly with a mobile telephone and providing notifications and alerts in response to events originating on the mobile telephone. These references combined with Vock, which discloses a smart watch with a particular band design and various motion sensors, and the Nokia 8890 User Guide, which discloses functionality commonly available on mobile phones at the time of alleged invention, render all of the Challenged Claims obvious.

The Board should cancel claims 1-39 of the '633 Patent.

Petitioner Samsung Ex-1021, 0005

II. IPR Requirements

A. Standing (37 C.F.R. § 42.104(a))

Petitioner certifies that the ’633 Patent is available for IPR and Petitioner is not barred or estopped from requesting IPR. The ’633 Patent issued on November 30, 2021; this Petition is filed within one year of service of the Complaint against Petitioner alleging infringement of the ’633 Patent (*see* Ex. 1011, Complaint filed on February 9, 2022) and is not barred under 35 U.S.C. § 315(b).

B. Challenge Under 37 C.F.R. § 42.104(b)

Pursuant to 35 U.S.C. § 311 and 37 C.F.R. § 42.104(b), this petition requests cancellation of claims 1-39 as rendered obvious under 35 U.S.C. § 103 based on the following prior art references:

- U.S. Patent No. 6,417,117 to Narayanaswami, et al.;
- U.S. Patent Publication No. U.S. 2002/0115478 to Fujisawa, et al.;
- U.S. Patent No. U.S. 6,539,336 to Vock, et al.; and
- Nokia 8890 User Guide.

The statutory grounds for the challenge of each claim are set forth below.

Ground	35 U.S.C. §	Claims	References
1	103	1-18, 22, 27, 29, and 35	Narayanaswami in view of Vock
2	103	19-21, 23-26, 28, 30-34, and 36-39	Narayanaswami in view of Vock and Nokia 8890 User Guide

3	103	1-10, 13, 16, 18, 19, 22-27, 35-39	Fujisawa in in view of Vock
4	103	11, 12, 14, 15, 17, 20, 21, 28-34	Fujisawa in in view of Vock and Nokia 8890 User Guide

The record establishes a reasonable likelihood of prevailing as to each ground of invalidity with respect to the Challenged Claims.

III. Background

A. Priority Date and Family

The ’633 Patent was filed on February 4, 2014 and issued on November 30, 2021. The ’633 Patent is a continuation of application No. 13/453,659, filed on Apr. 23, 2012, now U.S. Pat. No. 8,682,398, which is a continuation of application No. 10/797,801, filed on Mar. 9, 2004, now U.S. Pat. No. 8,165,640. The ’633 Patent also claims priority to provisional application No. 60/455,218, filed on Mar. 14, 2003. Accordingly, the earliest possible effective filing date of the ’633 Patent is March 14, 2003. The ’633 patent is thus subject to pre-AIA 35 U.S.C. §§ 102 and 103.

B. The ’633 Patent

The ’633 Patent relates to systems and methods for remote incoming notifications for cell phones. Ex. 1001, 1:39-43; 1:54-57; 2:41-47. The ’633 patent explains that cell phones typically generate a sound or vibrate to notify a user of an incoming call (or calendar reminder or other alerts). *Id.,* 1:20-29. According to the

’633 Patent, however, if the phone is in a location where a user cannot hear or feel the phone, like in a purse, then the user may miss the notification. *Id.,* 1:30-38. Thus, the patent purports to provide “systems and methods that allow incoming calls, or other cell phone events or notifications, to be recognized by a user even when the user cannot hear or sense audio signals or vibration signals physically emanating from the cellular phone.” *Id.,* 1:47-51.

More specifically, the ’633 Patent aims to provide a “user signaling device,” e.g., a watch, that is connected to a cell phone—wired or wirelessly—that can detect an incoming call (or other alert, like a calendar reminder) and provide a supplemental notification signal to the user. *Id.,* 1:52-2:3. The supplemental notification may be an audible signal, mechanical signal (ex. vibration), or other type of signal such as light pulses. *Id.,* 1:61-64, 3:56-60.

Figures 1 and 2 (reproduced below) show the wired and wireless remote cell phone notification devices described in the specification, respectively.

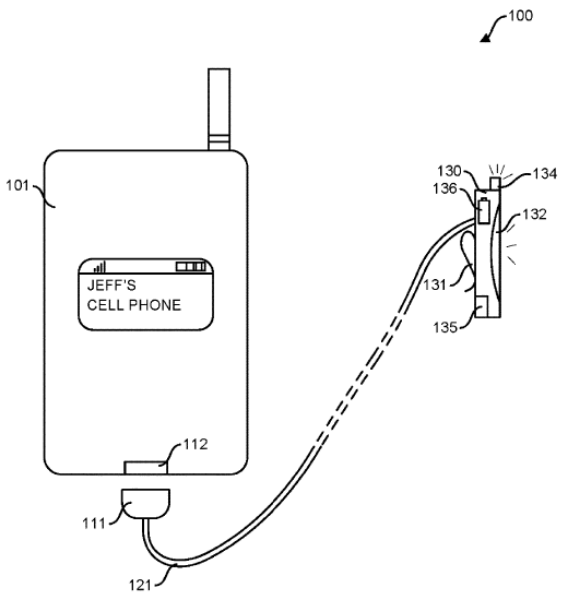

FIG. 1

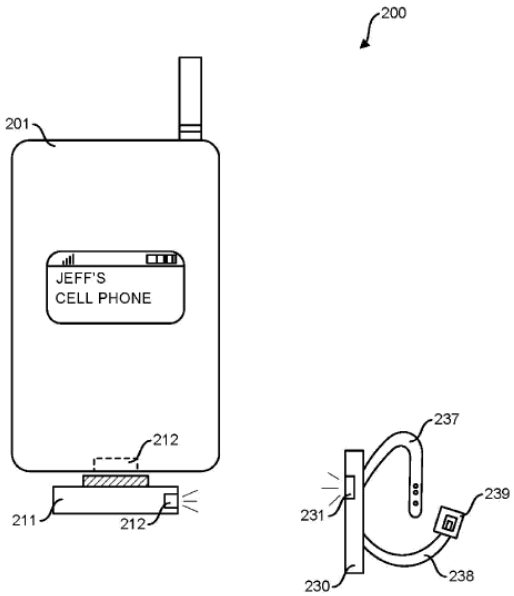

FIG. 2

The remote notification device 130, 230 responds to signals from a communication device on the phone 112, 211 (e.g., speaker, vibrational output) and alerts the user of the notification. *Id.,* 3:11-18. The ’633 Patent states that the remote notification device in both embodiments includes a communication device 111, 231 that communicates with the communication device on the phone 112, 211. *Id.,* 3:31-41, 3:62-4:2. In the non-wireless embodiment, the communication device 111 of the remote notification device 130 may connect to the phone’s communication device 112 via the headset output and/or microphone jack. 3:21-25, 3:42-46. In the wireless embodiment, the communication device 211 may be

connected to the cell phone 201 and used to "transmit/receive signals wirelessly to/from remote communication device 230." *Id.,* 3:67-4:1.

The '633 Patent also describes that the wireless remote communications device "may be embedded into a device that is commonly used by users (e.g., a watch, glasses, clothing) and may attach to a user by a variety of devices (e.g., bands 237 and buckle 239)." *Id.,* 4:13-16. Further, "the functionality of remote notification device 230 may be embedded into a device that is commonly utilized by users. For example, if a user's watch has a wireless communications device, software may be included in the watch to provide a functionality similar to remote notification device 230." *Id.,* 4:16-21.

The '633 Patent also describes a system having an autonomous notification sensing device 350 attached to a phone for times when a user is remotely located from the phone. *Id.,* 4:36-48; Fig. 3. The autonomous device 350 is coupled to a notification device 330. 4:49-5:3. The notification device 330 produces a notification signal (e.g., sound, light, vibration) when the autonomous device senses an alert via a vibration sensor 352, a light sensor 353, or a sound sensor 354. *Id.,* 2:35-41; 5:30-39; 5:52-59.

Finally, the specification describes Figure 5 (reproduced below) as depicting the process of alert sensing, routing, and notifications systems described in the '633 Patent.

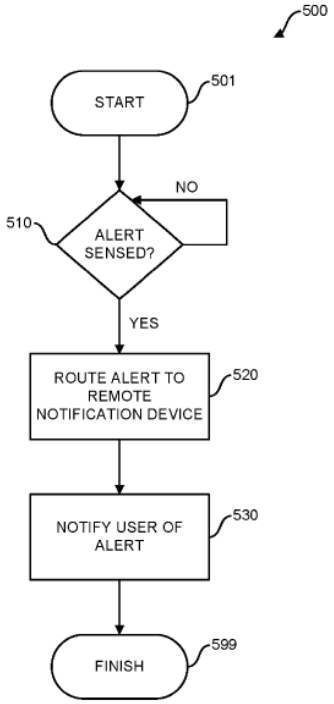

FIG. 5

The ’633 patent includes one independent claim and 38 dependent claims. Claim 1 recites:

> **[pre]** A watch for use with a mobile telephonic device that provides notification of an incoming call, said watch comprising:
>
> **[a]** a watch band; a second watch band; a buckle, wherein said buckle is coupled to said second watch band; and
>
> **[b]** a device operable to receive first wireless communication signals associated with a first event and second wireless communication

signals associated with a second event from said mobile telephonic device, wherein said first event and second event are different,

[c] said device includes a battery,

[d] said device includes motion sensing operable to distinguish between a plurality of different types of motion,

[e] said device is operable to provide first user-perceivable notification signals that are dependent upon said received first communication signals, and

[f] said device is operable to provide second user perceivable notification signals that are dependent upon said second communication signals.

The dependent claims recite aspects of the watch, e.g., claim 2 recites an amplifier and claim 4 a display, or recite the relationship between the particular notification and the event, e.g., claim 10 recites an incoming call, claim 11 a calendar notification, and claim 12 a reminder. And many of the dependent claims merely recite different combinations of these elements. For example, claim 33 recites the combination of an incoming call, a missed call, and a text message, while claim 34 recites the combination of an incoming call, a voice message, and a text message.

C. Relevant Prosecution History of the ’633 Patent

The ’633 patent was filed as a continuation on February 4, 2014 and issued almost eight years later on November 10, 2021. Ex. 1002. The lone independent

claim as originally presented in a Preliminary Amendment recited:

> A watch for use with a mobile telephonic device that provides notification of an incoming call, said watch comprising:
>
> a watch band; and
>
> a remote communication device configured to receive wireless communication signals from said mobile telephonic device, wherein said communication device includes a battery, said communication device is configured to provide user-perceivable notification signals that are dependent upon said received communication signals.

Ex. 1002, 3. Applicant initially focused on the "watch band" element as the inventive aspect, asserting, "Applicant's inclusion of a low technology buckle with bands coupled with a high technology watch generates a whimsical and festive nature of the device – an element that creates a whimsical and festive nature is bona fide patentable." Ex. 1002, 142-143 (10/1/2015 Response).

During lengthy prosecution, the independent claim grew, eventually leading to a Notice of Allowance. The examiner's statement of reasons for allowance stated that the alleged invention "provides a remote notification to a user of a cellular, or mobile, phone as the result of a particular activity or any activity at all (e.g., an incoming call from a particular person, group, or just an incoming call." Ex. 1002, 486. More specifically, the Examiner focused on "motion sensing," stating:

> Prior art of record in combination or alone fails to teach or suggest the limitation (underlined) of an amend[ed] claim 19 recites: a watch band; a second watch band; a buckle, wherein said buckle is coupled to said second watch band; and a device operable to receive first wireless communication signals associated with a first event and second wireless communication signals are associated with a second event from said mobile telephonic device, wherein said first event and second events are different, said device includes a battery, <u>said device includes motion sensing operable to distinguish between a plurality of different types of motion</u>, said device is operable to provide first user-perceivable notification signals that are dependent upon said received first communication signals, and said device is operable to provide second user perceivable notification signals that are dependent upon said second communication signals.

Id.

The Examiner cited a paragraph of the specification describing motion sensing. "According to paragraph [0031] of published application discloses: control circuitry may, for example, be able to distinguish ambient motion (e.g., the soft-motion of somebody walking or a single hard-motion of a purse hitting a countertop) from a vibrating cell-phone motion (e.g., a high-frequency, hard,

repetitious motion)." *Id.* In the independent claim, "motion sensing [is] operable to distinguish between a plurality of different types of motion" but the claim does not recite sensing motion or making use of information gathered through sensing motion. Further, none of the dependent claims further limits or even recites aspects of the motion sensing recited in the independent claim.

IV. Expert Testimony, Level of Skill in the Art, and Claim Construction

A. Declaration Evidence

This petition is supported by the declaration of Dr. Harry Bims. Ex. 1003. Dr. Bims has worked extensively in the field of digital communications. He has studied telecommunications and systems engineering since approximately 1981. Further, he has over 20 years of industry experience in computer network design, including the design of hardware and software for computer communications in a wireless context. During this period, he has designed and implemented various products that involve technologies related to the subject matter of the Asserted Patent.

B. Level of Ordinary Skill in the Art

The '633 patent describes and claims aspects and functionality of a watch in communication with a mobile telephone. A person of ordinary skill in the art ("POSITA") of the '633 Patent would have had at least a Bachelor of Science degree in computer science, computer engineering, electrical engineering or a

similar degree with one or two years of experience with operating system and application software in mobile devices, such as cell phones, personal digital assistants, and smart watches. Ex. 1003, ¶60. Additional practical experience would substitute for lack of a formal degree. *Id.,* ¶61. Dr. Bims was at least one of skill in the art at the time of the alleged invention.

C. Claim Construction

The claim terms of the '633 Patent are construed under the *Phillips* standard, considering the plain meaning of the claim terms to a person of ordinary skill in the art, in light of the intrinsic record.[1] None of the claim terms of the '633 Patent need be construed by the Board. *See,* Ex. 1003, ¶59.

V. Prior Art

A. U.S. Patent No. 6,477,117 to Narayanaswami, et al. (Ex. 1005)

The '117 patent, entitled "Alarm Interface for a Smart Watch," was filed on June 30, 2000, and issued November 5, 2002. Ex. 1005. The '117 patent is thus prior art to the '633 Patent under at least pre-AIA 35 U.S.C. § 102(a) and (e).

---

[1] Petitioner is not conceding that each claim satisfies all statutory requirements, such as §§ 101 and 112, nor is Petitioner waiving any arguments concerning claim scope or grounds that can only be raised in district court.

Narayanaswami describes a smart watch able to communicate with other devices, such as a cellular phone:

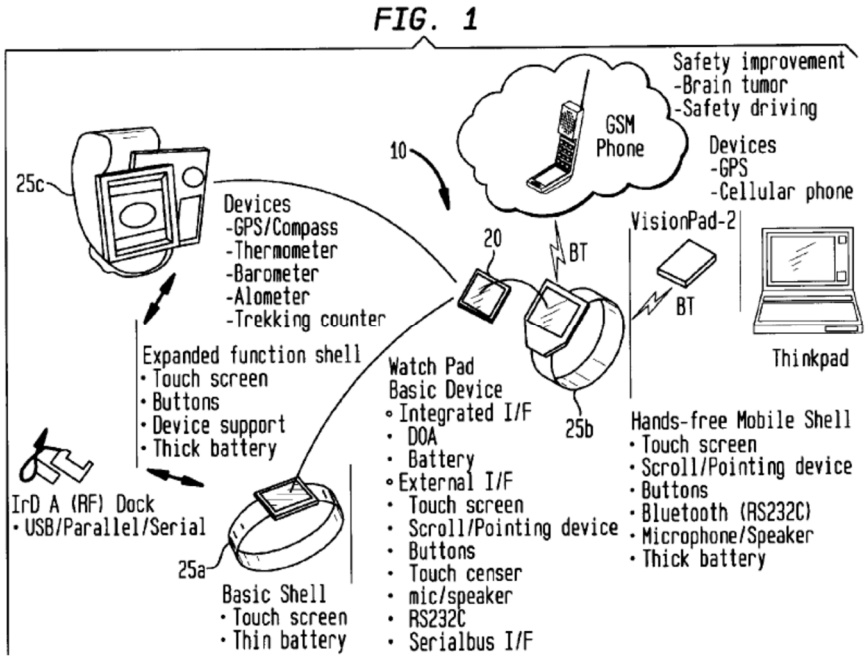

Ex. 1005, Fig. 1. "[T]he system looks like a regular watch but is capable of receiving information from adjunct devices such as a PC, a mobile computer, other pervasive devices being carried by the user and directly from a network via a wireless communications mechanism." Ex. 1005, 3:29-33. For example, "caller Id information may be displayed on the Wrist Watch display when the cell phone that belongs to that person rings." Ex. 1005, 8:3-5. In particular, Narayanaswami teaches implementation of IrDA and Bluetooth wireless communication protocols for sending and receiving wireless communication signals. "IrDA system driver 214, RF-Modem subsystem driver 216, Bluetooth system driver 218." *Id.*, 6:53-55.

Further, Narayanaswami describes hardware circuitry such as "communications subsystems [that] include circuitry for supporting BlueTooth 81 or like small-factor, low-cost radio solution circuitry, e.g., an RF-modem 76, and may include other low power radio . . . the auxiliary communication card 80 implements the Bluetooth industry standard for Radio Frequency (RF) communication, however, it is understood that other standards such as IEEE 802.11 or other RF protocols may be implemented as well." *Id*., 4:60-5:1. As an example, Narayanaswami describes a wireless communication signal when using a Bluetooth communication protocol as "a wireless Bluetooth beacon that periodically broadcasts information asking devices to be silent", where "presumably, the beacon may transmit every minute asking the devices to be quiet for the next five minutes." *Id*., 12:45-47, 12:56-58.

Narayanaswami further teaches that "additional sensors may be attached to the Wrist Watch device over an interface. Examples may include additional tilt and motion (velocity, direction, speed) sensors." Ex. 1005, 6:15-19.

The watch display may vary, depending on what is being displayed:

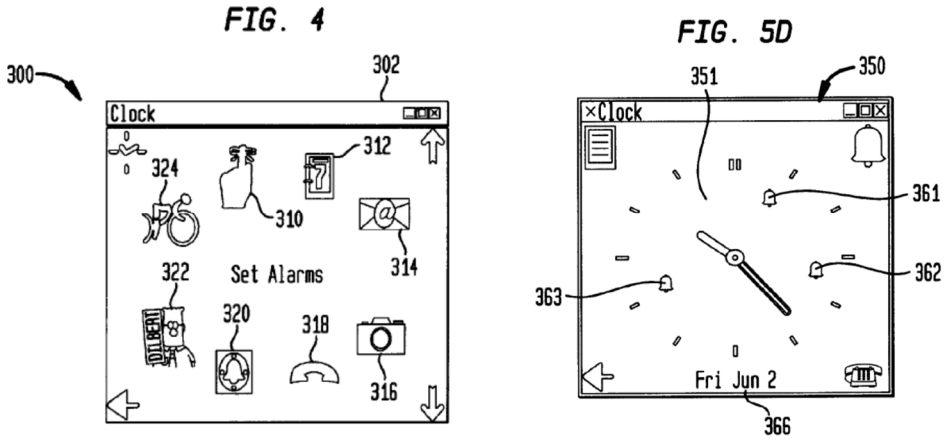

Ex. 1005, Figs. 4, 5. "FIG. 4 illustrates an example system display 300 providing a main menu 302 comprising selectable icons for launching the following PIM applications: an icon 310 for launching an application directed to displaying/maintaining 'to do' lists, ... calendars and appointments, ... e-mail messages, ... phone lists, ... [and] setting of time and alarms...." Ex. 1005, 7:38-56. "FIG. 5(d) illustrates the resulting Wrist Watch display 350 showing an elliptical watch face 351 indicating the current time with the provision of an alarm indicating icon 361 provided at the scheduled alarm time...." Ex. 1005, 8:62-65.

Alarms may also be notifications of defined events. "[B]esides setting the alarm manually, … an alarm may be triggered by another agent, such as a remote RF transmitter (Bluetooth) or pager. … [E]vents, such as sports scores, or user's stock prices, may be programmed to trigger an alarm for receipt by the wrist watch receiver device…." Ex. 1005, 13:1-7.

B. U.S. Patent Publication No. U.S. 2002/0115478 to Fujisawa, et al. (Ex. 1006)

The ’478 publication, entitled, “Mobile Telephone and Radio Communication Device Cooperatively Processing Incoming Call,” was filed as a PCT application on June 21, 2001, published on August 22, 2002, and is thus prior art under at least pre-AIA 35 U.S.C. §§ 102(a) and (e).

According to Fujisawa, “[w]hen there is an incoming call to a mobile telephone, it sends an incoming call notification signal to a watch-shaped information processing device.” Ex. 1006, Abstract. The watch allows the user to communicate with other users in a mobile telephone system:

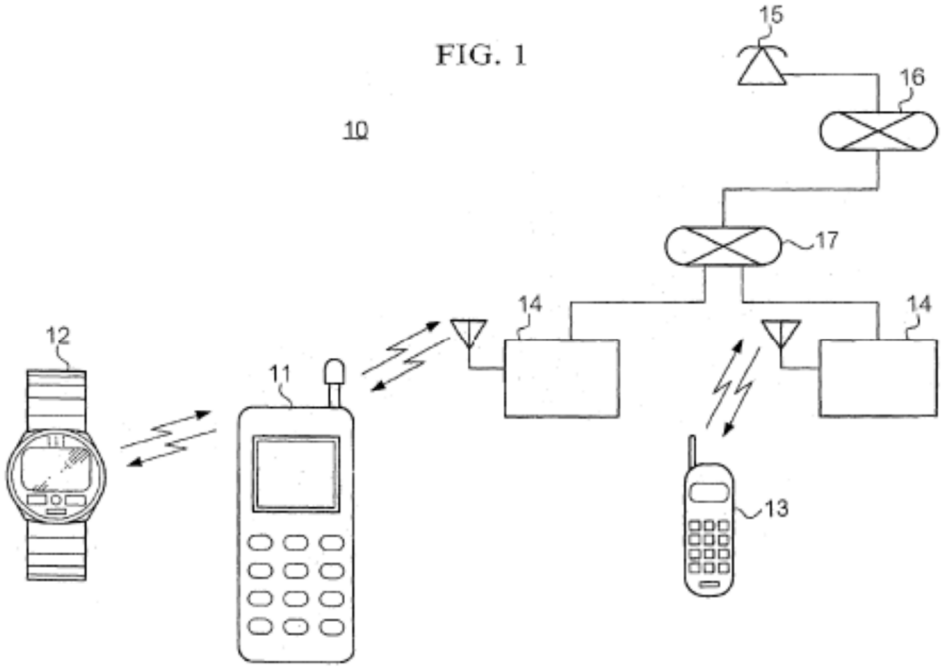

Ex. 1006, Fig. 1. "The watch-shaped information processing device 12 performs bidirectional radio communication with the mobile telephone 11." Ex. 1006, ¶[0128]. In particular, Fujisawa teaches the implementation of a wireless communication protocol for sending and receiving wireless communication signals. "The local and bidirectional communication may be a Bluetooth communication" and "the bidirectional radio communication may be radio communication may be based on the bluetooth technique and signal received periodically from the radio communication device may be an inquiry signal that slave unit receives from the master unit or an inquiry response signal that the master unit receives from the slave unit". *Id*., [0007], [0079]. "As shown in FIG. 7, a Bluetooth module 42 performs bidirectional communication with the watch-shaped information processing device 12A via a antenna 41 for Bluetooth". *Id.,* [0164]. "An RF unit 54 of the Bluetooth module 42 perform high frequency signal processing such as amplifying high frequency signal and performs bidirectional communication with the watch-shaped information processing device 12A. A baseband processing unit 55 modulates/demodulates baseband signals based on Bluetooth technique." *Id*., [0172-0173].

The watch performs a variety of functions, such as call answering, recording and playback of voicemail messages, and email, in conjunction with the mobile telephone:

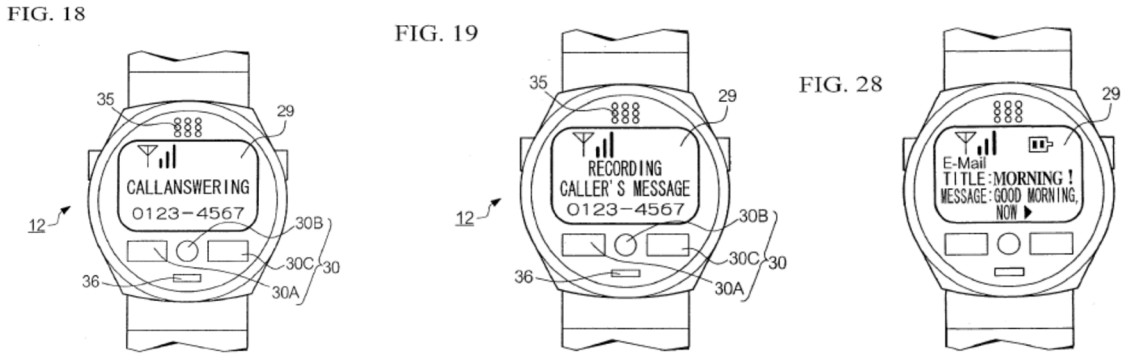

Ex. 1006, Figs. 18, 19, and 28. Fujisawa describes various mechanisms to notify a user of an incoming call, including "the electronic sound unit 26 to produce a buzzer sound or an electronic sound, the vibrator 27 to produce a vibration, or the light emitting unit 28 to blink light emitting device such as an LED." Ex. 1006, ¶[0156].

C. U.S. Patent No. U.S. 6,539,336 to Vock, et al. (Ex. 1007)

The '336 patent, "Sport Monitoring System for Determining Airtime, Speed, Power Absorbed and Other Factors Such as Drop Distance," was filed on June 1, 1998 and issued on March 25, 2003 and is thus prior art under at least pre-AIA 35 U.S.C. § 102(e).

Vock describes a watch for sensing and displaying various measures of motion or forces while a user is participating in a sport or athletic activity. "FIG. 38 shows a 'shock' or 'G' or power digital watch 1020 constructed according to the invention." Ex. 1007, 44:26-27.

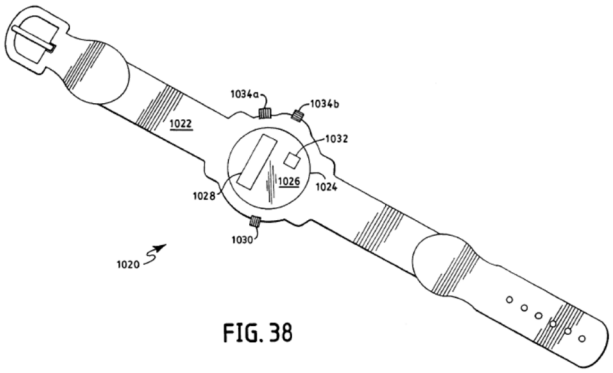

FIG. 38

"As in normal watches, a band 1022 secures the watch 1020 on a user's wrist so that the watch face 1024 can be viewed." Ex. 1007, 44:27-29. "The watch 1020 also holds a power sensing unit 1032...." *Id.,* 44:33-34. "The power sensing unit ... provides a measure of the intensity or how 'hard' the user played during a particular activity." *Id.*, 10:15-17. The power sensing unit may include, for example, one or more microphones or accelerometers. *Id.,* 44:55-56. The watch may also include an altimeter to provide a "dual drop distance and-power watch embodiment." *Id.,* 44:66-45:5.

Vock describes using an RF or infrared-based wireless communication protocol to communicate wireless communications signals to/from a sensing unit and a data unit as a method for transmitting performance data. "In one preferred aspect, the performance data is transmitted via radiofrequencies (or other data transfer technique, including infrared light or inductively-coupled electronics) from the sensing unit to a data unit which is ergonomically compatible with the user".

Id., 4:54-56. "Data can also be transmitted from the sensing unit to a base station, as discussed above. Those skilled in the art should appreciate that other data transfer techniques can be used instead of the RF, including IR data transfer between the units." *Id*., 18:21-25. "A controller subsystem 1110 connects to the strip 1108 to process transducer data; and that processed data is transferred, for example, to the watch 1112 worn by the user by way of infrared energy signals from a diode/detector pair 1114a/b or other similar optical data transfer devices. The units 1100a and 1100b preferably permit communication between units, either direction." *Id*., 46:23-30.

D. Nokia 8890 User Guide (Ex. 1008)

The Nokia 8890 User Guide ("Nokia User Guide") has a copyright date of 2000 and states that it was printed in May 2000. Ex. 1008, 3. Further, Nokia was captured by the Wayback Machine on February 3, 2002. *See* Ex. 1009. Thus, the User Guide was prior art under at least pre-AIA 35 U.S.C. §§ 102(a) and (b).

The Nokia User Guide describes various features, including hardware and software, of the Nokia 8890 mobile phone. See, Ex. 1008, i-vi. The Nokia mobile phone performed functions typically available in 2002, such as making and receiving calls. *Id.*, 16. The mobile phone also supported sending and receiving text messages. *Id., 74.*

The mobile phone could also perform as a personal digital assistant, including maintaining a user's calendar. *See*, i*d.,* 87. "The calendar keeps track of reminders, calls you need to make, meetings, and birthdays. It can even sound an alarm when it's time for you to make a call or go to a meeting." *Id.*

The phone described in the Nokia User Guide could also receive wireless communication signals over an IrDA wireless communication protocol. "You can set up your phone to receive data through its infrared (IR) port. To use an IR connection, the device with which you want to establish a connection must be IrDA compliant." *Id.,* 96.

VI. One of Skill in the Art Would have Been Motivated to Combine the Prior Art

A. Motivation to Combine Narayanaswami and Vock and Nokia User Guide

One of skill in the art would have been motivated to combine the smart watches described in Narayanaswami and Vock. First, the references are analogous. Ex. 1003, ¶89. Both describe watches that include microprocessors, display the current time, and allow the user to access information directly from the watch, such as phone calls or performance data. *Id.*; Ex. 1006, ¶[0005]; Ex. 1007, 40:38-45.

One of skill in the art at the time of the alleged invention would have understood that the watch of Narayanaswami provides a convenient mechanism to

access a variety of data, including the performance data described in Vock, without having to physically access another device. Ex. 1003, ¶90. By the time of alleged invention, it was well known to combine multiple different types of functionality into a single mobile device as Narayanaswami demonstrates. *Id*. Vock describes additional functionality that could be incorporated into the Narayanaswami smart watch, and one of skill in the art would have been motivated to do so to provide a watch having additional types of notifications and the ability to sense additional events for which notifications might be generated. *Id*. Since Narayanaswami and Vock both describe watches having processors, sensors, and software, one of skill in the art would have expected to have been successful in incorporating the software, sensors, and two-piece watch band of Vock into the Narayanaswami smart watch. *Id.*. For example, Vock describes motion sensors that are designed to be installed in a watch as well as software for receiving signals from the sensors and performing algorithms; incorporating the sensors and software from the Vock watch into the Narayanaswami watch would be well within the skill of a person of ordinary skill in the art. *Id*.

Further, while Narayanaswami does not describe the components of the watch band, it had been well known for decades to have two watch bands extending from a watch with a buckle to connect the bands to one another as that provides a band that is adjustable for users having different sized wrists. Ex. 1003,

¶91. Thus, one of skill in the art would have been motivated to incorporate the watch band of Vock to the Narayanaswami smart watch. *Id*. And since both watches include similar designs that each includes a lug on each side of the face, one of skill in the art would have expected to be successful in doing so. *Id*.

One of skill in the art would have also been motivated to incorporate the mobile phone features described in the Nokia 8890 User Guide with the smart watches described in Narayanaswami and Vock. At the time of the purported invention, Nokia was the world's largest mobile phone maker. See, e.g., Ex. 1010. One of skill in the art would have been aware of the existence and feature set of Nokia mobile phones. Ex. 1003, ¶92.

Further, the references are analogous. Ex. 1003, ¶93. Both Narayanaswami and Vock describe watches that include microprocessors and displays that allow the user to access information directly from the watch while the Nokia User Guide discloses a mobile phone with a processor, display and applications (including a clock) *Id.*; Ex. 1006, ¶[0005]; Ex. 1007, 40:38-45; Ex. 1009, 64. Both Narayanaswami and Vock disclose integrating features of a mobile phone into the smart watch; it would have been obvious to look to the features disclosed in a mobile phone user guide, such as the Nokia User Guide, to identify and integrate features into the smart watches disclosed in Narayanaswami and Vock. *Id.* Further, the smart watches and mobile phones included programming environments for

including such features; one of skill in the art would have had the expectation of successfully incorporating any of the various features of the Nokia User Guide into Narayanaswami and/or Vock by modifying the software of the Narayanaswami or Vock smart watch. *Id*.

B. Motivation to Combine Fujisawa and Vock

One of skill in the art would have been motivated to combine the smart watches described in Fujisawa and Vock. First, the references are analogous. Ex. 1003, ¶94. Both Fujisawa and Vock describe watches that include microprocessors and displays that allow the user to access information directly from the watch in addition to the current time, such as phone calls or performance data. *Id.*; Ex. 1006, ¶[0005]; Ex. 1007, 40:38-45.

One of skill in the art at the time of the alleged invention would have understood that the Fujisawa watch provides a convenient mechanism to access a variety of data, including the performance data described in Vock, without having to physically access another device. Ex. 1003, ¶95. By the time of alleged invention, it was well known to combine multiple different types of functionality into a single mobile device. *Id*. Thus one of skill in the art would be motivated to incorporate the motion sensors described in Vock, e.g., microphones, accelerometers, or altimeters, and the corresponding software from the Vock smart watch into the smart watch described in Fujisawa to provide additional known

features to the Fujisawa watch that would appeal to, for instance, athletes desiring to monitor performance in a convenient manner. *Id.* And since both watches include similar hardware configurations, one of skill in the art would have expected to be successful in doing so since the Fujisawa smart watch could be programmed to accept and process the data from the Vock sensors incorporated into Fujisawa watch. *Id*.

C. Motivation to Combine Fujisawa, Vock and Nokia User Guide

One of skill in the art would have been motivated to incorporate the features described in the Nokia 8890 User Guide with the smart watches described in Fujisawa and Vock. At the time of the purported invention, Nokia was the world's largest mobile phone maker. See, e.g., Ex. 1010. One of skill in the art would have been aware of the existence and feature set of Nokia mobile phones. Ex. 1003, ¶96.

Further, the references are analogous. Ex. 1003, ¶97. Both Fujisawa and Vock describe watches that include microprocessors and displays that allow the user to access information directly from the watch while the Nokia User Guide discloses a mobile phone with a processor, display and applications (including a clock) *Id.*; Ex. 1006, ¶[0005]; Ex. 1007, 40:38-45; Ex. 1009, 64. Both Fujisawa and Vock disclose integrating features of a mobile phone into the smart watch; it would have been obvious for one of skill in the art to look to the features disclosed in a mobile phone user guide, such as the Nokia User Guide, in order to identify

and integrate features into the smart watches disclosed in Fujisawa and Vock. *Id*. Further, the smart watches and mobile phones included programming environments for including such features; one of skill in the art would have had the expectation of successfully incorporating any of the various features of the Nokia User Guide into Fujisawa and/or Vock by simply modifying the software in the Fujisawa or Vock smart watches to incorporate the additional features of the Nokia mobile phone. *Id*.

VII. Full Statement of the Reasons for the Relief Requested

A. Ground 1: Claims 1-18, 22, 27, 29, and 35 are unpatentable as obvious over Narayanaswami in view of Vock

Narayanaswami discloses all elements of the independent claim (other than a two-piece band with a buckle) and most elements of the dependent claims. Vock discloses the two-piece band and buckle. The combination of Narayanaswami and Vock renders claims 1-18, 22, 27, 29, and 35 obvious.

1. Independent claim 1

a. *Claim 1 Preamble – A watch for use with a mobile telephonic device that provides notification of an incoming call, said watch comprising[2]:*

Narayanaswami discloses the preamble, stating "[a] wearable mobile computing device/appliance (a wrist watch) with a high resolution display that is capable of wirelessly accessing information from a network and a variety of other devices. The mobile computing device/appliance includes a user interface that is used to efficiently interact with alarms and notifications on the watch." Ex. 1005, Abstract; Ex. 1003, ¶99. For example, "caller Id information may be displayed on the Wrist Watch display 5 when the cell phone that belongs to that person rings." Ex. 1005, 8:3-5.

b. *Claim 1a – a watch band; a second watch band; a buckle, wherein said buckle is coupled to said second watch band; and*

Narayanaswami combined with Vock discloses element 1a, including a watch with a watch band:

---

[2] Petitioner does not take a position as to whether the preamble is limiting. However, if the Board finds it is limiting, the prior art of either of the two primary grounds, 1 and 3, discloses it.

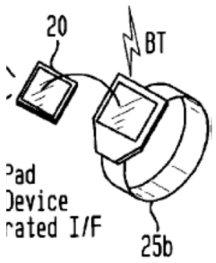

Ex. 1005, Fig. 2. However Narayanaswami does not disclose the specific elements of the claimed watch band. Vock provides such disclosure:

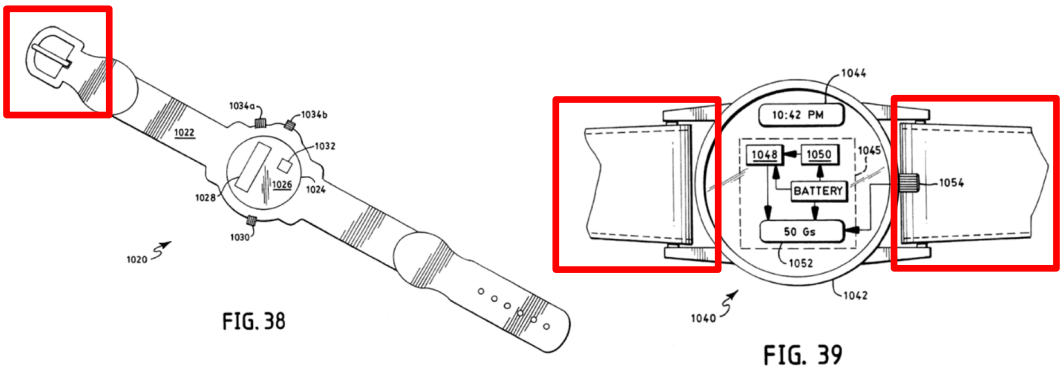

Ex. 1007, Figs. 38, 39; Ex. 1003, ¶100. Figure 39 (annotated and on the right) demonstrates that the smart watch of Vock includes two bands—one connected to the lug on the left, and one to the right. And Figure 38 (annotated and on the left) discloses the buckle that affixes the bands to one another. And as discussed in Section VI.A, it would have been obvious to incorporate the two-band strap with a buckle disclosed in Vock with the Narayanaswami smart watch, at least because this is how watches have functioned for decades. *Id*.

c. ***Claim 1b – a device operable to receive first wireless communication signals associated with a first event and second wireless communication signals associated with***

a second event from said mobile telephonic device, wherein said first event and second event are different,

Narayanaswami discloses element 1b, describing various wireless communication protocol drivers, such as "IrDA system driver 214, RF-Modem subsystem driver 216, Bluetooth system driver 218" (Ex. 1005, 6:53-55) as well as circuitry to implement wireless communications. Ex. 1005, 4:60-5:1; Ex. 1003, ¶101. Narayanaswami also describes a first event: "caller Id information may be displayed on the Wrist Watch display when the cell phone that belongs to that person rings." Ex. 1005, 8:3-5. Narayanaswami also discloses a second event—a second call. While the two events must be different, the claim does not require events of different types. *Id.*, ¶102. Thus, Narayanaswami discloses receiving first and second events in that it is operable to receive multiple phone calls, i.e., receiving a first call (first event) and a second call (second event). *Id.*

Further, Narayanaswami discloses a second event of a different type, "[f]or instance, an alarm actually may come from some other source, for example, the user's PC which maintains a list of appointments for the user with one of the appointments having an associated alarm indicating what the appointment was. Then, that information may be input to the Wrist Watch, such that the watch may subsequently activate the alarm at the programmed time, and accordingly indicate the associated text." *Id.,* 9:23-31. While Narayanaswami describes the transfer of

information as being "input to the Wrist Watch," one of skill in the art would recognize that Narayanaswami is describing the wireless transmission of information from the PC to the watch. Ex. 1003, ¶¶103-104. Alternatively, such transmission would have been obvious as the smart watch is in communication with the mobile device and the determination of whether and where to store the calendar entry and how to transfer information between the mobile device and the smart watch are merely design choices. *Id*. The "wireless communication signals [are] associated with" an event and thus receiving either the notification of the appointment or the appointment itself would satisfy these limitations. *Id*.

Further, while Narayanaswami describes the appointment as originating at a user's PC, Narayanaswami also describes that a mobile device, the watch itself, can execute a calendar application. Ex. 1003, ¶105. Similarly, a mobile phone would be capable of executing a calendar application. *Id*. Thus, it would have been obvious to receive the calendar information from the wireless phone. *Id*. For example, in describing the communications interface, the Ex. 1005 notes, "The synchronization manager 250 is provided to synchronize data between the Wrist Watch and the other devices. Particularly, it receives the data from the communication channel and operates in conjunction with the right application to decode the sent data and update the data for the application receiving the data. An example of this would be an update to a calendar event." Ex. 1005, 7:3-9. Thus,

Narayanaswami discloses two different events received by the watch in wireless communications signals. *Id*.

d. *Claim 1c – said device includes a battery,*

Narayanaswami discloses element 1c, noting that the device includes a battery, either "thick" or "thin":

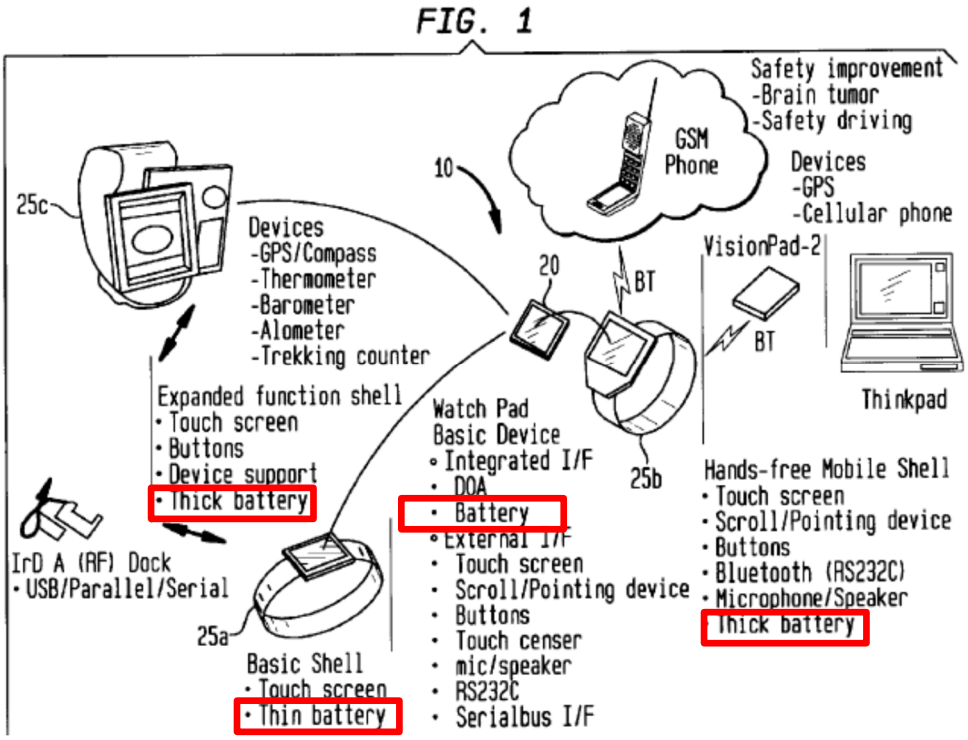

Ex. 1005, Fig. 1 (annotated). Ex. 1003, ¶106.

e. *Claim 1d – said device includes motion sensing operable to distinguish between a plurality of different types of motion,*

Narayanaswami discloses element 1d, including motion sensing. "For example, the base card 20 may be implemented in ... an expanded function shell 25c, providing touch screen, buttons and support for various devices such as

GPS/compass, thermometer, barometer, altimeter, etc." Ex. 1005, 3:40-50. The GPS and altimeter sensors are both capable of sensing motion. Ex. 1003, ¶107. "In a preferred embodiment, additional sensors may be attached to the Wrist Watch device over an interface. Examples may include additional tilt and motion (velocity, direction, speed) sensors." Ex. 1005, 6:15-19. Tilt is a type of motion sensed with sensors such as the ball-in-a-tube sensor disclosed in the '633 patent (Ex. 1001, 5:13-15); sensing velocity is also motion sensing. *Id*. Thus, Narayanaswami discloses motion sensing operable to distinguish between different types of motion. *Id.*, ¶108.

f. *Claim 1e – said device is operable to provide first user-perceivable notification signals that are dependent upon said received first communication signals, and*

Narayanaswami discloses element 1e, noting that "caller Id information may be displayed on the Wrist Watch display when the cell phone that belongs to that person rings." Ex. 1005, 8:3-5. The display of the caller Id information is a "user-perceivable notification signal" dependent on receiving the first communication signals, those associated with a call. Ex. 1003, ¶109.

g. *Claim 1f – said device is operable to provide second user perceivable notification signals that are dependent upon said second communication signals.*

Narayanaswami discloses element 1f. First, receiving a second call and providing the corresponding notification of the call would satisfy this limitation as

described in relation to claim element 1b; the two calls are two events that are of the same type. Ex. 1003, ¶110. Further, Narayanaswami also discloses providing a notification (user perceivable notification signals) of a second event dependent on second communication signals, "[f]or instance, an alarm actually may come from some other source, for example, the user's PC which maintains a list of appointments for the user with one of the appointments having an associated alarm indicating what the appointment was. Then, that information may be input to the Wrist Watch, such that the watch may subsequently activate the alarm at the programmed time, and accordingly indicate the associated text." Ex. 1005, 9:23-31. The alarm activated at the watch at the programmed time is a user-perceivable notification signal of the second event, the appointment. *Id*.

2. Dependent claim 2 – *The watch of claim 1, further comprising an amplifier.*

Narayanaswami discloses an amplifier in Figure 2, labeled as "amp."

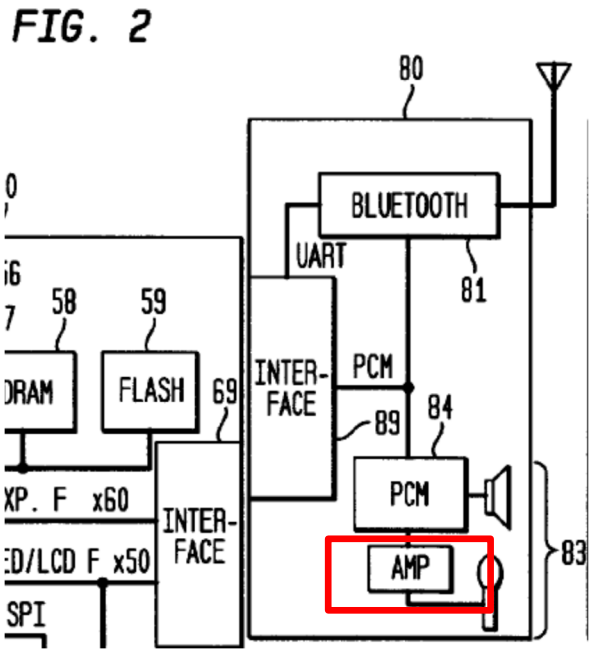

Ex. 1005, Fig. 2 (annotated). The amp is part of "an accessory card, i.e., either card 75 or 80, in the expanded-shell Wrist Watch designs that support PCM audio" that "includes a speaker and a micro phone combination 77, 83 respectively." Ex. 1005, 4:37-48; Ex. 1003, ¶111.

3. Dependent claim 3 – *The watch of claim 1, wherein said user-perceivable notifications signals comprise audible notification signals.*

Narayanaswami discloses claim 3: "In the preferred embodiment, when an alarm is activated, an audible sound is generated." Ex. 1005, 9:66-57; Ex. 1003, ¶112.

4. Dependent claim 4 – *The watch of claim 1, wherein said device further comprises a display.*

Narayanaswami discloses claim 4, stating a "device/appliance (a wrist

watch) capable of wirelessly accessing information and equipped with an interactive user interface and ***high resolution display*** for providing a variety of desktop PC-like functions." Ex. 1005, 2:13-16 (emphasis added); Ex. 1003, ¶113.

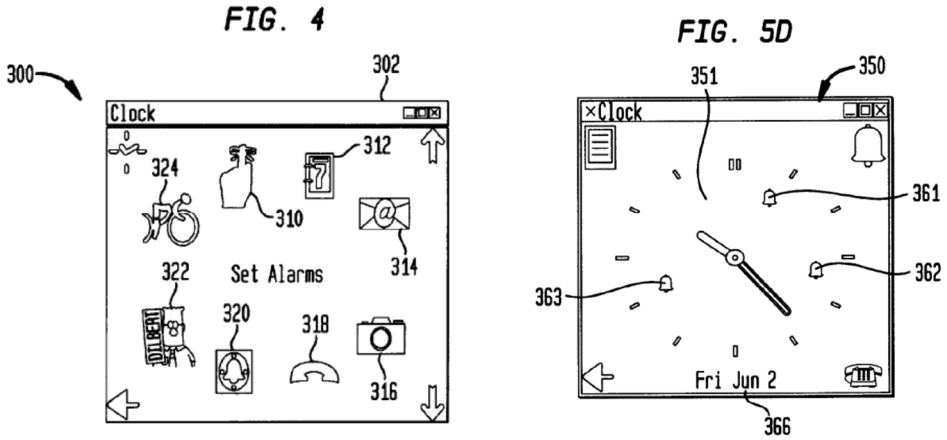

Ex. 1005, Figs. 4, 50.

5. Dependent claim 5 – *The watch of claim 1, wherein said device further comprises a vibrator.*

Narayanaswami discloses claim 5, stating "the Wrist Watch time-keeping/alarm function may be provisioned with the ability to produce a silent alert such as a vibration...." Ex. 1005, 12:26-28. The vibration would be created by the claimed "vibrator." Ex. 1003, ¶114.

6. Dependent claim 6 – *The watch of claim 1, wherein said device further comprises a speaker.*

Narayanaswami discloses claim 6, stating that the watch "includes a speaker and a micro phone combination 77, 83 respectively." Ex. 1005, 4:37-48; Ex. 1003, ¶115.

7. Dependent claim 7 – *The watch of claim 1, wherein said device further comprises an LED.*

Narayanaswami discloses claim 7, stating "[]an interface 69 is provided for a unit 98 housing a high resolution (VGA equivalent) emissive Organic Light Emitting Diode (OLED) high contrast display 100." Ex. 1005, 6:5-8; Ex. 1003, ¶116.

8. Dependent claim 8 – *The watch of claim 1, wherein said device further comprises control circuitry, an input device, and memory.*

Narayanaswami discloses claim 8, stating "FIG. 2 is a detailed block diagram illustrating the hardware architecture of the Wrist Watch system 10. As shown in FIG. 2, the base card 20 includes a first or main card 50 housing the core processing unit, I/O, and memory." Ex. 1005, 3:51-54; Fig. 2 (below). "A user interface manager 255 is provided to process events received from user input devices such as the roller wheel (jog encoder) and touch panel for the appropriate applications." Ex. 1005, 6:64-67. The control circuitry and memory are disclosed by the core processing unit and memory; the input device is disclosed by the roller wheel and touch panel. Ex. 1003, ¶117.

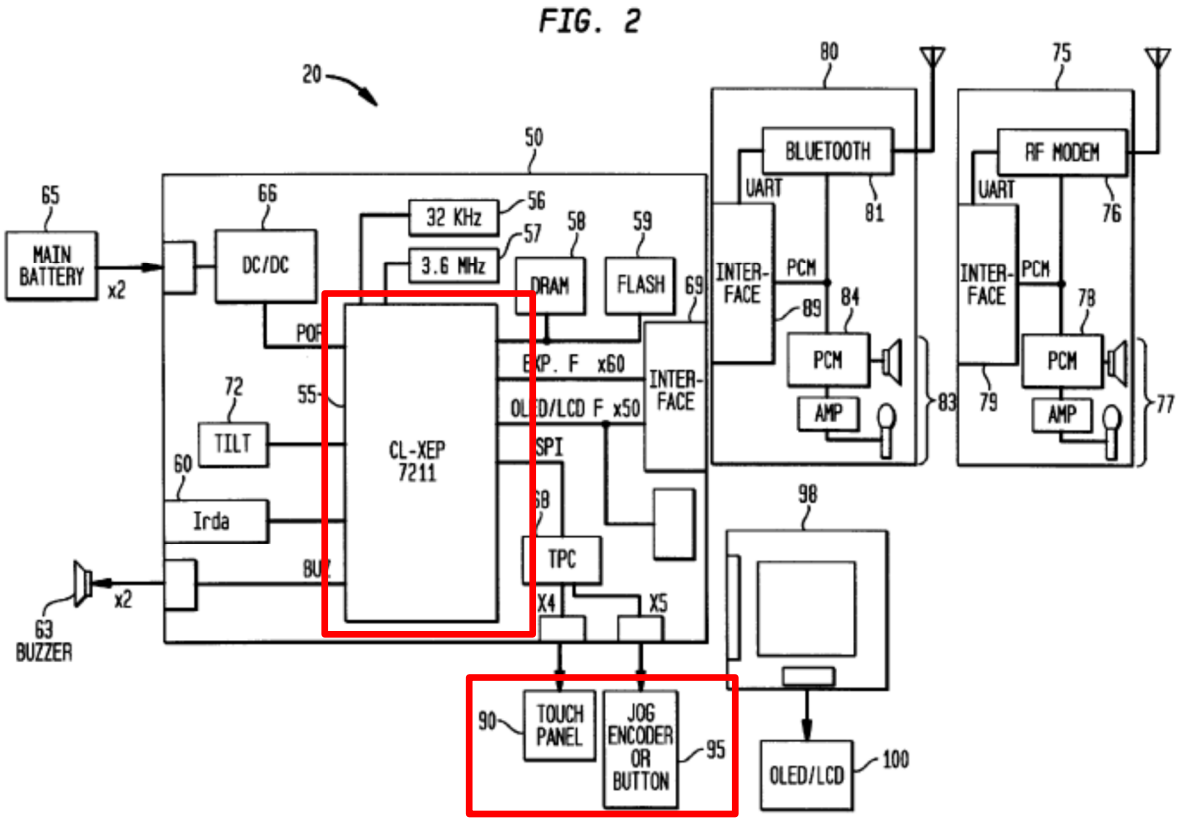

9. Dependent claim 9 – *The watch of claim 1, wherein said device further comprises a display, a speaker, a vibrator, control circuitry, an input device, and memory.*

See claims 4-8; Ex. 1003, ¶118.

10. Dependent claim 10 – *The watch of claim 1, wherein said first user-perceivable signals are indicative of an incoming call.*

See claim 1b.

11. Dependent claim 11 – *The watch of claim 1, wherein said second user-perceivable signals are indicative of a calendar notification.*

See claim 1f. Further, "The synchronization manager 250 is provided to synchronize data between the Wrist Watch and the other devices. Particularly, it

receives the data from the communication channel and operates in conjunction with the right application to decode the sent data and update the data for the application receiving the data. An example of this would be an update to a calendar event." *Id.*, 7:3-9; Ex. 1003, ¶120.

12. Dependent claim 12 – *The watch of claim 1, wherein said second user-perceivable signals are indicative of a reminder.*

See claim 1f. Narayanaswami explicitly discusses reminders after stopping an alarm (therefore a second user-perceivable signal): "One feature in particular enabled by the present invention is the facility by which a user may stop the alarm, select a snooze option where the user will receive subsequent reminders (i.e., the alarm to activate) after a predefined time interval …." 8:28-32. Further, one of skill in the art would understand that a reminder can be stored as a calendar entry and thus Narayanaswami discloses that the second event is indicative of a reminder or at least renders it obvious. Ex. 1003, ¶121.

13. Dependent claim 13 – *The watch of claim 1, wherein said second user-perceivable signals are indicative of a missed call.*

Narayanaswami discloses claim 13, stating, "[i]f the user does not interact with the watch at all when the alarm is activated, this may mean either: 1) the user did not hear the alarm although the watch is on the wrist, or 2) the watch is not on the user's wrist at all. The watch distinguishes these two cases by periodically monitoring the tilt sensor 72 (FIG. 2) on the watch. If the watch is on the user's

wrist, then the alarm will automatically revert to the snooze setting after a preset time interval." Ex. 1005, 11:13-20. One of skill in the art would understand that Narayanaswami treats calls as an event that triggers a type of alert or alarm and that if the user does not respond to the call, then the watch will provide an alarm at a preset time after the call is missed. Ex. 1003, ¶122. Further, it would be obvious to set such an alarm as a result of missing a call so that the user is made aware that the call had been received but was unanswered. *Id.*

14. Dependent claim 14 – *The watch of claim 1, wherein said first user-perceivable signals are indicative of an incoming call and said second user-perceivable signals are indicative of a calendar notification.*

See claim 1 and 11; Ex. 1003, ¶123.

15. Dependent claim 15 – *The watch of claim 1, wherein said first user-perceivable signals are indicative of an incoming call and said second user-perceivable signals are indicative of a reminder.*

See claims 1 and 12.

16. Dependent claim 16 – *The watch of claim 1, wherein said first user-perceivable signals are indicative of an incoming call and said second user-perceivable signals are indicative of a missed call.*

See claims 1 and 13.

17. Dependent claim 17 – *The watch of claim 1, wherein said first user-perceivable signals are indicative of an incoming call, said second user-perceivable signals are indicative of a*

reminder, and said device is configured to receive third wireless communication signals associated with a third event.

See claims 1 and claim 12. Further Narayanaswami discloses the "third event" and corresponding user-perceivable signals of claim 17. For instance, receiving a third call and providing a notification of the third call would satisfy claim 17. Ex. 1003, ¶126 Further, Narayanaswami discloses additional types of events that trigger notifications: "Other applications may include those enabling the receipt of excerpts of personalized data, such as traffic information, weather reports, school closings, stock reports, sports scores, etc., from the world wide web. These excerpts may be received as notifications or alarms on the Wrist Watch system 10." Ex. 1005, 7:58-63; *Id*.

18. Dependent claim 18 – ***The watch of claim 1, wherein at least one of said plurality of different types of motion is a human motion.***

See claims 1d and 13. In particular, "the tilt sensor 72" of Narayanaswami monitors the motion of the user's wrist to determine whether the user is wearing the watch. Ex. 1003, ¶127.

19. Dependent claim 22 – The watch of claim 1, wherein said device is operable to send wireless communication signals to said mobile telephonic device.

Narayanaswami discloses claim 22, stating "[r]eferred to herein as the 'Wrist Watch' 10, the system looks like a regular watch but is capable of receiving

information from adjunct devices such as a PC, a mobile computer, other pervasive devices being carried by the user and directly from a network via a wireless communications mechanism." Ex. 1005, 3:28-33. "Thus, this application software enables communication between the other device and the Wrist Watch by receiving/displaying the data and transmitting back information sent from the Wrist Watch." Ex. 1005, 7:67-8:3. Thus, Narayanaswami discloses wherein the device is operable to send wireless communication signals to the mobile phone. Ex. 1003, ¶128.

20. Dependent claim 27 – ***The watch of claim 1, wherein said device is operable to receive third wireless communication signals associated with a third event, wherein each of said first event, second event, and third event is different, and said device is operable to provide third user-perceivable notification signals that are dependent upon said third wireless communication signals.***

See claims 1 and 17. As noted above in relation to claims 1 and 17, Narayanaswami discloses providing notifications of events that are different, e.g., a series of missed calls, and events that are of different types, e.g., a missed call and a reminder. Ex. 1003, ¶129.

21. Dependent claim 29 – ***The watch of claim 27, wherein said first user-perceivable signals are indicative of an incoming call, said second user-perceivable signals are indicative of a reminder, and said third user-perceivable signals are indicative of a missed call.***

See claims 12, 16 and 27.

22. Dependent claim 35 – *The watch of claim 27, wherein said device is operable to send wireless communication signals to said mobile telephonic device.*

See claims 22 and 27.

B. Ground 2: Claims 19-21, 23-26, 28, 30-34, and 36-39 are unpatentable as obvious over Narayanaswami and Vock and further in view of Nokia 8890 User Guide

The combination of Narayanaswami and Vock discloses most of the elements of these dependent claims. However, the features not explicitly disclosed by the combination were common in mobile phones at the time of the alleged invention and are disclosed by the combination of Narayanaswami, Vock, and the Nokia 8890 User Guide, which renders claims 19-21, 23-26, 28, 30-34, and 36-39 obvious.

1. Dependent claim 19 – *The watch of claim 1, wherein said first user-perceivable signals are indicative of a voice message.*

Nokia User Guide discloses claim 19, "[w]hen you receive a voice message, your phone lets you know by beeping, displaying an icon on the screen, or showing a text message." Ex. 1008, 44; Ex. 1003, ¶133. As described above in Section VI.A, it would have been obvious to incorporate the voice message feature of the Nokia wireless phone into the Narayanaswami smart watch. *Id*.

2. Dependent claim 20 – *The watch of claim 1, wherein said first user-perceivable signals are indicative of a text message.*

Nokia User Guide discloses claim 20, "[w]hen you receive a text message, the phone displays Message received and the ✉ indicator, and makes a sound." Ex. 1008, 81; Ex. 1003, ¶134. As described above, it would have been obvious to incorporate the text message feature of the Nokia wireless phone into the Narayanaswami smart watch. *Id*.

3. Dependent claim 21 – *The watch of claim 1, wherein said device is operable to allow a user to select a type of user-perceivable signal for said first user-perceivable signals that is different than a type of user-perceivable signal for said second user-perceivable signals.*

See claims 19 and 20. Nokia User Guide discloses, "[a]ssign a ringing tone to a caller group." Ex. 1008, 63. Further, Nokia User Guide discloses:

> **Message alert tone**
>
> This option sets the tone your phone makes when you get a text message.
>
> 1 Press **Menu** 3.
> 2 Scroll to the profile whose message alert tone you want to set, then press **Options**.
> 3 Scroll to **Customize**, then press **OK**.
> 4 Scroll to **Message alert tone**, then press **Select**.
> 5 Scroll through the tones until you hear one you like, then press **OK**.

Ex. 1008, 62; Ex. 1003, ¶135. Thus, a user could select different tones, which are user-perceivable signals, and different types of tones for different types of events, such as, for example, selecting a different type of tone for a voice call and for a text message. *Id.*

4. Dependent claim 23 – *The watch of claim 22, wherein said wireless communication signals operable to be sent to said*

mobile telephonic device comprise wireless communication signals to answer an incoming call.

See claim 22, noting that Narayanaswami discloses "transmitting back information sent from the Wrist Watch." Ex. 1005, 7:67-8:3. Thus, Narayanaswami discloses sending wireless communication signals from the watch to the mobile device. Ex. 1003, ¶136. Further, Nokia User Guide discloses "[w]hen someone calls you, the phone alerts you (see 'Ringing options' on page 60) and Call flashes on the display. To answer, press any key...." Ex. 1008, 19; *Id*. It would have been obvious to provide input to the Narayanaswami smart watch to answer a call, and in response to send signals from the smart watch to the mobile device instructing the mobile device to answer the incoming call. *Id*.

5. Dependent claim 24 – ***The watch of claim 22, wherein said wireless communication signals operable to be sent to said mobile telephonic device comprise voice signals.***

See claim 22. Further, Nokia User Guide discloses, "[w]hen someone calls you, the phone alerts you (see 'Ringing options' on page 60) and Call flashes on the display. To answer, press any key...." Ex. 1008, 19; Ex. 1003, ¶137. Thus, the Nokia mobile phone is able to answer a call that includes electronic voice signals. *Id.* Narayanaswami, discloses a microphone to "record voice input," which could be further used to capture voice input for a call *See* Ex. 1005, 4:41-48. It would have been obvious to send these voice signals from a smart watch, such as the

watch disclosed in Narayanaswami, to the mobile device, thus allowing the user to conduct a voice call via the smart watch. *Id*.

6. Dependent claim 25 – ***The watch of claim 22, wherein said wireless communication signals operable to be sent to said mobile telephonic device comprise wireless communication signals to answer an incoming call and wireless communication signals comprising voice signals.***

See claims 23 and 24.

7. Dependent claim 26 – ***The watch of claim 25, wherein said wireless communication signals comprising voice signals comprise voice signals operable to be utilized by said mobile telephonic device for an active call.***

See claim 24. The call described in relation to claim 24 would be considered an "active call." Ex. 1003, ¶139.

8. Dependent claim 28 – ***The watch of claim 27, wherein said device is operable to allow a user to select different types of user-perceivable signals for each of said first user-perceivable signals, said second user-perceivable signals, and said third user-perceivable signals.***

See claim 21. Further, it would have been obvious to assign different types of user-perceivable signals, such as the visual or audible signals disclosed by the Nokia User Guide, in the Narayanaswami smart watch. Ex. 1003, ¶140. For example, a user could select different tones, which are user-perceivable signals, and different types of tones for each different type of event, such as, for example, selecting a different type of tone for a voice call, a text message, or a reminder. *Id.*

9. Dependent claim 30 – ***The watch of claim 27, wherein said first user-perceivable signals are indicative of an incoming call, said second user-perceivable signals are indicative of a reminder, and said third user-perceivable signals are indicative of a voice message.***

See claims 19 and 23. Further, Nokia User Guide discloses a reminder as recited in claim 30: "The calendar keeps track of reminders, calls you need to make, meetings, and birthdays. It can even sound an alarm when it's time for you to make a call or go to a meeting." Ex. 1008, 96. It would have been obvious to incorporate the reminders disclosed in the Nokia User Guide with the Narayanaswami smart watch. Ex. 1003, ¶141.

10. Dependent claim 31 – ***The watch of claim 27, wherein said first user-perceivable signals are indicative of an incoming call, said second user-perceivable signals are indicative of a reminder, and said third user-perceivable signals are indicative of a text message.***

See claims 20, 23, and 30.

11. Dependent claim 32 – ***The watch of claim 27, wherein said first user-perceivable signals are indicative of an incoming call, said second user-perceivable signals are indicative of a missed call, and said third user-perceivable signals are indicative of a voice message.***

See claims 19 and 23, and Ground 1, claim 13. Also, Nokia User Guide discloses, "[y]our phone saves the numbers and names (if available) of the last 10 callers that have tried unsuccessfully to reach you." Ex. 1008, 42. Thus, the phone provides a user-perceivable signal of a missed call and it would have been obvious

to incorporate this notification into the Narayanaswami smart watch. Ex. 1003, ¶143.

12. **Dependent claim 33 –** ***The watch of claim 27, wherein said first user- perceivable signals are indicative of an incoming call, said second user-perceivable signals are indicative of a missed call, and said third user-perceivable signals are indicative of a text message.***

See claims 20, 23, and 32.

13. **Dependent claim 34 –** ***The watch of claim 27, wherein said first user-perceivable signals are indicative of an incoming call, said second user-perceivable signals are indicative of a voice message, and said third user-perceivable signals are indicative of a text message.***

See claims 19, 20, and 23.

14. **Dependent claim 36 –** ***The watch of claim 35, wherein said wireless communication signals operable to be sent to said mobile telephonic device comprise wireless communication signals to answer an incoming call.***

See claim 23.

15. **Dependent claim 37 –** ***The watch of claim 35, wherein said wireless communication signals operable to be sent to said mobile telephonic device comprise voice signals.***

See claim 23.

16. **Dependent claim 38 –** ***The watch of claim 35, wherein said wireless communication signals operable to be sent to said mobile telephonic device comprise wireless communication signals to answer an incoming call and wireless communication signals comprising voice signals.***

See claim 23.

17. Dependent claim 39 – *The watch of claim 38, wherein said wireless communication signals comprising voice signals comprise voice signals operable to be utilized by said mobile telephonic device for an active call.*

See claim 23.

C. Ground 3: Claims 1-10, 13, 16, 18, 19, 22-27, 35-39 are unpatentable as obvious over Fujisawa in view of Vock

Fujisawa was filed as a PCT application on June 21, 2001, published on August 22, 2002, and discloses a smart watch that communicates with a mobile telephone to provide notifications about calls and other functionality to the user. Fujisawa discloses all elements of the independent claim, other than a two-piece band with a buckle and motion sensing, and discloses most elements of the dependent claims. Vock discloses the two-piece band and motion sensing. The combination of Fujisawa and Vock renders claims 1-10, 13, 16, 18, 19, 22-27, 35-39 obvious.

1. Independent claim 1

a. *Claim 1 Preamble – A watch for use with a mobile telephonic device that provides notification of an incoming call, said watch comprising:*

Fujisawa discloses, "[w]hen there is an incoming call to a mobile telephone, it sends an incoming call notification signal to a watch-shaped information processing device." Ex. 1006, Abstract; Ex. 1003, ¶151.

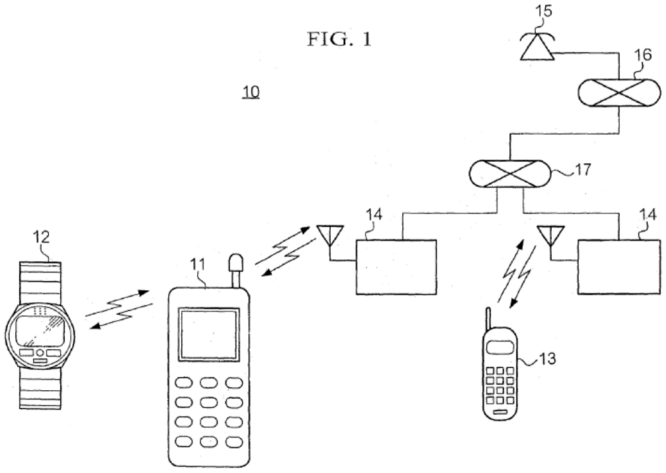

Ex. 1006, Fig. 1.

b. *Claim 1a – a watch band; a second watch band; a buckle, wherein said buckle is couple to said second watch band; and*

Fujisawa and Vock discloses claim 1a. Fujisawa discloses a watch band but does not disclose a two-piece watch band with a buckle:

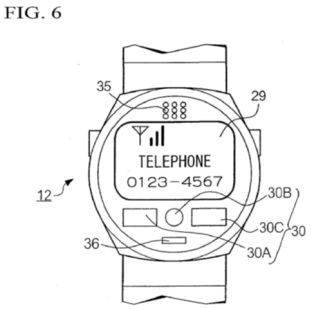

Ex. 1006, Fig. 6. Vock discloses a two-piece band with a buckle to couple the two bands together:

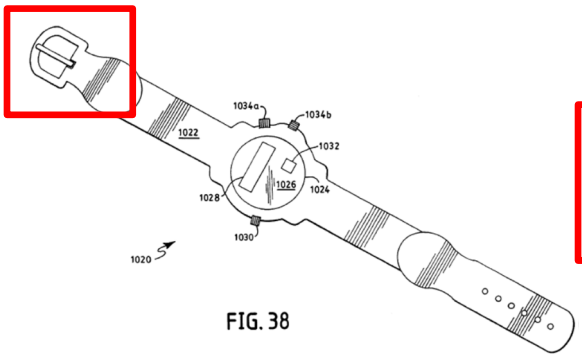

FIG. 38

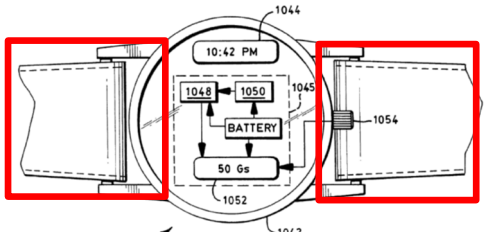

FIG. 39

Ex. 1007, Figs. 38, 39 (annotated); Ex. 1003, ¶152. Figure 39 (above right) demonstrates that the smart watch of Vock includes two bands—one connected to the lug on the left, and one to the right. And Figure 38 (above left) discloses the buckle that affixes the bands to one another. It would have been obvious to incorporate the two-band strap with a buckle disclosed in Vock with the Fujisawa smart watch, at least because this is how watch bands have been used for decades. *Id*.

c. *Claim 1b – a device operable to receive first wireless communication signals associated with a first event and second wireless communication signals associated with a second event from said mobile telephonic device, wherein said first event and second event are different,*

Fujisawa discloses claim 1b, including a first event—an incoming call: "In the watch-shaped information processing device 12, the incoming call notification signal is received in the antenna unit 21 and the receiver circuit 23 demodulates the incoming call notification signal to the received data DRX (step S6)." Ex. 1006, [0155]; ex. 1003, ¶153. The notification is received over the ACL link which is the

first wireless communication signal. Ex. 1006, [0237]-[238]; Ex. 1003, ¶153. To the extent receiving the wireless signals requires receiving them through the mobile phone, it would have been obvious to do so as that would simplify the requirements of the watch, which as disclosed is more capable than would be necessary. *Id*.

Fujisawa also discloses a second event. First, receiving two calls, one after the other would satisfy this limitation. Ex. 1003, ¶154. Second, to the extent the claim requires the second event is of a different type that the first, Fujisawa discloses a different second event—a missed call: "As shown in FIG. 19, during this process, the caller's telephone number and a message 'recording caller's message' are shown on the display unit 29 of the watch-shaped information processing device 12A to inform the user that the call is currently leaving a message." Ex. 1006, [0272]. *Id*. The voice message is subsequently transmitted over an SCO link, the second wireless communication signal. Ex. 1006, [0266], [270]; Ex. 1003, ¶154.

d. *Claim 1c – said device includes a battery*,

Fujisawa discloses claim 1c, stating "[a] battery 34 supplies power to components of the watch-shaped information processing device 12." Ex. 1006, [0137]; Ex. 1003, ¶155.

e. *Claim 1d – said device includes motion sensing operable to distinguish between a plurality of different types of motion,*

Fujisawa does not disclose motion sensing, but Vock discloses claim 1d. Ex. 1003, ¶156. Vock discloses, "[t]he watch 1020 also holds a power sensing unit 1032...." Ex. 1007, 44:33-34. "The power sensing unit [] provides a measure of the intensity or how 'hard' the user played during a particular activity." *Id.*, 6:15-17. The power sensing unit may include, for example, one or more microphones or accelerometers. *Id.,* 44:55-56. The watch may also include an altimeter to provide a "dual drop distance and-power watch embodiment." *Id.,* 44:66-45:5. Thus, the combination of Fujisawa and Vock discloses motion sensing operable to distinguish between different types of motion. *Id*.

f. *Claim 1e – said device is operable to provide first user-perceivable notification signals that are dependent upon said received first communication signals, and*

Fujisawa discloses that the notification is dependent on the received communication signals as recited in claim 1e. "In more detail, in order to notify the user of incoming call, the central control circuit 25 controls the electronic sound unit 26 to produce a buzzer sound or an electronic sound, the vibrator 27 to produce a vibration, or the light emitting unit 28 to blink light emitting device such as an LED. control circuit 25 also extracts the telephone number of the caller from the received data DRX, and displays on the display unit 29 the telephone number

and other related information, if any information. such as name of the caller is registered in advance." Ex. 1006, [0156]; Ex. 1003, ¶157.

g. *Claim 1f – said device is operable to provide second user perceivable notification signals that are dependent upon said second communication signals.*

See claim 1b. Further, Fujisawa discloses that in response to the first event, "[s]hown on the display unit 29 in FIG. 6 are the telephone number of the caller and a phrase meaning call incoming." Ex. 1006, [0156]. Ex. 1003, ¶158. In response to the second event, the watch displays "recording caller's message." Ex. 1006, [0272]. *Id*. Both notifications are dependent on the corresponding first and second communication signals. *Id*.

2. Dependent claim 2 – *The watch of claim 1, further comprising an amplifier.*

Fujisawa discloses claim 2, noting that the watch includes multiple amplifiers, including "power amplifier 24F." Ex. 1006, [0145]; Ex. 1003, ¶159.

3. Dependent claim 3 – *The watch of claim 1, wherein said user-perceivable notifications signals comprise audible notification signals.*

Fujisawa discloses claim 3, stating, "[i]n more detail, in order to notify the user of incoming call, the central control circuit 25 controls the electronic sound unit 26 to produce a buzzer sound or an electronic sound...." Ex. 1006, [0156]; Ex. 1003, ¶160.

4. Dependent claim 4 – *The watch of claim 1, wherein said device further comprises a display.*

Fujisawa discloses claim 4, noting that the watch includes a "display unit 29." Ex. 1006, [0133]; Ex. 1003, ¶161.

FIG. 6

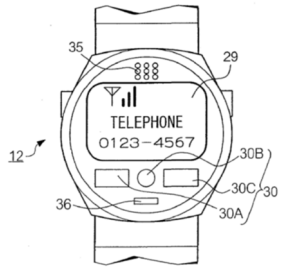

Ex. 1006, Fig. 6.

5. Dependent claim 5 – *The watch of claim 1, wherein said device further comprises a vibrator.*

Fujisawa discloses that the watch includes a "vibrator 27." Ex. 1006, [0133]; Ex. 1003, ¶162.

6. Dependent claim 6 – *The watch of claim 1, wherein said device further comprises a speaker.*

Fujisawa discloses that the watch includes a "speaker 35." Ex. 1006, [0139]; Ex. 1003, ¶163.

7. Dependent claim 7 – *The watch of claim 1, wherein said device further comprises an LED.*

Fujisawa discloses that the watch includes a "light emitting unit 28 has an LED or other light emitting device." Ex. 1006, [0133]; Ex. 1003, ¶164.

8. Dependent claim 8 – *The watch of claim 1, wherein said device further comprises control circuitry, an input device, and memory.*

Fujisawa discloses, "[t]he central control circuit 25 controls components of the watch-shaped information processing device 12...." Ex. 1006, [0132]. Further, "An external input unit 30 is equipped with buttons, a touch panel, and so on." Ex. 1006, [0134]. And "[a] nonvolatile memory 33 stores various data and programs." Ex. 1006, [0136]. Thus Fujisawa discloses that the watch comprises control circuitry, an input device, and memory. Ex. 1003, ¶165.

9. Dependent claim 9 – *The watch of claim 1, wherein said device further comprises a display, a speaker, a vibrator, control circuitry, an input device, and memory.*

See claims 4-8.

10. Dependent claim 10 – *The watch of claim 1, wherein said first user-perceivable signals are indicative of an incoming call.*

See claim 1b.

11. Dependent claim 13 – *The watch of claim 1, wherein said second user-perceivable signals are indicative of a missed call.*

See claim 1b, second event.

12. Dependent claim 16 – *The watch of claim 1, wherein said first user-perceivable signals are indicative of an incoming call and said second user-perceivable signals are indicative of a missed call.*

See claims 1 and 13.

13. Dependent claim 18 – *The watch of claim 1, wherein at least one of said plurality of different types of motion is a human motion.*

See claim 1d. The power and drop described in Vock are measures of the user's motion. Ex. 1003, ¶170. For example, Vock discloses "this embodiment takes advantage of the fact that many Sports include waving and movement of the user's arm (e.g., tennis and volley-ball); and thus power is determined through the techniques herein to inform the user of this performance data, through the watch 1020." Ex. 1007, 44:43-47.

14. Dependent claim 19 – *The watch of claim 1, wherein said first user-perceivable signals are indicative of a voice message.*

"On the other hand, when the central control circuit 25A receives "message playing operation by list" (step Sd2: playing operation by list), it sees the address management table AMT and acquires all the readout addresses for the caller's messages." Ex. 1006, [0291].

FIG. 23

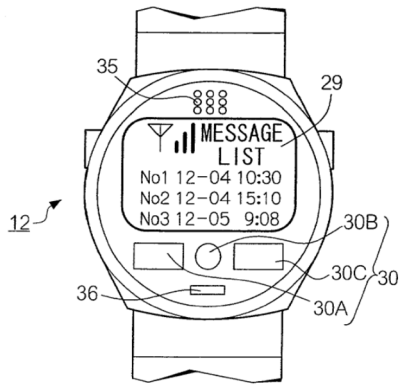

Id., Fig. 23. "Using the readout addresses, the central control circuit 25A reads only the incoming call time data and the caller data in the nonvolatile memory 33, and displays them on the display unit 29 (step Sd5)." Ex. 1006, [0290]. Thus, Fujisawa discloses that the user-perceivable signals are indicative of a voice message. Ex. 1003, ¶171.

15. Dependent claim 22 – *The watch of claim 1, wherein said device is operable to send wireless communication signals to said mobile telephonic device.*

Fujisawa discloses that the watch can send wireless communication signals to the mobile phone. For example, "[w]hen there is an incoming call to the mobile telephone 11 or llA, communication links between the caller's telephone and the mobile telephone 11 or llA and between the mobile telephone 11 or llA and the watch-shaped information processing device 12 or 12A are established. Using the links, the user makes telephone conversation with the caller." Ex. 1006, [0359]. As another example, "[t]he ACL link is an asynchronous communication link defined in the bluetooth technical specification." Ex. 1006, [0188]. "The asynchronous data here can be control data used for various instructions and controls among the watch-shaped information processing device 12A and the mobile telephone llA.." *Id.*, [0189]. Ex. 1003, ¶172.

16. Dependent claim 23 – *The watch of claim 22, wherein said wireless communication signals operable to be sent to said*

mobile telephonic device comprise wireless communication signals to answer an incoming call.

See claim 22 in relation to an incoming call. Fujisawa further discloses, "[i]n the above explanation for the first, second, and third embodiments, another modification may be possible by which the user can perform a telephone communication by using the microphone 36 and the speaker 35 of the watch-shaped information processing device 12 or 12A as follows." Ex. 1006, [0359]; Ex. 1003, ¶173.

17. Dependent claim 24 – ***The watch of claim 22, wherein said wireless communication signals operable to be sent to said mobile telephonic device comprise voice signals.***

See claims 22 and 23. Further, Fujisawa discloses "[c]ommunication links between the caller's telephone and the mobile telephone 11 or 11A and between the mobile telephone 11 or 11A and the watch-shaped information processing device 12 or 12A are established. Using the links, the user makes telephone conversation with the caller." Ex. 1006, [0359]; Ex. 1003, ¶174.

18. Dependent claim 25 – ***The watch of claim 22, wherein said wireless communication signals operable to be sent to said mobile telephonic device comprise wireless communication signals to answer an incoming call and wireless communication signals comprising voice signals.***

See claims 23 and 24.

19. Dependent claim 26 – ***The watch of claim 25, wherein said wireless communication signals comprising voice signals***

comprise voice signals operable to be utilized by said mobile telephonic device for an active call.

See claims 24 and 25.

20. Dependent claim 27 – ***The watch of claim 1, wherein said device is operable to receive third wireless communication signals associated with a third event, wherein each of said first event, second event, and third event is different, and said device is operable to provide third user-perceivable notification signals that are dependent upon said third wireless communication signals.***

See claim 1 in relation to the first and second events. Fujisawa also discloses a third event. For example, Fujisawa discloses that a user can receive an email on the watch along with a corresponding notification:

FIG. 28

"FIG. 28 shows a display screen after an e-mail message is selected. In FIG. 28, the user sees that that an e-mail message, and title and part of the message." Ex. 1006, [0348]. Thus, Fujisawa discloses receiving three different events and corresponding communication signals. Ex. 1003, ¶177.

21. Dependent claim 35 – ***The watch of claim 27, wherein said device is operable to send wireless communication signals to said mobile telephonic device.***

See claims 22 and 27.

22. Dependent claim 36 – The watch of claim 35, wherein said wireless communication signals operable to be sent to said mobile telephonic device comprise wireless communication signals to answer an incoming call.

See claims 23 and 35.

23. Dependent claim 37 – The watch of claim 35, wherein said wireless communication signals operable to be sent to said mobile telephonic device comprise voice signals.

See claims 24 and 35.

24. Dependent claim 38 – The watch of claim 35, wherein said wireless communication signals operable to be sent to said mobile telephonic device comprise wireless communication signals to answer an incoming call and wireless communication signals comprising voice signals.

See claims 27 and 36.

25. Dependent claim 39 – ***The watch of claim 38, wherein said wireless communication signals comprising voice signals comprise voice signals operable to be utilized by said mobile telephonic device for an active call.***

See claims 24 and 38.

D. Ground 4: Claims 11, 12, 14, 15, 17, 20, 21, and 28-34 are unpatentable as obvious over Fujisawa and Vock and further in view of Nokia 8890 User Guide

The combination of Fujisawa and Vock discloses most of the elements of these dependent claims. However, the features not explicitly disclosed by the combination were common in mobile phones at the time of the alleged invention and are disclosed by the combination of Fujisawa, Vock, and the Nokia 8890 User Guide, which renders claims 11, 12, 14, 15, 17, 20, 21, and 28-34 obvious.

1. Dependent claim 11 – *The watch of claim 1, wherein said second user-perceivable signals are indicative of a calendar notification.*

Nokia User Guide discloses, "The calendar keeps track of reminders, calls you need to make, meetings, and birthdays. It can even sound an alarm when it's time for you to make a call or go to a meeting." Ex. 1008, 96. The "alarm" is a user-perceivable signal indicative of a calendar notification. Ex. 1003, ¶185.

2. Dependent claim 12 – *The watch of claim 1, wherein said second user-perceivable signals are indicative of a reminder.*

See claim 11. One type of item that the calendar can keep track of is a "reminder." Ex. 1003, ¶186.

3. Dependent claim 14 – *The watch of claim 1, wherein said first user-perceivable signals are indicative of an incoming call and said second user-perceivable signals are indicative of a calendar notification.*

See claim 11, and Ground 3, claim 1.

4. Dependent claim 15 – ***The watch of claim 1, wherein said first user-perceivable signals are indicative of an incoming call and said second user-perceivable signals are indicative of a reminder.***

See claim 12, and Ground 3, claim 1.

5. Dependent claim 17 – ***The watch of claim 1, wherein said first user-perceivable signals are indicative of an incoming call, said second user-perceivable signals are indicative of a reminder, and said device is configured to receive third wireless communication signals associated with a third event.***

See claim 12, and Ground 3, claims 1 and 27.

6. Dependent claim 20 – ***The watch of claim 1, wherein said first user-perceivable signals are indicative of a text message.***

Nokia User Guide discloses, [w]hen you receive a text message, the phone displays Message received and the indicator, and makes a sound." Ex. 1008, 81; Ex. 1003, ¶190. As described above, it would have been obvious to incorporate the text message feature of the Nokia wireless phone into the Fujisawa smart watch. *Id*.

7. Dependent claim 21 – ***The watch of claim 1, wherein said device is operable to allow a user to select a type of user-perceivable signal for said first user-perceivable signals that is different than a type of user-perceivable signal for said second user-perceivable signals.***

See claims 19 and 20. Nokia User Guide discloses, "[a]ssign a ringing tone to a caller group." Ex. 1008, 54. Further, Nokia User Guide discloses:

Message alert tone

This option sets the tone your phone makes when you get a text message.

1 Press **Menu** 3.
2 Scroll to the profile whose message alert tone you want to set, then press **Options**.
3 Scroll to **Customize**, then press **OK**.
4 Scroll to **Message alert tone**, then press **Select**.
5 Scroll through the tones until you hear one you like, then press **OK**.

Ex. 1008, 62; Ex. 1003, ¶191. Thus, a user could select different tones, which are user-perceivable signals, and different types of tones for different types of events, such as, for example, selecting a different type of tone for a voice call and for a text message. *Id.*

8. Dependent claim 28 – *The watch of claim 27, wherein said device is operable to allow a user to select different types of user-perceivable signals for each of said first user-perceivable signals, said second user-perceivable signals, and said third user-perceivable signals.*

See claim 21, and Ground 3, claim 27. Further, it would have been obvious to assign different types of user-perceivable signals, such as the visual or audible signals disclosed by the Nokia User Guide, in the Fujisawa smart watch. Ex. 1003, ¶192. For example, a user could select different tones, which are user-perceivable signals, and different types of tones for each different type of event, such as, for example, selecting a different type of tone for a voice call, a text message, or a reminder. *Id.*

9. Dependent claim 29 – *The watch of claim 27, wherein said first user-perceivable signals are indicative of an incoming*

call, said second user-perceivable signals are indicative of a reminder, and said third user-perceivable signals are indicative of a missed call.

See claim 12, and Ground 3, claims 13 and 23.

10. Dependent claim 30 – ***The watch of claim 27, wherein said first user-perceivable signals are indicative of an incoming call, said second user-perceivable signals are indicative of a reminder, and said third user-perceivable signals are indicative of a voice message.***

See Ground 3, claims 19 and 23. Further, Nokia User Guide discloses "The calendar keeps track of reminders, calls you need to make, meetings, and birthdays. It can even sound an alarm when it's time for you to make a call or go to a meeting." Ex. 1008, 87. It would have been obvious to incorporate the reminder in the Nokia User Guide with the Fujisawa smart watch. Ex. 1003, ¶194.

11. Dependent claim 31 – ***The watch of claim 27, wherein said first user-perceivable signals are indicative of an incoming call, said second user-perceivable signals are indicative of a reminder, and said third user-perceivable signals are indicative of a text message.***

See claims 20 and 30, and Ground 3, claim 23.

12. Dependent claim 32 – ***The watch of claim 27, wherein said first user-perceivable signals are indicative of an incoming call, said second user-perceivable signals are indicative of a missed call, and said third user-perceivable signals are indicative of a voice message.***

See Ground 3, claims 13, 19 and 23.

13. Dependent claim 33 – ***The watch of claim 27, wherein said first user- perceivable signals are indicative of an incoming***

call, said second user-perceivable signals are indicative of a missed call, and said third user-perceivable signals are indicative of a text message.

See claims 20 and 32, and Ground 3, claim 23.

14. Dependent claim 34 – ***The watch of claim 27, wherein said first user-perceivable signals are indicative of an incoming call, said second user-perceivable signals are indicative of a voice message, and said third user-perceivable signals are indicative of a text message.***

See claim 20, and Ground 3, claims 19 and 23.

VIII. Secondary Considerations Cannot Overcome the Strong Evidence of Obviousness

Where, as here, a strong prima facie case of obviousness exists, secondary considerations may not dislodge the final conclusion of obviousness. *See, e.g., Leapfrog Enters., Inc. v. Fisher-Price, Inc.*, 485 F.3d 1157, 1162 (Fed. Cir. 2007). At the institution stage, in light of the "absence of a complete evidentiary record," Petitioner need not further address secondary considerations. *Ranir, LLC v. The Procter & Gamble Co.*, IPR2017-01878, Paper 7 at 32 (Feb. 7, 2018); *accord 3Shape A-S v. Align Tech., Inc.,* IPR2019-00160, Paper 9 at 34 (June 11, 2019) (at the institution stage, "it is premature to determine how much weight to give to … evidence of objective indicia"). This is particularly apposite here, where the Examiner did not rely on any evidence of secondary considerations in allowing the claims of the '633 Patent. *See Zip Top, LLC v. Stasher, Inc.*, IPR2018-01216,

Paper 14 at 37 (Jan. 17, 2019). Petitioner reserves the right to respond to any evidence of secondary considerations that Patent Owner may proffer.

IX. This Petition Should Not Be Discretionarily Denied

The *General Plastics* analysis is inapplicable here as the '633 Patent has not previously been the subject of a post-grant proceeding. Under the "*Fintiv* factors," the Board asserted it may consider parallel litigation, including an early trial date, in determining whether to institute under 35 U.S.C. § 314(a). *NHK Spring Co., Ltd., v. Intri-Plex Technologies, Inc.*, IPR2018-00752, Paper 8 at 19–20 (PTAB Sept. 12, 2018) (precedential); *Apple Inc. v. Fintiv, Inc.*, IPR2020-00019, Paper 11 at 2–3, 6 (PTAB Mar. 20, 2020) (precedential). Those factors favor institution here.

Factor 1 - Whether the Court Granted a Stay or May Grant One if a Proceeding is Instituted. Petitioner intends to move the Court to stay the litigation after filing this Petition. Petitioner is concurrently filing petitions for *inter partes* review challenging every Asserted Claim of the eight other patents at issue in the Underlying Litigation.

The early stage of the litigation and potential simplification (resulting from the Board invalidating claims of the patents-in-suit) weighs against the exercise of discretion. At worst, this factor is neutral because the Board "will not attempt to predict" how the district court will proceed. *Sand Revolution II, LLC v.*

Continental Intermodal Group-Trucking LLC, IPR2019-01393, Paper 24, 7 (PTAB Jun. 16, 2020).

Factor 2 - Proximity of the Court's Trial Date to the Statutory Deadline for a Final Written Decision. "This factor looks at the proximity of the trial date to the date of [FWD] to assess the weight to be accorded a trial date set earlier than the expected [FWD] date." *Shenzhen Carku Tech. Co., Ltd. v. The Noco Co.*, IPR2020-00944, Paper 20 at 61 (PTAB Nov. 12, 2020). The District Court scheduled trial for November 2, 2023, with the notation "[i]f the actual trial date materially differs from the Court's default schedule, the Court will consider reasonable amendments to the case schedule post-Markman that are consistent with the Court's default deadlines in light of the actual trial date," thus indicating the Court recognizes the scheduled date is pursuant to the Court's default schedule and may not be the "actual trial date." *See* Ex. 1014 (Scheduling Order in District Court Litigation), 5, FN 4.

Trial dates are notoriously unreliable and should be an insufficient basis upon which to deny institution. "A court's general ability to set a fast-paced schedule is not particularly relevant," especially where "the forum [i.e., WDTX] itself has not historically resolved cases so quickly." *In re Apple Inc.*, No 20-135, slip op. at 16 (Fed. Cir. Nov. 9, 2020); *DISH Network L.L.C. v. Broadband iTV, Inc.*, IPR2020-01280, Paper 17 at 13-16 (PTAB Feb. 4, 2021). The Federal Circuit

found error in the Board's reliance on the case's scheduled trial date. *In re Apple Inc*., No 20-135, slip op. at 15. It would be error for the Board to speculatively rely upon the current schedule.

Trial date speculation is particularly concerning where the statistics show frequent trial delays in WDTX. "70% of [WDTX] trial dates initially relied upon by the PTAB to deny petitions have slid," as of July 2020. *District Court Trial Dates Tend to Slip After PTAB Discretionary Denials* (Ex. 1014). Such delays impacted the NHK and Fintiv cases, where, after the Board denied institution, associated trial dates were delayed to after the FWD dates—the same WDTX court in Fintiv as is handling the Underlying Litigation against Petitioner. IPR2018-01680, Paper 22 at 17, n. 6 (PTAB Apr. 3, 2019) ("In the district court case running parallel to NHK Spring, the court ultimately moved the trial date back six months, illustrating the uncertainty associated with litigation schedules."); Order on Emergency Motion (Ex. 1015) (Fintiv trial indefinitely, already thirteen months after the FWD would have been due in the associated IPR). In contrast, the Board adhered to the one-year statutory deadline for FWDs prescribed by 35 U.S.C. § 316(a)(11).

So alarming is the frequent trial slippage in the Waco Division of WDTX that it leads to unjust results for petitioners, Thom Tillis, Ranking Member of the U.S. Senate's Subcommittee on Intellectual Property, recently requested the PTO

"undertake a study and review . . . [to] consider whether Fintiv should be modified to account for unrealistic trial scheduling," noting "it is difficult to imagine any plausible justification for the continued reliance on the demonstrably inaccurate trial dates set by the Waco Division." Tillis Ltr to USPTO re Fintiv Modification (Ex. 1016).

The Board has repeatedly been persuaded by the uncertainty in litigation timelines regardless of a set trial date, especially when within a few months of the expected FWD. Sand Revolution, Paper 24 at 8-9; see also IPR2021-00255, Paper 22 at 11-12 (PTAB Aug. 23, 2021) (declining to exercise discretionary denial when the trial date was set for only two months after the expected FWD). These same uncertainties are present and equally as persuasive here.

Factor 3 - Investment in the Parallel Proceeding by the Court and the Parties. The parties have made only minimal investment in this litigation to date. Plaintiff's infringement contentions identifying the asserted claims were served on May 6, 2022. As the Board explained in *Fintiv*, where "the petitioner filed the petition expeditiously, such as promptly after becoming aware of the claims being asserted, this fact has weighed against exercising the authority to deny institution under *NHK*." *Apple Inc. v. Fintiv, Inc*., IPR2020-00019, Paper 11 at 1 (PTAB Mar. 20, 2020) (precedential). Further, fact discovery will not open until October 31, 2022, opening expert reports are not due until June 1, 2023, and no substantive

orders have been issued. *See* Ex. 1013. This weighs in favor of institution. *See, e.g., Nokia of America Corp and Ericsson Inc. v. IPCOM, GMBH & Co. KG*, IPR2021-00533, Paper 10 at (PTAB Aug. 12, 2021) ("If, at the time of institution, the district court has not issued substantive orders related to the patent at issue in the petition, this fact weighs against exercising discretion to deny institution.").

Factor 4 - Overlap Between Issues Raised in the Petition and in the Parallel Proceeding. Petitioner challenges all claims of the '633 Patent in this petition. Further, Petitioner stipulates that if the Board institutes the Petition, then Apple will not seek resolution in the District Court of any ground of invalidity relied upon herein. In so stipulating, Apple seeks to avoid multiple proceedings addressing the validity of the '633 Patent based on any of the same grounds. This factor weighs in favor of institution.

Factor 5 - Whether the Petitioner and the Defendant in the Parallel Proceeding are the Same Party. The Parties are the same in the Underlying Litigation. However, members of the Board have noted *Fintiv* addresses only the scenario in which the petitioner is unrelated to a defendant in a parallel proceeding, finding this should weigh against denying institution, but that *Fintiv* "says nothing about situations in which the petitioner is the same as, or is related to, the district court defendant." *Cisco Sys., Inc. v. Ramot at Tel Aviv Univ. Ltd*., IPR2020-00122, Paper 15, 10 (PTAB May 15, 2020) (APJ Crumbley,

dissenting) (noting that disfavoring a "defendant in the district court" is "contrary to the goal of providing district court litigants an alternative venue to resolve questions of patentability").

Factor 6 - Other Circumstances that Impact the Board's Exercise of Discretion, Including the Merits. As discussed in detail above, every element of the claims of the '633 Patent is either expressly shown in the prior art or is obvious in view of well-known art. Director Vidal stated her recent memorandum, "the PTAB will not deny institution based on *Fintiv* if there is compelling evidence of unpatentability. Ex. Ex. 1017, 4-5.

X. Conclusion

In view of the foregoing, a reasonable likelihood exists that Petitioner will prevail with respect to claims 1-39 of the '633 Patent. Accordingly, the Board should institute this IPR.

XI. Mandatory Notices

A. Real Parties in Interest (37 C.F.R. § 42.8(b)(1))

Apple Inc. is the real party in interest for this Petition.

B. Related Matters (37 C.F.R. § 42.8(b)(2))

The '633 Patent is asserted against Petitioner in *Mullen Industries LLC v. Apple Inc.*, No. 6:22-cv-00145 (W.D. Tex. Feb. 9, 2022).

C. Payment of Fees (37 C.F.R. § 42.103)

This Petition requests review of 39 (1-39) claims of the '633 Patent and is accompanied by payment of $62,875, which includes the $19,000 IPR request fee, $7,125 for 19 additional claims, the $22,500 post-institution fee, and $14,250 for 19 additional claims. *See* 37 C.F.R. § 42.15(a). Thus, this Petition meets the fee requirements under 35 U.S.C. § 312(a)(1). The Board is hereby authorized to charge any additional fees required by this action to Deposit Account No. 20-1430.

D. Power of Attorney (37 C.F.R. § 42.10)

Powers of attorney are filed herewith in accordance with 37 C.F.R. § 42.10(b).

E. Designation of Lead and Backup Counsel (37 C.F.R. § 42.8(b)(3)) and Service Information (37 C.F.R. § 42.8(b)(4))

Lead Counsel	Backup Counsel
John C. Alemanni Reg. No. 47,384 4208 Six Forks Road, Suite 1400 Raleigh, NC 27609 Office: 919.420.1724 Fax: 919.420.1800 JAlemanni@kilpatricktownsend.com	Carl E. Sanders Reg. No. 57,203 4208 Six Forks Road, Suite 1400 Raleigh, NC 27609 Office: (919) 420-1728 Fax: (919) 420-1800 csanders@kilpatricktownsend.com

Petitioner may be served via email to its lead and backup counsel at the email addresses above and to: Apple-Mullen-IPR@kilpatricktownsend.com.

Respectfully submitted,
.

By: */John C. Alemanni/*
John C. Alemanni
Registration No. 47,384
Lead Counsel for Petitioner

CERTIFICATE OF WORD COUNT

The undersigned certifies pursuant to 37 C.F.R. § 42.24(d) that the foregoing Petition for *Inter Partes* Review excluding any table of contents, table of authorities, certificates of service or word count, or appendix of exhibits or claim listing, contains 13,985 words according to the word-processing program used to prepare this paper (Microsoft Word). Petitioner certifies that this Petition for *Inter Partes* Review does not exceed the applicable type-volume limit of 37 C.F.R. § 42.24(a).

Dated: August 9, 2022

/John C. Alemanni/
Counsel for Petitioner

CERTIFICATE OF SERVICE

The undersigned hereby certifies that a copy of this Petition for *Inter Partes* Review of U.S. Patent No. 11,190,633, including its supporting Exhibits (1001-1017) has been served via USPS Priority Mail Express on August 9, 2022 upon Patent Owner's correspondence address of record for U.S. Patent No. 11,190,633:

JEFFREY D. MULLEN
2212 HASSINGER LANE
GLENSHAW, PA 15116

The Petition has also been served via email to lead trial counsel for litigation at the following address:

KELLY HART & HALLMAN LLP
J. Stephen Ravel (#16584975)
303 Colorado St Ste 2000
Austin, TX 78701-0022
Email: steve.ravel@kellyhart.com

For the additional litigation counsel of record, the Petition has been served via email to the following email addresses:

KILPATRICK TOWNSEND & STOCKTON LLP
Steven D. Moore (admitted in W.D. Tex.)
Rishi Gupta (admitted pro hac vice)
Two Embarcadero Center, Suite 1900
San Francisco, CA 94111
Telephone: (415) 576-0200
Facsimile: (415) 576-0300
Email: smoore@kilpatricktownsend.com
Email: rgupta@kilpatricktownsend.com

Alton L. Absher III (admitted in W.D. Tex.)
1001 West Fourth Street
Winston-Salem, NC 27101
Telephone: (336) 607-7300
Facsimile: (336) 607-7500
Email: aabsher@kilpatricktownsend.com

Mansi H. Shah (admitted pro hac vice)
1080 Marsh Road
Menlo Park, CA 94025
Telephone: (650) 326-2400
Facsimile: (650) 326-2422
Email: mhhah@kilpatricktownsend.com

Aarti Shah (admitted pro hac vice)
607 14th Street, NW
Suite 900
Washington, DC 20005-2018
Telephone: 202 508 5800
Facsimile: 202 508 5858
Email: ashah@kilpatricktownsend.com

Kathleen R. Geyer (admitted pro hac vice)
Patrick M. Njeim (admitted pro hac vice)
1420 Fifth Avenue
Suite 3700
Seattle, WA 98101
Telephone: 206 467 9600
Facsimile: 206 623 6793
Email: kgeyer@kilpatricktownsend.com
Email: pnjeim@kilpatricktownsend.com

Respectfully,

Dated: August 9, 2022

By: */John C. Alemanni/*
John C. Alemanni
Registration No. 47,384
Counsel for Petitioner