US006539336B1

(12) **United States Patent**
Vock et al.

(10) **Patent No.: US 6,539,336 B1**
(45) **Date of Patent: *Mar. 25, 2003**

(54) **SPORT MONITORING SYSTEM FOR DETERMINING AIRTIME, SPEED, POWER ABSORBED AND OTHER FACTORS SUCH AS DROP DISTANCE**

(75) Inventors: **Curtis A. Vock**, Charlestown, MA (US); **Dennis Darcy**, Dracut, MA (US); **Andrew Bodkin**, Needham, MA (US); **Perry Youngs**, Mattishal (GB); **Adrian F. Larkin**, Chelmsford (GB); **Steven Finberg**, Cambridge, MA (US); **Charles Marshall**, N. Andover, MA (US); **Shawn Burke**, Andover, MA (US); **Peter Flentov**, Carlisle, MA (US); **Kevin J. Grealish**, Westwood, MA (US)

(73) Assignee: **PhatRat Technologies, Inc.**, Boulder, CO (US)

(*) Notice: This patent issued on a continued prosecution application filed under 37 CFR 1.53(d), and is subject to the twenty year patent term provisions of 35 U.S.C. 154(a)(2).

Subject to any disclaimer, the term of this patent is extended or adjusted under 35 U.S.C. 154(b) by 0 days.

(21) Appl. No.: **09/089,232**

(22) Filed: **Jun. 2, 1998**

Related U.S. Application Data

(63) Continuation-in-part of application No. 08/867,083, filed on Jun. 2, 1997, now Pat. No. 6,266,623, and a continuation-in-part of application No. 08/764,758, filed on Dec. 12, 1996, now Pat. No. 5,960,380.

(60) Provisional application No. 60/077,251, filed on Mar. 9, 1998.

(51) **Int. Cl.**[7] **G01L 3/24**

(52) **U.S. Cl.** **702/182**; 702/44; 702/178; 73/379.01

(58) **Field of Search** ..... 702/182, 41, 42, 702/44, 79, 80, 96, 104, 138, 139, 158, 141, 142, 147, 149, 160, 176–178, 183, 187, 189, 198, FOR 126, 56, 60–62, 166, 179; 364/528.36, 39, 41, 410.1, 411.1; 377/20, 23, 24.1, 24.2, 5, 9; 482/71, 74, 902, 8; 235/105; 324/160, 161, 162, 142; 280/DIG. 13; 368/10, 11, 14; 73/597, 488–493, 495, 502, 503, 862.01, 862.02, 379.01, 379.03, 720, 721, 726, 727, 865.2, DIG. 4, 862.042–862.045; 340/323 R, 665, 668–670; 434/253; 968/885

(56) **References Cited**

U.S. PATENT DOCUMENTS

3,918,058 A 11/1975 Noyori et al. 343/7

(List continued on next page.)

Primary Examiner—Hal Wachsman
(74) *Attorney, Agent, or Firm*—Curtis A. Vock; Lathrop & Gage L.C.

(57) **ABSTRACT**

The invention detects the loft time, speed, power and/or drop distance of a vehicle, such as a sporting vehicle, during activities of moving and jumping. A loft sensor detects when the vehicle leaves the ground and when the vehicle returns to the ground. A controller subsystem converts the sensed information to determine a loft time. A display shows the recorded loft time to a user of the system. In addition, a speed sensor can detect the vehicle's speed for selective display to the user. A power sensing section informs the user of expended energy, which can be compared to other users. A drop distance sensing unit informs the user of the peak height of a jump, during an airtime. Gaming on the internet is facilitated to connect worldwide sport enthusiasts.

24 Claims, 49 Drawing Sheets

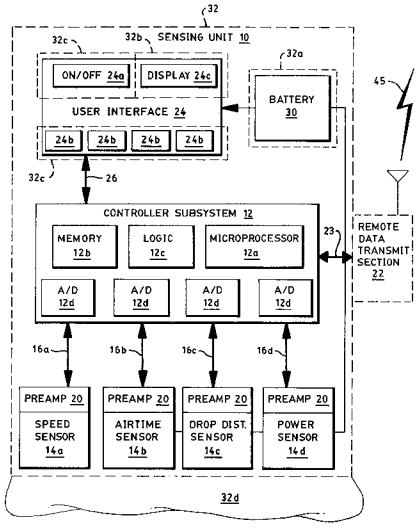

U.S. PATENT DOCUMENTS

3,978,725	A		9/1976	Hadtke	73/182
4,089,057	A		5/1978	Eriksson	364/562
4,371,945	A		2/1983	Karr et al.	364/561
4,516,110	A	*	5/1985	Overmyer	340/323 R
4,722,222	A		2/1988	Purdy et al.	73/597
4,757,453	A	*	7/1988	Nasiff	73/379.01
4,757,714	A		7/1988	Purdy et al.	73/597
5,033,013	A	*	7/1991	Kato et al.	702/160
5,162,828	A		11/1992	Furness et al.	353/122
5,295,085	A		3/1994	Hoffacker	364/558
5,343,445	A		8/1994	Cherdak	368/10
5,446,775	A		8/1995	Wright et al.	377/24.2
5,452,269	A		9/1995	Cherdak	368/10
5,471,405	A		11/1995	Marsh	364/556
5,475,725	A		12/1995	Nakamura	377/24.2
5,487,006	A		1/1996	Kakizaki et al.	364/424.05
5,574,669	A		11/1996	Marshall	364/569
5,671,162	A	*	9/1997	Werbin	702/139
5,690,591	A	*	11/1997	Kenmochi et al.	434/253
5,724,265	A	*	3/1998	Hutchings	702/160

* cited by examiner

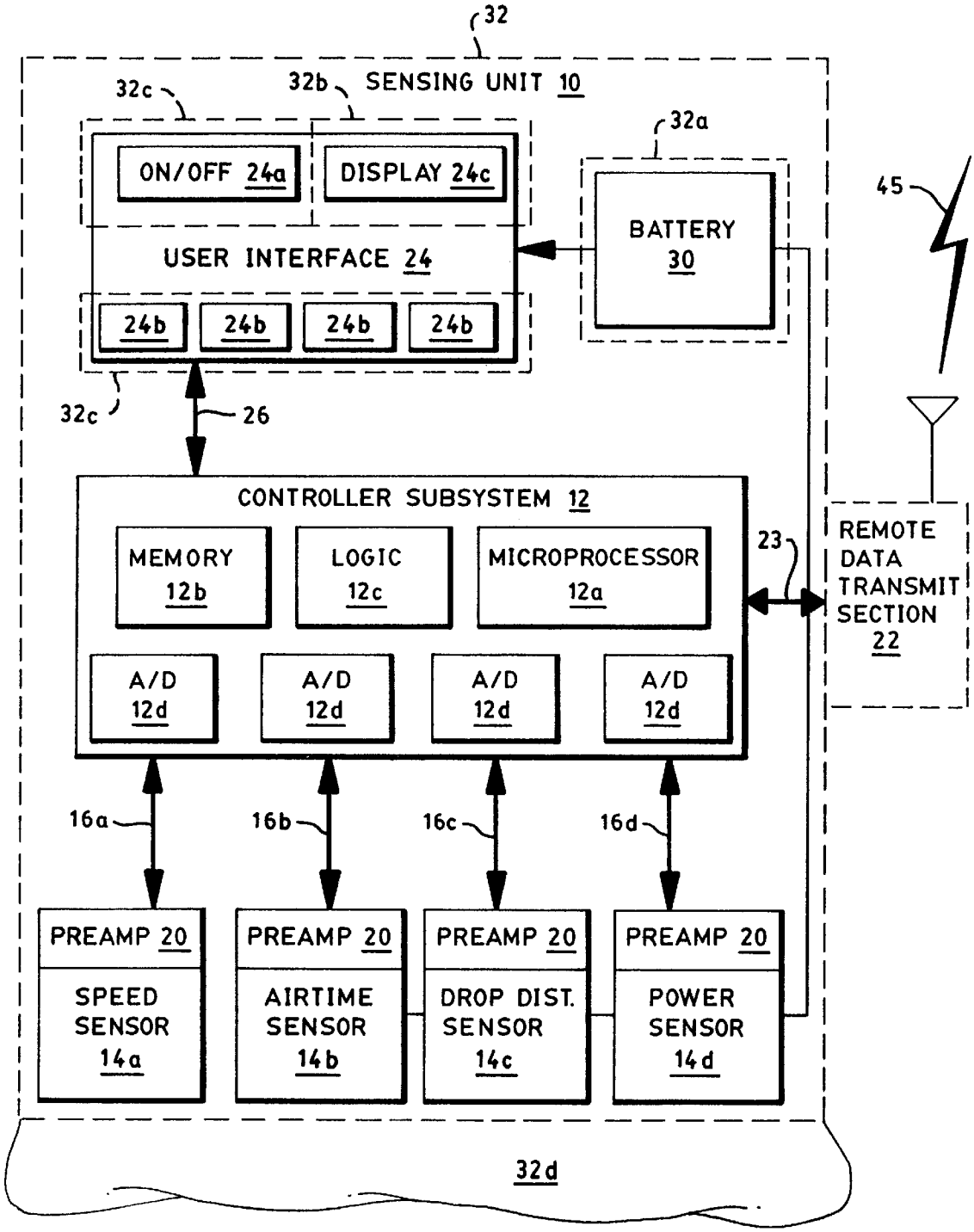
32
SENSING UNIT 10
32c
32b
32a
ON/OFF 24a
DISPLAY 24c
USER INTERFACE 24
24b
24b
24b
24b
BATTERY 30
45
32c
26
CONTROLLER SUBSYSTEM 12
MEMORY 12b
LOGIC 12c
MICROPROCESSOR 12a
23
REMOTE DATA TRANSMIT SECTION 22
A/D 12d
A/D 12d
A/D 12d
A/D 12d
16a
16b
16c
16d
PREAMP 20
PREAMP 20
PREAMP 20
PREAMP 20
SPEED SENSOR 14a
AIRTIME SENSOR 14b
DROP DIST. SENSOR 14c
POWER SENSOR 14d
32d

FIG. 1A

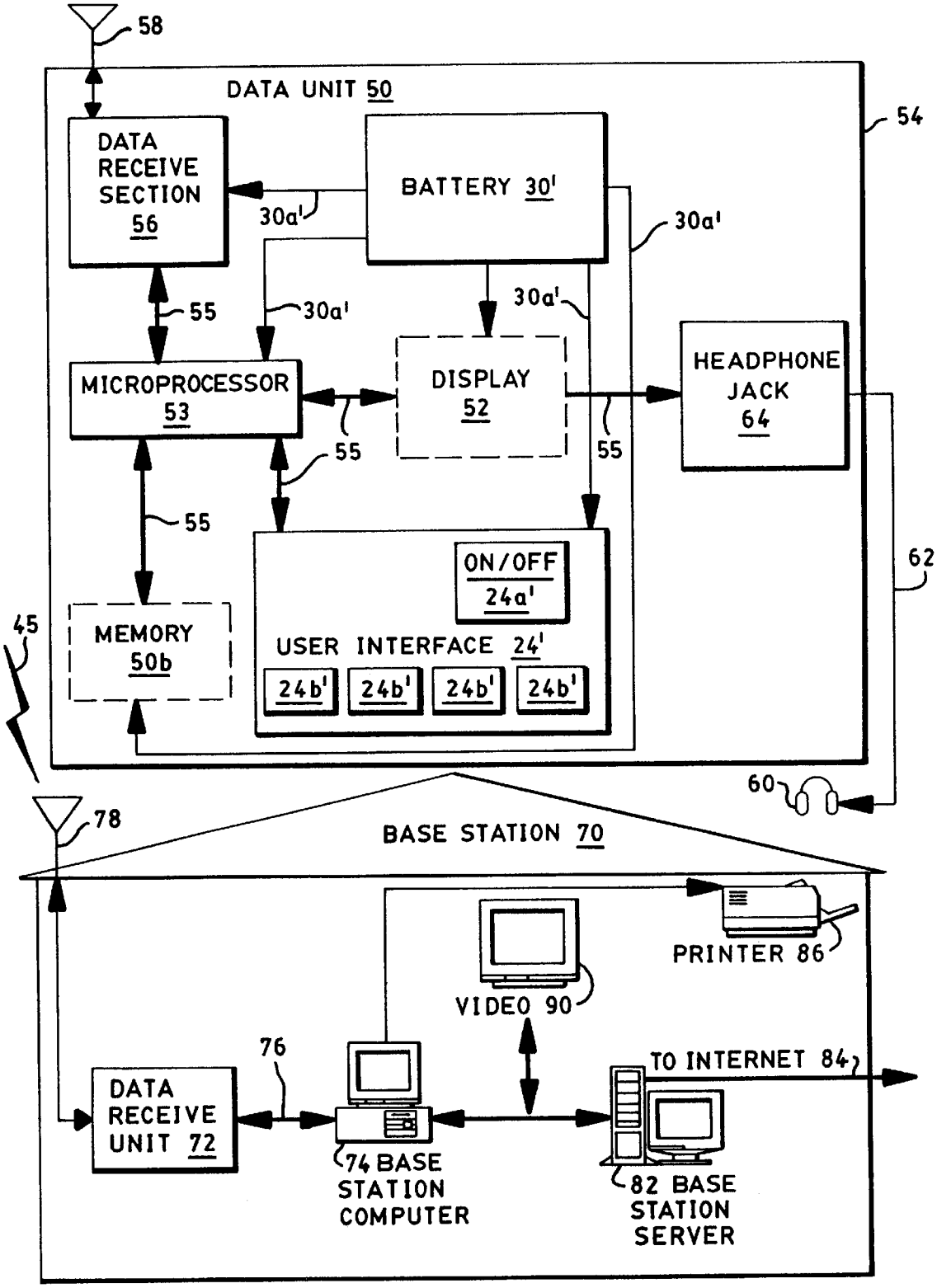
58
DATA UNIT 50
54
DATA RECEIVE SECTION 56
BATTERY 30'
30a'
30a'
55
30a'
30a'
MICROPROCESSOR 53
DISPLAY 52
HEADPHONE JACK 64
55
55
55
62
ON/OFF 24a'
45
MEMORY 50b
USER INTERFACE 24'
24b'
24b'
24b'
24b'
60
78
BASE STATION 70
PRINTER 86
VIDEO 90
76
TO INTERNET 84
DATA RECEIVE UNIT 72
74 BASE STATION COMPUTER
82 BASE STATION SERVER

FIG. 1B

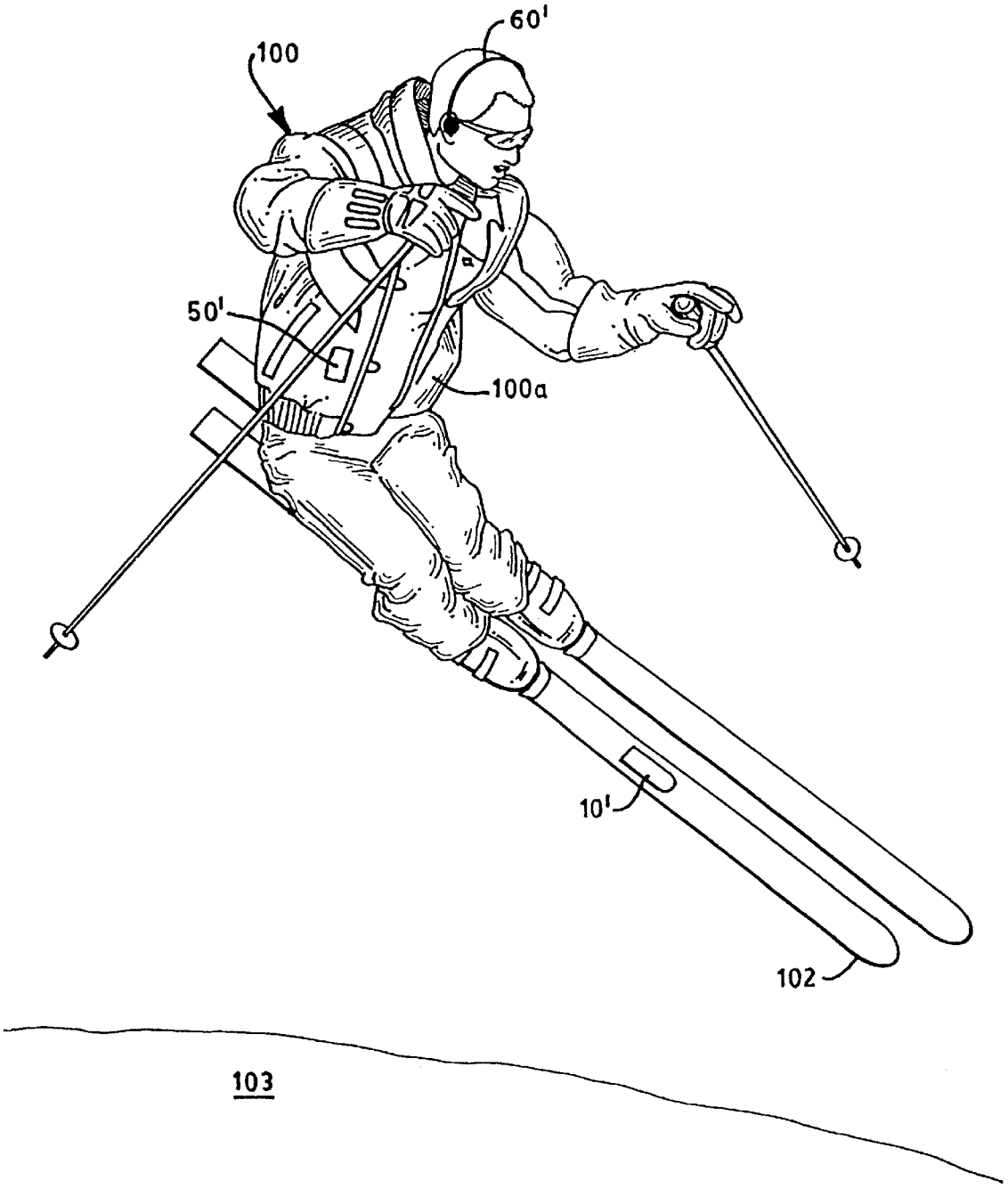

FIG. 2

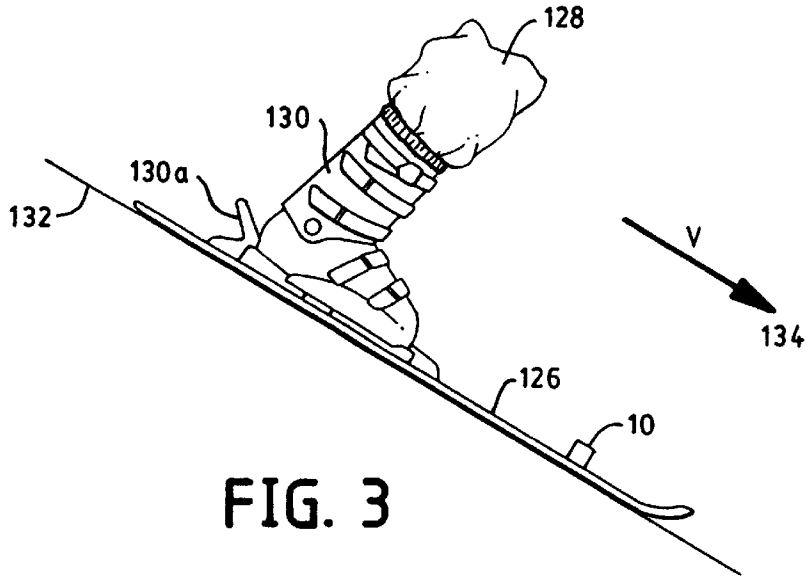
128
130
130a
132
V
134
126
10

FIG. 3

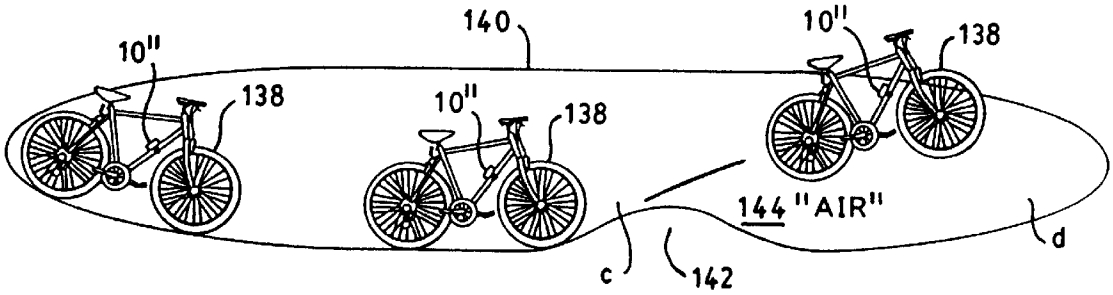
140
10"
138
10"
138
10"
138
144 "AIR"
c
142
d

FIG. 5

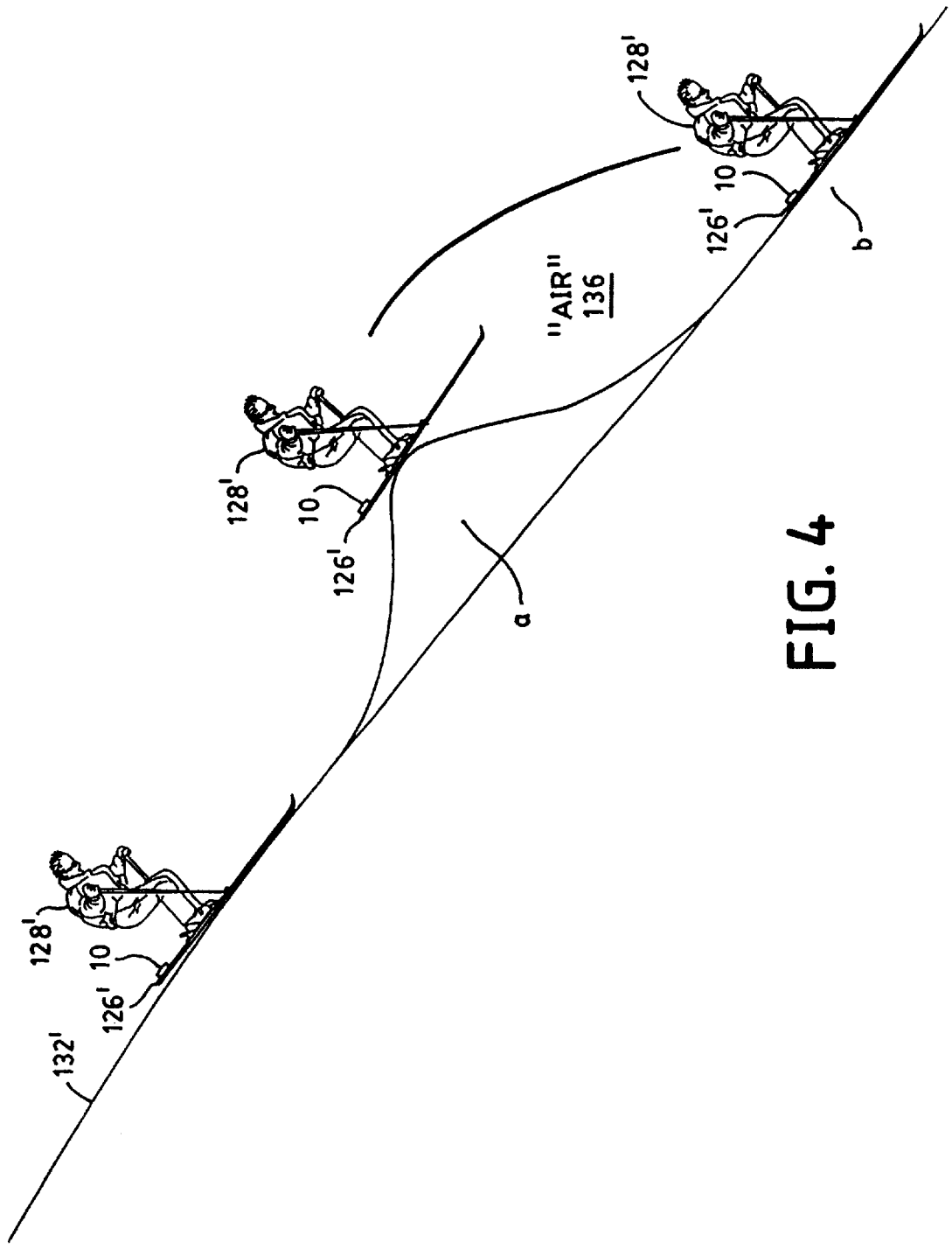

FIG. 4

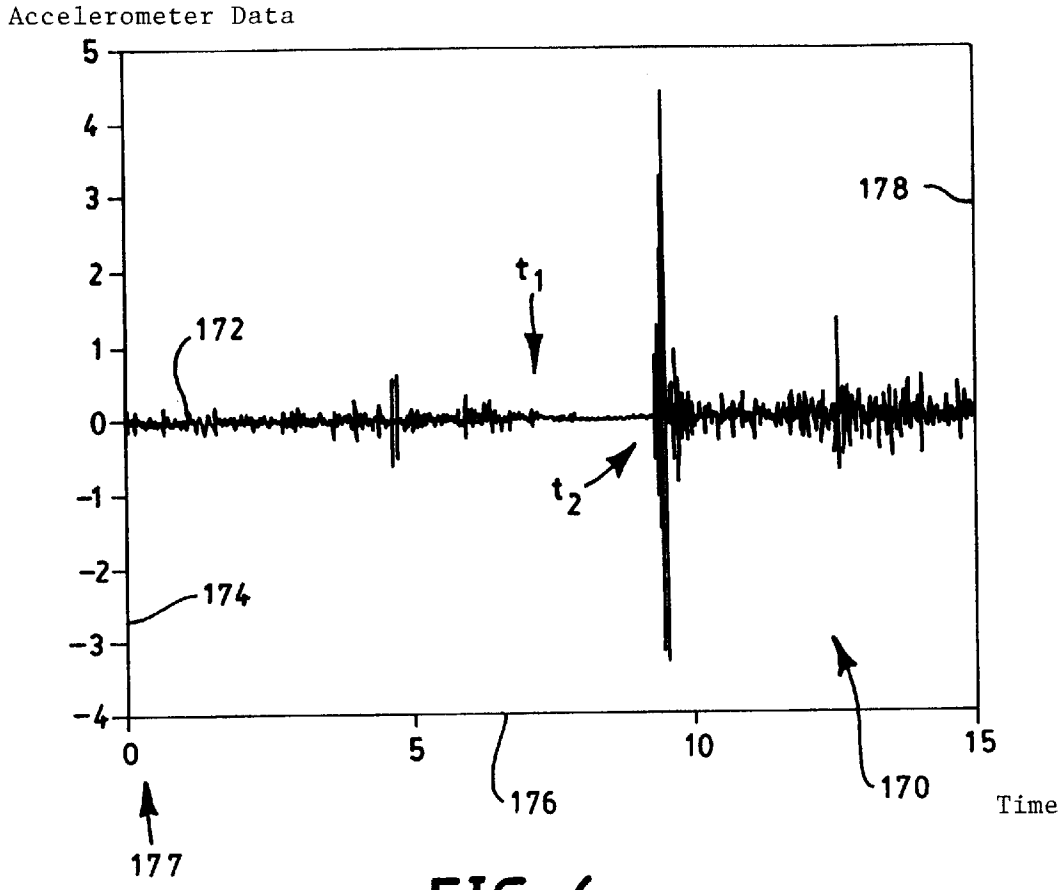
Accelerometer Data
5
4
3
2
1
0
-1
-2
-3
-4
0
5
10
15
Time
178
172
174
176
170
177
t_1
t_2

FIG. 6

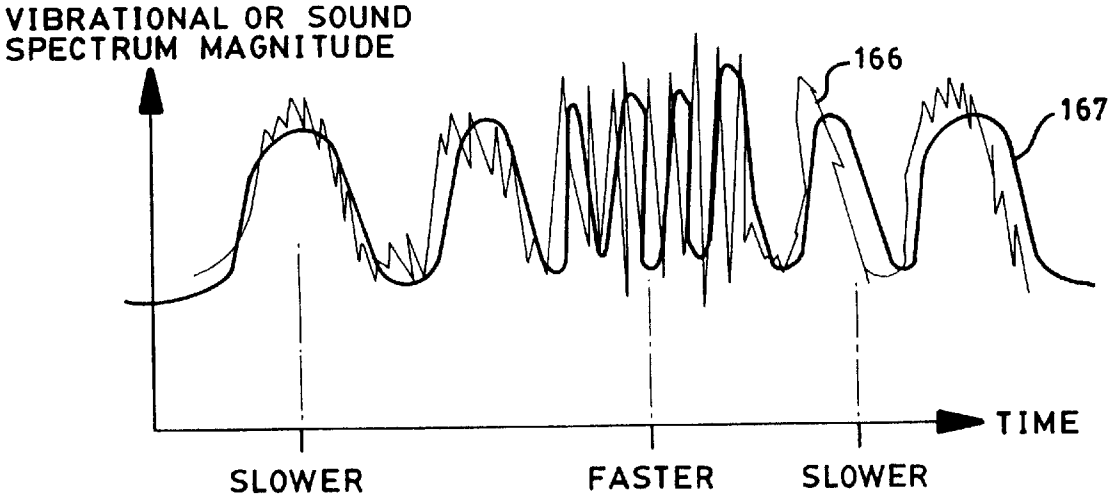
VIBRATIONAL OR SOUND
SPECTRUM MAGNITUDE
166
167
TIME
SLOWER
FASTER
SLOWER

FIG. 8

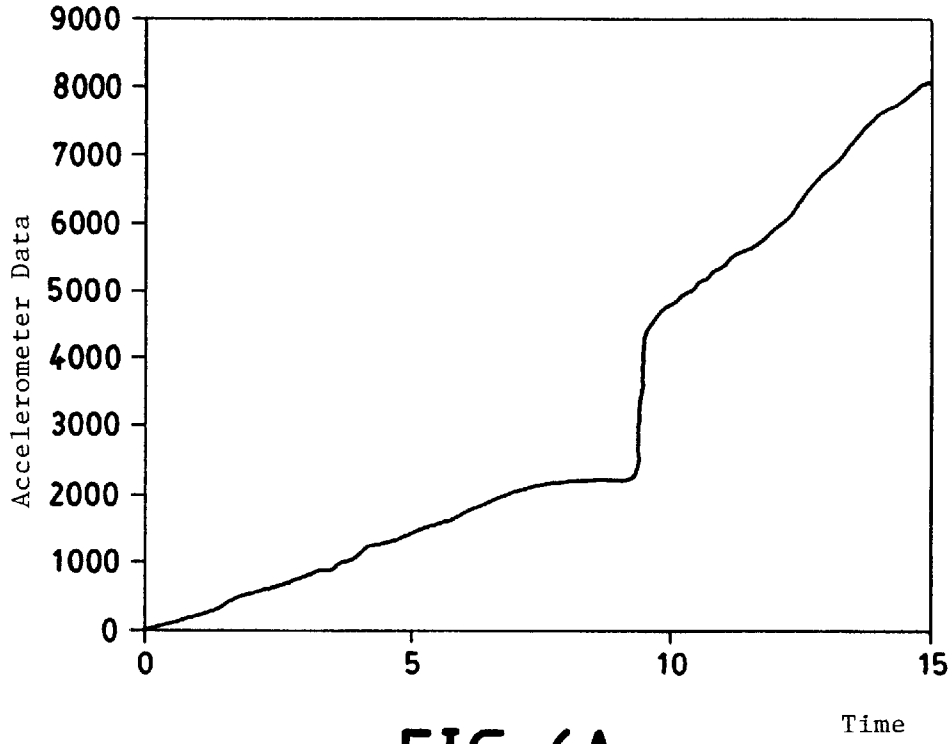
9000
8000
7000
6000
5000
4000
3000
2000
1000
0
Accelerometer Data
0
5
10
15
Time

FIG. 6A

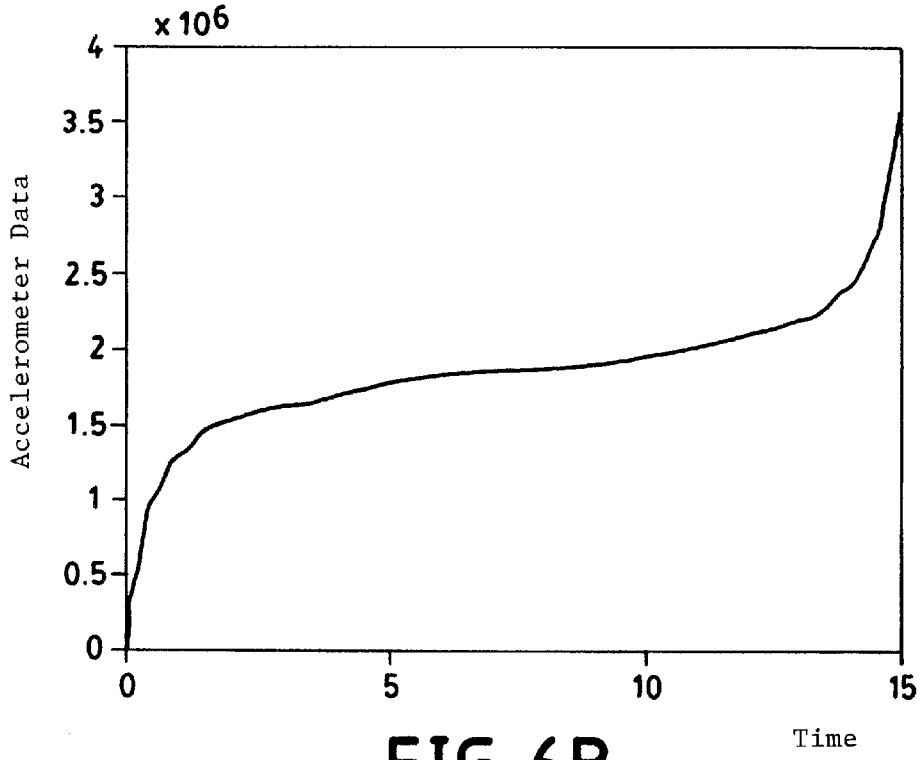
x 10^6
4
3.5
3
2.5
2
1.5
1
0.5
0
Accelerometer Data
0
5
10
15
Time

FIG. 6B

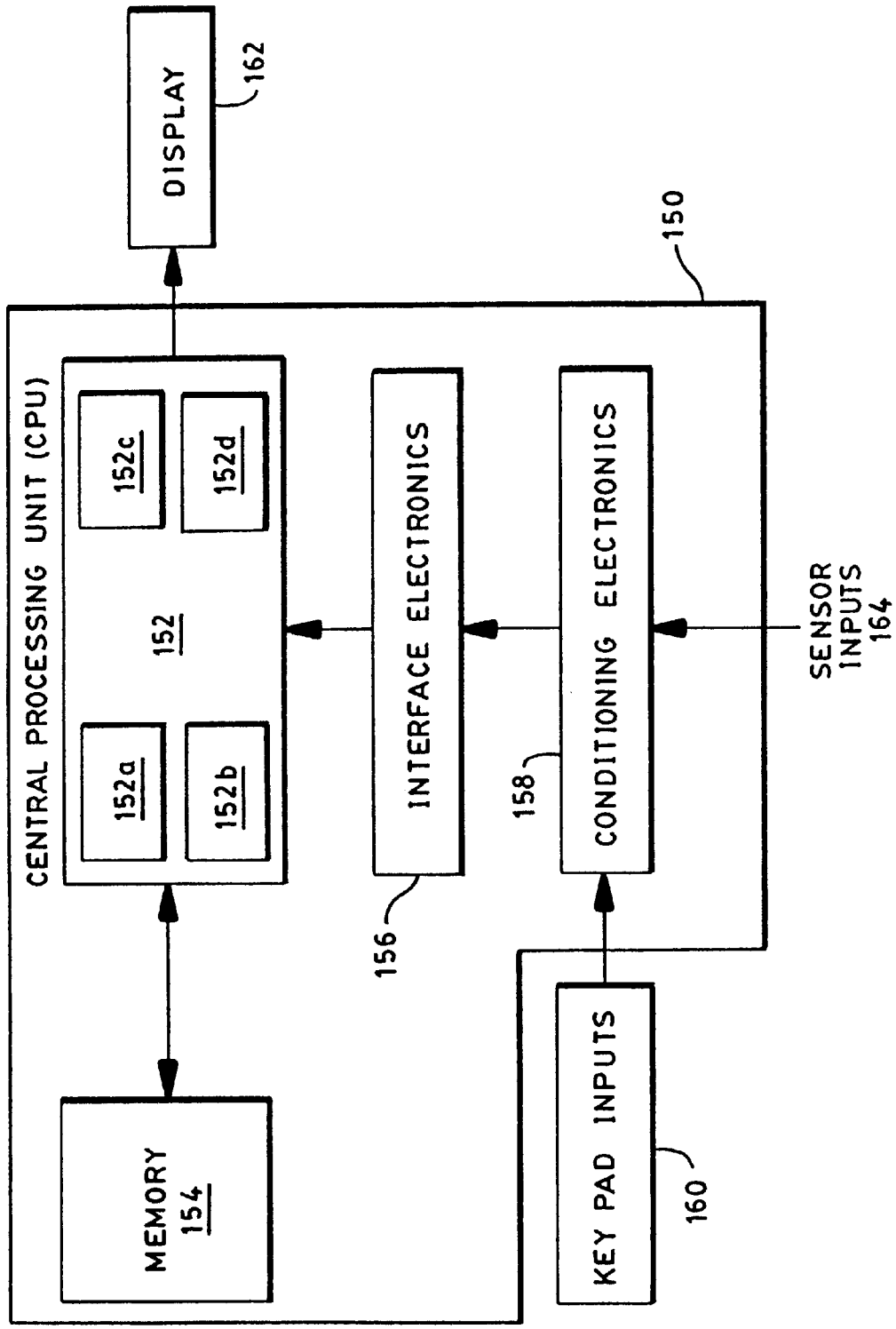
DISPLAY
162
150
CENTRAL PROCESSING UNIT (CPU)
152c
152d
152
152a
152b
INTERFACE ELECTRONICS
156
158
CONDITIONING ELECTRONICS
SENSOR INPUTS 164
MEMORY 154
KEY PAD INPUTS
160

FIG. 7

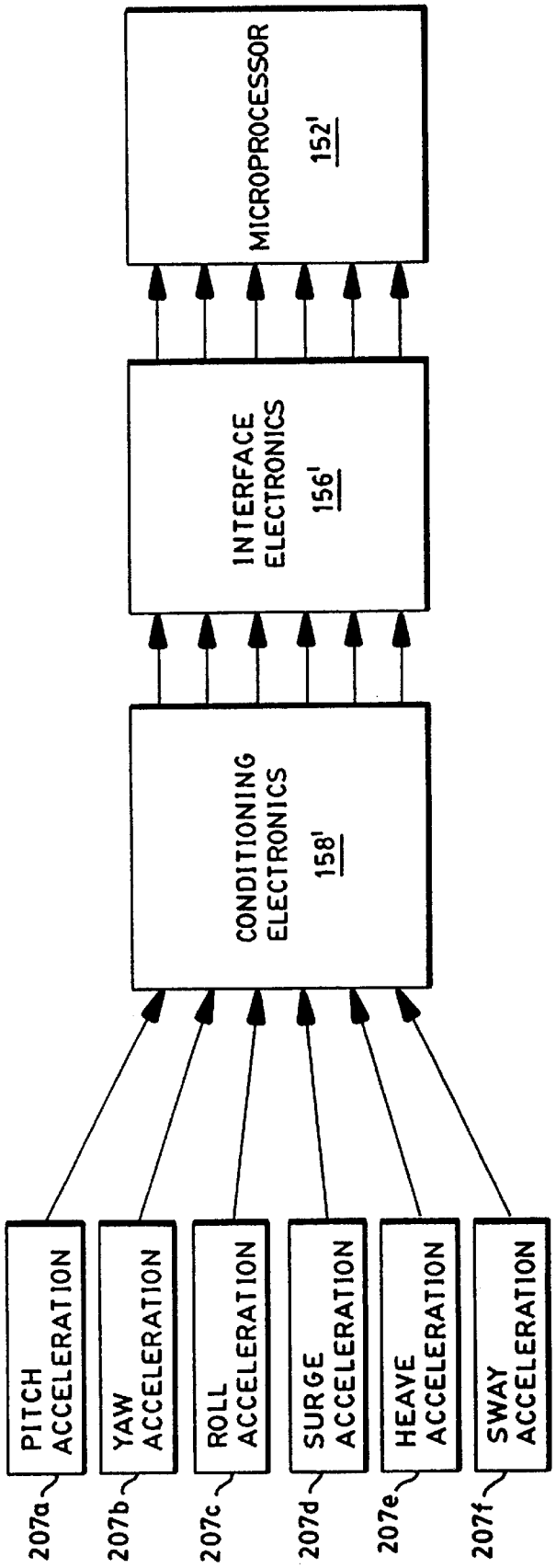
MICROPROCESSOR
152'
INTERFACE ELECTRONICS
156'
CONDITIONING ELECTRONICS
158'
PITCH ACCELERATION
YAW ACCELERATION
ROLL ACCELERATION
SURGE ACCELERATION
HEAVE ACCELERATION
SWAY ACCELERATION
207a
207b
207c
207d
207e
207f

FIG.9

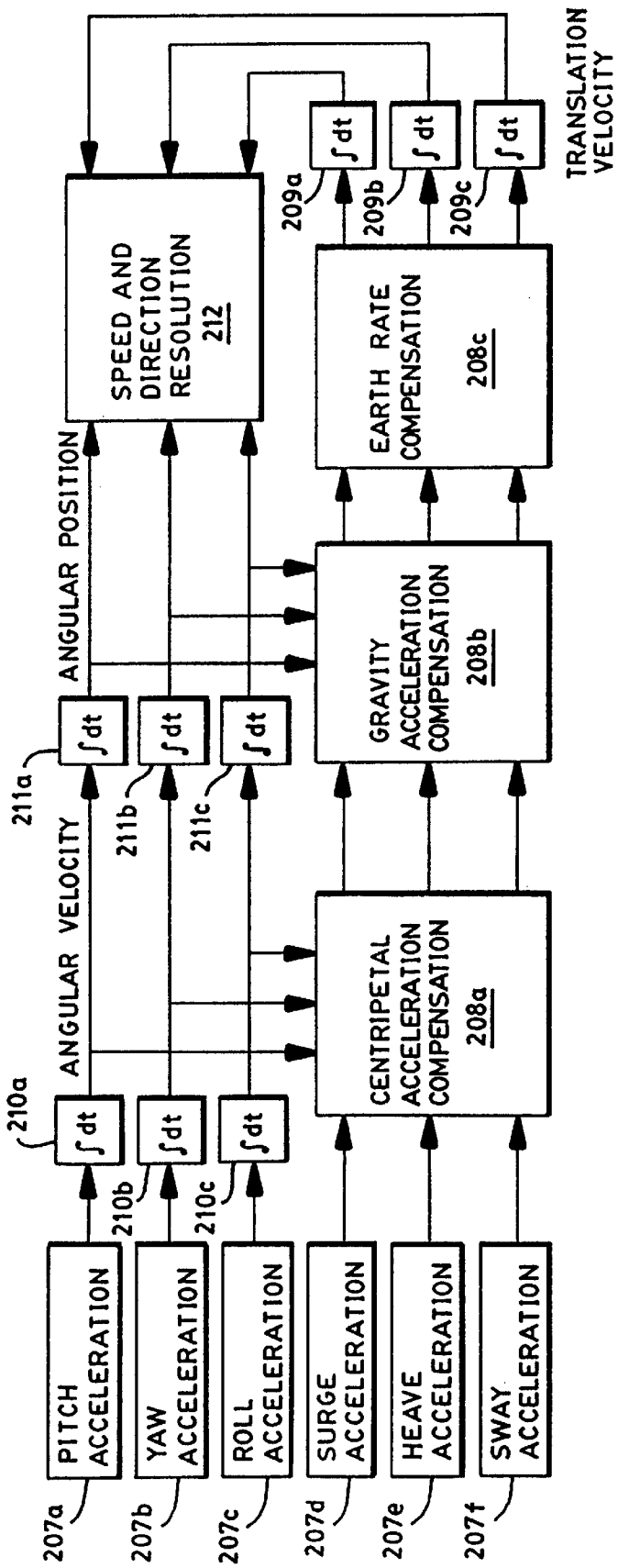
PITCH ACCELERATION
YAW ACCELERATION
ROLL ACCELERATION
SURGE ACCELERATION
HEAVE ACCELERATION
SWAY ACCELERATION
207a
207b
207c
207d
207e
207f
∫dt
210a
210b
210c
ANGULAR VELOCITY
211a
211b
211c
ANGULAR POSITION
CENTRIPETAL ACCELERATION COMPENSATION 208a
GRAVITY ACCELERATION COMPENSATION 208b
EARTH RATE COMPENSATION 208c
SPEED AND DIRECTION RESOLUTION 212
209a
209b
209c
TRANSLATION VELOCITY

FIG. 10

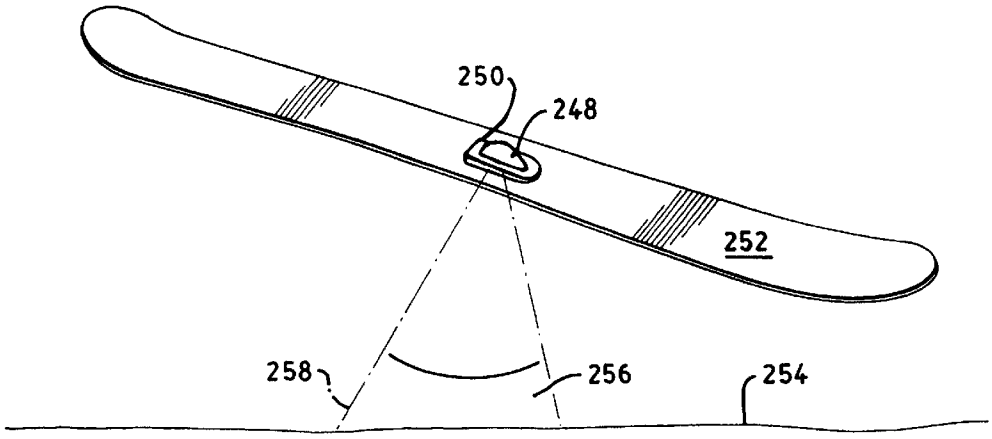

FIG. 11

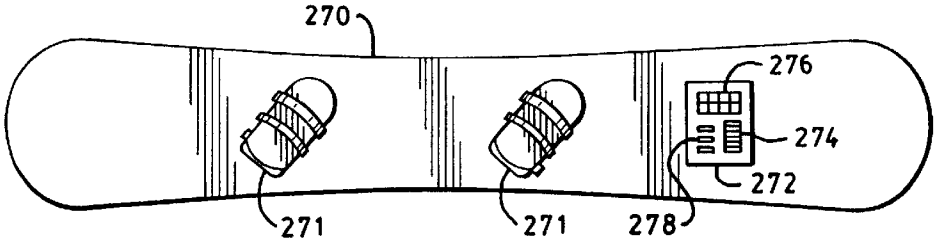

FIG. 12

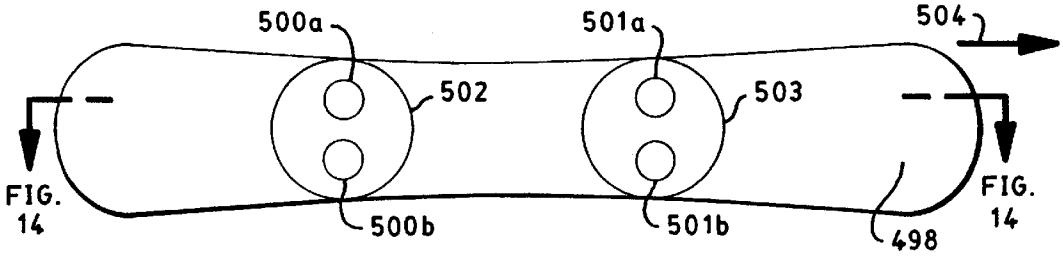

FIG. 13

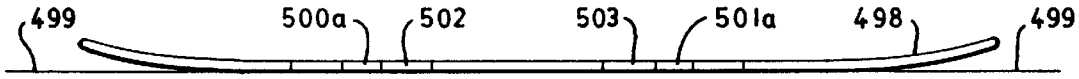

FIG. 14

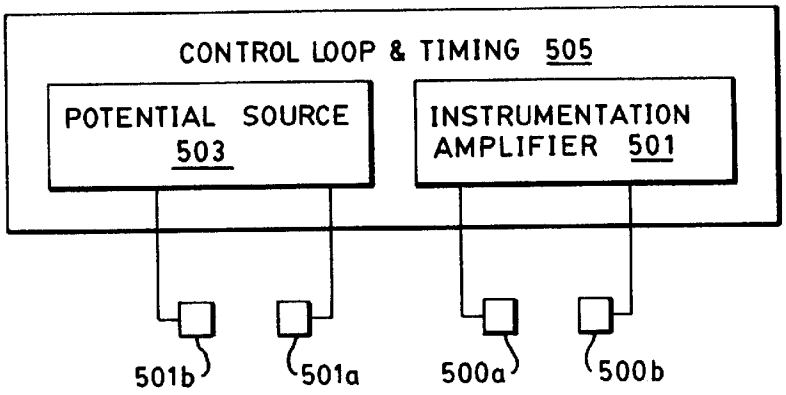

FIG. 15

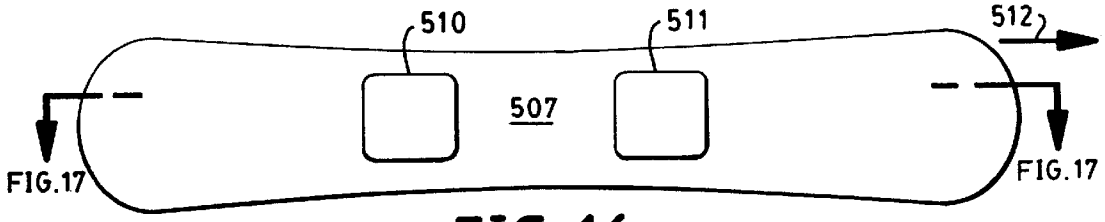

FIG. 16

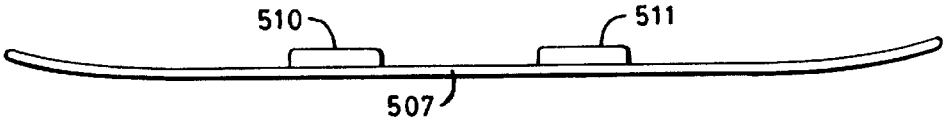

FIG. 17

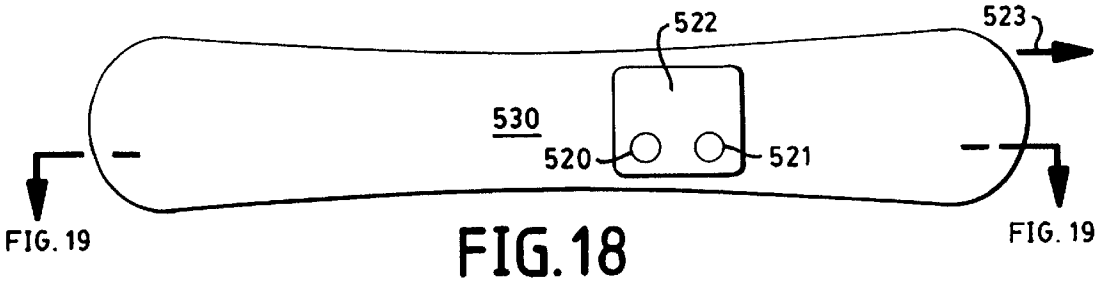

FIG. 18

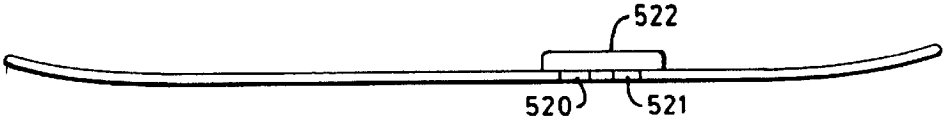

FIG. 19

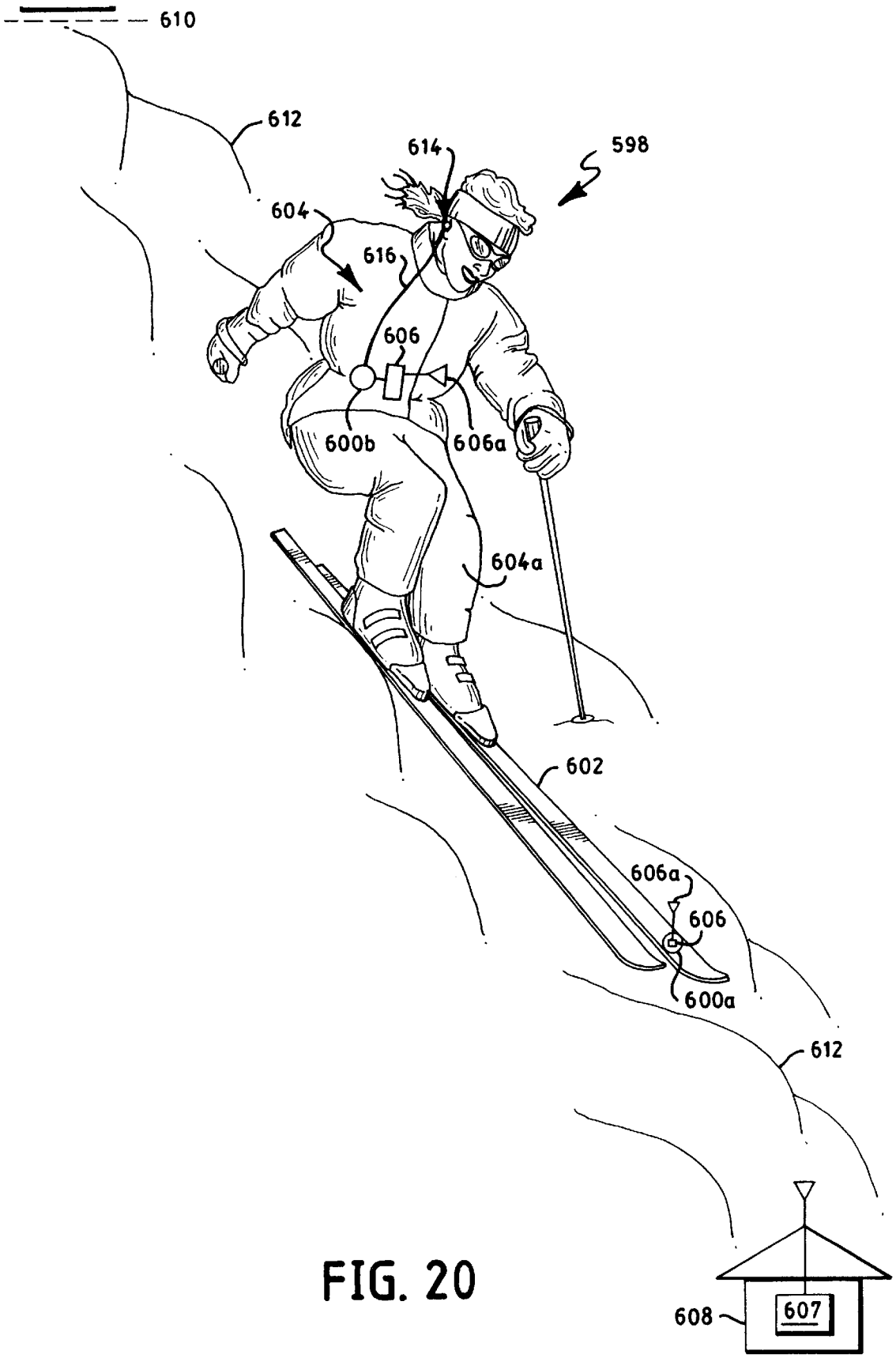
610
612
614
598
604
616
606
600b
606a
604a
602
606a
606
600a
612
608
607

FIG. 20

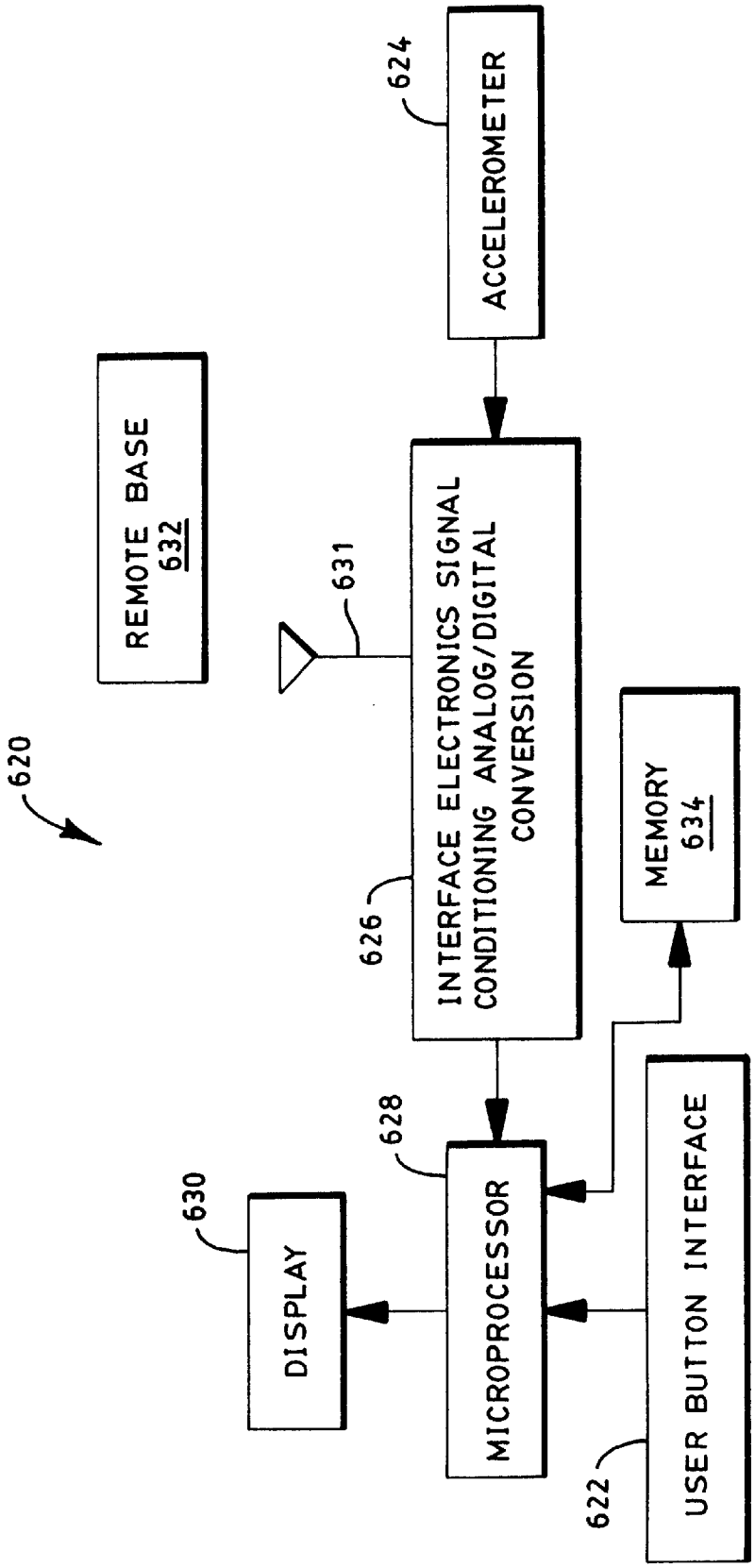
620
REMOTE BASE
632
631
624
ACCELEROMETER
INTERFACE ELECTRONICS SIGNAL
CONDITIONING ANALOG/DIGITAL
CONVERSION
626
MEMORY
634
630
DISPLAY
628
MICROPROCESSOR
USER BUTTON INTERFACE
622

FIG. 21

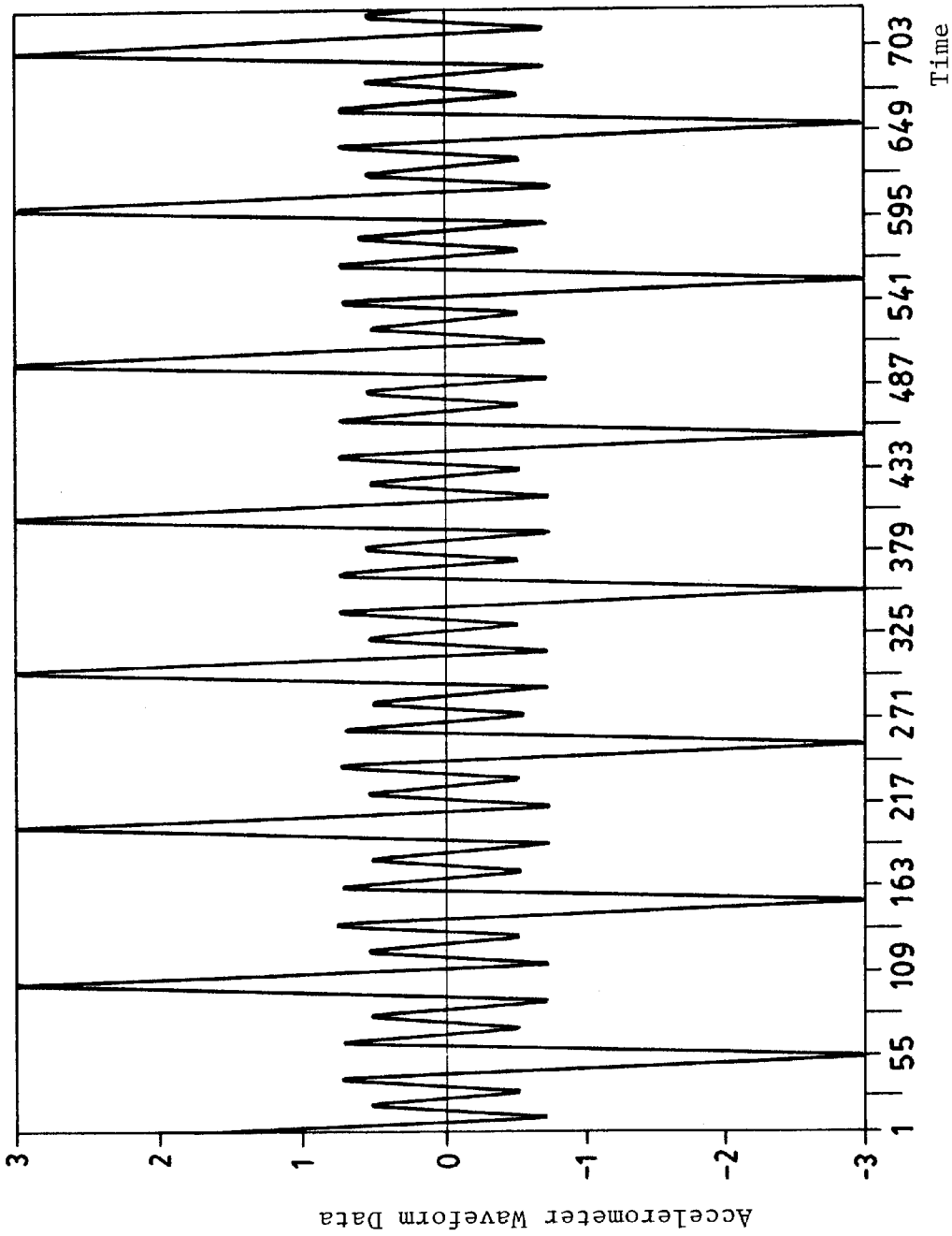
Accelerometer Waveform Data
3
2
1
0
-1
-2
-3
1
55
109
163
217
271
325
379
433
487
541
595
649
703
Time

FIG. 22

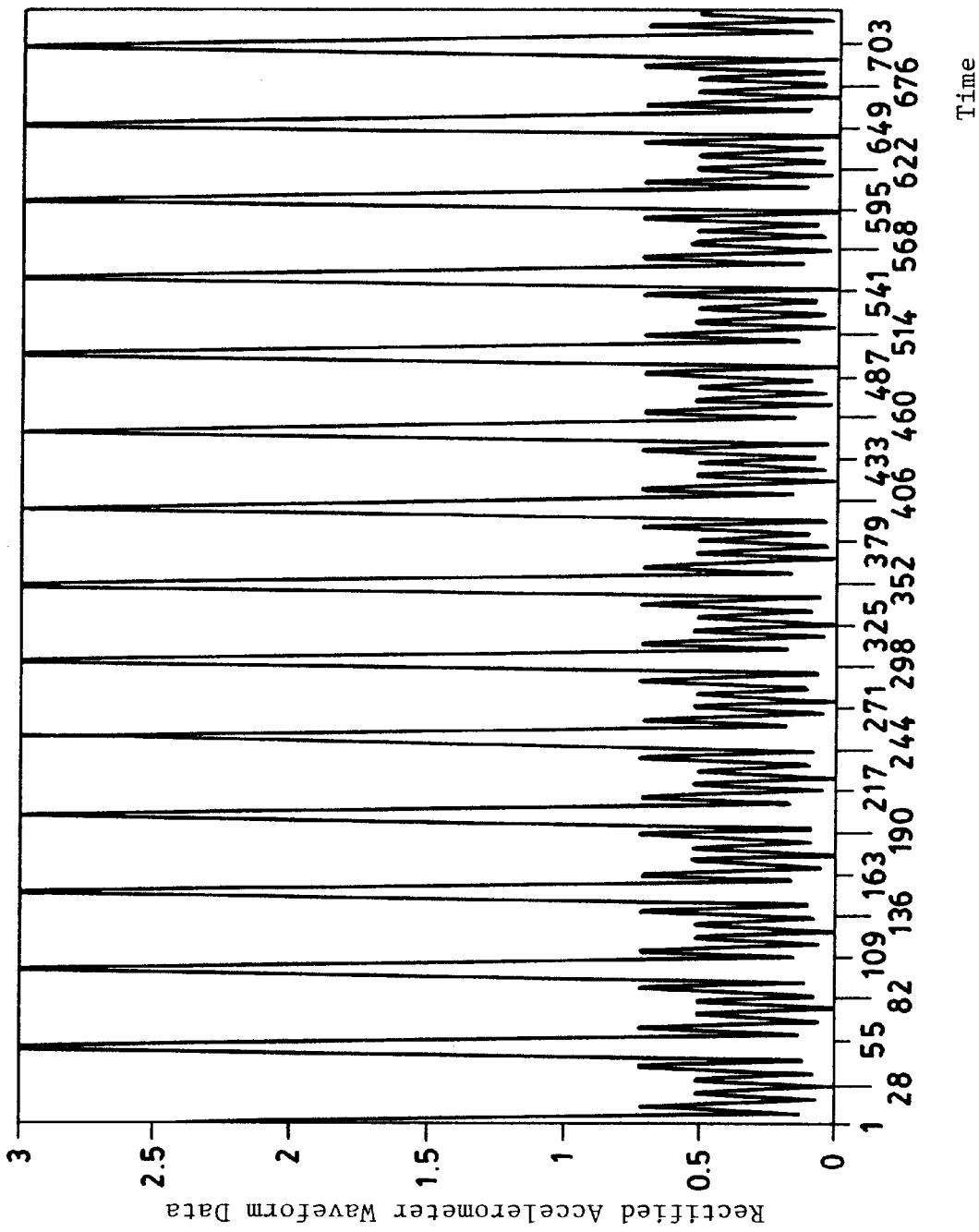
Rectified Accelerometer Waveform Data
3
2.5
2
1.5
1
0.5
0
1
28
55
82
109
136
163
190
217
244
271
298
325
352
379
406
433
460
487
514
541
568
595
622
649
676
703
Time

FIG. 23

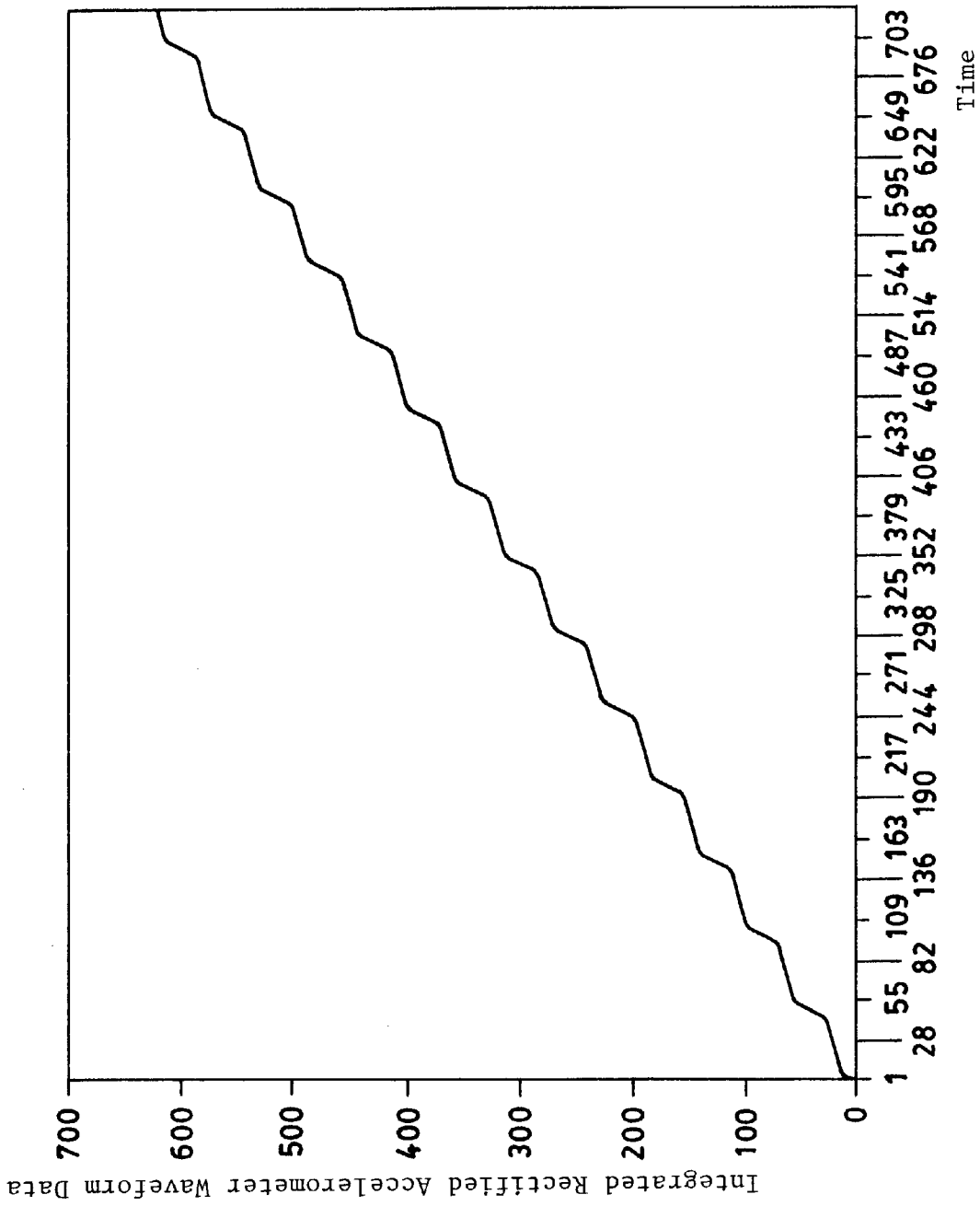
Integrated Rectified Accelerometer Waveform Data
700
600
500
400
300
200
100
0
1
28
55
82
109
136
163
190
217
244
271
298
325
352
379
406
433
460
487
514
541
568
595
622
649
676
703
Time

FIG. 24

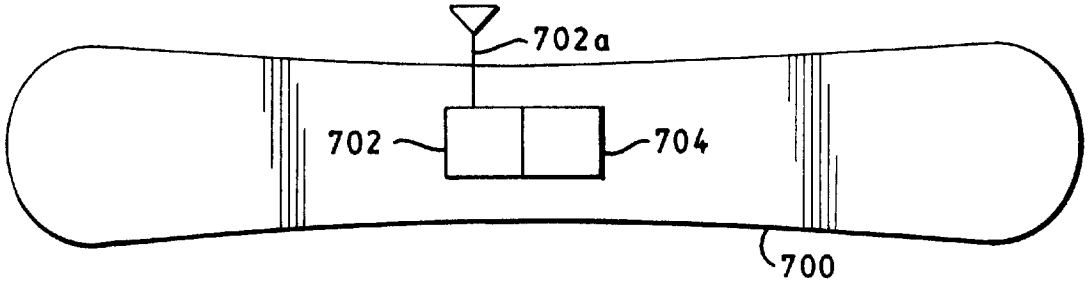

FIG. 25

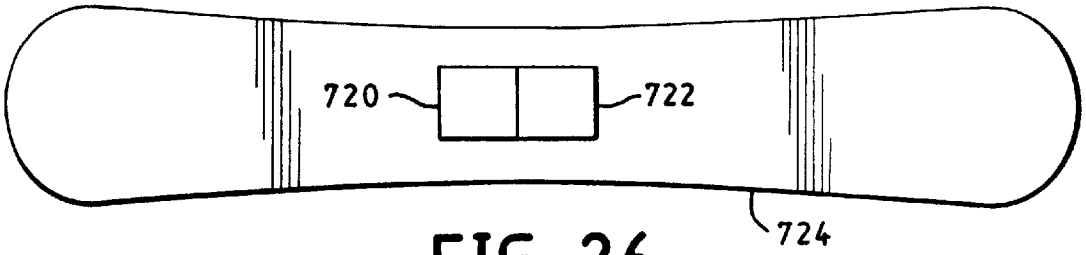

FIG. 26

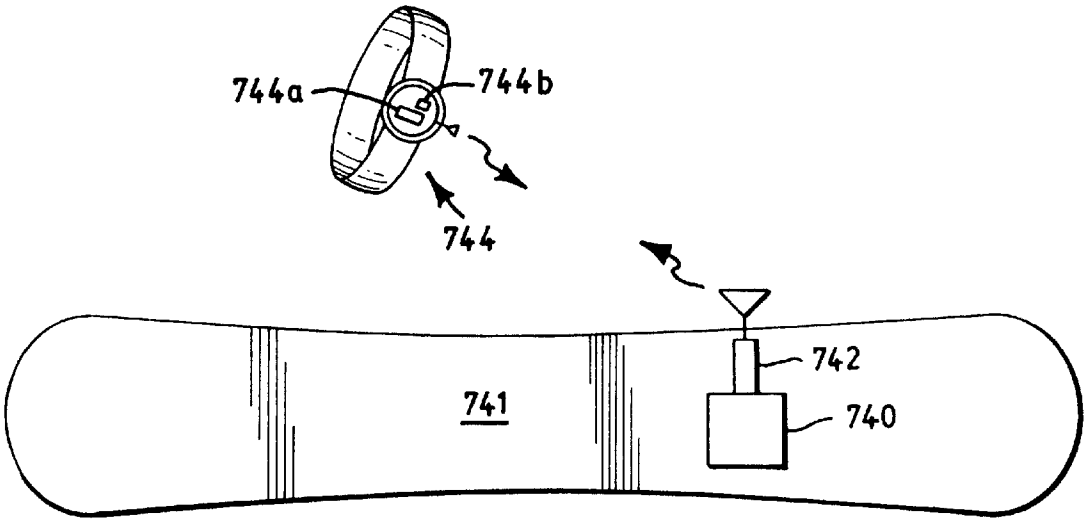

FIG. 27

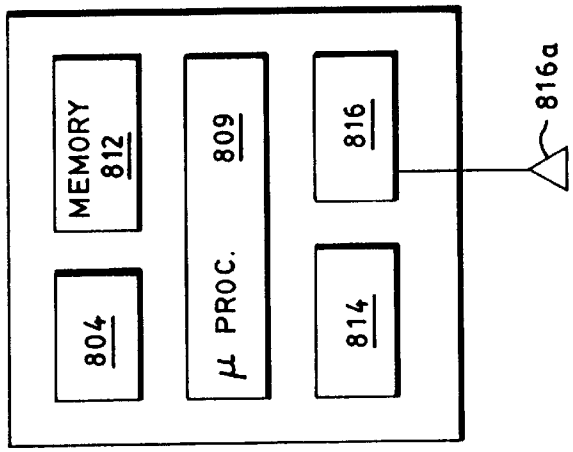
804
MEMORY
812
μ PROC.
809
814
816
816a

FIG. 29

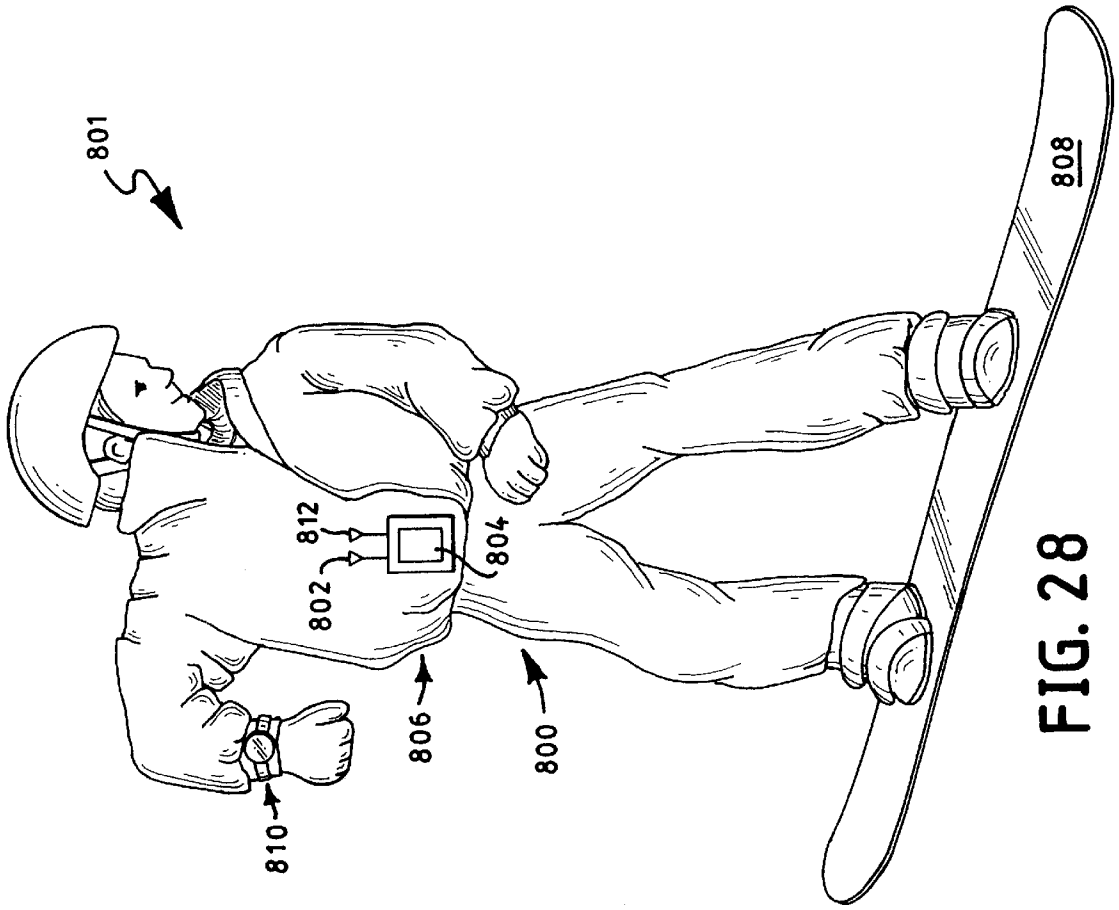
801
812
802
804
806
800
810
808

FIG. 28

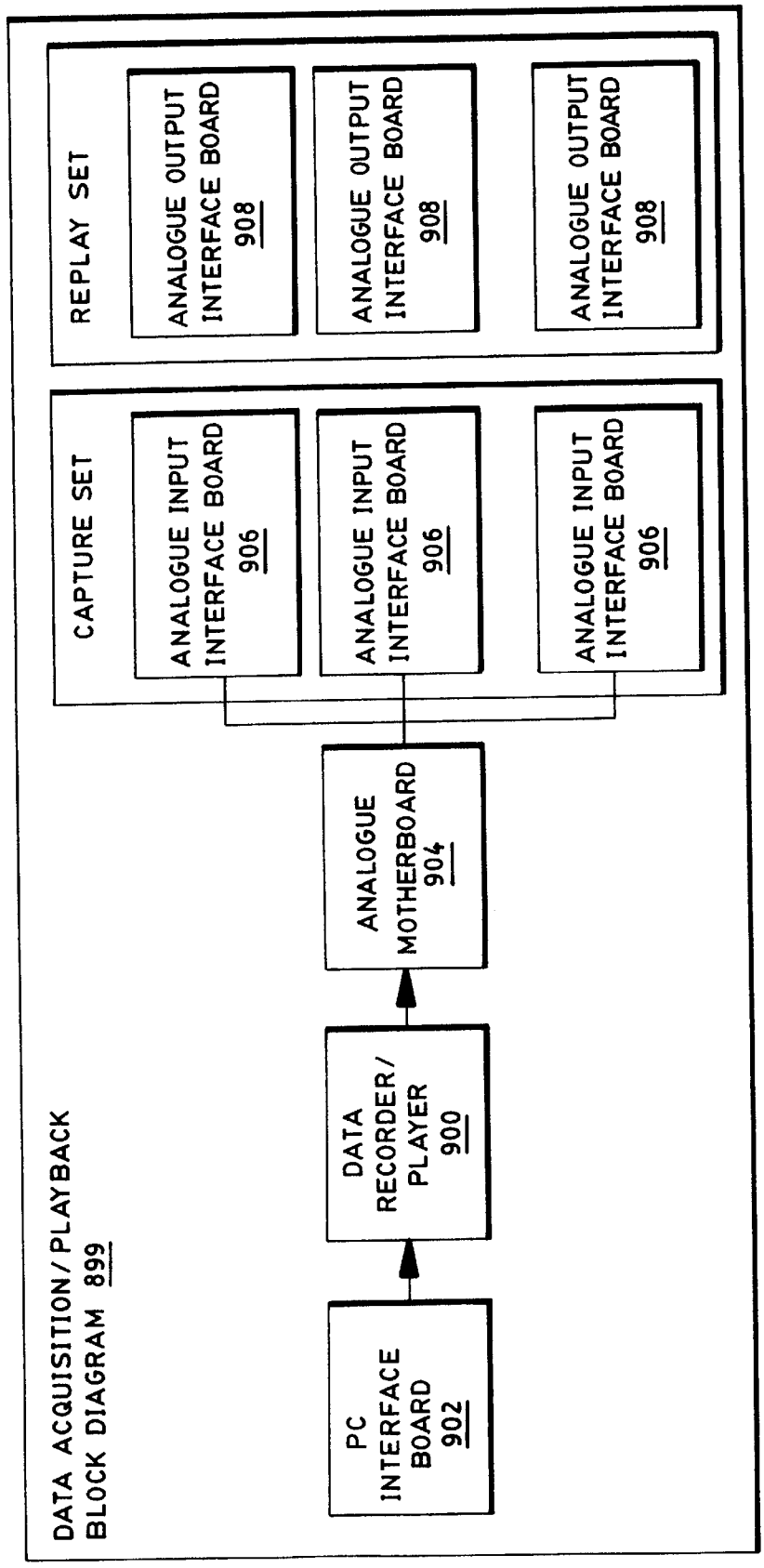
DATA ACQUISITION/PLAYBACK
BLOCK DIAGRAM 899
PC INTERFACE BOARD 902
DATA RECORDER/ PLAYER 900
ANALOGUE MOTHERBOARD 904
CAPTURE SET
ANALOGUE INPUT INTERFACE BOARD 906
ANALOGUE INPUT INTERFACE BOARD 906
ANALOGUE INPUT INTERFACE BOARD 906
REPLAY SET
ANALOGUE OUTPUT INTERFACE BOARD 908
ANALOGUE OUTPUT INTERFACE BOARD 908
ANALOGUE OUTPUT INTERFACE BOARD 908

FIG. 30

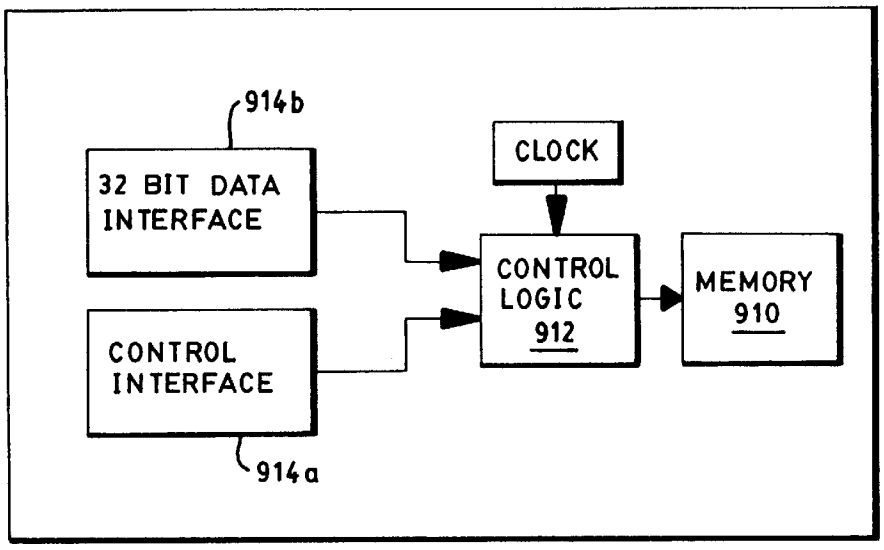
914b
32 BIT DATA INTERFACE
CLOCK
CONTROL LOGIC 912
MEMORY 910
CONTROL INTERFACE
914a

FIG. 31

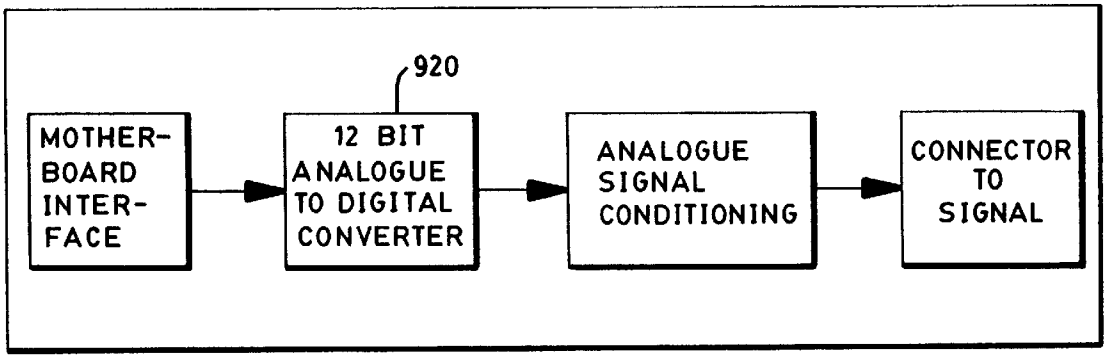
920
MOTHER-BOARD INTER-FACE
12 BIT ANALOGUE TO DIGITAL CONVERTER
ANALOGUE SIGNAL CONDITIONING
CONNECTOR TO SIGNAL

FIG. 33

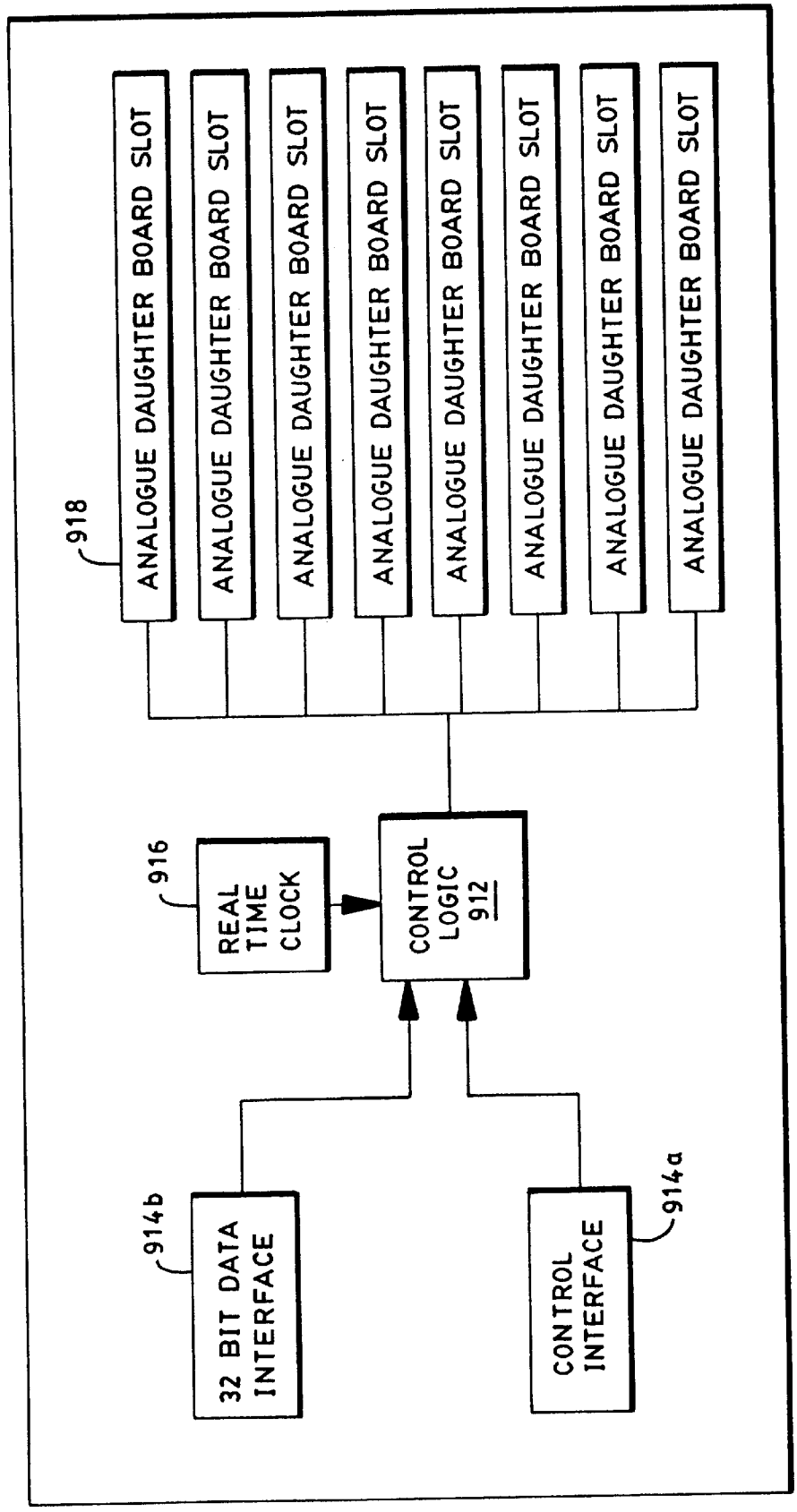
918
ANALOGUE DAUGHTER BOARD SLOT
ANALOGUE DAUGHTER BOARD SLOT
ANALOGUE DAUGHTER BOARD SLOT
ANALOGUE DAUGHTER BOARD SLOT
ANALOGUE DAUGHTER BOARD SLOT
ANALOGUE DAUGHTER BOARD SLOT
ANALOGUE DAUGHTER BOARD SLOT
ANALOGUE DAUGHTER BOARD SLOT
916
REAL TIME CLOCK
CONTROL LOGIC 912
914b
32 BIT DATA INTERFACE
CONTROL INTERFACE
914a

FIG. 32

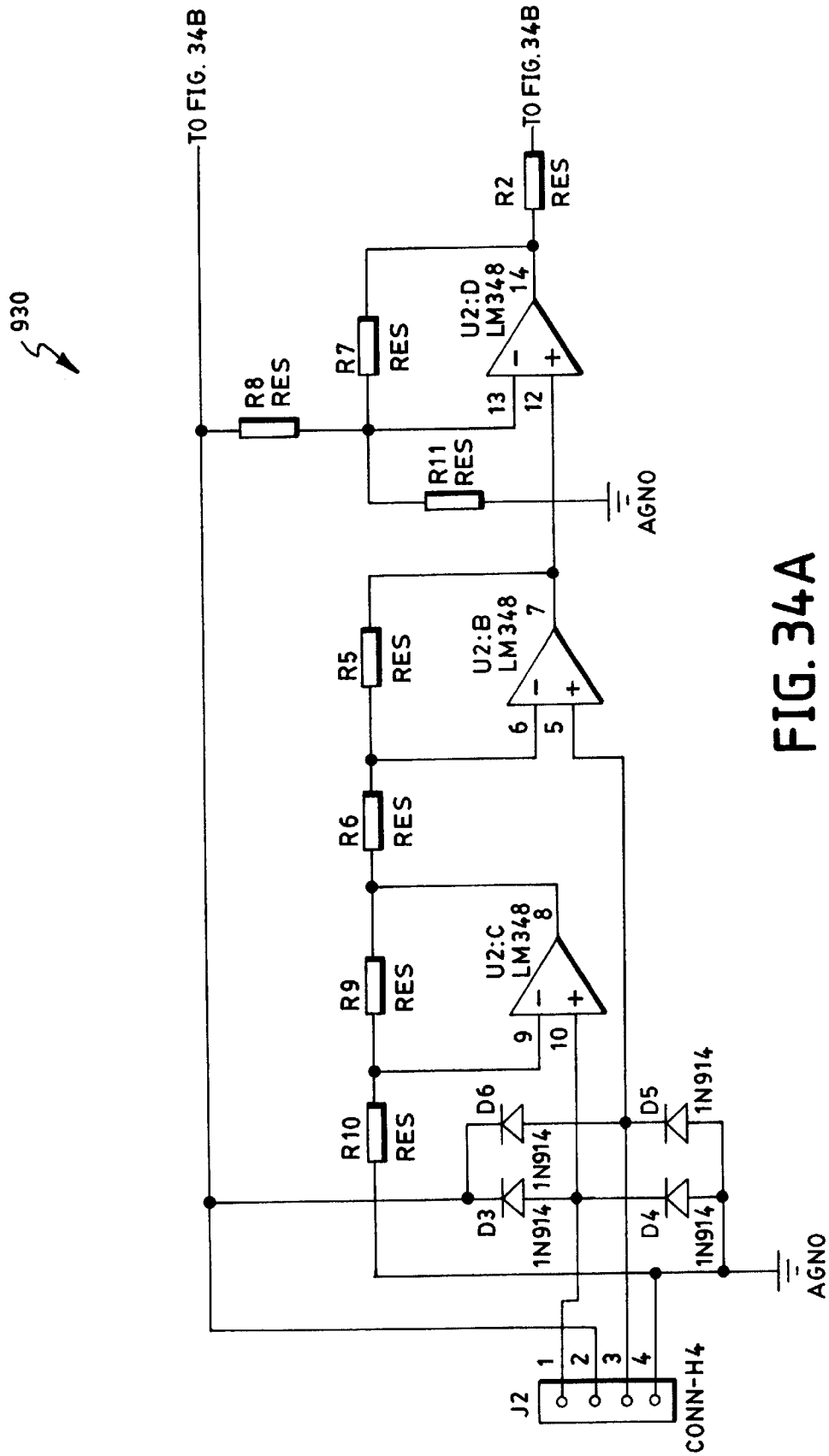
930
TO FIG. 34B
TO FIG. 34B
R2
RES
U2:D
LM348
14
R7
RES
R8
RES
13
12
R11
RES
AGNO
U2:B
LM348
7
R5
RES
6
5
R6
RES
U2:C
LM348
8
R9
RES
9
10
R10
RES
D6
1N914
D5
1N914
D3
1N914
D4
1N914
AGNO
J2
1
2
3
4
CONN-H4

FIG. 34A

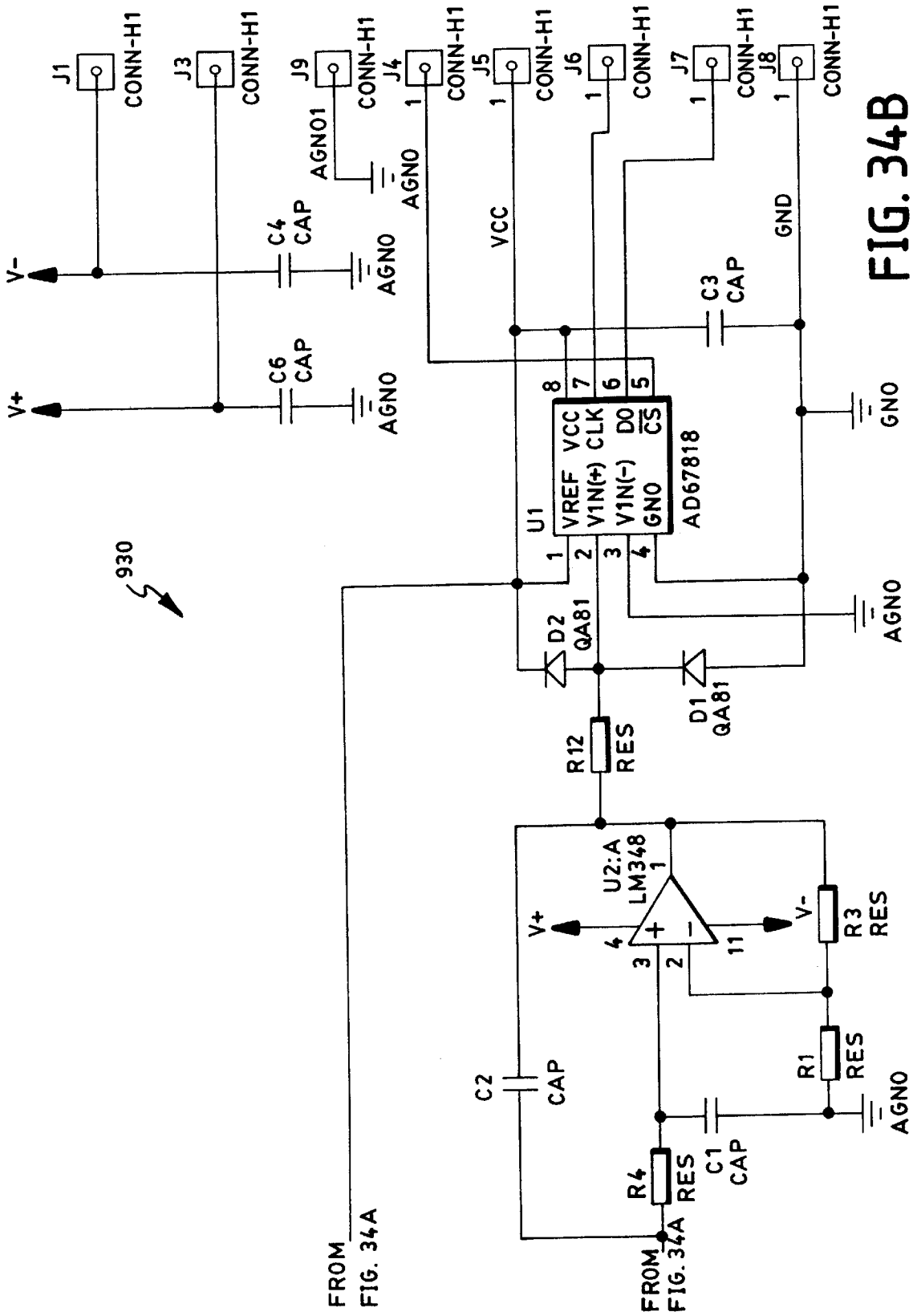
J1
CONN-H1
J3
CONN-H1
J9
CONN-H1
J4
CONN-H1
J5
CONN-H1
J6
CONN-H1
J7
CONN-H1
J8
CONN-H1
AGNO1
AGNO
VCC
GND
V-
V+
C4
CAP
C6
CAP
C3
CAP
U1
VREF
V1N(+)
V1N(-)
GNO
VCC
CLK
DO
CS
AD67818
930
D2
QA81
D1
QA81
R12
RES
U2:A
LM348
R3
RES
R1
RES
C2
CAP
C1
CAP
R4
RES
FROM
FIG. 34A
FROM
FIG. 34A

FIG. 34B

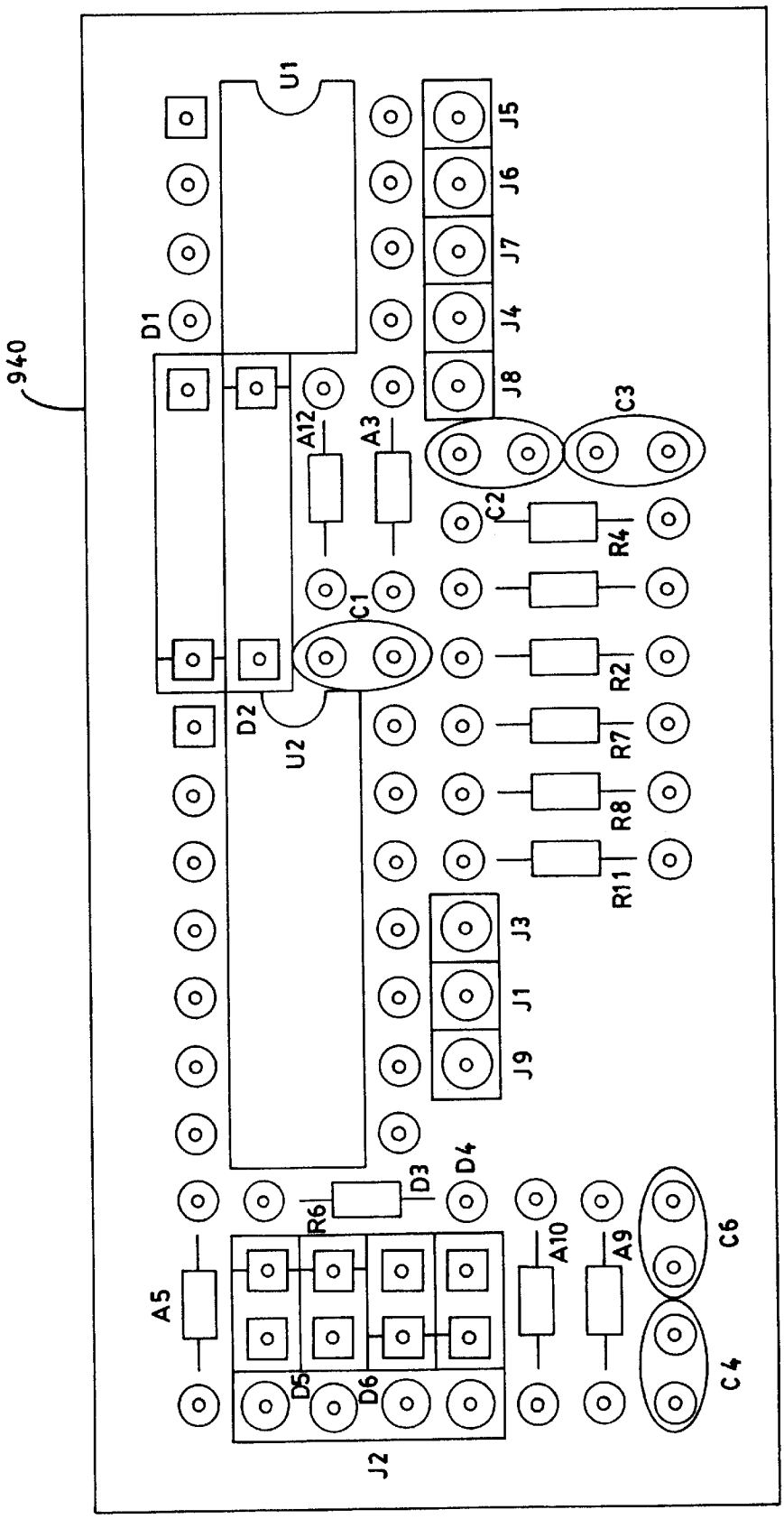
940
U1
D1
D2
U2
A12
A3
C1
C2
C3
J5
J6
J7
J4
J8
R4
R2
R7
R8
R11
J3
J1
J9
D3
D4
R6
A5
D5
D6
J2
A10
A9
C6
C4

FIG. 35

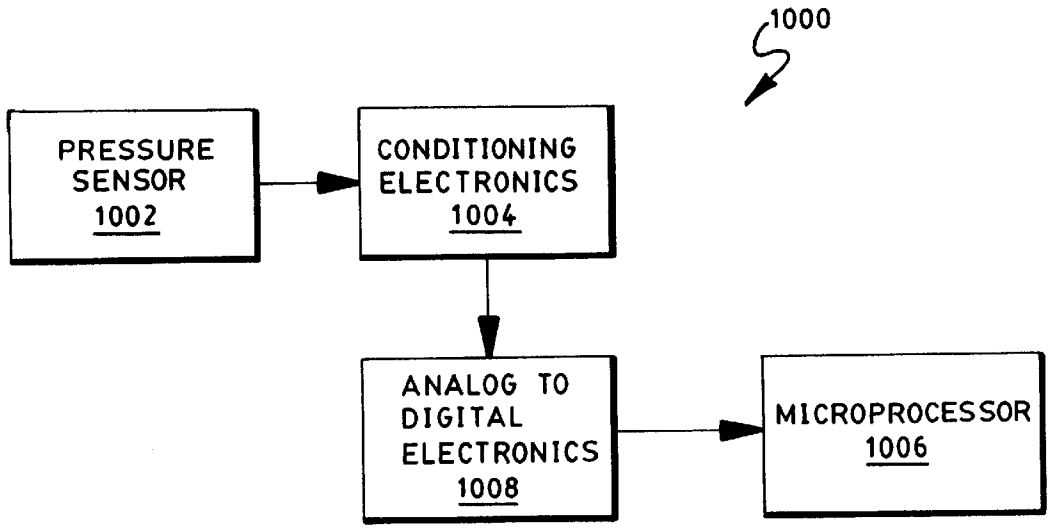
1000
PRESSURE SENSOR 1002
CONDITIONING ELECTRONICS 1004
ANALOG TO DIGITAL ELECTRONICS 1008
MICROPROCESSOR 1006

FIG. 36

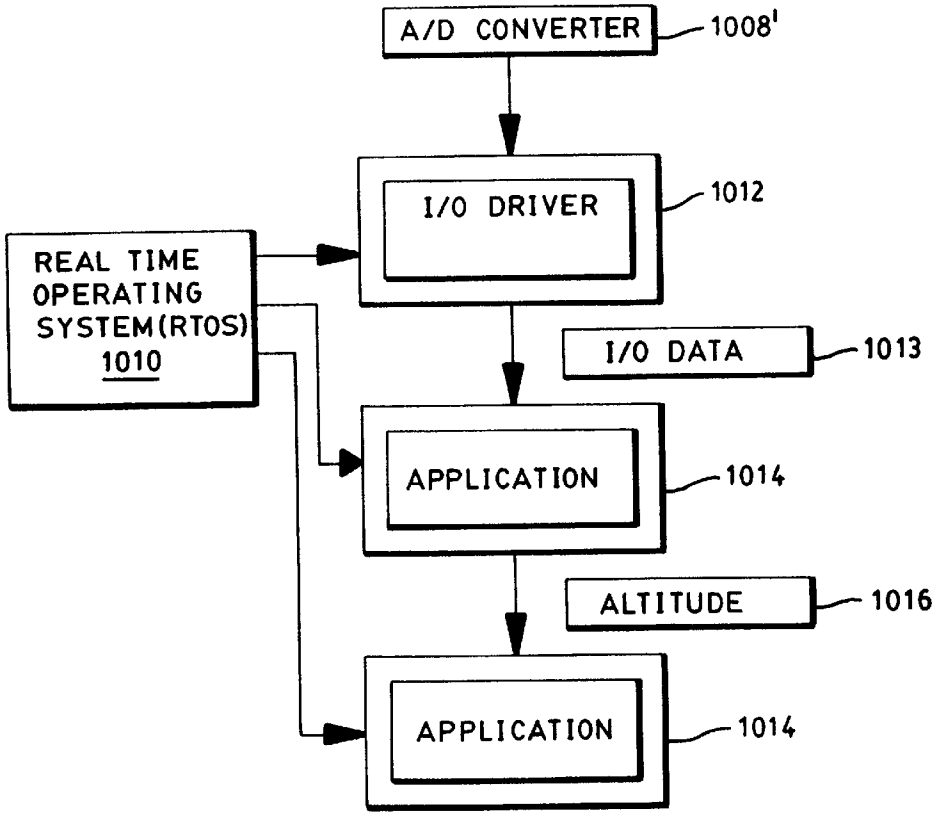
A/D CONVERTER
1008'
I/O DRIVER
1012
REAL TIME OPERATING SYSTEM(RTOS) 1010
I/O DATA
1013
APPLICATION
1014
ALTITUDE
1016
APPLICATION
1014

FIG. 37

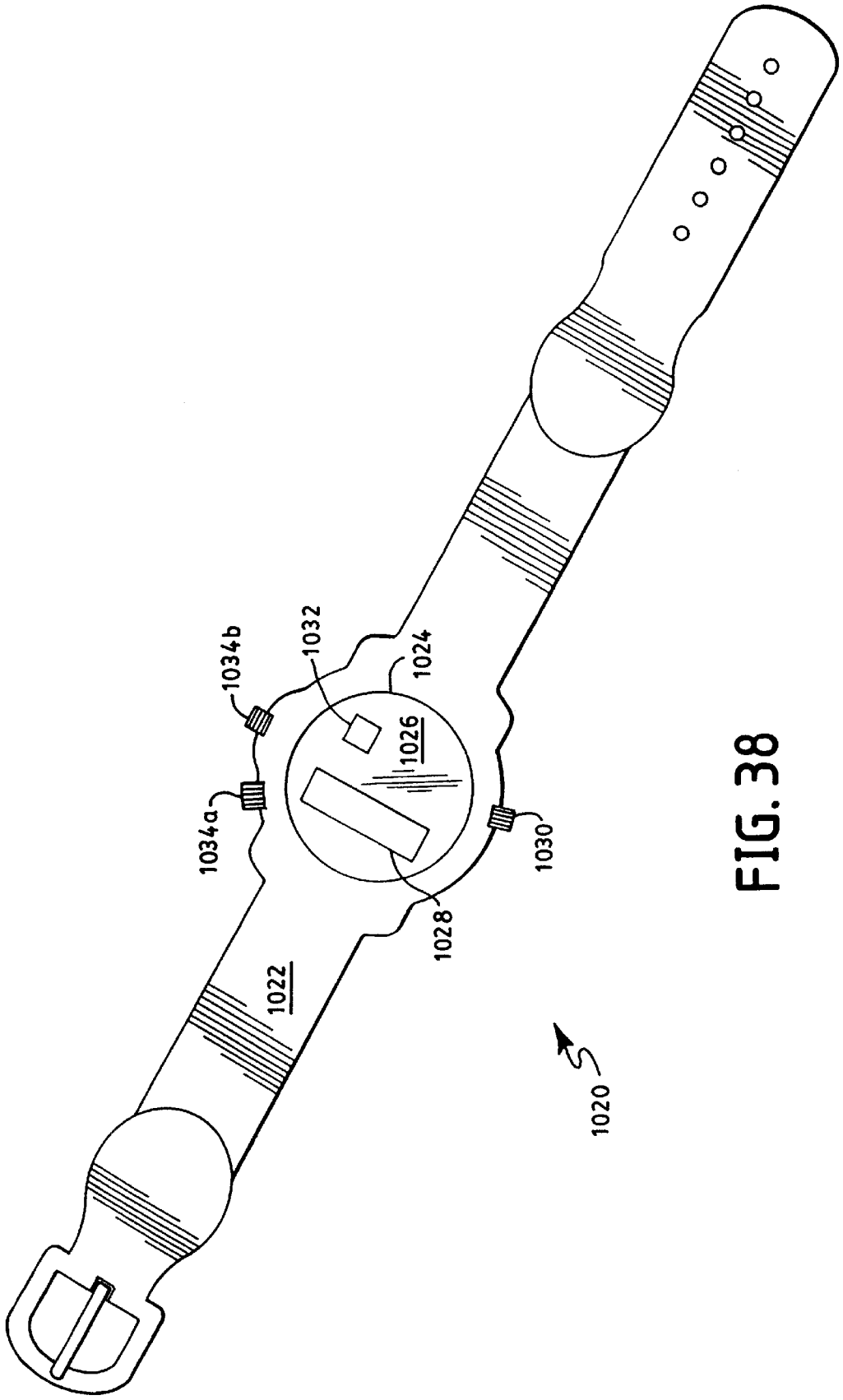

FIG. 38

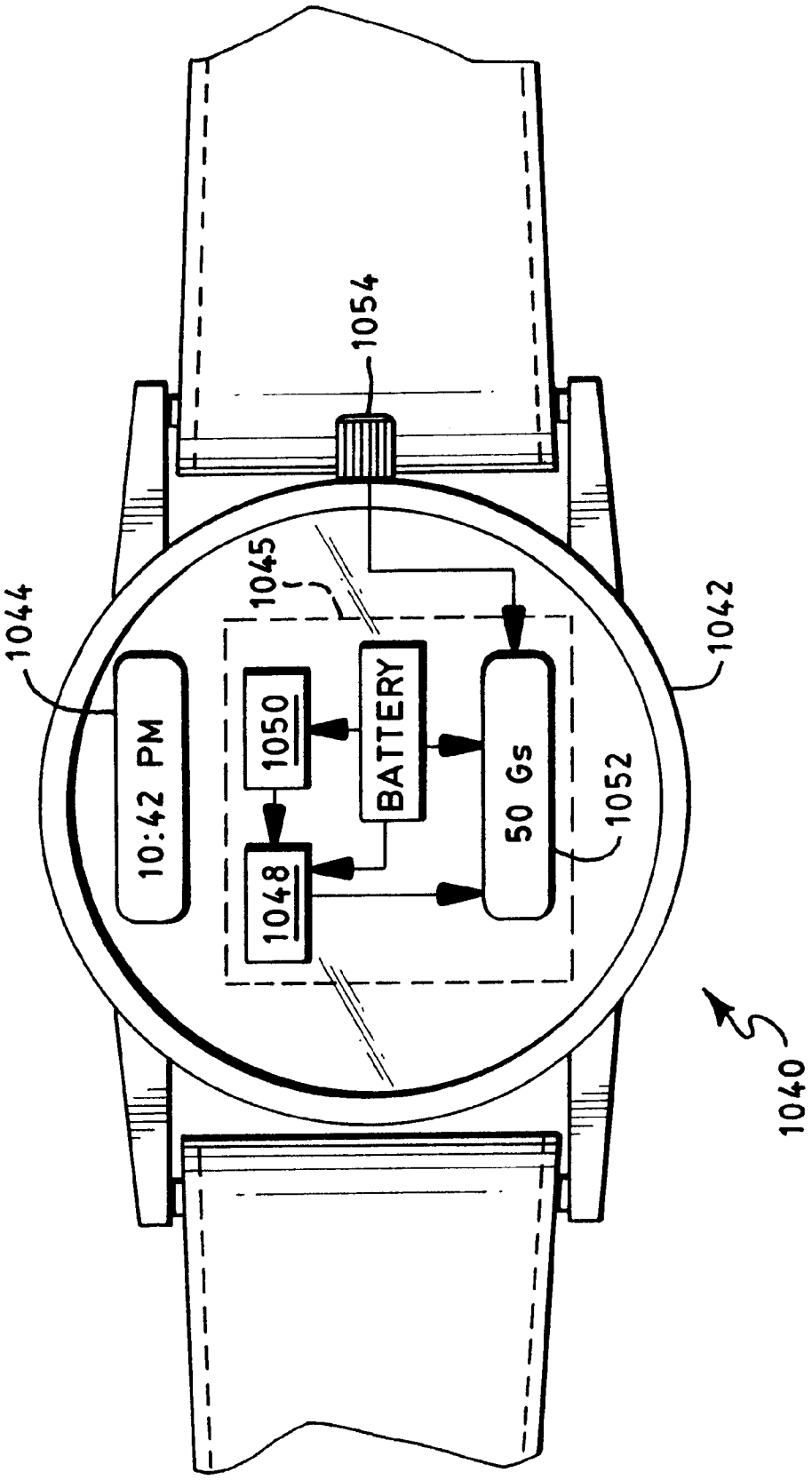

FIG. 39

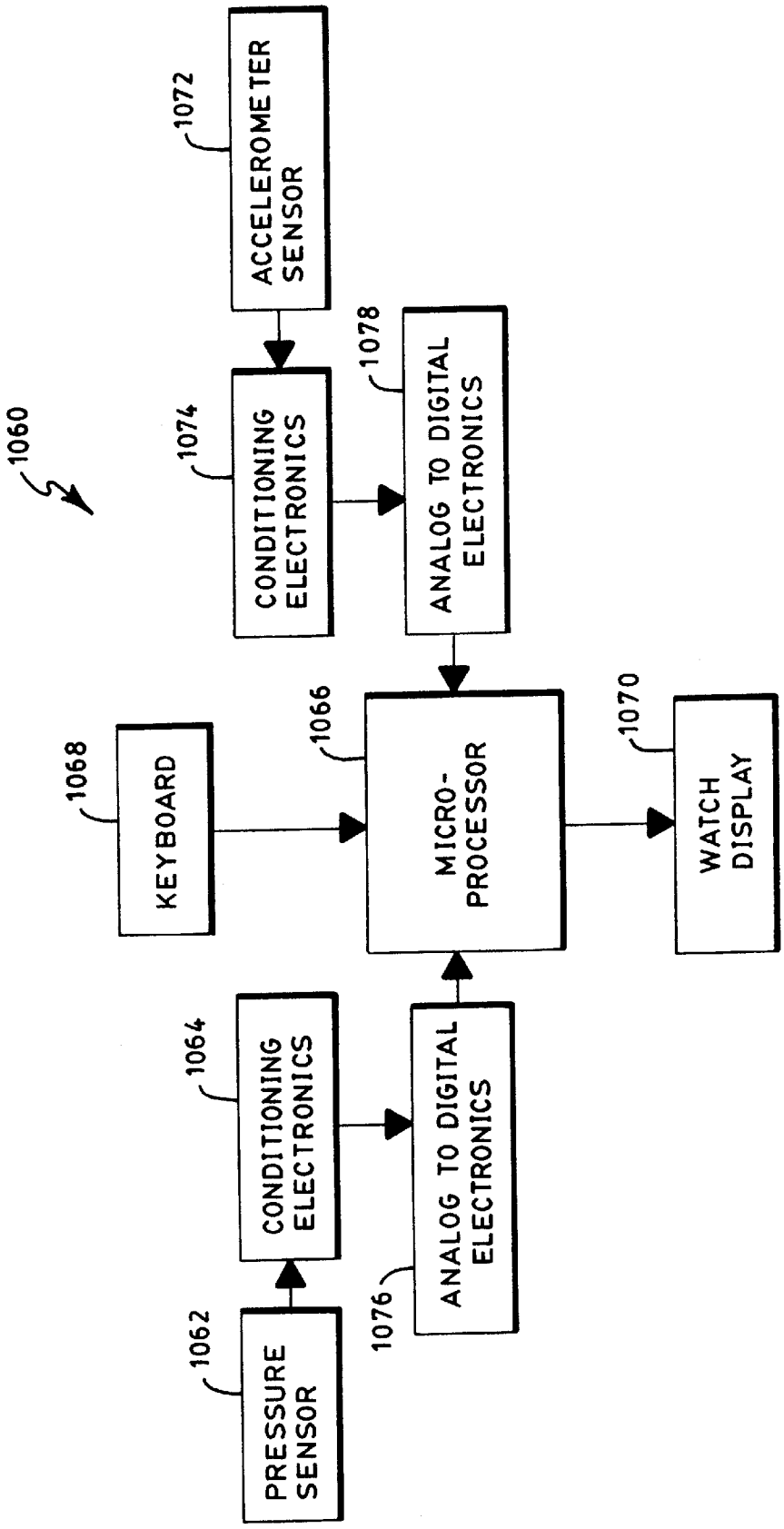
1060
1062
PRESSURE SENSOR
1064
CONDITIONING ELECTRONICS
1076
ANALOG TO DIGITAL ELECTRONICS
1068
KEYBOARD
1066
MICRO-PROCESSOR
1070
WATCH DISPLAY
1074
CONDITIONING ELECTRONICS
1078
ANALOG TO DIGITAL ELECTRONICS
1072
ACCELEROMETER SENSOR

FIG. 40

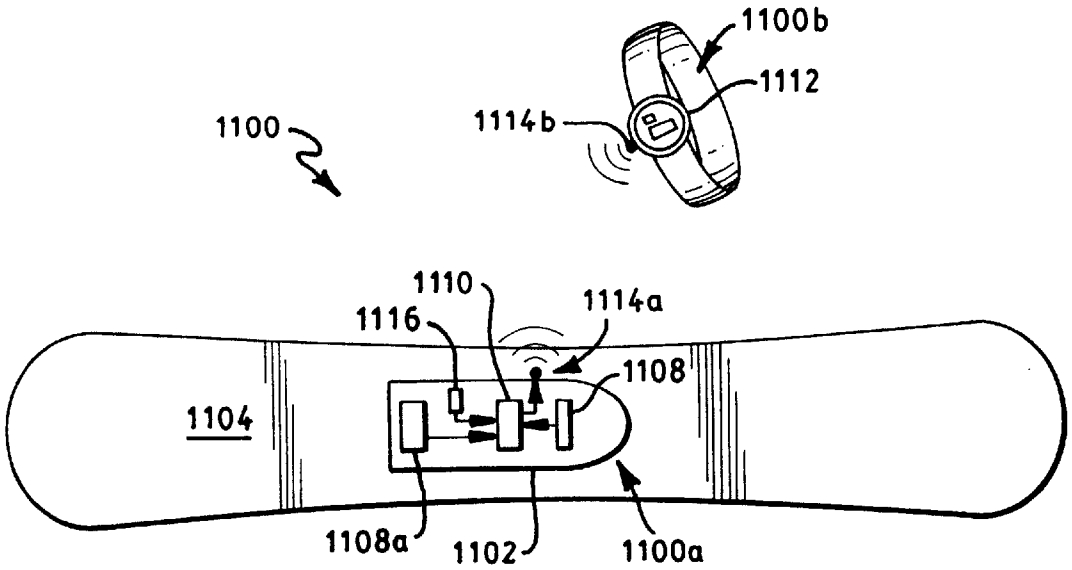
1100b
1112
1114b
1100
1110
1114a
1116
1108
1104
1108a
1102
1100a

FIG. 41

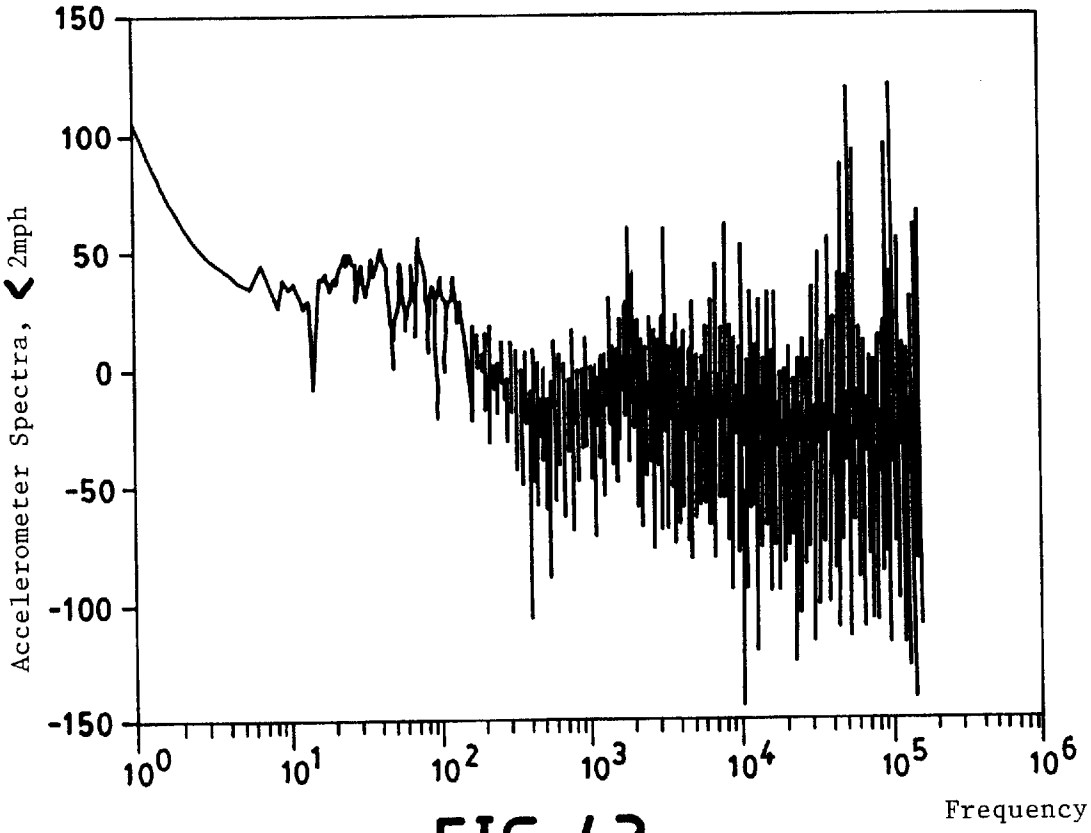
150
100
50
0
-50
-100
-150
Accelerometer Spectra, < 2mph
10^0
10^1
10^2
10^3
10^4
10^5
10^6
Frequency

FIG. 43

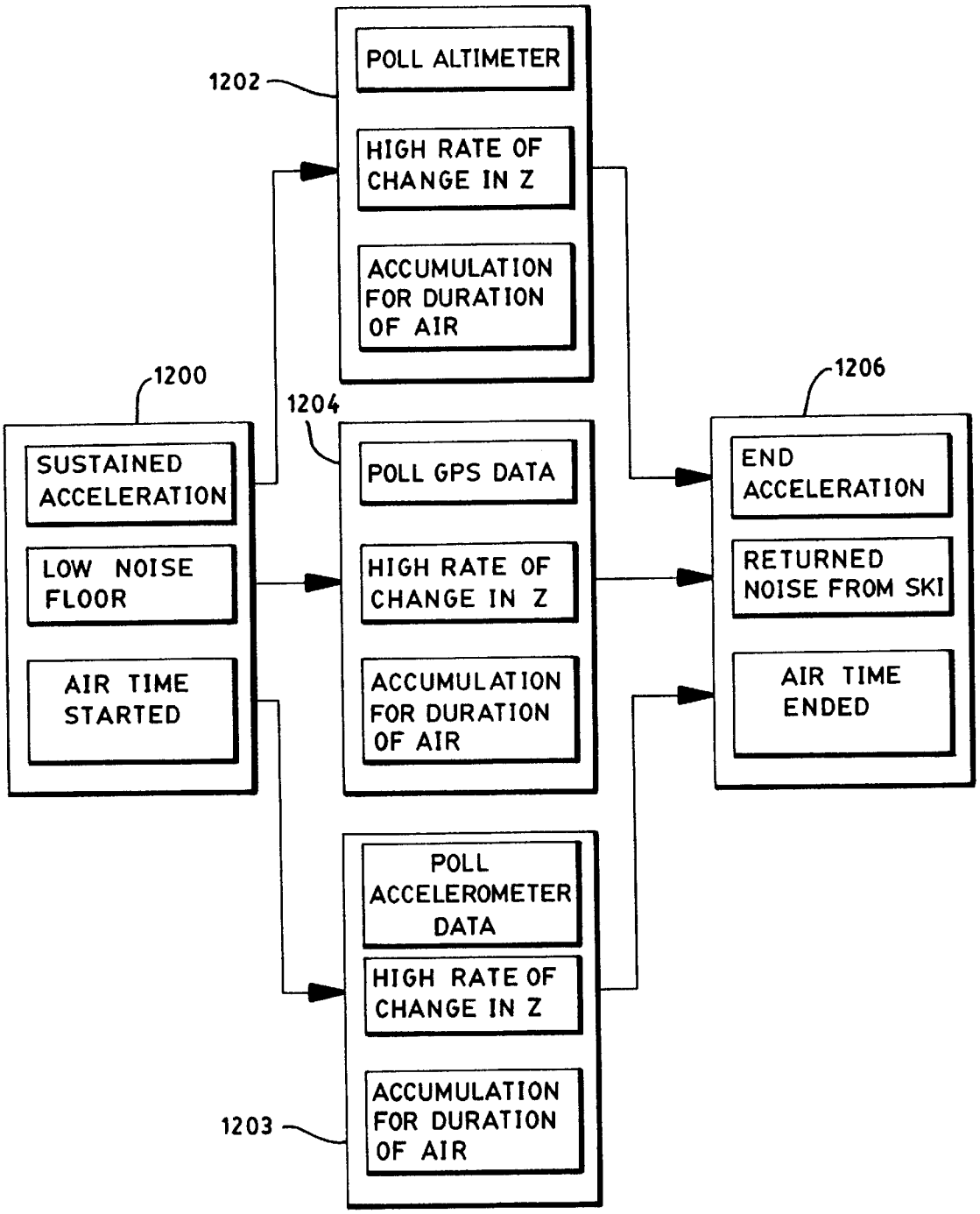
1202
POLL ALTIMETER
HIGH RATE OF CHANGE IN Z
ACCUMULATION FOR DURATION OF AIR
1200
SUSTAINED ACCELERATION
LOW NOISE FLOOR
AIR TIME STARTED
1204
POLL GPS DATA
HIGH RATE OF CHANGE IN Z
ACCUMULATION FOR DURATION OF AIR
1206
END ACCELERATION
RETURNED NOISE FROM SKI
AIR TIME ENDED
POLL ACCELEROMETER DATA
HIGH RATE OF CHANGE IN Z
ACCUMULATION FOR DURATION OF AIR
1203

FIG. 42

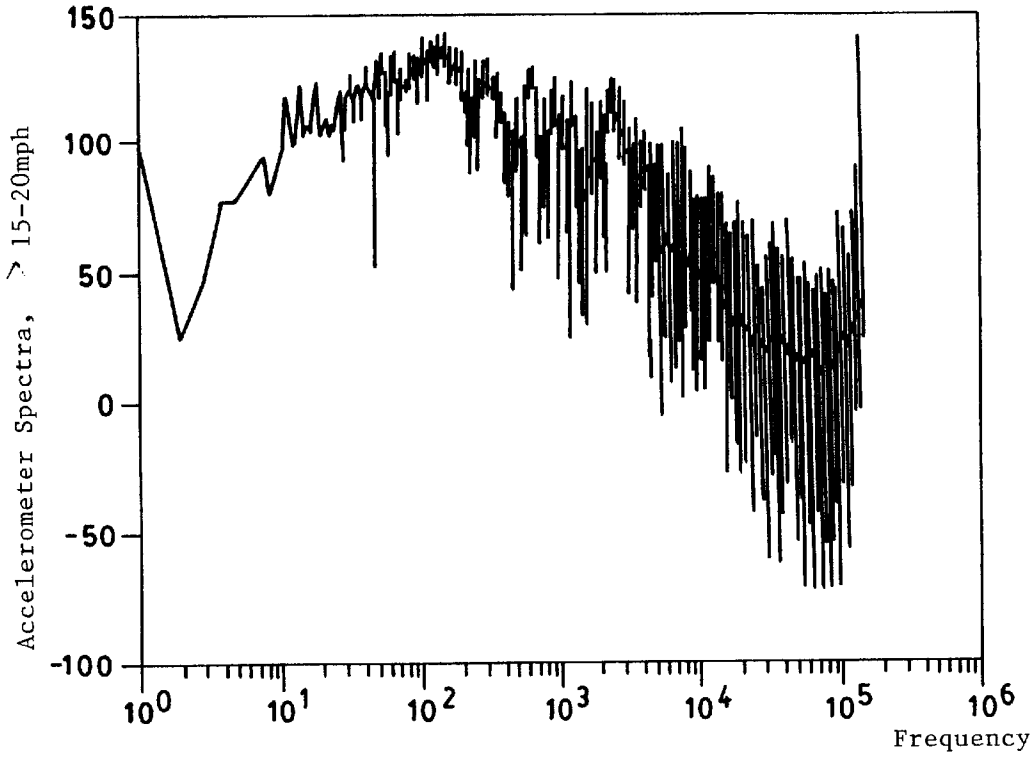
150
100
50
0
-50
-100
Accelerometer Spectra, > 15-20mph
10^0
10^1
10^2
10^3
10^4
10^5
10^6
Frequency

FIG. 44

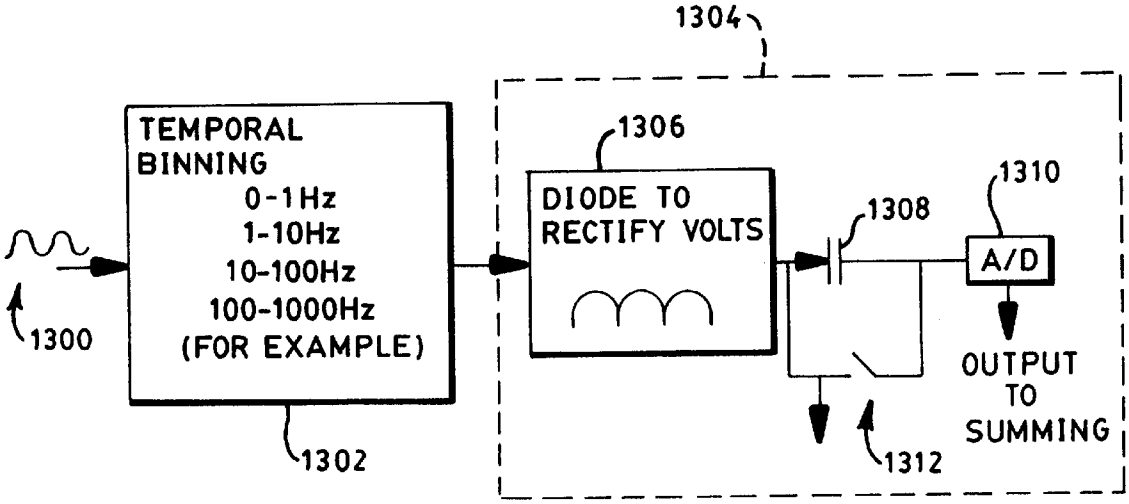
1304
TEMPORAL BINNING
0-1Hz
1-10Hz
10-100Hz
100-1000Hz
(FOR EXAMPLE)
1300
1302
1306
DIODE TO RECTIFY VOLTS
1308
1310
A/D
OUTPUT TO SUMMING
1312

FIG. 45

FIG. 46

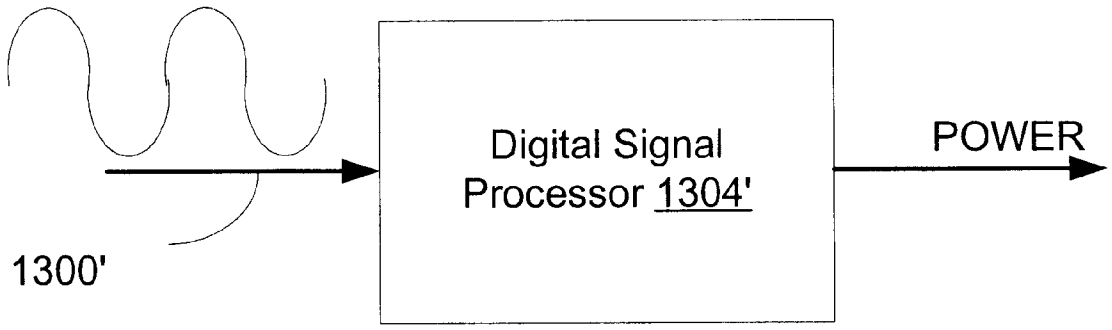

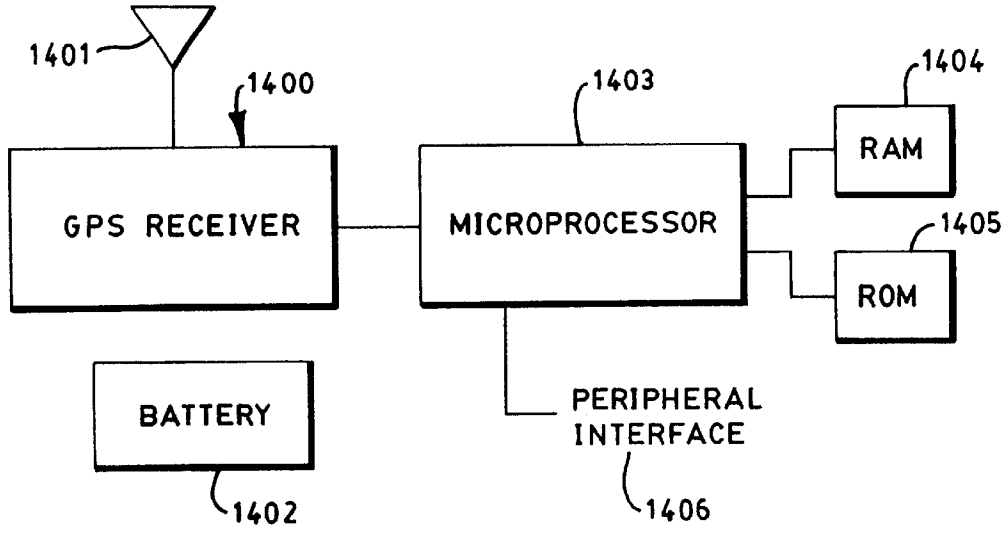
1401
1400
1403
1404
GPS RECEIVER
MICROPROCESSOR
RAM
1405
ROM
BATTERY
PERIPHERAL
INTERFACE
1402
1406

FIG. 47

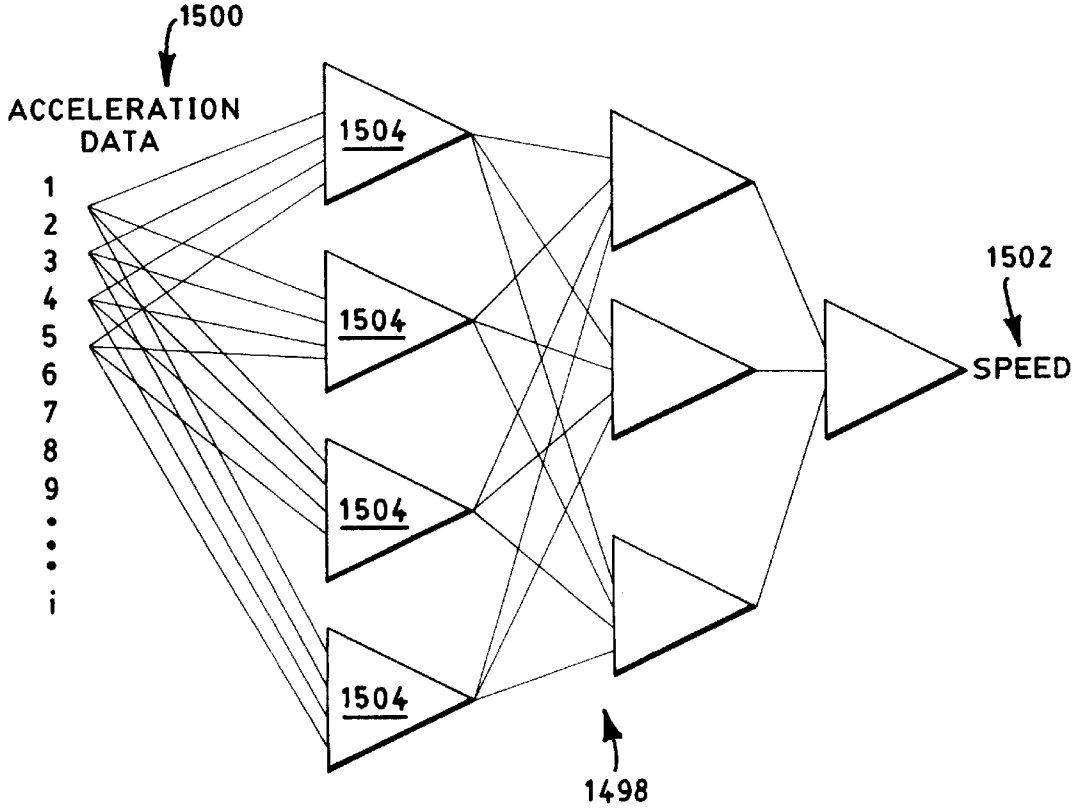
1500
ACCELERATION
DATA
1
2
3
4
5
6
7
8
9
i
1504
1504
1504
1504
1502
SPEED
1498

FIG. 48

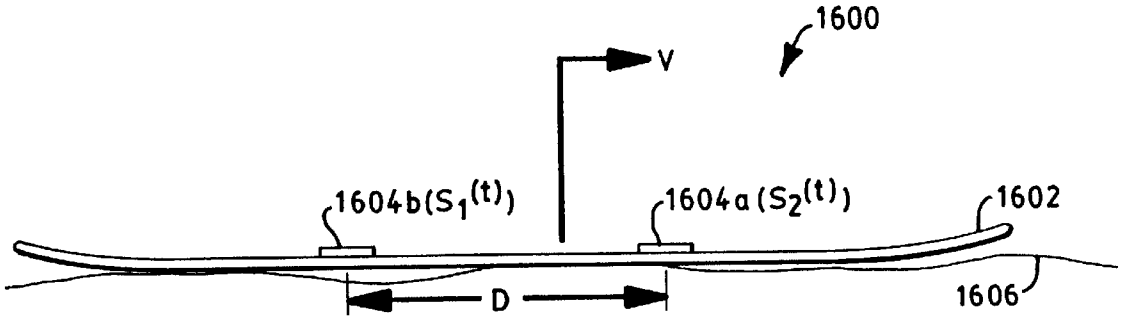

FIG. 49

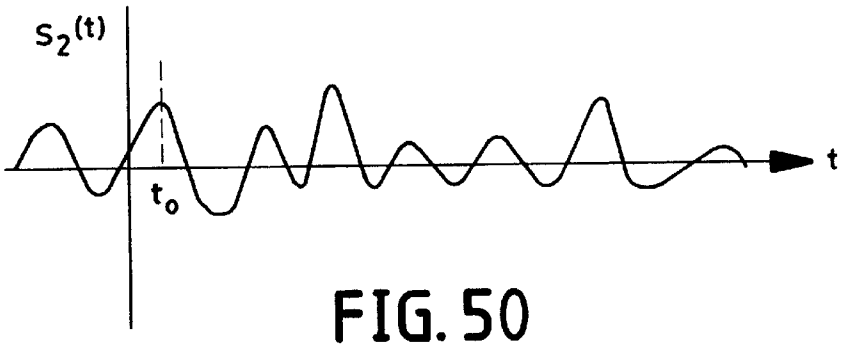

FIG. 50

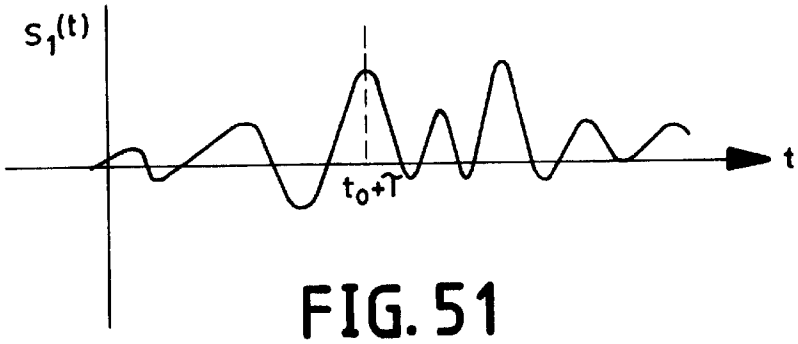

FIG. 51

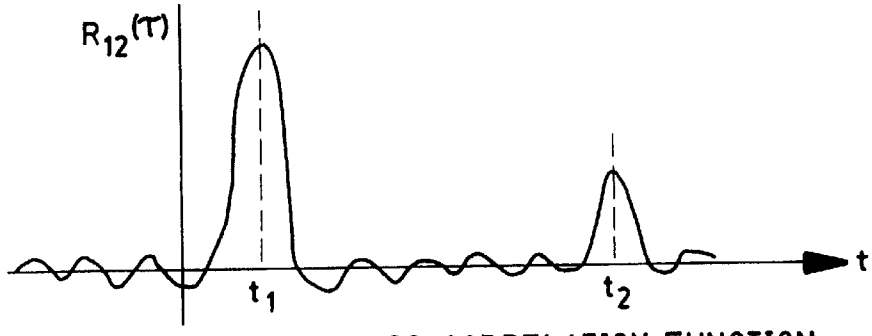

TYPICAL CROSS-CORRELATION FUNCTION

FIG. 52

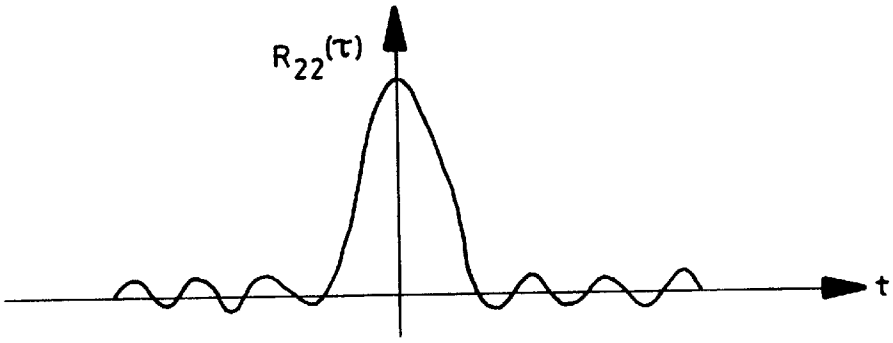

TYPICAL AUTO-CORRELATION FUNCTION

FIG. 53

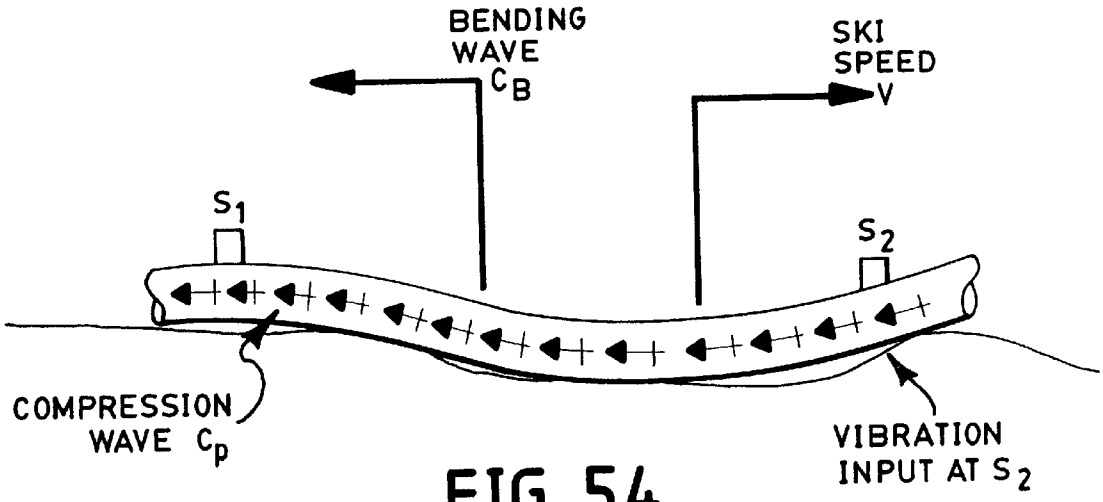

FIG. 54

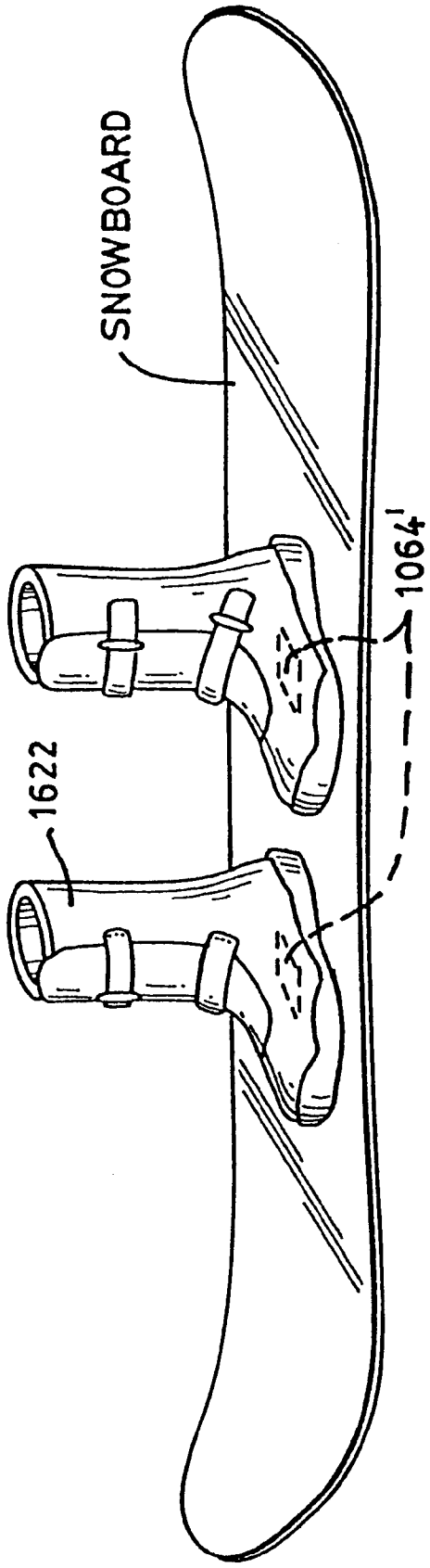

FIG. 55

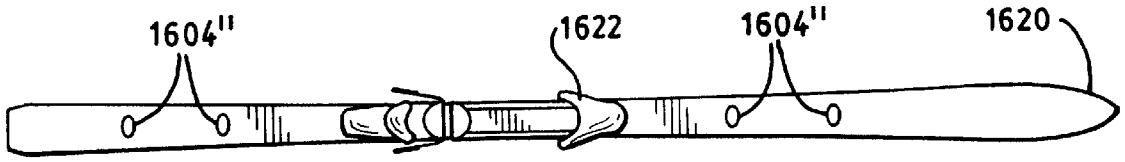

FIG. 56

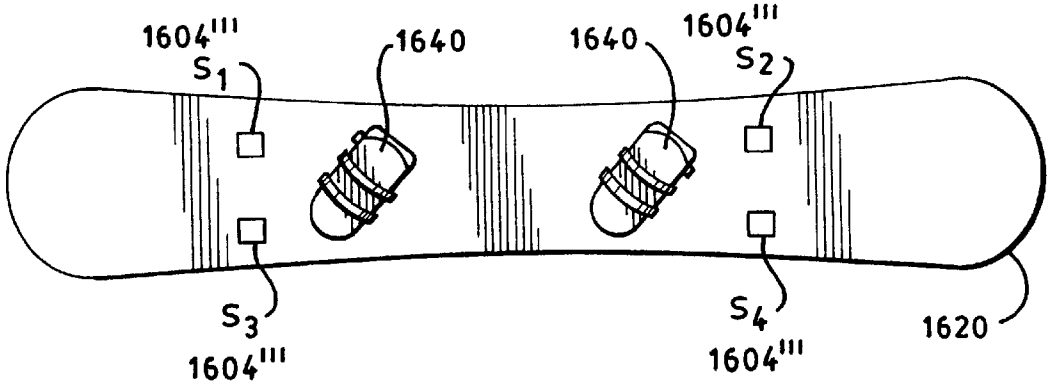

FIG. 57

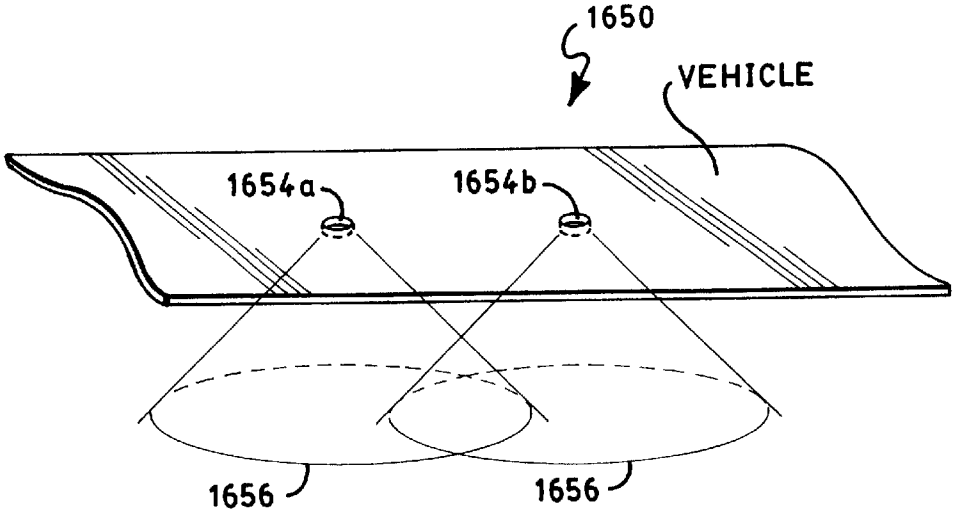

FIG. 58

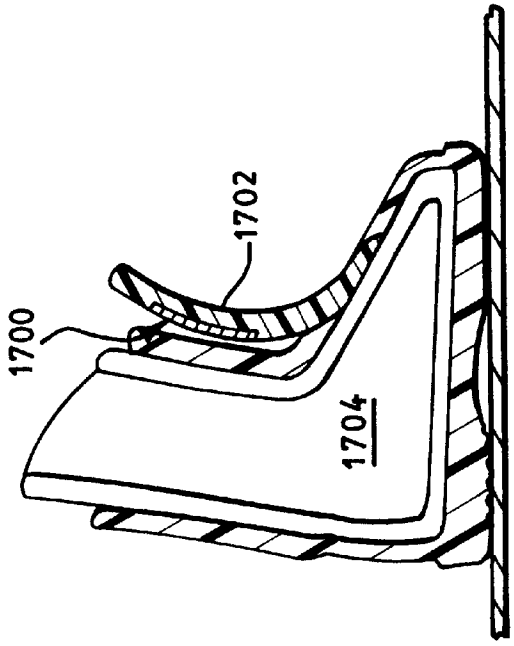
1700
1702
1704

FIG. 62

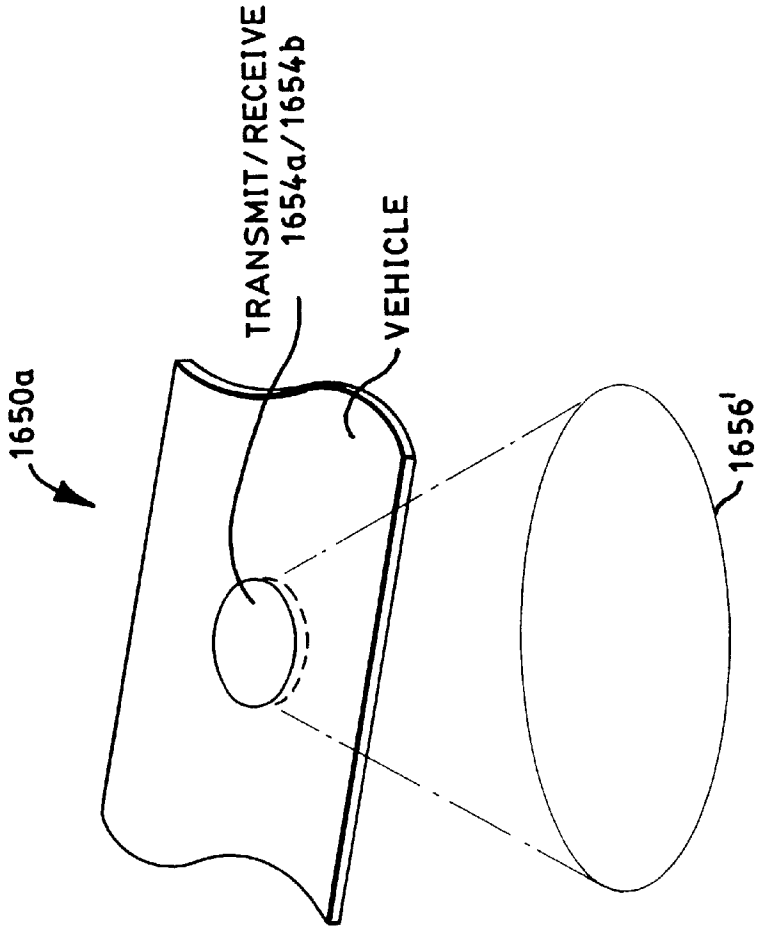
1650a
TRANSMIT/RECEIVE
1654a/1654b
VEHICLE
1656'

FIG. 59

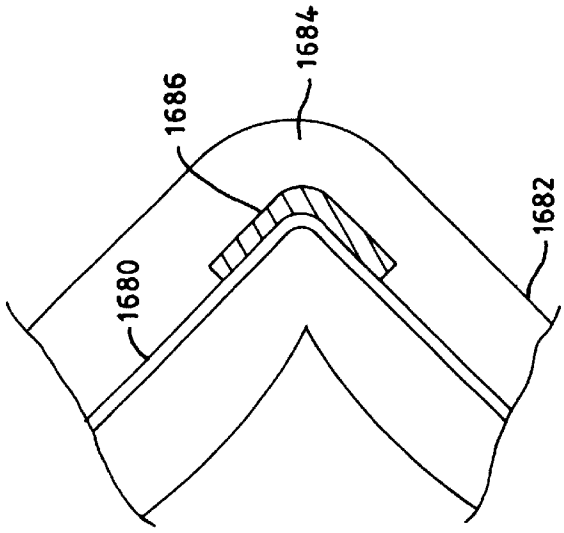

FIG. 61

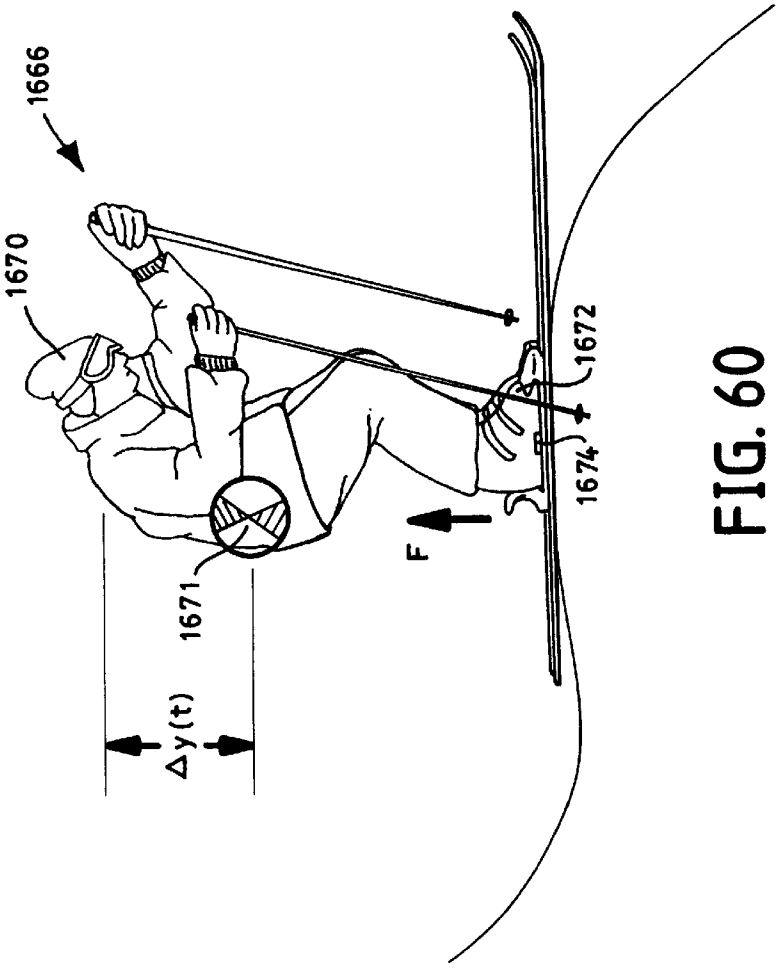

FIG. 60

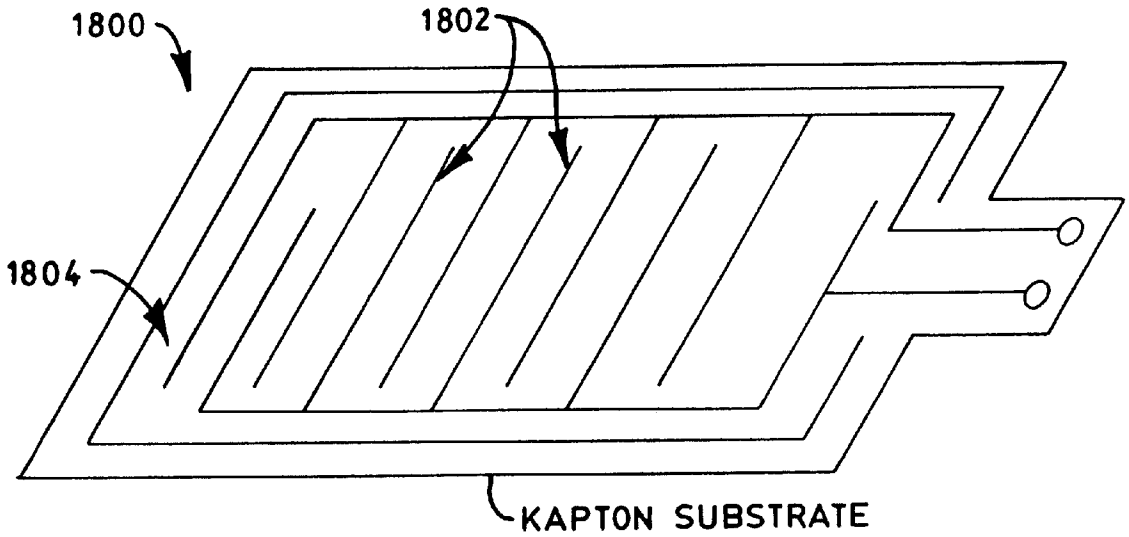

FIG. 63

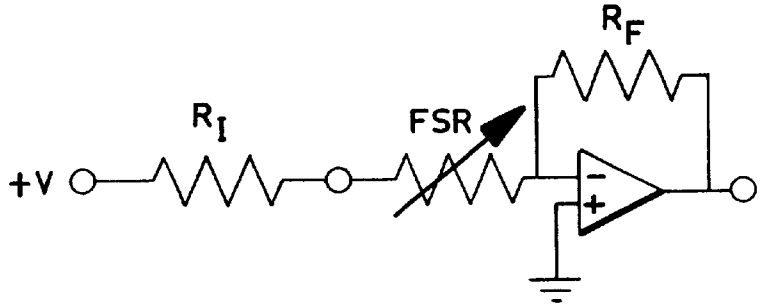

FIG. 64

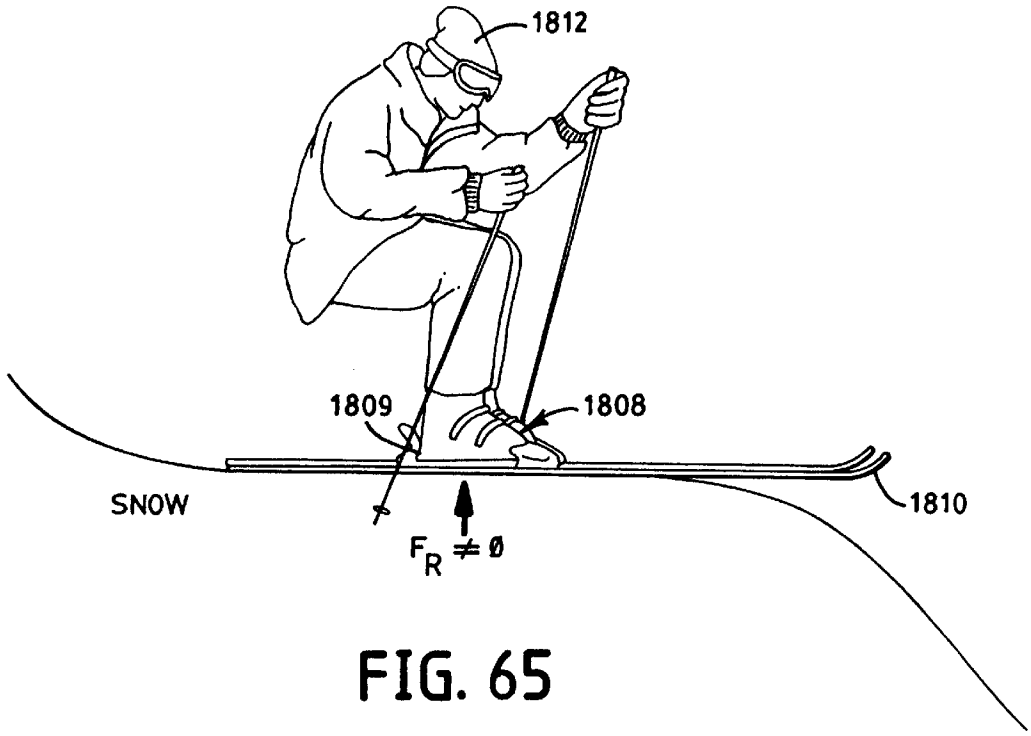
1812
1809
1808
SNOW
1810
$F_R \neq \emptyset$

FIG. 65

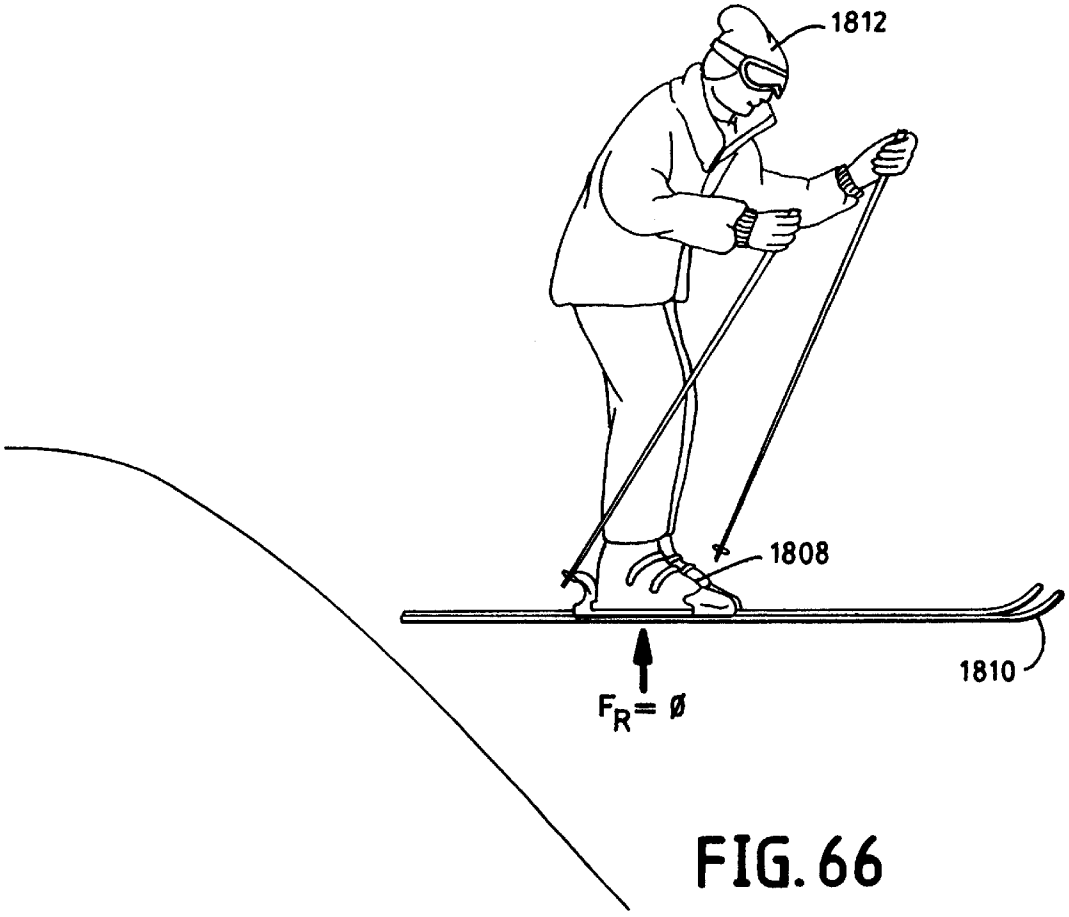
1812
1808
1810
$F_R = \emptyset$

FIG. 66

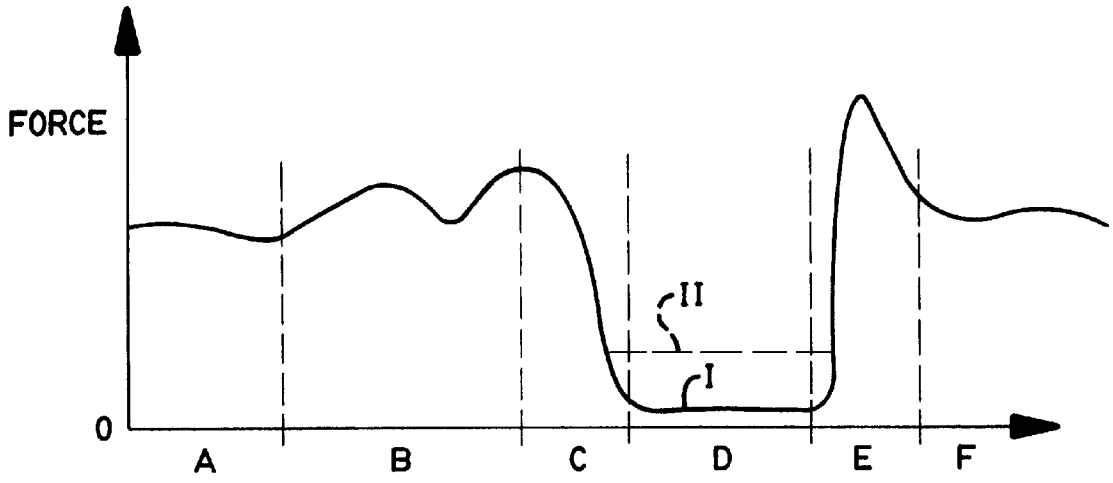

FIG. 67

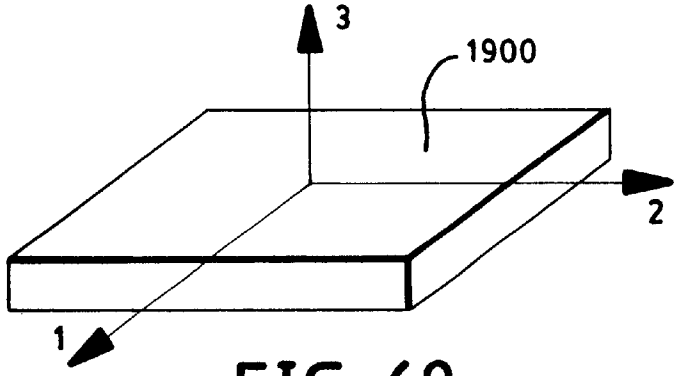

FIG. 68

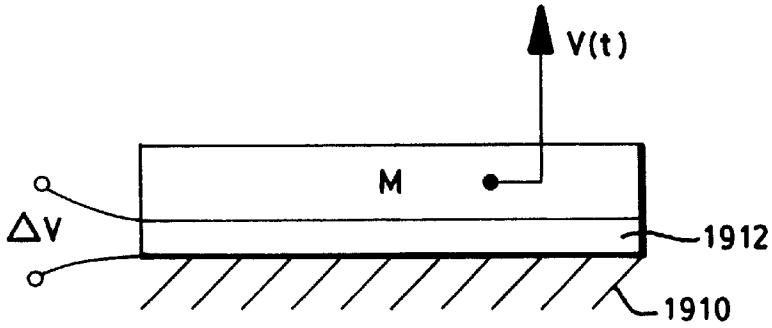

FIG. 69

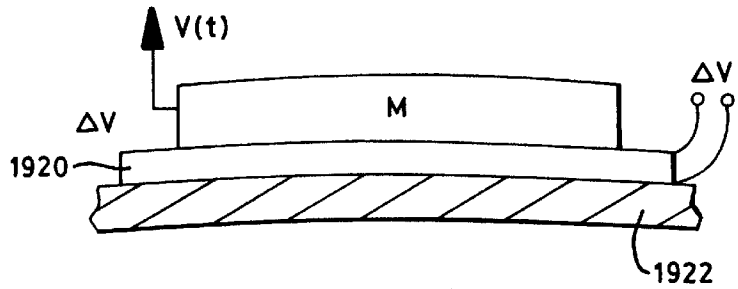

FIG. 70

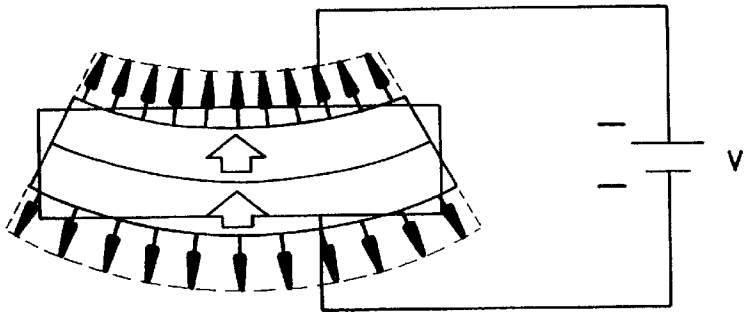

FIG. 71

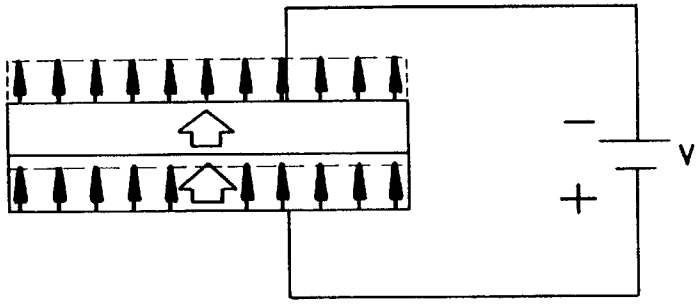

FIG. 72

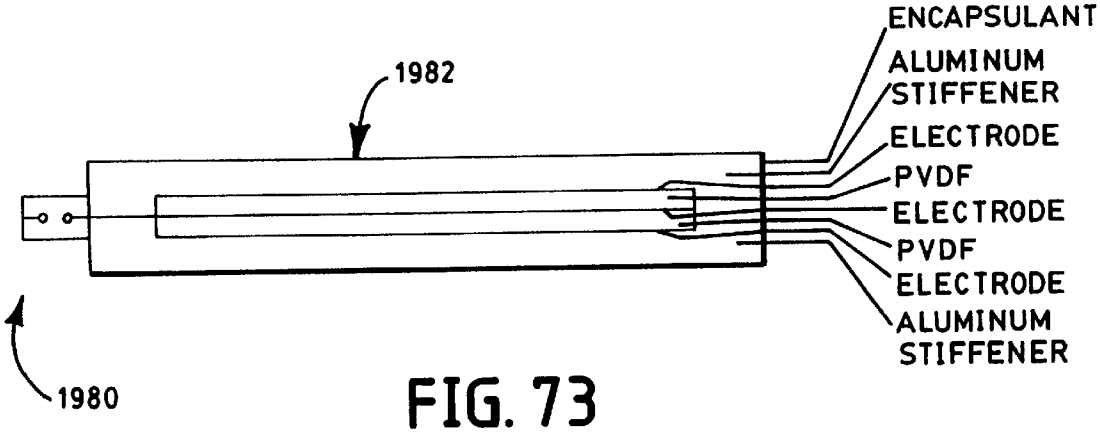

FIG. 73

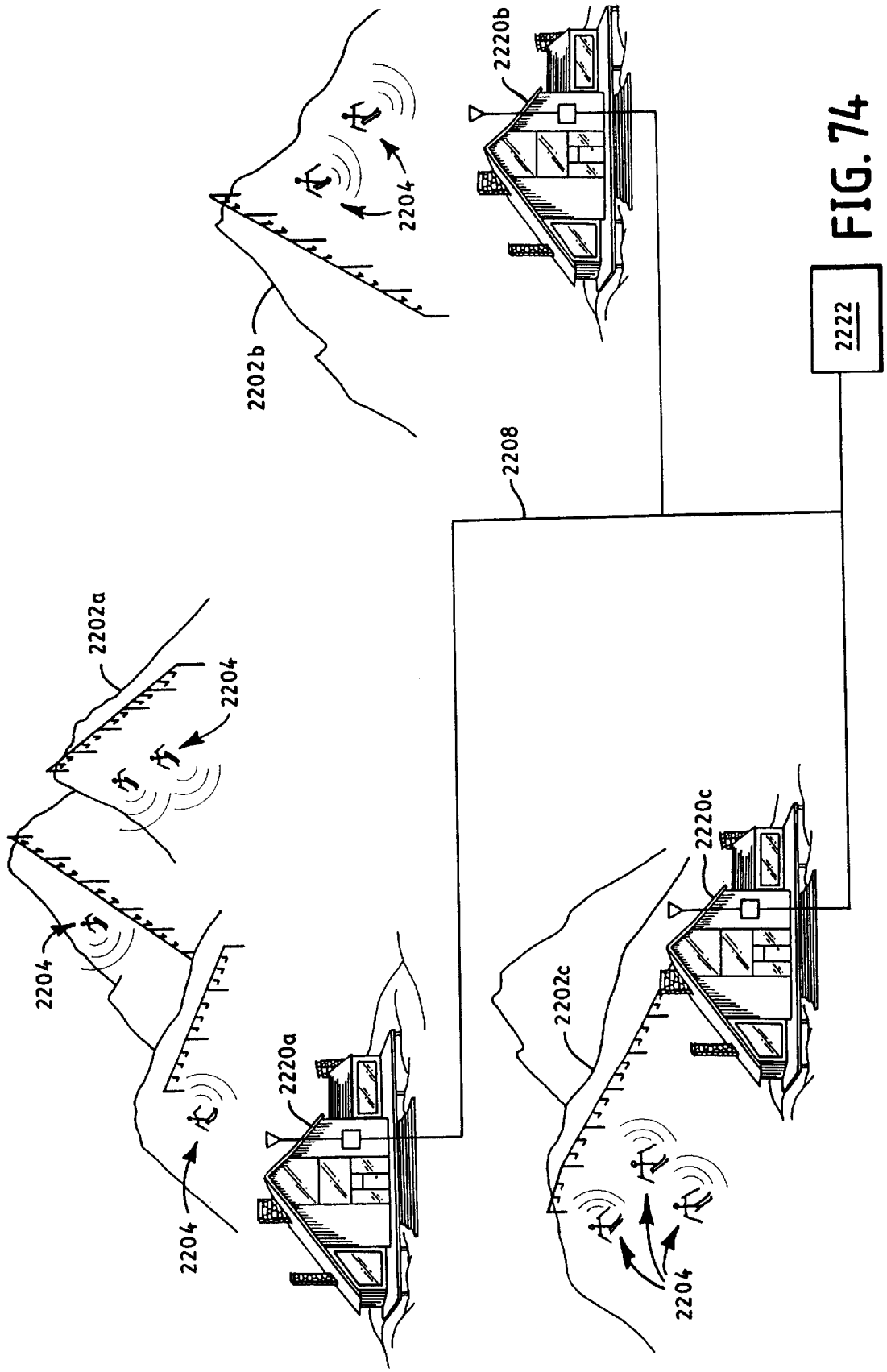
2202a
2204
2204
2204
2220a
2202b
2204
2220b
2208
2222
2202c
2220c
2204

FIG. 74

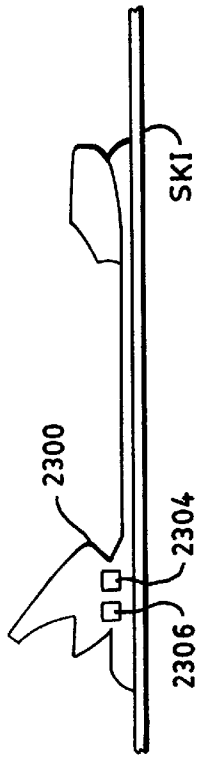

FIG. 76

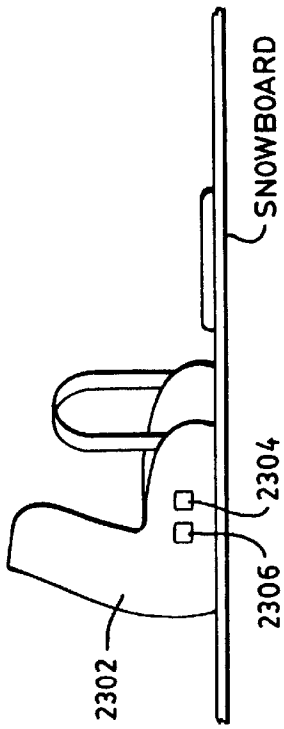

FIG. 77

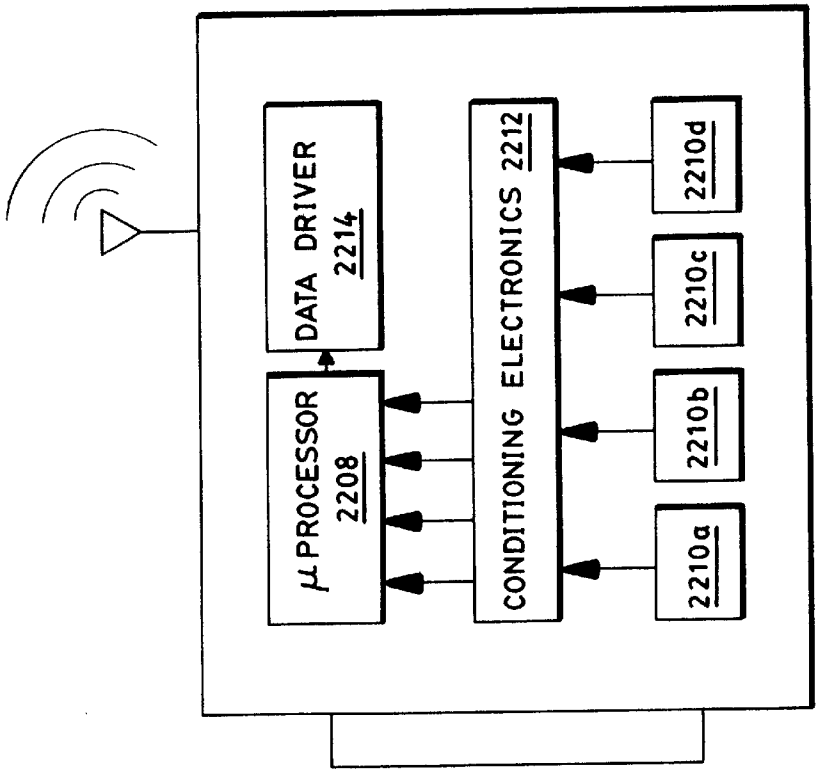

FIG. 75

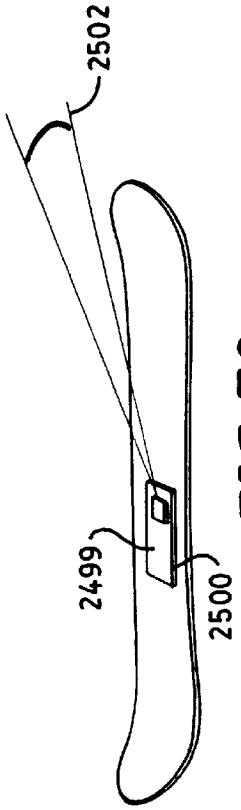

FIG. 79

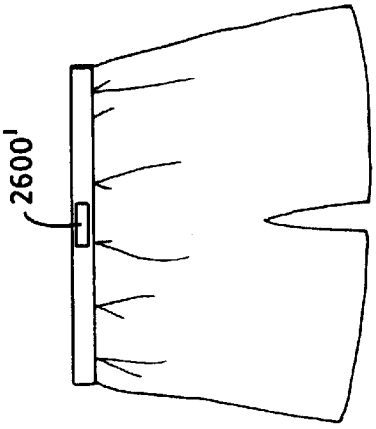

FIG. 81

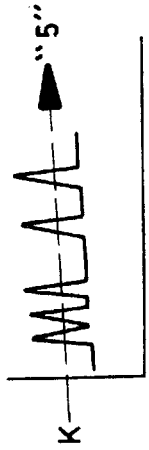

FIG. 78

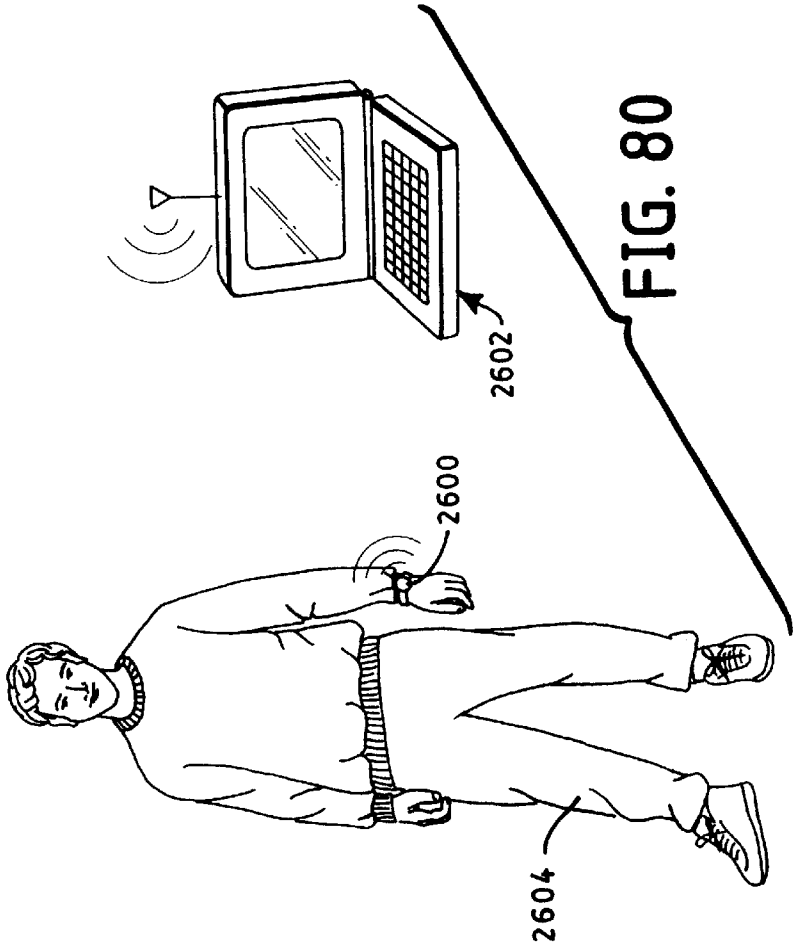

FIG. 80

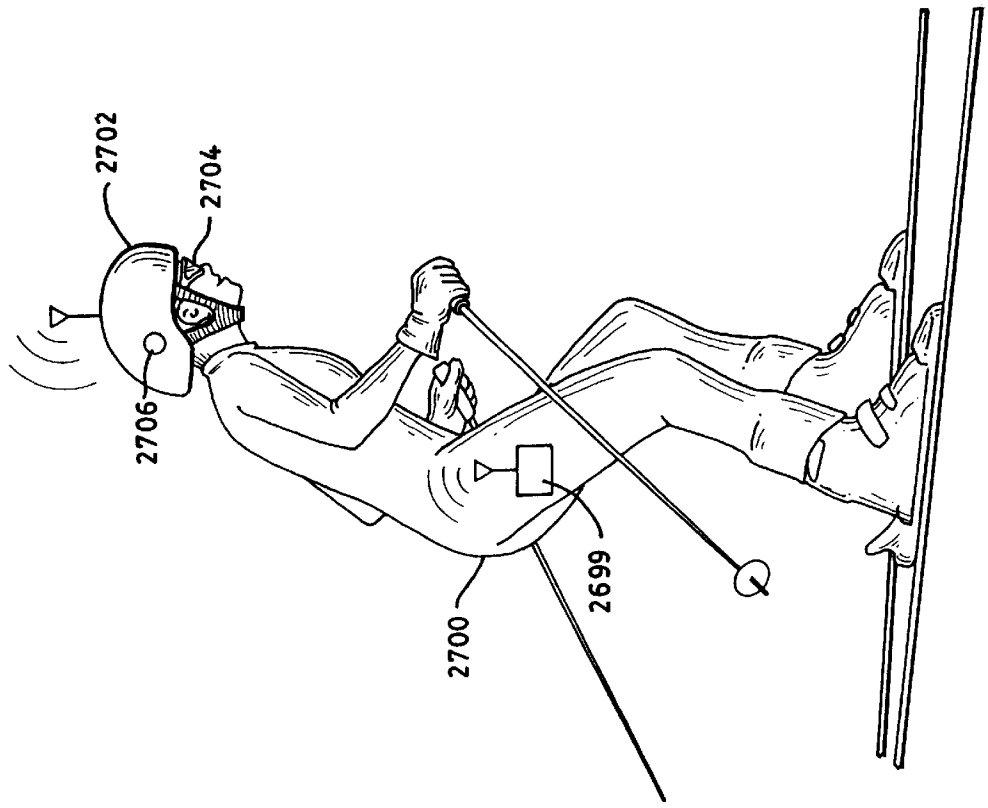
2702
2704
2706
2700
2699

FIG. 83

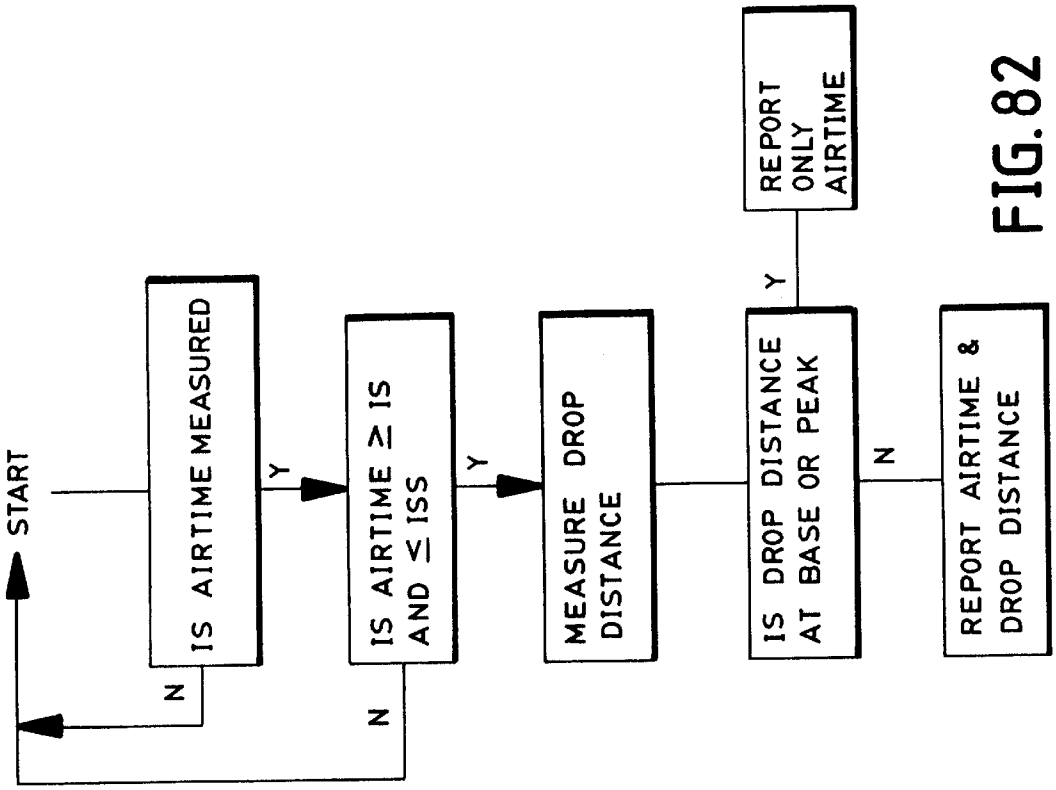
START
IS AIRTIME MEASURED
N
Y
IS AIRTIME ≥ IS AND ≤ ISS
N
Y
MEASURE DROP DISTANCE
IS DROP DISTANCE AT BASE OR PEAK
Y
REPORT ONLY AIRTIME
N
REPORT AIRTIME & DROP DISTANCE

FIG. 82

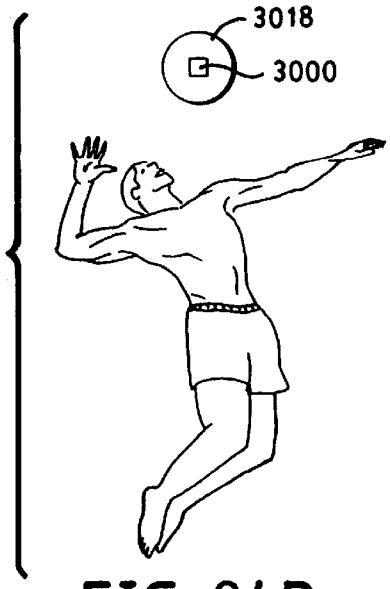

FIG. 84B

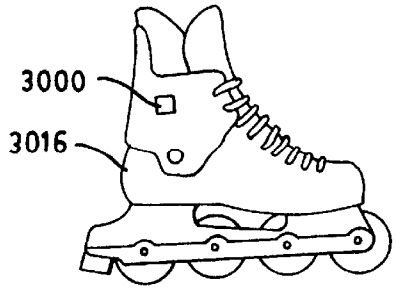

FIG. 84A

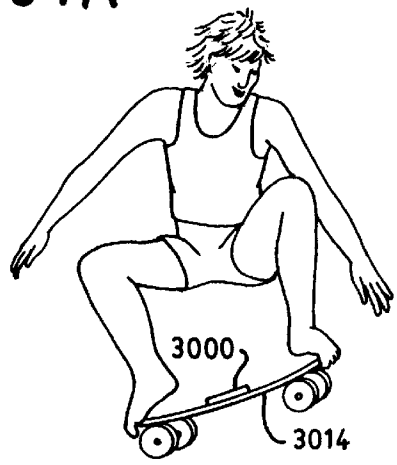

FIG. 84D

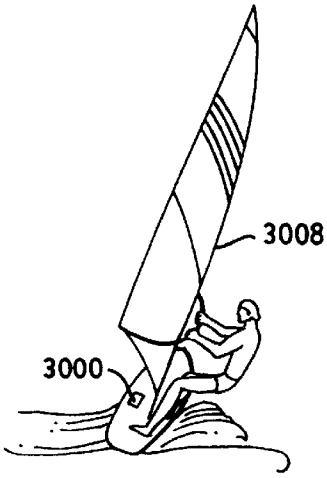

FIG. 84C

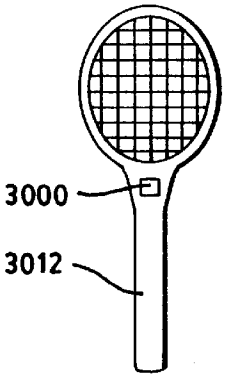

FIG. 84E

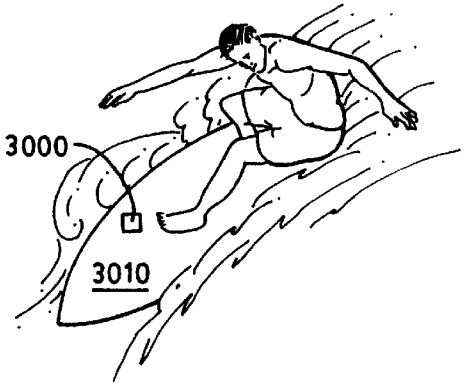

FIG. 84H

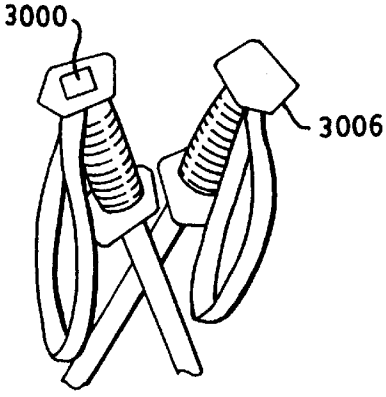

FIG. 84F

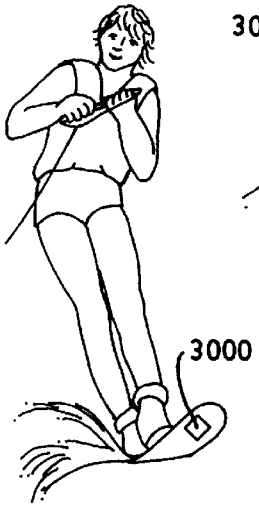

FIG. 84G

SPORT MONITORING SYSTEM FOR DETERMINING AIRTIME, SPEED, POWER ABSORBED AND OTHER FACTORS SUCH AS DROP DISTANCE

RELATED APPLICATIONS

This application is a continuation-in-part of commonly-owned and U.S. application Ser. No. 08/764,758 (now U.S. Pat. No. 5,960,380), filed on Dec. 12, 1996, U.S. application Ser. No. 08/867,083 (now U.S. Pat. No. 6,266,623), filed on Jun. 2, 1997, and U.S. Provisional Application No. 60/077,251, filed Mar. 9, 1998 each of which is expressly incorporated herein by reference.

FIELD OF THE INVENTION

The invention relates generally to monitoring and quantifying sport movement (associated either with the person or with the vehicle used or ridden by the person), including the specific parameters of "air" time, power, speed, and drop distance. The invention also has "gaming" aspects for connecting users across the Internet. The invention is particularly useful in sporting activities such as skiing, snowboarding, mountain biking, wind-surfing, skateboarding, roller-blading, kayaking, racing, and running, in which sporting persons expend energy, catch "air", move at varying speeds, and perform jumps.

BACKGROUND OF THE INVENTION

It is well known that many skiers enjoy high speeds and jumping motions while traveling down the slope. High speeds refer to the greater and greater velocities which skiers attempt in navigating the slope successfully (and sometimes unsuccessfully). The jumping motions, on the other hand, include movements which loft the skier into the air. Generally, the greater the skier's speed, the higher the skier's loft into the air.

The interest in high speed skiing is apparent simply by observing the velocity of skiers descending the mountain. The interest in the loft motion is less apparent; although it is known that certain enthusiastic snowboarders regularly exclaim "let's catch some air" and other assorted remarks when referring to the amount and altitude of the lofting motion.

The sensations of speed and jumping are also readily achieved in other sporting activities, such as in mountain biking, skating, roller-blading, wind-surfing, and skateboarding. Many mountain bikers and roller-bladers, like the aforementioned skiers, also crave greater speeds and "air" time.

However, persons in such sporting activities only have a qualitative sense as to speed and loft or "air" time. For example, a typical snowboarder might regularly exclaim after a jump that she "caught" some "big sky," "big air" or "phat air" without ever quantitatively knowing how much time really elapsed in the air.

Speed or velocity also remain unquantified. Generally, a person such as a skier can only assess whether they went "fast", "slow" or "average", based on their perception of motion and speed (which can be grossly different from actual speed such as measured with a speedometer or radar gun).

There are also other factors that sport persons sometimes assess qualitatively. For example, suppose a snowboarder skis a double-diamond ski slope while a friend skis a green, easy slope. When they both reach the bottom, the "double-diamond" snowboarder will have expended more energy than the other, generally, and will have worked up a sweat; while the "green" snowboarder will have had a relatively inactive ride down the slope. Currently, they cannot quantitatively compare how rough their journeys were relative to one another.

OBJECTS OF THE INVENTION

It is, accordingly, an object of the invention to provide systems and methods for determining "air" time associated with sport movements.

It is another object of the invention to provide systems and methods for determining the speed of participants and/or vehicles associated with sport movements.

It is yet another object of the invention to provide improvements to sporting vehicles which are ridden by sporting participants, and which provide a determination of speed, airtime, drop distance and/or power of the vehicle.

Still another object of the invention is to provide systems and methods for determining the amount of "power" or energy absorbed by a person during sporting activities. One specific object is to provide a gauge of energy spent by a sporting participant as compared to others in the same sport, to provide a quantitative comparison between two or more participants.

Yet another object of the invention is to provide the "drop distance" associated with a jump; and particularly the drop distance which occurs within "airtime".

Still another object of the invention is to provide a gaming system to quantitatively compare airtime, drop distance, power, and/or speed between several participants, regardless of their location.

These and other objects of the invention will become apparent in the description which follows.

SUMMARY OF THE INVENTION

As discussed herein, "air" or "loft" time (or "airtime") refer to the time spent off the ground during a sporting movement. For example, airtime according to the invention can include a snowboarder catching air off of a mogul or a ledge. Typically, airtime is greater than one-half (or one-third) second and less than six seconds. In "extreme" sporting events, the maximum airtime can increase up to about ten or fifteen seconds.

In most cases, it is useful to specify the lower and upper limits of airtime—e.g., from one second to five seconds—so as to reduce processing requirements and to logic out false airtime data. More particularly, the following description provides several techniques and methods for determining airtime. One technique, for example, monitors the vibration of the user's vehicle (e.g., a ski or snowboard) moving on the ground; and senses when the vibration is greatly reduced, indicating that the vehicle is off the ground. However, when such a user stands in line for the chair-lift, she might remain motionless for thirty seconds or more. By restricting the upper limit to five seconds, a system of the invention can be made to ignore conditions such as standing in line. Similarly, when a user walks slowly, there are cyclical periods of relatively small vibration (e.g., when the user lifts his foot off the ground). Therefore, a lower limit of one-half second or one second are appropriate; so that any detected "airtime" that falls below that lower limit is ignored and not stored.

In another aspect of the invention, the measurement of airtime is used to quantify the efficiency by which a person or sport vehicle remain on the ground. By way of example,

speed skiers desire to remain on the ground; and the invention thus provides a system which monitors the person and/or vehicle (e.g., the slalom ski) to detect airtime. This information is fed back to the person (in real time or in connection with a later review of video) so that he or she can improve their posture to reduce unwanted airtime. In such applications, airtime is typically less than about three or four seconds; and the lower limit is essentially zero (that is, providing miniscule airtime data can be appropriate for training purposes).

As used herein, "power" refers to the amount of energy expended by a person or vehicle during a sporting activity, typically over a period such as one ski run. The following description provides several systems, techniques and methods for determining power. Power need not correspond to actual energy units; but does provide a measure of energy expended by the person or vehicle as compared to other persons and vehicles in the same sporting activity. Power can be used to quantify "bragging rights" between sport enthusiasts: e.g., one user can quantify that he expended more energy, or received more "punishment", as compared to a friend. Power can refer to the amount of "G's" absorbed during a given period of activity. Power is typically quantified over a period that is selectable by the user. For example, power can be determined over successive one-second periods, or successive five second periods, or successive one minute periods, or successive five minute periods, or other periods. Power can also be measured over a manually selected period. For example, two snowboarders can initialize the period at the beginning of a run down a ski slope and can stop their period at the end of the run.

"Speed" refers the magnitude of velocity as measured during a sport activity. Speed generally refers to the forward direction of the moving sportsman.

"Drop distance" refers to the height above the ground as experienced by a user or vehicle during a sport activity. Drop distance preferably corresponds to a measured airtime period. For example, a snowboarder who takes a jump off of a ledge might drop thirty feet (drop distance) in three seconds (airtime). Drop distance can also specifically refer to maximum height above the ground for a given jump (for example, a user on a flat surface can first launch upwards off a jump and return to the same level but experience a five foot drop distance).

The invention thus provides systems and methods for quantifying airtime, power, speed and/or drop distance to quantify a user's sport movement within one or more of the following activities: skiing, snowboarding, wind-surfing, skate-boarding, roller-blading, kayaking, white water racing, water skiing, wake-boarding, surfing, racing, running, and mountain biking. The invention can also be used to quantify the performance of vehicles upon which users ride, e.g., a snowboard or ski or mountain bike.

The following U.S. patents provide useful background for the invention and are herein incorporated by reference: U.S. Pat. Nos. 5,343,445; 4,371,945; 4,757,714; 4,089,057; 4,722,222; 5,452,269; 3,978,725; and U.S. Pat. No. 5,295,085.

In one aspect, the invention provides a sensing unit which includes a controller subsystem connected with one or more of the following sensors (each of which is described herein): an airtime sensor, a speed sensor, a power sensor, and a drop distance sensor. The controller subsystem includes a microprocessor or microcontroller and can include preamplifiers and A/D converters to interface with the sensor(s) (alternatively, the sensor contains such circuitry). The controller subsystem can further include logic circuitry and/or software modules to logic out unwanted data from the sensors (e.g., airtimes does not correspond to reasonable loft times). Preferably, the controller subsystem also includes digital memory to store parameters for the sensors and to store data such as power, airtime, speed and drop distance (collectively "performance data") for later retrieval. A battery typically is used to power the controller subsystem. The battery can also be used for the sensors, if required. However, one preferred sensor which can function for any of the sensors is the piezoelectric foils such as made from AMP SENSORS™. These foils do not require power and rather generate a voltage in response to input forces such as sound. A display can be integrated with the sensing unit to provide direct feedback to the performance data. In one aspect, a user interface is also integrated with the sensing unit to provide user control of the sensing unit, e.g., to include an ON/OFF switch and buttons to select for acquisition or display of certain performance data.

The sensing unit of one aspect is a stand-alone unit, and thus includes a housing. The housing is rugged to survive rigorous sporting activity. Preferably, the housing provides a universal interface which permits mounting of the unit to a variety of vehicle platforms, e.g., onto a ski, snowboard, mountain bike, windsurfer, roller blades, etc. The universal interface is preferably a conformal surface which conveniently permits mounting of the sensing unit to a plurality of surfaces, e.g., a flat surface such as a snowboard, and a round bar such as on a mountain bike.

Alternatively, the sensing unit can be integrated into objects already associated with the sporting activity. In one aspect, the sensing unit is integrated into the ski boot or other boot. In another aspect, the sensing unit is integrated into the binding for a ski boot or snowboarder boot. In still another aspect, the sensing unit is integrated into a ski, snowboard, mountain bike, windsurfer, windsurfer mast, roller blade boot, skate-board, kayak, or other sport vehicle. Collectively, the sport objects such as the ski boot and the variety of sport vehicles are denoted as "sport implements". Accordingly, when the sensing unit is not "stand alone", the housing which integrates the controller subsystem with one or more sensors and battery can be made from the material of the associated sport implement, in whole or in part, such that the sensing unit becomes integral with the sport implement. The universal interface is therefore not desired in this aspect.

In one preferred aspect, the sensing unit provides for the measurement of power entirely within a watch. Manufacturers such as CASIO™, TIMEX™, SEIKO™, FILA™, and SWATCH™ make sport wrist-watches with certain digital electronics disposed therein. In accord with the invention, power measurement capability is added within such a watch so that "power" data can be provided to sport enthusiasts in all sports, e.g., volleyball, soccer, football, karate, and similar common sports.

In one preferred aspect, the performance data is transmitted via radiofrequencies (or other data transfer technique, including infrared light or inductively-coupled electronics) from the sensing unit to a data unit which is ergonomically compatible with the user. Accordingly, the sensing unit in this aspect does not require a display as performance data is made available to the user through the data unit. For example, the data unit of one aspect is a watch that the user wears on her wrist. The data unit can alternatively be made into a "pager-like" module such as known fully in the art (MOTOROLA™ is one well-known manufacturer that makes pager modules). In either case, the sensing unit and the data unit cooperate to provide a complete system for the user.

The data unit can take other forms, in other aspects. For example, the performance data can be transmitted directly to a radio receiver connected to headphones worn by the user or to a small speaker worn in the user's ear. The radio receiver is for example similar to the SONY® WALKMAN®, used by plenty of sports enthusiasts. In accord with this aspect of the invention, the sensing unit transmits performance data directly into the receiver so that the user can listen—in real time—to the results of his sports performance. Specifically, the radio receiver includes a data conversion unit which responds to the receipt of performance data from the sensing unit and which converts the performance data into sound, via the headphones, so that the user listens to the performance data. After a jump, for example, the data conversion unit transmits airtime and drop distance data to the user so that the user hears "1.8 seconds of air, 5 feet drop distance".

The data unit can also be made into the pole of a skier, such that a display at the end of the pole provides performance data to the user.

In still another aspect, the data unit is not required. Rather, performance data is transmitted such as by RF directly from the sensing unit to a base station associated with the sporting area. For example, the base station can be a computer in the lodge of a ski area. The sensing unit of this aspect transmits performance data tagged to a particular user to the base station where performance data from all users is collated, stored, compared and/or printed for various purposes. Preferably, the base station includes processing capability and storage whereby performance data can be assessed and processed. For example, a user at the end of the day can receive a print-out (or computer disk) of his performance data; and the report can include a comparison to other performers within the sporting activity. If the activity is snowboarding, for example, the user can see his performance data as compared to other snowboarders on a particular mountain. Performance data can also be catalogued according to age, date, and performance data type (e.g., airtime, power, speed and/or drop distance).

In one aspect, the base station augments the sensing units by providing processing power to calculate and quantify the performance data. For example, in this aspect, raw sensor data such as from a microphone is transmitted from the sensing unit to the base station, which thereafter calculates the appropriate performance data. The sensing unit "tags" the transmitted data so as to identify a particular user. The base station of this aspect then calculates and stores the appropriate performance data for that particular user.

The base station can further include a Web Site server that connects the base station to other such base stations via the Internet so that performance data from users can be collated, stored, compared and/or printed for a variety of purposes. One or more servers thus function as the primary servers from which users can obtain their performance data from their own computers, via the Internet (or via a LAN or WAN). In one aspect, the primary servers also function as a gaming network where performance data from all users is integrated in a recreational manner, and made available to all or selected users.

In one aspect, sensing units (or sensing units and data units) are rented by the owners of a particular sporting area (e.g., a ski area) such as in connection with the rental of a snowboard, or even as a stand-alone device that mounts to the user's board. The sensing unit can provide real-time performance data to the user, via a connected display or via a data unit. Alternatively, the sensing unit transmits data to the rental facility (or to the base station connected via a LAN to the rental facility) so that the user retrieves his or her performance data at the end of the day.

In one aspect of the invention, performance data is sensed through one or more sensors connected with the sensing unit. It is not desirable to provide all performance data for all sporting activities. For example, for white water rafting or kayaking, a "power sensing unit" is useful—to quantify the roughness of the ride—but airtime data is practically useless since typically such vehicles do not catch air. In addition, for any given system (i.e., sensing units or sensing units and data units combined), more sensors add cost and require added processing capability, requiring more power draw and reducing battery lifetime. Therefore, certain aspects of the invention provide sensing units that provide only that portion of the performance data that is useful and/or desirable for a given sporting function, such as the following sensing units:

Airtime Sensing Unit

One sensing unit of the invention measures "air" time, i.e. the time a person such as a snowboarder or skier is off the ground during a jump. This airtime sensing unit is preferably battery-powered and includes a microprocessor (or microcontoller). The airtime sensing unit either connects to a data unit; or can include a low-powered liquid crystal display (LCD) to communicate the "air" time to the user. The components for this airtime sensing unit can include one or more microphones or accelerometers to detect vibration (i.e., caused by friction and scraping along the ground) of the user's vehicle along the ground, so that "airtime" is measured when an appropriate absence of vibration is detected. Preferably, the electronics for the airtime sensing unit are conveniently packaged within a single integrated circuit such as an ASIC. A digital memory stores airtime data; or alternatively, the airtime sensing unit transmits airtime performance data to a data unit or to a base station.

The airtime sensing unit preferably provides several facets of airtime performance data, such as any of the following information data and features:

(1) Total and peak air time for the day. In this aspect, the airtime sensing unit provides at least the peak airtime for the day. The sensing unit can also integrate all airtimes for the day to provide a total airtime.

(2) Total dead time for the day. In this aspect, the airtime sensing unit includes an internal clock that also integrates the time for which no sporting activity is made such as over a given day. For example, dead time can include that time within which the user is at the bar, rather than skiing.

(3) Air time for any particular jump. As discussed above, briefly, this aspect of the airtime sensing unit provides substantially real-time data to the user such as the amount of airtime for a recent jump. By way of example, a data unit with headphones, in one aspect, provide this data to the user immediately after the jump. Alternatively, the airtime data for the jump is stored within memory (either within the data unit or in the sensing unit) so that the user can retrieve the data at his convenience. For example, data for a particular jump can be retrieved from a watch data unit on the chairlift after a particular run which included at least one jump. In this manner, the user can have substantially real-time feedback for the airtime event.

(4) Successive jump records of air time. In this aspect, jump records over a selected period (e.g., one day) are stored in memory either in the data unit or in the airtime sensing unit. These airtime "records" are retrieved from the memory at the user's convenience. The system can also store such records until the memory is full, at which time

the oldest record is over-written to provide room for newer airtime data. The data can also be transmitted to a base station which includes its own memory storage for retrieval by the user.

(5) Averages and totals, selectable by the user. In this aspect, the sensing unit or data unit (or the base station) saves airtime data within memory for later retrieval by the user. The period for which the data is valid is preferably selectable by the user. The data of this aspect includes airtime averages, over that period, or airtime totals, corresponding to the summation of those airtimes over that period.

(6) Rankings of records. In this aspect, the sensing unit or data unit (or base station) saves airtime data within memory for later retrieval by the user. For example, the user obtains airtime data through the data unit while on the chairlift or later obtains the data in print-out form at the base station, or a combination of the two. The period for which the data is valid is preferably selectable by the user. The data of this aspect includes airtime records, over that period, and the airtime records are preferably ranked by airtime size, the biggest "air" to the smallest.

(7) Logic to reject activities which represents false "air" time. As discussed above, the preferred airtime sensing unit includes logic circuitry to reject false data, such as standing in line. Typically, the logic sets outer time limits on acceptable data, such as one half second to five seconds for snowboarding, one quarter second to three seconds for roller-blading, and user selected limits, targeted to a particular user's interest or activity. The logic circuitry of the airtime sensing unit preferably also works with a speed sensor, as discussed herein; and the logic operates to measure airtime only when the sensing unit is moving above a minimum speed. For example, when the sensing unit includes an airtime sensor and a speed sensor, the logic ensures that airtime data is measured only if there is motion. Such logic then ensures that false data corresponding to standing in line is not recorded as performance data. The speed limits tied to the logic are preferably selectable by the user; though certain default speeds are set for certain activities. For example, for skiing and snowboarding, 5 mph is a reasonable lower speed limit, such that all airtime, drop distance and/or power measurements are ignored at lower speeds. For roller-blading, the lower limit of speed is reasonably 1mph, as for wind-surfing.

(8) Toggle to other device functionality. Although this section describes an airtime sensing unit, many sensing units of the invention incorporate at least two sensors, such as: airtime sensor and speed sensor: airtime sensor and power sensor; airtime sensor and drop distance sensor; a combination of airtime, power, and drop distance sensors; a combination of airtime, drop distance and speed sensors; a combination of airtime, power and speed sensors; and a full sensing unit of airtime, speed, power and drop distance sensors. Accordingly, a toggle button is usually included with the sensing unit (or alternatively with the data unit) such that the user can toggle to data corresponding to the desired performance data. Similar toggle buttons can be included with the sensing unit or data unit (which transmits data to the sensing unit) to activate only certain portions of the sensing unit, e.g., to turn off speed sensing. Alternatively, data from any given sensor can be acquired according to user-specified requirements.

Those skilled in the art should appreciate that a sensing unit with multiple sensors can simply acquire all the data, and that the data is sorted according to user needs and requests by toggle functionality at the data unit or at the base station (i.e., such as entering a request for the desired information at the computer keyboard).

(9) User interface to control parameters. As discussed above, the sensing unit and/or data unit preferably include buttons or toggle switches for the user to interact with the unit. For example, one of the units should include an ON/OFF switch, and at least one button to command the display of performance data.

In other aspects, the airtime data of above paragraphs (1)–(6) can be shown on a display connected with the sensing unit, or they can be transmitted to an associated data unit, or to a base station.

Speed Sensing Unit

One sensing unit of the invention measures "speed." This speed sensing unit is preferably battery-powered and includes a microprocessor (or microcontoller). The speed sensing unit either connects to a data unit; or can include a low-powered liquid crystal display (LCD) to communicate the "speed" to the user. Certain sporting activities also benefit by the measurement of speed, including skiing, snowboarding, mountain biking, wind-surfing, roller-blading, and others. To detect user motion, the sensing unit includes a speed sensor such as a Doppler module, as described in U.S. Pat. Nos. 5,636,146, 4,722,222, and 4,757,714, incorporated herein by reference. Alternatively, the speed sensor can include a microphone subsystem that detects and bins (as a function of frequency) certain sound spectra; and this data is correlated to known speed frequency data. A speed sensor can also include a microphone which, when coupled with the controller subsystem, detects a "pitch" of the vehicle; and that pitch is used to determine speed to a defined accuracy (typically at least 5 mph). The speed sensor can alternatively include a Faraday effect sensor (which interacts a magnetic field with an electric field to create a voltage proportional to speed). Specifically, the Faraday effect sensor sets up a current that runs orthogonal to the speed direction. In one aspect, the current is created between two electrodes formed by the two metal edges of a ski or snowboard (in circuit with the snow). When the Faraday effect sensor moves, a voltage is created proportional to velocity. The magnetic field is formed by a magnet that creates a flux substantially perpendicular to the current flow (those skilled in the art should appreciate that the orthogonality of the respective quantities can be compensated by a sine function if the quantities are not orthogonal, to retrieve the speed data).

In another aspect, a sensing unit with a microphone, for example, can benefit by using an electrical filter with a variable bandpass that tracks the dominant spectral content, denoted herein as a "tracking filter."

This speed sensing unit can be stand-alone, or a speed sensor can be integrated into a sensing unit with multiple sensors, such as described above. For example, one speed sensing unit provides both "air" time and speed to the user of the device.

Preferably, the electronics for the speed sensing unit are conveniently packaged within a single integrated circuit such as an ASIC. A digital memory stores speed data; or alternatively, the speed sensing unit transmits speed performance data to a data unit or to the base station.

The speed sensing unit preferably provides several facets of speed performance data, such as any of the following information data and features:

(1) Average and peak speed for the day. In this aspect, the speed sensing unit provides at least the peak speed for the

day. The sensing unit can also integrate all speeds for the day to provide an average speed.

(2) Speed for any particular period or run. This aspect of the speed sensing unit provides substantially real-time data to the user such as the speed reached in a recent run. By way of example, a data unit with headphones can provide this data immediately (e.g., continually informing the user of data such as "25 mph" or "15 mph"). Alternatively, the speed data for the run or period is stored within memory (either within the data unit or in the sensing unit) so that the user can retrieve the data at his convenience. For example, data for a particular run or period can be retrieved from a watch data unit on the chairlift after a particular run. In this manner, the user can have substantially real-time feedback for recent periods.

(3) Successive records of speed. In this aspect, peak or average speed records over a selected period (e.g., one day) are stored in memory either in the data unit or in the speed sensing unit. These speed "records" are retrieved from the memory at the user's convenience. The system can also store such records until the memory is full, at which time the oldest record is over-written to provide room for newer speed data. The data can also be transmitted to a base station which includes its own memory storage for retrieval by the user.

(4) Averages and totals, selectable by the user. In this aspect, the sensing unit or data unit (or the base station) saves speed data within memory for later retrieval by the user. The period for which the data is valid is preferably selectable by the user. The data of this aspect preferably includes speed averages over that period.

(5) Rankings of records. In this aspect, the sensing unit or data unit (or base station) saves speed data within memory for later retrieval by the user. For example, the user obtains speed data through the data unit while on the chairlift or later obtains the data in print-out form at the base station, or a combination of the two. The period for which the data is valid is preferably selectable by the user. One record can include peak and/or average speed, over that period. The records are preferably ranked by velocity, the fastest to the slowest speeds.

(6) Logic to reject data representing contaminated speed data. The preferred speed sensing unit includes logic circuitry to reject false data, such as data corresponding to two hundred miles per hour. Typically, therefore, the logic sets outer speed limits on acceptable data, such as seventy miles per hour for a skier, as an upper limit, to one or five miles per hour as a lower limit (data that is slower than this rate is not, generally, of interest to skiers). Other reasonable limits are 70 mph to 5 mph for snowboarding, and 40 mph to 5 mph for roller-blading. User selected limits can also be used within the speed sensing unit and targeted to a particular user's interest or activity.

(7) Toggle to other device functionality. Although this section describes a speed sensing unit, many sensing units of the invention incorporate at least two sensors, such as: speed sensor and power sensor; speed sensor and drop distance sensor; and a combination of speed, power, and drop distance sensors. Accordingly, a toggle button is usually included with the speed sensing unit (or alternatively with the data unit) such that the user can toggle to data corresponding to the desired performance data. Similar toggle buttons can be included with the sensing unit or data unit (which transmits data to the sensing unit) to activate only certain portions of the sensing unit, e.g., to turn off airtime or drop distance sensing. Alternatively, data from any given sensor can be acquired according to user-specified requirements.

(8) User interface to control parameters. As discussed above, the speed sensing unit and/or data unit preferably include buttons or toggle switches for the user to interact with the unit. For example, one of the units should include an ON/OFF switch, and at least one button to command the display of performance data.

In one aspect, a sensing unit with multiple sensors simply acquires all the data, and that data is sorted according to user needs and requests by toggle functionality at the data unit or at the base station (i.e., such as entering a request for the desired information at the computer keyboard).

Power Sensing Unit

One sensing unit of the invention measures "power", a measure of the amount of energy absorbed or experienced by a user during a period such as a day. The power sensing unit thus provides a measure of the intensity or how "hard" the user played during a particular activity. The components for this power distance sensing unit can include one or more microphones or accelerometers to sense vibration or "jerk" of the user or the user's vehicle relative to the ground. For example, one power sensing'unit provides a kayaker with the ability to assess and quantify the power or forces experienced during a white-water ride. The power sensing unit is preferably battery-powered and includes a microprocessor (or microcontoller). In one aspect, "power" is measured through an accelerometer. In another aspect, the power sensor includes a microphone, as discussed below. As before, the power sensing unit is stand-alone, or it can be incorporated with other units discussed herein. Preferably, the electronics for the power sensing unit are conveniently packaged within a single integrated circuit such as an ASIC. A digital memory stores power data; or alternatively, the power sensing unit transmits power performance data to a data unit. One power sensor according to the invention is an accelerometer, oriented in the direction most indicative of expended energy (e.g., for skiing, the accelerometer is preferably oriented perpendicular to the ski surface). Another power sensor is a microphone, preferably mounted within an enclosure which generates sound in response to user activity.

The power sensing unit preferably provides several facets of power performance data, such as any of the following information data and features:

(1) Peak and average power for the day. In one aspect, a power sensor is an accelerometer which generates analog data that is digitally sampled by the controller subsystem at a rate such as 1000 Hz, 100 Hz or 10 Hz. This digitally sampled data is integrated over a "power period" such as one-half second, one second, five seconds, ten seconds, fifteen seconds, twenty seconds, thirty seconds, one minute, or five minutes (depending on the sporting activity)—to specify a power "value". In another aspect, a peak power is determined for power values over a given user-selected period, e.g., one minute, one day, or other user-selected period, and stored within memory (in the sensing unit, in the data unit, and/or in the base station) for subsequent retrieval by the user. The power sensing unit can also provide an average power value over that period. By way of example, for snowboarding, a user might experience very high power activity over a period of fifteen seconds, such as within a mogul run. By determining power values over one second intervals (i.e., the "power period"), the mogul run power activity will clearly stand out as a power event in subsequent data analysis. The power period can be user selected, such as over a run down a slope on a mountain. For example, snowboarders over a run down a slope can integrate

power values over that period to determine a total value, which can be compared amongst users. Alternatively, the integrated value can be divided by the total number of samples to determine an average power over that run.

(2) Successive power records. In this aspect, peak power records are stored in memory either in the data unit or in the power sensing unit. These power "records" are retrieved from the memory at the user's convenience. The system can also store such records until the memory is full, at which time the oldest record is over-written to provide room for newer power data. The data can also be transmitted to a base station which includes its own memory storage for retrieval by the user.

(3) Rankings of records. In this aspect, the power sensing unit or data unit (or base station) saves power data within memory for later retrieval by the user. For example, the user obtains power data through the data unit while on the chair-lift or later obtains the data in print-out form at the base station, or a combination of the two. The period for which the data is valid is preferably selectable by the user. The data of this aspect includes power records, over that period, and the power records are preferably ranked by the largest to the smallest.

(4) Logic to ignore data that contaminates power data. By way of example, data from sensors such as accelerometers can provide noise spikes that correspond to unreasonable power values; and the logic operates to delete such noise spikes.

(5) Toggle to other device functionality. Although this section describes a power sensing unit, many sensing units of the invention incorporate at least two sensors, such as a power sensor and drop distance sensor. Accordingly, a toggle button is usually included with the sensing unit (or alternatively with the data unit) such that the user can toggle to data corresponding to the desired performance data. Similar toggle buttons can be included with the sensing unit or data unit (which transmits data to the sensing unit) to activate only certain portions of the sensing unit, e.g., to turn off drop distance sensing. Alternatively, data from any given sensor can be acquired according to user-specified requirements.

(6) User interface to control parameters. As discussed above, the sensing unit and/or data unit preferably include buttons or toggle switches for the user to interact with the unit. For example, a sensing unit of one aspect includes an-ON/OFF switch and at least one button to command the display of performance data. Since power can be scaled to correspond to real data, such as "g's" or "joules", one button can be used to change the units of the power values.

Drop Distance Sensing Unit

One sensing unit of the invention measures "drop distance". This drop distance sensing unit is preferably battery-powered and includes a microprocessor (or microcontoller). The drop distance sensing unit either connects to a data unit; or can include a low-powered liquid crystal display (LCD) to communicate the "drop distance" to the user. The components for a drop distance sensing unit of one aspect includes a pressure sensor or altimeter. Preferably, the electronics for the drop distance sensing unit are conveniently packaged within a single integrated circuit such as an ASIC. A digital memory unit stores drop distance data; or alternatively, the drop distance sensing unit transmits drop distance performance data to a data unit.

The drop distance sensing unit preferably provides several facets of drop distance performance data, such as any of the following information data and features:

(1) Total and peak drop distance for the day. In this aspect, the drop distance sensing unit provides at least the peak drop distance for the day. The sensing unit can also integrate all drop distances for the day to provide a total drop distance.

(2) Drop distance for any particular jump. This aspect of the drop distance sensing unit provides substantially real-time data to the user such as the drop distance for a recent jump. By way of example, in one aspect, a data unit with headphones provides this data immediately after the jump. Alternatively, the drop distance data for the jump is stored within memory (either within the data unit or in the sensing unit) so that the user can retrieve the data at his convenience. For example, data for a particular jump can be retrieved from a watch data unit on the chairlift after a particular run which included at least one jump. In this manner, the user can have substantially real-time feedback for the drop distance event.

(3) Successive jump records of drop distance. In this aspect, jump records over a selected period (e.g., one day) are stored in memory either in the data unit or in the drop distance sensing unit (or at the base station). These drop distance "records" are retrieved from the memory at the user's convenience. The system can also store such records until the memory is full, at which time the oldest record is over-written to provide room for newer drop distance data. The data can also be transmitted to a base station which includes its own memory storage for retrieval by the user.

(4) Averages and totals, selectable by the user. In this aspect, the sensing unit or data unit (or the base station) saves drop distance data within memory for later retrieval by the user. The period for which the data is valid is preferably selectable by the user. The data of this aspect includes drop distance averages, over that period, or drop distance time totals, corresponding to the summation of those drop distances over that period.

(5) Rankings of records. In this aspect, the sensing unit or data unit (or base station) saves drop distance data within memory for later retrieval by the user. For example, the user obtains drop distance data through the data unit while on the chair-lift or later obtains the data in print-out form at the base station, or a combination of the two. The period for which the data is valid is preferably selectable by the user. The data of this aspect includes drop distance records, over that period, and the drop distance records are preferably ranked by size, the largest distance to the smallest.

(6) Logic to reject activities which represents false drop distance. The preferred drop distance sensing unit includes logic circuitry to reject false data. Typically, the logic sets outer drop distance limits on acceptable data, such as three feet to one hundred feet for snowboarding and skiing (or up to 150 feet for extreme sports), and user selected limits, targeted to a particular user's interest. The logic circuitry of the drop distance sensing unit preferably also works with an airtime sensor, as discussed above; and the logic operates to measure drop distance only when there is a detected airtime. For example, when the sensing unit includes an airtime sensor and a drop distance sensor, the logic ensures that drop distance data is measured only if there is an airtime event, which can include its own logic as discussed above. The limits for other sports varies. In roller-blading, for example, the drop distance limits can be set to one foot minimum to ten or fifteen feet maximum.

(7) Toggle to other device functionality. Although this section describes a drop distance sensing unit, many

sensing units of the invention incorporate at least two sensors, such as: drop distance sensor and speed sensor; drop distance sensor and power sensor; drop distance sensor and airtime sensor; and combinations. Accordingly, a toggle button is usually included with the sensing unit (or alternatively with the data unit) such that the user can toggle to data corresponding to the desired performance data. Similar toggle buttons can be included with the sensing unit or data unit (which transmits data to the sensing unit) to activate only certain portions of the sensing unit, e.g., to turn off speed sensing. Alternatively, data from any given sensor can be acquired according to user-specified requirements.

(8) User interface to control parameters. As discussed above, the sensing unit and/or data unit preferably include buttons or toggle switches for the user to interact with the unit. For example, the sensing unit of one aspect includes an ON/OFF switch, and at least one button to command the display of performance data such as drop distance.

In one aspect, the invention incorporates a pair of power meters that measure and quantify a competitor's performance during mogul competitions. In this application, one device is mounted to the ski (or lower body, such as the lower leg), and another to the upper body. An RF signal unit communicates readings from both devices to a signal controller at the judge's table. The combined signals determine the force differential between the lower legs and the upper body, giving an actual assessment of a competitor's performance. The device starts transmitting data at the starting gate. The device of this aspect can also be coupled to the user via a data unit with headphones to provide a hum or pitch which tells the user how effective his/her approach is.

In another aspect, the invention provides a performance system which gauges the negative airtime aspects of speed skiers. For example, it is undesirable for skiers such as Tommy Moe to lift off of the ground during training, and certainly during a speed event, which slows the skier's speed. In this aspect, the system informs the user (in real time, via a data unit) of instances of air time so that the skier can adjust and improve his competitive position. Airtime in this aspect is thus typically less than three seconds and can be as small as one tenth of a second or less. The data is preferably also communicated to a base station so that the data can be replayed together with a video of the run, so that the skier can get feedback of airtime (unwanted in speed skiing) while watching his technique.

In another aspect, the invention provides a speed and airtime sensing unit such as described above, and additionally provides a height sensor integrated with the sensing unit. In one aspect—identified herein as the "default" height measure—the height sensor detects speed and converts that speed data to height. Many jumps performed in sporting events such as snowboarding occur off of a ledge, such that "height" is determined solely by the force of gravity. In one aspect, therefore, drop distance height is determined by ½ at^2, where a is the acceleration due to gravity (9.81 meters per second squared, at sea level) and where t is airtime, as determined by an airtime sensor as described herein. By way of example, for a one second airtime, a drop distance of 4.9 meters is measured. This result is approximately true even if the airtime occurs on a slope down a mountain. However, this calculation will be in error if there is an upward or downward motion at the start of the airtime. For example, if a jump occurs off of a mogul and the user is launching upwards into the air, then this calculation will produce an incorrect number. Accordingly, the height sensor preferably includes a level sensor which senses and measures the angle of motion relative to a plane perpendicular to the force of gravity. This angle determines the distance which should be added or subtracted from the default measure. By way of example, if at the beginning of a two second airtime the user moves at a speed of 10 mph (about 4.47 m/s), at an angle of 15 degrees upwards (such as off a mogul), then the velocity vector in the vertical direction, V_v, is sin(15°)*10 mph; and the distance added to the default measure is approximately $\sin(15°)*2(V_v^2)/a$, or 1.05 m. The time for this upward-traveled distance is $\sin(15°)*2V_v/a$, or 0.24s. The default time in this example is thus total airtime—0.24s; and the default measure is 15.2 m. The total drop distance is then 15.2 m plus 1.05 m, or 16.25 m.

In one aspect, the invention provides a system for determining the loft time of a moving vehicle off of a surface. A loft sensor senses a first condition that is indicative of the vehicle leaving the surface, and further senses a second condition indicative of the vehicle returning to the surface. A controller subsystem, e.g., typically including a microprocessor or microcontroller, determines a loft time that is based upon the first and second conditions, and the loft time is preferably displayed to a user of the system by a display, e.g., a LCD or LED display. In another aspect, a power module such as a battery is included in the system to power the several components. In addition, a housing preferably connects and protects the controller subsystem and the user interface; and further includes an interface (possibly including velcro) that facilitates attaching the housing to the vehicle.

One preferred aspect of the invention includes a speed sensor, connected to the controller subsystem, which senses a third condition that is indicative of a velocity of the vehicle (or at least indicates that the vehicle is in forward motion). In this aspect, the controller subsystem includes means for converting the third condition to information representative of a speed of the vehicle. Alternatively, the speed sensor is used as logic for the airtime sensor to switch off the collection of data when there is no forward motion. According to one aspect, the system provides a user with airtime and speed of the vehicle.

In yet another aspect, a display of the invention displays selective information, including one or more of the following: the loft time; a speed of the vehicle; a peak loft time; an average loft time; a total loft time; a dead time; a real activity time; an average speed; successive records of loft information; successive records of speed information; a distance traveled by the vehicle; and a height achieved by the vehicle off of the surface.

In still another aspect, the invention includes a user interface for providing external inputs to the sensing and/or data units, including one or more of the following: a start/stop button for selectively starting and stopping the acquisition of data; a display-operate button for activating the display selectively; a speed/loft/power/drop distance toggle button for alternatively commanding a display of different performance data; means for commanding a display of successive records of performance data selectively; means for commanding a display of information corresponding to average performance data; means for commanding a display of dead time; means for commanding a display of distance traveled by the vehicle upon which the user rides; means for commanding a display of height achieved by the vehicle off of the surface; and means for commanding a display of real activity time.

Preferably, the controller subsystem of the invention includes a clock element, e.g., a 24-hour clock, for providing information convertible to an elapsed time. Accordingly, the

subsystem can perform various calculations, e.g., dead time, on the data acquired for display to a user. The clock can also be incorporated into a data unit, as a matter of design choice.

In another aspect, the airtime sensor is constructed with one of the following technologies: (i) an accelerometer that senses a vibrational spectrum; (ii) a microphone that senses a noise spectrum; (iii) a switch that is responsive to a weight of a user of the vehicle; (iv) a voltage-resistance sensor that generates a voltage indicative of a speed of the vehicle; and (v) a plurality of accelerometers connected for evaluating a speed of the vehicle.

In another aspect, induced-strain sensors, such as a piezoceramics (e.g., PZT, or lead zirconate), piezopolymer (e.g., PVDF), or shape memory (e.g., NiTiNOL) elements can be used in sensors discussed herein. An "induced strain" sensor provides a measurable output such as a voltage in response to an applied strain, generally a compressive strain. Also, strain gages and load cells (which are usually made using strain gage bridges) can also be incorporated into sensors herein: the former for measuring bending strains, the latter for forces and compressive strains. In still another aspect, FSRs (force sensing resistors), such as those manufactured by IEE Interlink, can be used. The FSRs are pads consisting of inter-digitated electrodes over a semi-conductive polymer ink, wherein the resistance between the electrodes decreases nonlinearly as a function of applied compressive load, with high sensitivity and low cost.

In a preferred aspect, the airtime sensor of the invention senses a spectrum of information, e.g., a vibrational or sound spectrum, and the controller subsystem determines the first and second conditions relative to a change in the spectrum of information. Further, the controller subsystem interprets the change in the spectrum to determine the loft time.

For example, one aspect of an airtime sensor according to the invention includes one or more accelerometers that generate a vibrational spectrum of the vehicle. In such an aspect, the first and second conditions correspond to a change in the vibrational spectrum. By way of another example, one airtime sensor of the invention includes a microphone subassembly that generates voltages corresponding to a noise spectrum of the vehicle; and, in this aspect, the first and second conditions correspond to a change in the detected noise spectrum. Because these spectrums are influenced by the particular activity of a user, e.g., standing in a ski line, a controller subsystem of the invention preferably includes logic for assessing boundary conditions of the spectrum and for excluding certain conditions from the determination of airtime. Accordingly, if a skier is in a lift line, such conditions are effectively ignored. One boundary condition, therefore, according to an aspect of the invention, includes an elapsed time between the first condition and the second condition that is less than approximately 500 ms; such that events that are within this boundary condition are excluded from the determination of airtime. One other boundary condition, in another aspect, includes an elapsed time between the first condition and the second condition that is greater than approximately five seconds; such that events that are outside this boundary condition are excluded from the determination of airtime. Because these boundary conditions are important in the aspects of the invention which utilize a spectrum of information, the sensing and/or data units preferably utilize a user interface to provide selective external inputs to the controller subsystem and for adjusting the boundary conditions selectively.

In one aspect, the change in a vibration or sound spectrum is detected through waveform "enveloping" of the time domain signal, and then by passing the output of this envelop to a threshold-measuring circuit. Pre-filtering of the signal, especially to remove low-frequency content beyond high pass filtering, can also be included.

In still another aspect, the controller subsystem determines a pitch of the spectrum by isolating a best-fit sine wave to a primary frequency of at least part of the spectrum and by correlating the pitch to a vehicle speed. Accordingly, the invention of this aspect detects spectrum information and correlates that information to a speed of the vehicle. Typically, a higher pitch frequency corresponds to a higher vehicle speed and a lower pitch frequency corresponds to a lower vehicle speed. However, in another aspect, the selected pitch frequency is calibrated relative to a selected vehicle and speed.

In still another aspect, speed is inferred by the amount of energy at different vibrational frequencies, as discussed herein.

The invention also provides, in another aspect, means for storing information including look-up tables with pitch-to-speed conversions for a plurality of vehicles. This is useful because different vehicles have different associated noise and/or sound spectrums associated with the vehicle. Accordingly, the invention in this aspect includes memory for storing the respective calibration information of the different vehicles (typically in a look-up table format) so that a user can utilize the invention on different vehicles and still accurately determine speed. Specifically, a particular pitch is associated with a particular speed for a particular vehicle; and that association is selectively made by the user.

In several aspects of the invention, the controller subsystem includes one or more of the following: means for selectively starting and stopping the acquisition of data by the sensing unit; means for responding to an external request to activate a display for the display of performance data; means for responding to an external request to alternatively display airtime, drop distance, speed and/or power; and/or means for responding to an external request to display successive records of performance data.

The invention also provides certain methodologies. For example, in one aspect, the invention provides a method for determining the loft time of a moving vehicle off of a surface, comprising the steps of: (1) sensing the vehicle leaving the surface at a first time; (2) sensing the vehicle returning to the surface at a second time; and (3) determining a loft time from the first and second times. Preferably, the loft time is provided to the user who performed the jump via one of the following methods: through a display located with the user, either in a data unit or within a sensing unit; through a real time feedback heads-up display or headphones; through a report available at a base station located at the area where the jump occurred, such as after a day of skiing; and/or through a computer linked to a network like the Internet, where the airtime data is stored on a server on the network, such as a server located at the area where the jump occurred.

In still another aspect, the invention provides a method of measuring the amount of "power" a user absorbs during the day. A motion sensor, e.g., a microphone or accelerometer, attaches to the vehicle, preferably pointing perpendicular to the top of the vehicle (e.g., perpendicular to the top surface of the snowboard) so that a measure of acceleration, "force", jerk or jar associated with the user is made. The data from the motion sensor is integrated over a selected time—e.g., over the time of the skiing day, or over power periods such as one minute intervals—so that an integrated measure of motion is acquired. By way of example, if the motion sensor

is an accelerometer positioned with a sensitive axis arranged perpendicular to the top snowboard surface, then, through integration over the power period, an integrated measure of "power" is obtained.

Those skilled in the art should appreciate that power can be converted to actual power or similar units—e.g., watts or joules or ergs or Newtons—though real units are not as important as having a constant, calibrated measure of "power" for each user. That is, suppose two snowboarders have power sensors on their respective snowboards. If one person skis a green slope and another skis a double-diamond, then the integrated value out of the double-diamond snowboarder will be greater. The units are therefore set to a reasonably useful value, e.g., generic power "UNITS". In one aspect, the power units are set such that a value of "100" indicates a typical snowboarder who skies eight hours per day and on maximum difficult terrain. At the same time, a snowboarder who rides nothing but green beginner slopes, all day, achieves something far less, e.g., a value of "1". In this manner, average skiers on blue, intermediate slops will achieve intermediate values, e.g., "20" to "50". Other scales and units are of course within the scope of the invention, and should be set to the particular activity.

Units for airtime are preferably set to seconds, such as "1.2s". Units for speed are preferably set to miles per hour, killometers per hour, meters per second, feet per second, inches per second, or centimeters per second. Units for drop distance are preferably set to feet, meters, inches, or centimeters.

In one aspect, the sensing unit (and/or the data unit) has a user interface. The interface can include a display and/or audible feedback such as through headphones In one aspect, the audible feedback informs the user of big "air" words such as "awesome" if for example a snowboarder hit really big air (e.g., over five seconds). In another aspect, the interface electronics include a low-power piezo "buzzer" or headphone "bud" speaker that sounds whenever an "air" condition is sensed. This provides immediate feedback to the user. Further, in another aspect a varying pitch is used to give a speed indication. For instance, the ear can readily distinguish an octave pitch change, which can for example correspond to each 5 mph change in speed.

The measure of power according to the invention thus provides significant usefulness in comparing how strenuous one user's activity is as compared to another. For example, suppose two users ski only blue, intermediate slopes with the exact same skill and aggressiveness except that one user chooses to sit in the bar for three hours having a couple of cocktails. At the end of an eight hour day—providing the power period is set for the whole day—the skier who skied all eight hours will have a power measurement that is 8/5 that of his cocktail-drinking companion. They can thereafter quantitatively talk about how easy or how difficult their ski day was. As for another example, suppose a third friend skis only double-diamond slopes and he takes four hours out to drink beer. At the end of the day, his power measure may still be greater than his friends depending upon how hard he skied during his active time. He could therefore boast—with quantitative power data to back him up—that he had more exercise than either of his friends even though he was drinking half the day.

In one aspect, the invention incorporates a breathalyzer—used to measure a user's consumption (i.e., a blood alcohol level)—and the level is stored such as within the memory within the controller subsystem. A base station can upload the data to the memory, as desired.

The measure of air time, according to the invention, can also be used in a negative sense. That is, speed skiers try to maintain contact with the ground as air time decreases their speed. By monitoring their air time with the invention, they are better able to assess their maneuvers through certain terrain so as to better maintain ground contact, thereby increasing their speed.

The measurement of air, speed and power, and drop distance, in accord with the invention, are preferably made through one or more sensors located with the vehicle, e.g., on the snowboard or ski, upon which the person rides. As such, it is difficult to see the sensor; so one aspect the invention provides an RF transmitter in the sensing unit. A data unit coupled to the RF transmitter—e.g., in the form of a watch, paging unit, or radio receiver with headphones, is located at a convenient location with the person. The performance data—e.g., air, power, drop distance and speed—is transmitted to the person for convenient viewing, or listening. In still other aspects, a memory element in the data unit (or alternatively in the sensing unit) provides for storing selected parameters such as successive records of speed, air, drop distance and power, or averages for the performance data. Data can also be transmitted from the sensing unit to a base station, as discussed above. Those skilled in the art should appreciate that other data transfer techniques can be used instead of RF, including IR data transfer between the units.

In one aspect, the sensing unit internally resets (i.e., shuts off) when the unit senses no reasonable or useful performance data for a preselected period of time. By way of example, through a clock within the microprocessor, the unit automatic time-outs after that period, saving battery power.

In one aspect, a temperature sensor is included with the sensing unit (or data unit). A temperature profile is taken over the course of a activity day and is later displayed so that the user may boast that he or she skied in the most arduous situations.

Preferably, performance data is accumulated and then transmitted to a base station such as a ski lodge. For mountain biking, data can be telemetered back to a club house. Through the use of Internet connectivity, these data sets can also be downloaded off a Web site so that the user can compare different slopes or areas, together with performance. The data can also be evaluated and figures of merit can be applied to each run so that a skier can look at his or her performance and see how they did relative to other users. A skier may find for example that he skied better on that trail than any one else all month, year or ever. A handicap can also be applied to other mountains and trails so that a national or world competition is achieved. This interconnectivity is permitted by use of the World Wide Web or simply by using bulletin boards that are called up and updated, as known in the art. Telenet or FTP sites can also contact each other or be contacted by a home site that will assimilate the data and prepare it for display. Security could be ensured so that a user has confidence that only he or she can access their own data.

The invention thus provides, in one aspect, a national or regional game to be played so that the many users can compare and store performance data. Ski areas may use this data, for example, with the participant's knowledge and consent so that it will lure skiers to their lifts in the hope that they will win an award. Awards for the highest vertical drop, most air time, greatest speed or most power may also be awarded. The prizes could simply be free lift tickets.

In one aspect, power for the sensing units (or data units) may be saved during times of inactivity by powering off most of the electronics with a solid state switch such as a MOSFET. The processor or some minimum electronics can

remain powered so that when activity is detected, the remaining electronics are powered as needed. Further, to save power, sensors such as accelerometers are duty cycled.

In another aspect, downward velocity is determined by knowing the rate of descent such as through a pressure sensor. Pressure sensing and airtime can thus be used to determine vertical drop, where loft is determined by the absence of a vibratory noise floor, for example.

In another aspect, the GPS is used to determine speed down a slope. With updates as frequent as one second, there is more than enough bandwidth to acquire changing GPS data. GPS however can have large errors associated with uncertainty of positioning calculations. This may be remedied by using differential GPS. Differential GPS makes use of a fixed GPS receiver with a known position, such as at the base station. When functioning as a sensor, therefore, the GPS receiver receives updates from the base station to maintain accurate position. When large errors are received, they are rejected because the fixed receiver is at a known position, resulting in a data correction that is also applied to the moving receiver on the slope. In some areas of the United States, the correction codes for differential GPS are broadcast for general use.

In still another aspect, when using a GPS receiver, individual ski maps for each trail are downloaded into memory so that the skier may see where they are on the display. Also, 3D topographical information is also preferably downloaded so that features can be attached to these maps and to aid in performance data determination. By knowing the height in 3D space of the receiver, and with the stored height of the slope in memory, the distance off the ground is determined. Loft time is also thus determined in addition to vertical drop. Loft detection with a GPS system may thus return the value of drop distance.

In another aspect, speed is determined by use of neural network synthesis. A neural network extracts speed information from a sensor such as a microphone or an accelerometer. This is accomplished, for example, by recording microphone data on a ski or snowboard along with a true speed sensor, such as a Doppler microwave sensor. Two data sets are thus generated: the first data set contains data acquired from the microphone that will be used in the final system; and the second data set corresponds to the true device that is used as a reliable speed detector. These two data sets are fed into a neural network, and the output of the neural filter is then compared with known good speed data. The various weights of the neural network are adjusted until a match is determined. At this point, the neural network is used to process the first data set to reliably determine speed. In the event that a match is not found, a more complex but powerful network is developed. The first data set is then fed into the new net and a match is developed by adjusting the weights of the nodes. This process is repeated constantly until a match is determined. Each failure results in a larger neural network but increases the probability that the next filter will achieve a match.

In areas where the ski run is visible, the speed and trajectory of a skier may be achieved by the use of a digital imaging system, in accord with another aspect. The imaging system can thus include a CCD camera that looks at the slope and watches skiers traverse down the slope. By knowing the distances along the slope, and the fact that the camera is stationary, the distance moved is determined frame to frame, corresponding to position in time that correlates to speed. Skiers can be identified by signs they wear, including a distinctive pattern which allows identification of individual skiers.

The invention is next described further in connection with preferred embodiments, and it will be apparent that various additions, subtractions, and modifications can be made by those skilled in the art without departing from the scope of the invention

BRIEF DESCRIPTION OF THE DRAWINGS

A more complete understanding of the invention may be obtained by reference to the drawings, in which:

FIGS. **1**A and **1**B show a schematic layout of a sensing unit, data unit and base station, each constructed according to the invention, for providing performance data to participants in sporting activities;

FIGS. **2**, **3**, **4** and **5** illustrative certain operational uses of the units of FIG. **1**;

FIG. **6** graphically illustrates actual vibration data taken during a ski jump with an airtime sensor utilizing an accelerometer, in accord with the invention;

FIGS. **6**A and **6**B represent processed versions of the data of FIG. **6**;

FIG. **7** schematically illustrates a controller subsystem constructed according to the invention and which is suitable for use in the sensing unit of FIG. **1**;

FIG. **8** illustrates one exemplary pitch-detection process, in accord with the invention, which is used to determine speed;

FIG. **9** schematically illustrates process methodology of converting a plurality of acceleration values to speed, in accord with the invention;

FIG. **10** schematically illustrates process methodology of calculating speed, direction, and/or vehicle drop distance, in accord with the invention, by utilizing accelerometer-based sensors;

FIG. **11** illustrates methodology for measuring drop distance, speed and/or airtime, in accord with the invention, by utilizing a Doppler module as a drop distance, speed, and/or airtime sensor;

FIG. **12** illustrates an improvement to a snowboard, in accord with the invention;

FIGS. **13** and **14** show top and side cross-sectional views, respectively, of a speed sensor of the invention, coupled to a snowboard, for determining speed by utilizing charge cookies; and

FIG. **15** shows a schematic diagram for processing the speed sensor of FIGS. **13** and **14**;

FIGS. **16** and **17** show top and side views, respectively, of another embodiment of a speed sensor, according to the invention, coupled to a snowboard and utilizing magnetic cookies to determine speed;

FIGS. **18** and **19** show top and side cross-sectional views, respectively, of another embodiment of a speed sensor, according to the invention, coupled to a snowboard and utilizing optical windows to determine speed;

FIG. **20** shows a schematic perspective view—not to scale—of a skier engaged in competition on a mogul course and of a system, constructed according to the invention, for monitoring two power values to quantitatively measure mogul skiing performance;

FIG. **21** schematically illustrates one system including a power sensing unit constructed according to the invention for measuring activity energy for various sportsmen;

FIGS. **22**–**24** illustrate various, exemplary signals obtainable through the system of FIG. **21**;

FIG. **25** illustrates an alternative airtime, speed and/or drop distance measuring system, according to the invention, utilizing a GPS receiver;

FIG. **26** schematically shows one airtime and/or power sensing unit of the invention, mounted to a snowboard;

FIG. **27** schematically illustrates a performance system utilizing a data unit in the form of a watch;

FIG. **28** illustrates a GPS-based drop distance sensing unit of the invention;

FIG. **29** shows further detail of the unit of FIG. **28**;

FIGS. **30–33**, **34**A, **34**B, and **35** illustrate data collection hardware used to reliably collect large quantities of sensor data at a remote and environmentally difficult location, in accord with the invention;

FIG. **36** shows a schematic view of a pressure-based drop distance sensing unit of the invention;

FIG. **37** illustrates further processing detail of the unit of FIG. **36**;

FIG. **38** illustrates a power watch constructed according to the invention;

FIG. **39** shows another power watch configuration, in accord with the invention;

FIG. **40** shows a schematic view of a power/pressure system according to the invention;

FIG. **41** illustrates a two-microphone speed sensing system of the invention;

FIG. **42** illustrates process methodology for determining drop distance during airtime, in accord with the invention;

FIGS. **43** and **44** show real accelerometer data from a ski traveling at <2 mph and >15 mph, respectively, in accord with the invention;

FIG. **45** illustrates one system for interpreting spectral data such as vibration to decipher airtime, power and speed, in accord with the invention;

FIG. **46** illustrates use of a DSP to determine power in accord with the teachings of the invention;

FIG. **47** illustrates a GPS-based system of the invention;

FIG. **48** illustrates a neural network of the invention;

FIG. **49** illustrates methodology for a two sensor speed sensing unit of the invention; and

FIGS. **50–51** show representative spectra from the two sensors;

FIGS. **52–53** show illustrative correlation functions;

FIG. **54** illustrates a bending wave within a ski which can be used for power sensing, in accord with the invention;

FIG. **55** shows a two-sensor speed system constructed according to the invention;

FIG. **56** shows a multi-sensor speed system constructed according to the invention;

FIG. **57** shows a two-dimensional sensor speed system constructed according to the invention;

FIG. **58** and FIG. **59** show a Doppler-based system constructed according to the invention;

FIG. **60** shows a force measuring system of the invention; and

FIGS. **61–62** show alternative systems;

FIGS. **63–73** illustrate force sensing techniques and issues, in accord with the invention;

FIG. **74** shows a network game constructed according to the invention; and

FIG. **75** describes further features of the game of FIG. **74**;

FIG. **76** shows a boot-binding sensor arrangement constructed according to the invention;

FIG. **77** shows a boot sensor arrangement constructed according to the invention;

FIG. **78** illustrates data signals representative of sensing power in accord with the invention;

FIG. **79** illustrates a Doppler sensing system constructed according to the invention;

FIG. **80** illustrates a watch-based sensing system constructed according to the invention;

FIG. **81** illustrates a clothing-integrated sensor constructed according to the invention;

FIG. **82** shows a flow-chart illustrating drop distance logic in accord with the invention;

FIG. **83** shows a real-time performance system constructed according to the invention; and

FIGS. **84**A–**84**H illustrate integration of a sensing unit of the invention integrated into various implements, in accord with the invention.

DETAILED DESCRIPTION OF ILLUSTRATED EMBODIMENTS

FIG. **1**A illustrates a sensing unit **10** constructed according to the invention. A controller subsystem **12** controls the unit **10** and is connected to one or more sensors **14***a*–**14***d*. Typically, the subsystem **12** receives data from the sensors **14***a–d* through data line **16***a–d*; though certain sensors **14** require or permit control signals, so data lines **16***a–d* are preferably bidirectional. It is not necessary that the unit **10** incorporate all sensors **14***a*–**14***d* and only one of the sensors **14***a*, **14***b*, **14***c* or **14***d* is required so as to provide performance data. In one preferred embodiment, however, the unit **10** includes all four sensors **14***a*–**14***d*. In another preferred embodiment, only the airtime sensor **14***b* is included within the unit **10**.

The sensors **14***a*–**14***d* take a variety of forms, as discussed herein. Generally, the speed sensor **14***a* provides data indicative of speed to the controller subsystem **12** along data line **16***a*. One exemplary speed sensor **14***a* utilizes a microwave Doppler module such as made by C&K Electronics. The airtime sensor **14***b* provides data indicative of airtime to the controller subsystem **12** along data line **16***b*. One exemplary airtime sensor **14***b* utilizes a microphone such as a piezo foil by AMP Sensors, Inc. The drop distance sensor **14***c* provides data indicative of drop distance to the controller subsystem **12** along data line **16***c*. One exemplary drop distance sensor **14***c* utilizes a surface mount altimeter such as made by Sensym, Inc. The power sensor **14***d* provides data indicative of power to the controller subsystem **12** along data line **16***d*. One exemplary power sensor **14***d* utilizes an accelerometer such as made by AMP Sensors, Inc. or Analog Devices, Inc.

In certain embodiments, one sensor **14** functions to provide data that is sufficient for two or more sensors **14**. By way of example, in one embodiment, the airtime sensor **14***b* incorporates a microphone or piezo-foil which senses noise vibration of the unit **10**. This noise vibration data is used to sense motion (and/or coarse speed) and power; and thus a single sensor **14***b* functions to provide data for sensors **14***a* and **14***d*. Those skilled in the art should thus appreciate that the number of sensors **14** is variable depending upon the type of sensing transducer and upon the processing capability of the subsystem **12** (e.g., a DSP chip within the subsystem **12** can provide flexible processing of data from the sensors **14** to limit the number of sensors **14** required to provide performance data); and that the number of sensors **14** is made for illustrative purposes.

The controller subsystem **12** preferably includes a microprocessor or microcontroller **12***a* to process data from the sensors **14** and to provide overall control of the unit **10**. The

microprocessor **12***a* can include a 24 hr. clock to provide certain performance data features as described herein. The subsystem **12** also preferably includes digital memory **12***b* to store parameters used to process data from the sensors **14** and to store performance data for later retrieval. The subsystem **12** also preferably includes logic **1***c* to restrict data from the sensors **14** to reasonable data compatible with certain limits such as stored within memory **12***b*. For example, the memory **12***b* can store speed limits for the speed sensor **14***a*, and the logic **12***c* operates such that any data received from data line **16***a* is ignored if above or below a pre-set range (typically, one to five seconds for sport activities such as snowboarding).

Those skilled in the art should appreciate that alternate configurations of memory **12***b* and logic **12***c* are possible. By way of example, these elements **12***b* and **12***c* can be incorporated entirely within the microprocessor **12***a*; and thus the configuration of the subsystem **12** is illustrative and not limiting. In addition, in certain embodiments of the invention as described herein, memory **12***b* and/or logic **12***c* are not required, since relatively raw data is acquired by the unit **10** and transmitted "off board" through an optional remote data transmit section **22** (e.g., an RF transmitter) and to a data unit **50** or to a base station **70**, as shown in FIG. 1B. In such embodiments, the raw data is processed within the data unit **50** or the base station **70** so that a user of the unit **10** can obtain performance data from the data unit **50** and/or base station **70**.

To acquire signals from the sensors **14**, the controller subsystem **12** typically includes A/D converters **12***d*, such as known in the art. Each sensor **14** also typically includes a preamplifier **20** which amplifies the signal from the transducer within the sensor **14** prior to transmission along the associated data line **16**. Those skilled in the art should however appreciate that the exact configuration of the preamplifier **20**, microprocessor **12***a* and the A/D converters **12***d* depend upon specifics of the sensor **14** and the subsystem **12**. For example, certain sensors **14** available in the marketplace—such as an accelerometer subsystem—include pre-amplification and A/D conversion; so the data line **16** and subsystem **12** associated with such a sensor should support digital transmission without redundant A/D conversion.

In one embodiment, the sensing unit **10** is "stand alone" and thus includes a user interface **24** that connects to the controller subsystem **12** via a data line **26**. The interface **24** includes an ON/OFF switch **24***a*, to manually turn the unit **10** ON and OFF, and one or more buttons **24***b* (preferably including at least one toggle button to other unit functionality) to command various actions of the unit **10**, e.g., the display of different performance data on the display **24***c*. Those skilled in the art should appreciate that the interface **24** is illustrative, rather than limiting, and that elements such as the display **24***c* can reside in other areas of the unit **10**. The data line **26** is preferably bi-directional so that user commands at the interface **24** are recognized and implemented by the subsystem **12** and so that performance data stored in the memory **12***b* is displayed, upon command, at the display **24***c*.

A battery **30** is generally used to power the unit **10**, including the user interface **24**, controller subsystem **12** and sensors **14**, if power is required. As such, back-plane power lines **30***a* are shown to connect the battery **30** to the various elements **24**, **12**, **14**. One preferred sensor however is a piezo-foil that does not require power, and thus such a connection **30***a* may not be required for a sensor with a foil (note that the preamplifier **20** may still require power).

The unit **10** is generally enclosed by an appropriate housing **32**, such as a plastic injected molded housing known in the art. The housing **32** is rugged to withstand the elements such as snow, water and dirt. A water-tight access port **32***a* permits for the removal and replacement of the battery **30** within the housing **32**, as required, and as known in the art.

When the unit **10** is stand alone, the housing **32** also includes a window **32***b* (possibly the surface of the display **24***c* integrated substantially flush with the housing surface) in order to see the display **24***c*. When stand alone, the housing **32** also includes access **32***c* to the buttons **24***a*, **24***b*. The access **32***c* is for example provided through pliant rubber coverings; or the buttons **24***a*, **24***b* are made as keypads, as known in the art, that integrate directly with the surface of the housing **32**. Other techniques are available; and in each case the buttons **24***b*, **24***a* and housing **32** cooperate so as to provide an environmentally secure enclosure for the electronics such as the microprocessor **12***a* while providing an operable interface to communicate with the subsystem **12**.

The housing **32** preferably includes a universal interface **32***d* which provides flexible and conformal mounting to a variety of surfaces, such as to the relatively flat surface of a snowboard or to a round bar on a mountain bike. The universal interface **32***d* is designed to permit stand alone units **10** to be sold in stores regardless of how or where a user mounts the unit, to determine performance data for his or her particular activity.

In certain aspects, the sensing unit **10** is not "stand alone." In particular, it is sometimes desirable to mount the sensing unit **10** in an obscure location that is hard to see and reach, such as on a ski, or with a binding for a ski or snowboarding boot. In such locations, it is preferable that the unit **10** is a "black box" that is rugged to withstand abuse and-environmental conditions such as water, snow and ice. Therefore, in such a configuration, the user interface **24** is not included within the unit **10** (since snow and dirt can cover the unit **10**), but rather data from the unit **10** is communicated "off board" such as to the data unit **50**. In this configuration, a data transmit section **22** receives data from the subsystem **12** via data bus **23**; and transmits the data to a remote receiver, e.g., the data receive section **56** of the data unit **50** and/or to the data receive unit **72** of the base station **70**.

The communication between unit **10** and the data unit **50**, or base station **70**, is preferably via RF signals **45**, known in the art, which utilize antennas **25**, **58** and **78**. However, those skilled in the art should appreciate that other data communication techniques are available, including infrared transmission, inductively coupled data transmission, and similar remote (i.e., non-wired) techniques. The data transmit section **22** and antennas **25**, **58** and **78** are thus shown illustratively, whereas those skilled in the art should appreciate that other techniques can replace such elements, as desired, to perform the same function.

FIG. 1B thus also shows a schematic view of a data unit **50** constructed according to the invention. As mentioned above, the data unit **50** cooperates with the unit **10** to provide performance data to a user of the unit **10**. In one preferred embodiment, the unit **50** is sized and shaped much like a portable beeper, known in the art, and can include a display **52** to inform the user of performance data. In another preferred embodiment, the unit **50** is incorporated within a watch such as provided by manufacturers like TIMEX™ or CASIO™. A battery **30'** provides power to the elements of

the unit **50** through power lines **30***a*' (in the watch configuration, the existing battery replaces battery **30**'). A user interface **24**' operates as described above (with like numerals) to, for example, provide a display of performance data, upon command. The unit **50** includes a housing **54** that is also preferably plastic injected molded and rugged to protect the elements of the unit **50**. Although not illustrated, the housing **54** incorporates access ports and windows, as known in the art, to permit access to the buttons **24***b*' (preferably including at least one toggle button to other unit functionality), to view the display **24***a*' (as similarly described in connection with the sensing unit **10**), and/or to replace the battery **30**'. The antenna **58** represents one technique through which data **45** is communicated between the units **10**, **50**; although those skilled in the art should appreciate that other communication forms are within the scope of the invention, including communication by infrared light.

The data unit **50** generally requires a controller such as a microprocessor **53** to control the unit **50** and the elements therein. Data buses **55** provide data interface by and between the microprocessor **53** and the elements. Accordingly, data entered at the user interface **24**' is bidirectional through data bus **55** so that user commands are received and implemented by the microprocessor **53**. A memory **50***b* is typically included within the data unit **50** (or within the processor **53**) so as to store parameters and/or performance data, much like the memory **12***b*.

In a preferred embodiment, performance data is thus made available to a user via the display **52**. However, in another embodiment, performance data is transmitted to a headphones assembly **60** connected, datawise, to the microprocessor **53** so that performance data is relayed in near real time, as the user performs the associated stunt. The headphones **60** connect to the unit **50** by standard wiring **62** and into a jack **64** in the unit **50**. For example, through the user interface **24**', the user can command the microprocessor **53** to provide airtime data to the headphones **60** immediately after an airtime is detected. Other performance data can similarly be set, such as continual speed playback, through the headphones **60**.

Performance data can thus be viewed on the display **52** and/or "heard" with the headphones assembly **60**. In either case, a user commands the unit **50** to provide performance data for any memory stored within memory **12***b* or **50***b*. Accordingly, data communication between the units **10** and **50** is preferably bidirectional, so that a user's command at interface **24**' is understood and implemented by the processor **12***a*.

Those skilled in the art should appreciate that the microprocessor **53** need not be a complex or expensive microprocessor as the majority of the processing for performance data is done within the sensing unit **10**. As such, the microprocessor **53** can be a microcontroller which operates with basic functionality, e.g., to display performance data corresponding to user inputs at the interface **24**'. How processing is apportioned between the units **50**, **10** is, however, a matter of design choice. That is, for example, most of the processing can be done within the unit **50**, wherein the unit **10** can then have reduced processing capability, if desired. These choices extend to elements such as the memories **12***b*, **50***b*, as they can have redundant capability. When the unit **10** is stand alone, a user interface **24** is generally included (unless data is transmitted directly to the base station **70** for later retrieval). When the system of the invention includes both units **10**, **50**, then the user interface **24** is generally not included since the interface **24**' sufficiently controls the system. In this latter case, the functionality and configuration of the microprocessors **12***a*, **53**, memory **12***b*, **50***b* and logic **12***c* are a matter of design choice; and some elements might be eliminated to save cost. For example, the memory **50***b* can be designed to support all memory requirements of a system incorporating both units **10**, **50** to eliminate redundancy; and thus memory **12***b* would not be required.

Other configurations of a system combining units **10** and **50** exist. For example, one configuration eliminates the display **52** so that performance data is only available via the headphones assembly **60**. In another configuration, the sensing unit **10** works only with the base station **70** and without a data unit **50**. Further, such a configuration need not include a user interface **24** or a display **24***c*, since all data collected by the unit **10** can be stored and processed at the base station **70**.

The base station **70** thus includes an antenna **78** and a data receive unit **72** (or alternatively other wireless communication technology, as known in the art) to collect data signals **45**. Typically, the base station **70** corresponds to a well known facility located at the sporting area, such as a ski lodge. A base station computer **74** connects to the base station data receiver unit **72**, via the bus **76**, to collect and process data. As such, one sensing unit **10** of the invention simply includes one or more sensors **14** and enough control logic and processing capability to transmit data signals **45** to the base station **70**, so that substantially all processing is done at the base station **70**. This configuration is particularly useful for aspects of the invention such as speed skiing, where the sensing unit **10** is mounted with the speed skier's ski, but where that user has no requirement to view the data until later, after the run (or where instructors or judges primarily use the data). However, as discussed above, that speed skier can also use a data unit **50** with headphones **60** to acquire a real-time feedback of unwanted airtime, such as through an audible sound, so as to correct his or her form while skiing. In one aspect, the base station **70** preferably has the capability to collect, analyze and store performance data on a server **82** for later review.

Accordingly, the base station **70** includes a computer **74** to collect, analyze and process data signals to provide performance data to users and individuals at the base station **70**. The performance data is generally stored on a server **82**, which can have an Internet connection **84** so that performance data can be collected from remote locations. If there are multiple users, which typically is the case, then the sensing unit **10** associated with each user "tags" the data with a code identifying a particular person or unit **10**, such as known in the art. The server **82** then stores performance data tagged to a particular individual or unit so that the correct information is provided, upon request (such as through the Internet or through the computer **74**). Performance data can also be printed through printer **86** for users and persons at the base station **70**.

Although the base station **70** can be configured to process substantially raw data signals from units **10** (and particularly from the sensors **14**), the base station typically collects performance data directly from the sensing unit **10** for each of a plurality of users and stores all the data, tagged to the particular user, in the server **82**. The stored data can then reviewed as required. By way of example, a video station **90** can be included with the base station **70** and users, instructors or judges can review the performance data in conjunction with video data collected during the run by known video systems (or television systems).

With further reference to FIGS. **1**A and **1**B, the displays **24***c*, **52** can be one of any assortment of displays known to

those skilled in the art. For example, liquid crystal displays (LCDs) are preferred because of their low power consumption (for example, LCDs utilized in digital watches, portable computers and paging units are appropriate for use with the invention). Other suitable displays can include an array of light emitting diodes (LEDs) arranged to display numbers.

The headphones assembly **60** can also be replaced with a heads-up display unit, known in the an, such as described in connection with U.S. Pat. No. 5,162,828, incorporated herein by reference.

As illustrated in FIG. **2**, the invention in one embodiment operates as follows. The sensing unit **10'** is mounted via its housing **32** to a sporting vehicle, such as a snowboard or mountain bike, or such as the ski **102** of FIG. **2**. As illustrated, the skier **100** is catching air during a jump off the ground **103**. The skier **100** can obtain instantaneous airtime data via headphones **60'**, discussed above, or he can later retrieve the airtime data through a data unit **50'** (shown illustratively on the skier's jacket **100***a* when typically the unit **50'** would be within a pocket or connected to a belt of the skier **100**) or at a base station **70'** (FIG. 1B).

FIG. **3** shows another typical use of the unit **10** of FIG. 1A. In particular, FIG. **3** shows the sensing unit **10** mounted onto a ski **126**. As is normal, the ski **126** is mounted to a skier **128** (for illustrative purposes, the skier **128** is only partially illustrated), via a ski boot **130** and binding 130a, and generally descends down a ski slope **132** with a velocity **134**. Accordingly, one use of a unit **10** with a speed sensor is to calculate the peak speed of the ski **126** (and hence the skier **128**) over a selectable period of time, e.g., during the time of descent down the slope **132**. However, the unit **10** also provides information such as drop distance, airtime and power, as described herein, provided the associated sensors are included with the unit **10**.

Another use of the unit **10** of FIG. 1A is to calculate the airtime of a vehicle such as the ski **126** (and hence the user **128**) during the descent down the slope **132**. Consider, for example, FIG. **4**, which illustrates the positions of the ski **126'** and skier **128'** during a lofting maneuver on the slope **132'**. The ski **126'** and skier **128'** speed down the slope **132'** and launch into the air **136** at position "a," and later land at position "b" in accord with the well-known Newtonian laws of physics. With an airtime sensor, described above, the unit **10** calculates and stores the total airtime that the ski **126'** (and hence the skier **128'**) experiences between the positions "a" and "b" so that the skier **128'** can access and assess the "air" time information.

FIG. **5** illustrates a sensing unit **10"** mounted onto a mountain bike **138**. FIG. **5** also shows the mountain bike **138** in various positions during movement along a mountain bike race course **140** (for illustrative purposes, the bike **138** is shown without a rider). At one location "c" on the race course **140**, the bike **138** hits a dirt mound **142** and catapults into the air **144**. The bike **138** thereafter lands at location "d". As above, with speed and airtime sensors, the unit **10** provides information to a rider of the bike **138** about the speed attained during the ride around the race course **140**; as well as information about the airtime between location "c" and "d".

Airtime sensors such as the sensor **14***b* of FIG. 1A may be constructed with known components. Preferably, the sensor **14***b* incorporates either an accelerometer or a microphone. Alternatively, the sensor **14***b* may be constructed as a mechanical switch that detects the presence and absence of weight onto the switch. Other airtime sensors **14***b* will become apparent in the description which follows. For background, consider U.S. Pat. No. 5,636,146.

An accelerometer, well known to those skilled in the art, detects acceleration and provides a voltage output that is proportional to detected acceleration. Accordingly, the accelerometer senses vibration—particularly the vibration of a vehicle such as a ski or mountain bike—moving along a surface, e.g., a ski slope or mountain bike trail. This voltage output provides an acceleration spectrum over time; and information about airtime can be ascertained by performing calculations on that spectrum. Specifically, the controller subsystem **12** of FIG. 1A stores the spectrum into memory **12***b* and processes the spectrum information to determine airtime.

FIG. **6** shows a graph **170** of an actual vibrational spectrum **172** acquired by an airtime sensor **14***b* (utilizing an accelerometer) during a ski jump and stored in memory **12***b*, in accord with the invention. The airtime sensing unit was mounted to a ski boot which in turn was mounted with a ski binding. The sensitive axis of the accelerometer was oriented substantially vertical to the flat portion of the ski surface. The vertical axis **174** of the graph **170** represents voltage; while the horizontal axis **176** represents time. At the beginning of activity **177**—such as when a user of the sensing unit **10** presses the start/stop button **24***a*—the airtime sensor **14***b* began acquiring data and transferring that data to the controller subsystem **12** via communication lines **16***b*. The initial data appears highly noisy and random, corresponding to the randomness of the surface underneath the vehicle (i.e., the ski). At time "t_1" the skier launched into the air, such as illustrated as location "a" in FIG. **4**; and he landed at time "t_2," such as illustrated as location "b" in FIG. **4**. The vibrational spectrum **172** between t_1 and t_2 is comparatively smooth as compared to the spectrum outside this region because the user's vehicle—i.e., the ski boot—was in the air and was not therefore subjected to the random vibrations of the ski slope (i.e., vibrations which travel through the binding, through the boot and into the sensing unit). Accordingly, the relatively smooth spectrum between t_1 and t_2 is readily discerned from the rest of the spectrum by the controller subsystem **12** and evaluated for airtime; specifically, airtime is t_2-t_1.

FIG. **6** also shows that the spectrum stops at the end **178** of the sporting activity, when the controller subsystem stopped taking data (such as in response to an ON/OFF toggle on switch **24***a*).

Typical accelerometer taken from a skier going down a hill is thus shown in FIG. **6**. In order to determine power, or shock, in one aspect, the data is accumulated by taking the absolute value and integrating that data. FIG. **6**A graphically shows the result of integrating the data of FIG. **6**.

Another method of the invention for determining a measure of power associated with stored accelerometer data is to perform a Fast Fourier Transform on the data and to integrate the magnitude to find the total energy associated therewith. In the plot of FIG. **6**B, the data from FIG. **6** was transformed with an FFT routine, and then converted to absolute value, point by point, and integrated, providing one measure of energy.

The data of FIG. **6** can also be reduced to a single number such as via a root-mean-square of the data. This is done by squaring each sample of the data and then summing. The resultant integration can then be divided by the duration of the data acquisition run, giving a mean, with the resulting number rooted. In the case of the FIG. **6**, that would provide a value 4.0.

A microphone, also well known to those skilled in the art, detects sound waves and provides a voltage output that is

responsive to detected sound waves. Accordingly, a microphone, like the accelerometer, mounted to the vehicle senses the vibration of a vehicle, such as a ski or mountain bike, moving along a surface, e.g., a ski slope or mountain bike trail. By way of analogy, consider putting one's ear flat onto a desk and running an object across the desk. As one can readily determine, the movement of the object on the desk is readily heard in the ear. Likewise, a microphone within an airtime sensor **14***b* readily "hears" the vibrational movements of the vehicle on the surface. Therefore, like the aforementioned accelerometer, a vibrational spectrum such as shown in FIG. **6** is generated by a microphone-based airtime sensor during a user's sporting activity. As above, the controller subsystem **12** utilizes this spectrum to determine airtime.

A microphone is preferably coupled with a coupling layer of material that matches the impedance for the propagation of compression waves (commonly referred to as "sound waves" when in air) between the impedance of the vehicle, e.g., the ski or board, and the microphone transducer, thus transmitting the most "sound" power to the sensor. This "matching layer" of intermediate impedance is commonly used in sonar, as known in the art, and it is easily applied, such as with glue.

The airtime sensor **14***b* of FIG. **1**A can also incorporate a switch that rests below the boot of the ski. Through the switch, the airtime sensor senses pressure caused by the weight of the user within the boot. That is, when the skier is on the ground, the boot squeezes the switch, thereby closing the switch. The closed switch is detected by the controller subsystem **12**, FIG. **1**A, as a discrete input. When a skier jumps into the air, for example, the switch opens up by virtue of the fact that relatively no weight is on the switch; and this opened switch is also detected and input into controller subsystem **12**. The controller subsystem **12** counts at known time intervals (clock rates) for the duration of the opened switch, corresponding to the jump, to determine airtime.

Another airtime sensor **14***b* of the invention changes capacitance as a function of a change of applied pressure. For example, a material beneath the boot that changes capacitance under varying applied pressures can be used for this airtime sensor. The change in capacitance is converted to a digital signal by conditioning electronics within the controller subsystem **12** to determine airtime.

The controller subsystem of the invention is constructed with known components, such as shown in FIG. **7**, which illustrates an alternative configuration to the subsystem **12** of FIG. **1**A. Specifically, FIG. **7** shows controller subsystem **150** constructed according to the invention and including a Central Processing Unit (CPU) **152**, memory **154**, interface electronics **156**, and conditioning electronics **158**. The user interface **160**, such as the interface **24** of FIG. **1**A, and including the button inputs **24***b*, connects to the subsystem **150** such as shown and directly to the conditioning electronics **158**. The display **162**, such as the display **24***c* of FIG. **1**A, preferably connects to the subsystem **150** such as shown and directly to the CPU **152**.

The CPU **152** includes a microprocessor **152***a*, Read Only Memory (ROM) **152***b* (used to store instructions that the processor may fetch in executing its program), Random Access Memory (RAM) **152***c* (used by the processor to store temporary information such as return addresses for subroutines and variables and constant values defined in a processor program), and a master clock **152***d*. The microprocessor **152***a* is controlled by the master clock **152***d* that provides a master timing signal used to sequence the microprocessor **152***a* through its internal states in its execution of each processed instruction. The clock **152***d* is the master time source through which time may be deduced in measuring velocity or air time (for example, to determine the elapsed time from one event to another, such as the lapsed time "t_1" to "t_2" of FIG. **6**, the clock rate provides a direct measure of time lapse).

The microprocessor subsystem **150**, and especially the CPU **152**, are preferably low power devices, such as CMOS; as is the necessary logic used to implement the processor design.

The subsystem **150** stores information about the user's activity in memory. This memory may be external to the CPU **152**, such as shown as memory **154**, but preferably resides in the RAM **152***c*. The memory may be nonvolatile such as battery backed RAM or Electrically Erasable Programmable Read Only Memory (EEPROM). Sensor inputs **164** from the various sensors **14** are connected to the conditioning electronics **158** which filters, scales, and, in some cases, senses the presence of certain conditions, such as zero crossings. This conditioning essentially cleans the signal up for processing by the CPU **152** and in some cases preprocesses the information. These signals are then passed to the interface electronics **156**, which converts (by A/D) the analog voltage or currents to binary ones and zeroes understood by the CPU **152**.

The invention also provides for intelligence in the signal processing, such as achieved by the CPU **152** in evaluating historical data. For example, airtime may be determined by the noise spectra that changes abruptly, such as indicating a leap, instead of a noise spectra representing a more gradual change that would occur for example when a skier slows to a stop. As previously noted, a minimum quiet time is required, in certain embodiments of the invention, to differentiate between airtime and the natural motions associated with turning and skiing (e.g., jump skiing). Further, in other certain embodiments, a maximum time is also programmed to differentiate airtime from an abrupt stop, such as standing in a lift line.

In accord with the invention, if speed is calculated within the sensing unit **10**, FIG. **1**A, then the speed sensor **14***a* can incorporate one or more of the following: (1) a pitch detection system that detects the "pitch" of the vibrational spectrum and that converts the pitch to an equivalent speed; (2) a laser-based, RF-based, or sound-based Doppler module; (3) accelerometers or microphones; (4) pressure transducers; (5) voltage-resistance transducers; and (6) a DSP subsystem that quantifies and bins accelerometer or sound data according to frequency. Other speed sensors **14***a* will become apparent in the description which follows. For background, consider U.S. Pat. No. 5,636,146.

As described above, detection of airtime is facilitated by detecting motion, which is less difficult that determining speed. The above speed sensors are thus also suitable as "motion" detect sensors that assist the controller subsystem **12** to logic out unwanted data, e.g., airtime data when standing in line.

In accord with one embodiment, a vibrational spectrum is obtained through an airtime sensor with an accelerometer or microphone embodiment; and this spectrum is analyzed by the controller subsystem to determine the pitch of the vibration and, thereby, the equivalent speed. By way of example, note that a skier generates a scraping sound on hard-packed snow and ice. When the skier changes velocity, that scraping sound changes in pitch (or in volume). By calibrating the subsystem **12** to associate one pitch (or

volume) as one velocity, and so on, the speed of the vehicle (e.g., ski and mountain bike) is determined by spectral content. One technique for determining the "pitch" of the spectrum is to determine the best fit sine wave to the vibrational spectrum data. This sine wave has a frequency, or "pitch" that may be quantified and used to correlate velocity. The spectrum can also be sampled and "binned" according to frequency, as discussed below, to determine changes in volume at select frequencies (or ranges of frequencies) which provide speed correlation.

Spectral content may be determined, at least in part, by the conditioning electronics **158** of FIG. **7**. The electronics can also assess the rise times to infer a bandwidth of the information. The conditioning electronics **158** and/or CPU **152** can also measure the time between successive zero crossings, which also determines spectral content.

For example, FIG. **8** illustrates a spectrum **166** generated from combination speed and airtime sensor **14***a*, **14***b* in the form of an accelerometer or microphone. The spectrum **166** thus represents an acceleration spectrum or sound spectrum such as described herein. The controller subsystem **12** of FIG. **1**A evaluates the spectrum **166** and generates a best-fit sine wave **167** to match the primary frequency of the spectrum **166** over time. FIG. **8** shows illustratively a situation where a vehicle, such as a ski, moves slowly at first, corresponding to a lower sine-wave frequency, then faster, corresponding to a higher frequency sine wave, and then slower again. This pitch transition is interpreted by the controller subsystem as a change of speed. Specifically, the controller subsystem has calibration data to associate a certain frequency with a certain speed, for the given vehicle; and speed is thus known for the variety of pitches observed during an activity, such as illustrated in FIG. **8**.

Variations in the character of the snow, and other environmental factors such as sun exposure, and user altitude, can also be factored in speed sensing, in another aspect. Further, speed spectra likely varies depending on the characteristic spatial scale(s) of the ground, e.g., the snow for a fixed skier speed. These spatial scales are set by the temperature at which the snow was deposited, thawing and refreezing cycles, and the sun exposure even within a day.

It should be noted that pitch information (or volume data) is surface dependent (and vehicle dependent). For example, a ski-over-snow-speed-spectrum has a different spectrum than a bicycle-over-ground-spectrum. Accordingly, different calibrations should be made for different vehicles and speeds, in accord with the invention. Further, certain spectrums may actually decrease in frequency as speed increases, which should be calibrated to obtain correct speed information. These calibrations are typically programmed into the controller subsystem memory, e.g., the memory **12***b* of subsystem **12** of FIG. **1**A. Further, in certain embodiments of the invention, the sensing unit (or data unit or base station, as appropriate) stores different spectrum calibrations for different activities so that a user can move the sensing unit from one sport to another. Accordingly, one or more buttons such as the buttons **24***b* are used to selectively access the different spectrum calibrations.

It is well known that Doppler radar is used by police vehicles to detect speed; and a speed sensor incorporating a Doppler module can be used to determine speed. U.S. Pat. Nos. 5,636,146, 4,722,222 and 4,757,714 provide useful background.

FIG. **9** schematically illustrates process methodology, according to the invention, which converts a plurality of acceleration inputs to speed. For example, when a plurality of six accelerometers are connected to a controller subsystem, the process methodology of the invention is preferably shown in FIG. **9**. Specifically, six accelerometers are connected with various sensitive orientations within a speed sensing unit **14***a* to collect pitch **207***a*, yaw **207***b*, roll **207***c*, surge **207***d*, heave **207***e*, and sway **207***f* accelerations. These accelerations are conditioned by the conditioning electronics **158**' through the interface electronics **156**' and CPU **152**' to calculate speed, such as known to those skilled in the art of navigational engineering (for example, *Gyroscopic Theory, Design, and Instrumentation* by Wrigley et al., MIT Press (1969); *Handbook of Measurement and Control* by Herceg et al, Schaevitz Engineering, Pensauker, N.J., Library of Congress 76-24971 (1976); and Inertial Navigation Systems by Broxmeyer, McGraw-Hill (1964) describe such calculations and are hereby incorporated herein by reference). The elements **158**', **156**' and **152**' are similar in construction to the elements **158**, **156** and **152** described in connection with FIG. **7**.

FIG. **10** schematically illustrates further process methodologies according to the invention wherein the six acceleration inputs **207***a*–**207***f* are processed by a controller subsystem of the invention (e.g., subsystem **12** of FIG. **1**A) such that centripetal, gravitational, and earth rate compensations are performed so that the various accelerations are properly integrated and compensated to derive speed (and even direction and distance). Specifically, a controller subsystem of the FIG. **10** embodiment includes a centripetal acceleration compensation section **208***a* which compensates for motions of centripetal accelerations via inputs of surge **207***d*, heave **207***e*, and sway **207***f*. A gravity acceleration compensation section **208***b* in the subsystem further processes these inputs **207***d*–**207***f* to compensate for the acceleration of gravity, while a earth rate compensation section **208***c* thereafter compensates for the accelerations induced by the earth's rotation (e.g., the earth rate acceleration at the equator is approximately opposite in direction to the force of gravity).

Also shown in FIG. **10** are translational integrators **209***a*–**209***c* which convert the compensated accelerations from inputs **207***d*–**207***f* to translational velocities by integration. Integrators **210***a*–**210***c* likewise integrate inputs of pitch **207***a*, yaw **207***b*, and roll **207***c* to angular velocity while integrators **211***a*–**211***c* provide a further integration to convert the angular velocities to angular position. The angular positional information and translational velocity information is combined and processed at the speed and direction resolution section **212** to derive speed and direction. Preferably, the subsystem with the components **208**, **209**, **210**, **211** and **212** is calibrated prior to use; and such calibration includes a calibration to true North (for a calibration of earth rate).

It should be noted that fewer of the inputs **207***a*–**207***f* may be used in accord with the invention. For example, certain of the inputs **207***a*–**207***f* can be removed with the section **208***a* so that centripetal acceleration is not compensated for. This results in an error in the calculated speed and direction; but this error is probably small so the reduced functionality is worth the space saved by the removed elements. However, with the increased functionality of the several inputs **207***a*–**207***f*, it is possible to calculate drop distance in addition to speed because distance in three axes is known. Therefore, the invention further provides, in one embodiment, information for displaying drop distance achieved during any given airtime, as described above.

As used herein, "cookie" measurements refer to one technique of the invention for measuring speed. In this

method, for example, the speed sensor drops a measurable entity—e.g., electronic charge—into the snow and then picks it up later at a known distance away to determine the speed. The "charge" in this example is the "cookie."

In skiing, for example, this method involves dropping a cookie as the ski travels and then detecting the cookie at a known distance down the length of the ski. The time between placement and detection given a known length between the two occurrences determines the speed. A cookie therefore represents the placement of some measurable characteristic in the snow underneath. This characteristic may be electrical charge, magnetic moments, a detectable material such as ink, perfume, fluorescent dye or a radiation source. The cookies may be dropped at a constant rate, i.e. cookies per second, or at a fixed distance between cookies. In such cases the cookies are said to be dropped in a closed loop fashion. Also the amount of charge, magnetic moment, or detectable material may be controlled so that the detection occurs just above threshold. This tends to minimize the amount of electrical power used and to minimize the amount of material dispensed. In one aspect, the cookies correspond to dots of dye that are dropped at regularly spaced intervals and which glow when irradiated with a pumping light spectrum, for example a UV pump to drive fluorescence response in blue/blue-green, or a red pump to drive fluorescence in the IR.

In FIGS. **13** and **14**, a snowboard **498** traveling in a direction **504** has two sets of electrodes attached to the ski. The first electrode set **503** is used to charge a small amount of snow **499** by applying an electric potential across terminals **501***a* and **501***b*. The potential in that snow **499** is then read by the second set of electrodes **502**, accomplished by sampling the potential between terminals **500***a* and **500***b*.

Since the level of charge in the snow **499** is quite low, an instrumentation amplifier may be used to condition the signal, such as known to those skilled in the art. FIG. **15** shows the charge and detection loop according to one preferred embodiment. A potential source (e.g., a battery such as battery **30**, FIG. **1**A) with an electrode set **503** are used to charge the first electrodes **501***a*, **501***b*. When the output of the instrumentation amplifier **501** is above a predetermined threshold, the control and timing circuit **505** triggers a flip-flop (not shown) that notifies the controller subsystem **12**, FIG. **1**A, that the charge is detected. The time that transpired between placing the charge at **503** to detecting the charge at **502** is used to determine speed. The speed is the distance between the two sets of electrodes **503** to **502** divided by the time between setting and receiving the charge. The functionality of the timing and control circuit **505** can be separate or, alternatively, can be integrated with the controller subsystem such as described herein.

The second set of electrodes **502** that is used to detect the charge may also be used to clear the charge such as by driving a reverse voltage (from the control and timing circuit **505** and through direct circuitry to the electrodes **502**). In this manner to total charge resulting from the ski traversing the field of snow will be zero so that there will be no charge pollution. Also it will not confuse another ski speed detection system according to the invention.

In summary, the speed sensor of FIGS. **13–15** thus include two electrode pairs, **503**, **502**.

The situation described above is also applicable to magnetic moment cookies. In FIGS. **16** and **17**, for example, a snowboard **507** shown traveling in a direction **512** has an electromagnet **511** mounted on top of the snowboard **507** and a magnetic sensor **510** at a rearward position. As the snowboarder skis along direction **512** the electromagnet **511** impresses a magnetic moment into the snow and water that resides under the snowboard **507**. This is done by asserting a strong magnetic field from the electromagnet **511** and through the snowboard **507** for a short period of time. This polarization is then detected by the magnetic sensor **510**. The period of time it takes from creating the magnetic moment at **511** to detecting it at **510** is used in determining the speed of the snowboard **507** (such as through control and timing circuitry described in connection with FIG. **15**). The magnetic sensor **510** may also be used to cancel the magnetic moment so that the total magnetic moment will be zero after the ski travels from placement through detection and removal.

Those skilled in the art should appreciate that the elements **510**, **511** are shown grossly separated, for purposes of illustration. Placing the elements closer (and preferably within the same housing **32**, FIG. **1**A) increases the required response time of the controller subsystem, though it decreases the amount of power required to detect the signal (since the cookie signal is stronger over a shorter period).

A similar speed sensing system is shown in FIGS. **18** and **19**. Specifically, the speed sensor of FIG. **18** includes an optical correlation subsystem with a laser source and receiver contained in package **522**. The laser is directed through two windows **520** and **521** within a snowboard **530**. The laser backscatter is cross correlated over time between the two windows **520**, **521**. This means that the two time signals are multiplied and integrated over all time with a fixed time delay between the two signals. The time delay between the two backscatter signals that yields the highest cross correlation is the period of time the snowboard takes to travel the distance of the two windows **520**, **521**. The speed of the snowboard **530** is determined by knowing the window separation distance. The source does not have to be a laser but can be noncoherent visible light, infrared or any high frequency electromagnetic radiation source.

One drop distance sensor **14***c* of the invention utilizes an altimeter such as manufactured by Sensym, Inc. The altimeter is calibrated relative to height variations and the sensing unit **10** thereafter monitors pressure change to assess drop distance. Accordingly, in the preferred embodiment, such a drop distance sensor operates with an airtime sensor **14***b* since drop distance is generally only meaningful in connection with a jump. When the sensing unit **10** detects an airtime, the same period is evaluated through the altimeter to determine drop distance over that period. Accordingly, altimeter data should be stored in the memory **12***b* (or alternatively in the memory **50***b*, or in the base station **70**) for at least the period of the longest expected airtime (e.g., greater than five seconds for snowboarding, or greater than the period set by the user).

Drop distance can also be determined through a drop distance sensor that includes a plurality of accelerometers, such as shown in FIGS. **9** and **10**. Through integration of appropriate acceleration vectors indicative of a user's movement perpendicular to the ground, drop distance is determined. A double integration of accelerometers in the direction perpendicular to ground (or thereabouts) during an airtime period provides the correct signals to determine skier height.

It should be apparent to those in the art that the accelerometers of FIGS. **9** and **10** provide sufficiently detailed information such that the entire sensing unit can be mounted to a user of the system directly, rather than onto a vehicle. With the scope of the compensations described in connec-

tion with FIG. **10**, for example, movements of the human body, e.g., centripetal motions, may be compensated for to derive speed and/or airtime information that is uncorrupted by the user's movements. Such compensations, however, require powerful processing capability.

Other features can also be determined in accord with the invention such as through measurements with the system of FIG. **10**. For example, once you know your starting velocity, you can measure distance traveled and height above the ground by knowing the air time for a given jump. Other ways of doing this are by using accelerometers to integrate the height distance. The preferred way of determining distance is to know your velocity at the jump start location, such as described herein, and to use the airtime to establish a distance traveled, since distance is equal to velocity times time (or airtime).

For height, a sensing unit of the invention also determines height by looking at the time to reach the ground during an airtime. That is, once in the air, you are accelerating towards the ground at 9.81 meters per second^2 (at sea level). The sensing unit thus first determines the time for which there is no more upwards movement (such as by using an accelerometer or level sensor that knows gravity direction and which changes directions at the peak, or by using circuitry which establishes this movement, or by determining the angle immediately prior to launch to quantify a bias distance or time to a default measure), and then calculate the distance traveled (in height) by knowing that the default measure is equal to ½*a*t^2, where a is the acceleration of gravity (9.81 M/s^2) and t is the airtime after the peak height is reached. If the person does not travel upwards or downwards at the start of a jump, then the height is simply ½*a*t^2 where t is the entire airtime.

A Doppler module can additionally provide height information; and thus a Doppler module can function as both a speed sensor **14***a* and a drop distance sensor **14***c*. Further, since the impedance changes when a vehicle to which the Doppler module leaves the ground, the Doppler module can further function as an airtime sensor **14***b*. By sweeping the frequency through various frequencies, as known in the art, the signal frequency mix can be monitored to determine altitude relative to the direction of the antenna lobes (typically such Doppler systems are used as microwave ranging systems). Preferably, therefore, there are two antennas: one to perform Doppler speed, with high spatial accuracy in the antenna lobe so that speed is achieved, and another antenna to provide a lobe that roughly covers the ground area in about a 60 degree cone under the user so as to achieve first-return distance measurement. With reference to FIG. **11**, a Doppler module **248** functions as the drop distance sensor and resides within a sensing unit **250** mounted to a snowboard **252** (shown in the air, above the ground **254**). The radar or microwave beam **256** from the module **248** extends in a cone **258** to adequately cover the ground **254** so as to provide the correct measure of height on a first return bases (that is, any portion of the beam **256** which first creates a Doppler signal sets the height; other height measurements can alternatively be used, including utilizing average return data). A cone **256** of angle Φ (e.g., 25–70 degrees in solid angle) provides adequate coverage. The Doppler antenna signal fills the conical beam **256** so as to determine drop distance from any orientation of the vehicle (i.e., the snowboard **252**), so long as that orientation relative to ground is less than the angle Φ.

The Doppler module **248** may also be used as an airtime sensor since its signal strength or form changes when the vehicle **252** is off the ground. This change of signal is thus detected by the controller subsystem to determine airtime.

FIG. **12** shows a representative top view for one other snowboard constructed in accord with the invention. Specifically, a snowboard **270**, with boot holder **271**, incorporates a sensing unit **272** constructed according to the invention. The unit **272** has a display **274**, a user interface **276** that provides a user with buttons to selectively access performance data, as described above, and one or more sensors **278** to provide data to the controller subsystem to quantify performance data. One sensor **278**, for example, can include the Doppler module **248** of FIG. **11**.

FIG. **20** illustrates one embodiment of a bump skier **598** utilizing two power sensing units **600** in a mogul competition on a slope **612** (note that the skier is grossly over-sized relative to the slope **612**, for purposes of illustration). One power sensing unit **600**A mounts to the ski **602** (or alternatively to the user's lower leg **604***a*), and another power sensing unit **600**B mounts or attaches to the user's upper body **604**. An RF signal generator **606** communicates (via antenna **606***a*) the power values to a controller **607** (e.g., similar to the computer and server **74**, **82** of FIG. **1**B) at a base facility **608** (e.g., where the judges for the competition reside). Those skilled in the art should appreciate that one or both power sensing units **600** can communicate the information to the base **608**, as shown; however, one power unit can also communicate to the other power unit so that one unit **600** communicates to the base **608**. However, in either case, an RF transmitter is needed at each sensing unit **600** (similar to the data transmit section **22**, FIG. **1**A). Alternatively, other inter-power meter communication paths are needed, e.g., wiring, laser or IR data paths, and other techniques known to those in the art, such as discussed herein.

The combined signals from the units **600** provides a force differential between the lower legs **604***a* and the upper body **604**, giving an actual assessment of a competitor's performance. A computer **607** at the base station **608** divides one signal by the other to get a ratio of the power values measured by the two units **600** during the run. The units **600** start transmitting data at the starting gate **610** and continue to transmit data to the base **608** during the whole run on the slope **612**. The units **600** can also be coupled to the user via a microphone **614** (and wire **616**) to provide a hum or pitch which tells that user how effective his/her approach is. Although it is not shown, one or both units **600** have controller subsystems so as to enable the features described herein in connection with power sensing units. For example, a microprocessor can be used to provide a power measurement in "g's" for the competitor once she reaches the base **608**.

Those skilled in the art should appreciate that one of the units **600** can alternatively process the power values (e.g., divide the instantaneous power value of one unit by the power value of the second unit, to provide a ratio) generated by each of the units and can transmit a ratio of the values to the base station **608**, rather than require the base station to perform the calculation.

One accelerometer-based vibration and shock measurement system (e.g., a power sensing unit) **620** of the invention is shown in FIG. **21**. System **620** measures and processes accelerations associated with various impact sports and records the movement so that the user can determine how much shock and vibration was endured for the duration of the event. The duration is determined with a simple start stop button **622**, although duration can alternatively start with an automatic recording that is based on the measured acceleration floor (or by an event such as triggered by the start gate **610**, FIG. **20**).

In system **620**, vibrations and shock associated with skiing or exercise are measured by the use of an accelerometer **624** (or other motion or force-measuring device, e.g., a microphone or piezoelectric device) as the power sensor and of conditioning electronics **626** within the controller subsystem. The accelerometer **624** typically is AC-coupled so that low frequency accelerations, or the acceleration due to gravity, are ignored. The accelerometer output is then conditioned by passing the signal through a band pass filter within the electronics **626** to filter out the low frequency outputs, such as the varying alignment to the gravity vector, as well as the high frequency outputs due to electrical noise at a frequency outside the performance of the accelerometer **624**. The resulting signal is one that has no DC component and that is bipolar such as the waveform shown in FIG. **22**.

The system **620** thus conditions the signal and remove the negative components of the waveform in FIG. **22**. This is done, for example, by rectifying the output of the bandpass signal. Since a positive acceleration is likely to be accompanied by a negative of the same area, the area of the positive may be doubled to obtain the area of the positive and negative. The signal may also be processed by an absolute value circuit. This can be done via an Operational Amplifier circuit such as the one shown in the *National Semiconductor Linear Applications Data Book Application Note AN*-31, which is herein incorporated by reference. In accord with certain processes, known to those skilled in the art, positive values become positive; and negative values become positive. By way of example, the waveform of FIG. **22** is processed, for example, to the waveform of FIG. **23**.

A unipolar waveform like the one shown in FIG. **23** is then integrated over time by the system **620** so that total acceleration is accumulated. This can also be averaged to determine average shock. The signal of FIG. **23** is therefore processed through an integrator (within the electronics **626** or the microprocessor **628**) which will result in the signal shown in FIG. **24**. A power value can then be displayed to a user via the display **630** (e.g., such as the display **24***c* or **52**, FIGS. **1**A and **1**B).

The period of integration may be a day or simply a single run down a slope; or it may be manually started and stopped at the beginning and end of a workout. The output is then fed into a logarithmic amplifier so that the dynamic range is compressed. The logarithmic amplifier can be provided within the microprocessor **628**.

At any stage, the system **620** can be fed into an analog-to-digital converter (such as within the electronics **626**) where signal processing is done digitally. The output of the accelerometer **624** should anyway pass through an anti-aliasing filter before being read by a microprocessor **628**. This filter is a low pass filter that ensures the highest frequency component in the waveform is less than half the sampling rate as determined by the Nyquist criteria.

The accelerometer **624** output can also be processed through an RMS circuit. The Root Mean Square acceleration is then determined from the following formula:

$$A_{\mathrm{RMS}} \approx \frac{1}{T}\left[\int_0^T A^2(t)\partial t\right]^{\frac{1}{2}}$$

where T is the period of the measurement and A (t) is the instantaneous accelerometer output at any time t. The period T may be varied by the user (i.e., to control the power period) and the output is a staircase where each staircase is of width T. This is then peak-detected and the highest RMS acceleration is stored; and an average acceleration and a histogram are stored showing a distribution of RMS accelerations. These histograms are displayed on a Liquid Crystal graphical display **630**, for example, as a bargraph.

An alternate embodiment is to record the signal in time and transform the signal to the frequency domain by performing a Fourier transformation of the data (such as within the electronics **626** or the microprocessor **628**). The result is a distribution of the accelerations as a function of frequency which is then integrated to determine the total signal energy contained (preferably over a frequency range). The distribution is, again, plotted on the LCD display **630**.

Data may also be acquired by the accelerometer and telemetered to the electronics **626** via an RF link **631** back to a remote base **632** for storage and processing (e.g., such as at the base station **70**, FIG. **1**B). This enables ski centers to rent the accelerometer system **620** which is then placed on a ski (or snowboard) to record a day of activity. A printout can also be provided to the renter at the end of the day.

A separate memory module or data storage device **634** can also be used to store a selected amount of time data which can be uploaded at the end of the day. The data can be uploaded itself via a Infrared link readily available off the shelf, as well as through a wire interface or through an RF link **631**.

The system **620** is particularly useful in impact sports that include mountain biking, football, hockey, jogging and any aerobic activity, including volley-ball and tennis. Low impact aerobics have become an important tool in the quest for physical fitness while reducing damage to the joints, feet and skeletal frames of the exerciser. The system **620** can be integrated within a shoe and may thus be used by a jogger to evaluate different running shoes. Alternatively, when calibrated, the system **620** is useful to joggers who can gate it to serve as a pedometer. The addition of a capacitor sensor in the heel helps determine average weight. A sensor for skin resistivity may additionally be used to record pulse. The shoe can also record the state of aerobic health for the jogger which is of significant interest to a person involved in regular exercise. The system **620** can also be used to indicate the gracefulness of a dancer while they develop a particular dance routine. A football coach may place these systems **620** in the helmets of the players to record vibration and shock and use it as an indicator of effort, or in the "football blocking dummies" to quantify player effort.

In skiing, the system **620** has other uses since a skier glides down a mountain slope and encounters various obstructions to a smooth ride. Obstructions such as moguls cause the skier to bump and to induce shock. This shock can be measured by the accelerometer **624** and accumulated in a memory **634** to keep a record of how much shock was encountered on a particular ski run. Exercisers may use such a system **620** to grade their ability to avoid impact. A jogger may use the system **620** to evaluate their gate and determine their running efficiency. This becomes important with a greater emphasis being placed on low impact aerobics.

Those skilled in the art should appreciate that other improvements are possible and envisioned; and fall within the scope of the invention. For example, the system **620** mounted on a ski may be used to determine the total shock and vibration encountered by a skier traveling down a slope. Mounting an additional accelerometer **624** above the skier's hip allows an isolation measurement between upper torso and ski, as described above. This can be used to determine how well a trained skier becomes in navigating moguls. This measurement of the isolation is made by taking an average of the absolute value of the accelerations from both accel-

erometers **624**. The ratio of the two accelerations is used as a figure of merit or the isolation index (i.e., the ratio between two measurements such as on the ski and the torso, indicating how well the mogul skier is skiing and isolating knee movement from torso movement).

To avoid the complications of gravity affecting the measurements of system **620**, a high pass filter should be placed on the accelerometer output or within the digital processor sampling of the output. All analog signals should have antialiasing filters on their outputs whose bandwidth is half the sampling frequency. Data from the accelerometers **624** is preferably sampled continuously while the circuits are enabled. The processor **628** may determine that a ski run has started by a rise in the acceleration noise floor above a preset trigger and at a set duration. In another embodiment, a table is generated within the processor of each sufficiently high acceleration recorded from the ski. The corresponding upper torso measurement may also be recorded along with the ratio of the two measurements. The user can additionally display the n-bumpiest measurements taken from the skis and display the isolation index.

FIG. **25** shows a sport vehicle **700** (here shown as a snowboard) mounted with a GPS sensor **702** (and antenna **702***a*) that is coupled to a controller subsystem **704** such as described herein. The GPS sensor **702** serves the functions of one or more of the sensors **14**, FIG. **1**A. As known in the art, GPS receivers such as the sensor **702** provide absolute position in terms of altitude and earth location. By monitoring the signal from the GPS sensor **702**, speed, height and loft time are directly determined. For example, at each signal measurement, a difference is calculated to determine movement of the vehicle **700**; and that difference is integrated to determine absolute height off of the ground, distance traveled, speed (i.e., the distance traveled per sample period), and airtime. FIG. **25** thus illustrates a sensing unit which includes a GPS sensor **702** (operating as one or more of airtime, speed and drop distance sensors) and a controller subsystem **704**, such as the subsystem **12** of FIG. **1**A.

FIG. **47** illustrates one GPS-based system of the invention, including a GPS receiver **1400** with an antenna **1401**. The antenna is small because GPS operates at an extremely high frequency. The antenna **1401** may be mounted with a backback, of the user, containing the GPS receiver. The receiver is powered by a battery back **1402** which also powers a microprocessor **1403**. The microprocessor **1403** takes data from the GPS receiver **1400** and stores it as a position in random access memory RAM **1404**. The data is preprocessed according to a program stored in Read Only Memory ROM **1405**. The processor ROM **1405** can also contain stored maps with which to determine skier performance, allowing the program to become an expert system to, for example, identify trail features or problems. The user interfaces with the microprocessor **1403** via the peripheral interface **1406**. Examples of a peripheral interface include keyboards, displays, etc. A panic button can be included with the interface **1406** to inform a base station of trouble. The warning is sent with exact location so that the rescue team (e.g., the ski patrol) can easily find the stricken person (e.g., skier).

An enhancement to the above system utilizes differential GPS. Differential GPS makes use of the property that a fixed receiver in a known position can be used in conjunction with a non-stationary GPS receiver with the effect that many of the large errors are rejected. The result is a more accurate position solution for the moving receiver. In the preferred embodiment, a user carries the reciever **1400** and the base station houses the differential model, as known in the art.

For skiing and other similar sports, the user is given a GPS receiver and an RF link (e.g., a transmit section **22**, FIG. **1**A) so that a central computer at the base station lodge (e.g., station **70**, FIG. **1**B) knows the location of every user. Such locations may then be broadcast to the skier for display in a set of goggles using a heads-up display.

FIG. **26** shows a strain gauge **720** connected to a controller subsystem **722**, such as the subsystem **12** of FIG. **1**A. In the illustrated embodiment, the sport vehicle is a ski or snowboard **724**. Those skilled in the art understand that strain gauges can detect stress associated with the surface that the gauge is mounted upon. The gauge **720** thus senses when there is little or no stress on the snowboard **724**, such as when the snowboard **724** is in the "air"; and the subsystem **722** then determines airtime from that relatively quiescent period. FIG. **26** thus illustrates a sensing unit which includes a strain gauge **720** as an airtime sensor and a controller subsystem **722**. The sensing unit **720**/**722** can further provide factors such as power, by utilizing the signal generated by the strain gauge **720** as a measure of the punishment that the user applies to the vehicle **724**. Accordingly, the gauge **720** can operate as a power sensor in addition to an airtime sensor.

In an alternative embodiment, the element **720** is a temperature gauge that senses the change in temperature when the ski **724** leaves the ground. This change of temperature is monitored for duration until it again returns to "in contact" temperature. This duration is then equated to "airtime" or some calibrated equivalent (due to thermal impedance). Note that the impedance of air is different from snow; and hence that change can also be measured to determine airtime.

In an alternative embodiment, the element **720** is a load cell, known in the art, such as a strain gauge bridge, or other force-sensing means, such as force sensing resistors (FSRs). A unit incorporating such elements operates as described above.

FIG. **27** shows one speed, airtime and power sensing unit **740**, constructed according to the teachings herein, and mounted to a sporting vehicle such as the ski **741**. The unit **740** has an RF transmitter **742** (e.g., similar to section **22**, FIG. **1**A) to communicate signals from the unit **740** to a watch **744** worn by the user (not shown). In this manner, the user can look at the watch **744** (nearly during some sporting activities) to monitor performance data in near-real time. A small watch display **744***a* and internal memory **744***b* provide both display and storage for future review.

The devices for measuring speed, airtime, drop distance and power as described herein can oftentimes be placed within another component such as a user's watch or a ski pole. For example, the power system **620** of FIG. **21** is readily placed within a watch such as watch **744**, and without the unit **740**, since power integration can be done from almost anywhere connected to the moving user. Likewise, airtime measurement through the absence of a spectrum, such as shown in FIG. **6**, can also be done in a watch or a ski pole. Speed measurements, however, are much more difficult if not impossible to do at these locations because of the lack of certainty of the direction of movement. However, with the increased performance and size reductions of guidance systems with accelerometers (see FIGS. **9** and **10**), even this can be done.

FIG. **28** illustrates one drop distance sensing unit **800** for determining drop distance from a skier or snowboarder **801** (or other sport enthusiast, e.g., a mountain biker, skateboarder, roller-blader, etc.). The unit **800** includes an antenna **802** and a GPS receiver **804**. The GPS receiver

operates such as known in the art. Although the unit **800** is shown on the skier's waist **806**, the unit **800** can also be coupled to the snowboard **808** or it can be constructed integrally with the user's watch **810**. In the embodiment shown, the unit **800** can include a second antenna **812** (or other data transfer mechanism, including IR techniques) which communicates with the watch **810** so as to send performance data thereto.

FIG. **29** illustrates a block diagram of the drop distance sensing unit **800**, including further detail therein. A microprocessor **809** connects with the GPS receiver **804** to process GPS data. In particular, the GPS data is known to include three dimensional data including height off the earth's surface. The processor **809** thus processes the data at predetermined intervals, e.g., about 1 second or less, to determine the change of height from the last measurement. Accordingly, when airtime is determined, according to the teachings herein, the device **800** also determines drop distance for that interval. The drop distance information is stored in internal memory **812** so that it can be retrieved by the user or transmitted to a data unit such as the watch **810**. Records of drop distance can also be stored within the memory **812** such that a peak drop distance and a series of drop distances can be stored and retrieved by the user at a later time. The device **800** also includes a battery **814** and other interconnections and processing electronics (not shown) to operate the device **800** and to provide drop distance data, as described in connection with FIGS. **1**A and **1**B. A data transmit section **816** (e.g., the section **22**, FIG. **1**A) transmits data via an antenna **816***a* (or other technique), as desired, to the watch **810** or to other displays or data units, or to the base station, such as discussed herein.

Evaluation System

The sensing units described herein can be complex, and require lengthy evaluation to provide a robust system. To evaluate such units, a data evaluation system was developed, as described next. The data evaluation system provides a flexible data recording unit that has applicability in several circumstances where large amounts of data are collected in adverse and remote environments.

As shown in FIG. **30**, the Data Acquisition system **899** includes five main components on a data acquisition/playboack board:

Data Recorder/Player **900**

PC Interface **902**

Analogue Motherboard **904**

Analogue Input Interface Boards **906**

Analogue Output Interface Boards **908** To record information, the Data Recorder/Player board and Analogue Mother Board **900**, populated with the required Analogue Input Interface Boards, are placed in a box, connected by a small back plane. Once the data has been recorded, the Data Recorder/Playback Board **900** is removed from the box, and connected to the PC Interface board. The PC then controls the downloading of data to file.

The overall size of the Recording Package is 2½" wide, 5½" deep, and 4½" tall. All sensors are external, and may or may not be housed in boxes.

The data recorder and player **900**, FIG. **31**, is the heart of the system **899**. It includes a block of memory **910** for holding the sampled data values, controlling logic **912**, and interfaces **914***a*, **914***b*.

The Data Recorder/Player Board (DRPB) **900** always handles 32 bits of data. It is configured to either Record or Playback the data at a rate of one word (32 bits) every 15.6·S (approx. 64 KHz). The control interface **914** provides signal to interface to the PC Interface board and Analogue Mother Board.

The Control Logic **912** also provides refresh cycles for the dynamic RAMs. The Memory **910** consists of any 72-pin SIMM modules. These must be matched in the same manner as when used in a PC. (i.e. one 8 Mb cannot be mixed with one 16 Mb module.) This provides a limit of 512 Mb of RAM, which will give a maximum of 134217728 samples. This is equivalent to 34 minutes and 53 seconds. However, the larger SIMM's are physically taller than standard-sized devices and are very expensive. In practical terms, two 64 Mb SIMMs (128 Mb) provide 8 minutes and 43 seconds of data recording at 64 KHz.

The recorder can be paused during testing. Longer recording periods make annotation of the data (and data handling) more difficult. If this limit is acceptable, two of the SIMMs can be removed from their sockets in the DRPB **900**, to reduce its size.

The DRPB **900** has its own NiCAD battery (attached to the board for safety) such that the board can be removed from the box on the ski and taken to the PC for downloading.

PC Interface

The PC Interface **902** allows the DRPB **900** to be connected to the parallel port of a PC. It requires a bidirectional port (EPP). The design uses two MACH 210s, and allows the PC to control the upload and download process completely. The current download/upload rate achieved is 8 Mbytes/minute which is generally acceptable.

Analogue Mother Board

The Analogue Mother Board (AMB) **904** controls the sampling of the data on the Analogue Input Interface boards (AIIBs) **906**. It presents the Data Recorder/Player **900** with 32 bits of data for each recording period. Data from the AIIBs **906** are multiplexed. The programming of the AMB **904** determines the sampling rates and position of the data in the 32-bit word for the AIIBs **906**. If a different combination of AIIBs is required, the AMB **904** is reprogrammed. Therefore, the control logic on the AMB **904** is held in an AMD MACH 211 which is a flash device, programmable whilst still on the board using a JTAG connector (thus a notebook PC with a parallel port can reconfigure the board.)

As shown in FIG. **32**, the Control Logic **912** inserts the real time clock **916** value into one channel (probably an 8 KHz channel). This will simply be a counter counting at a minimum frequency of 8 KHz, which allows the analyzing software to detect when the recording was paused.

Analogue Input Interface Boards

The Analogue Input Interface boards **906** are small daughter boards which plug in vertically to the Analogue Mother Board **904** (i.e., into the slots **918**, FIG. **32**). The Mother board **904** will allow 8 of these boards to be connected at once. This design allows an interface board to suit the signal to be recorded. This is then combined with other interface boards to allow recording of a combination of signals, as required.

As shown in FIG. **33**, the A/D converter **920** is a serial device; thus reducing the number of pins required and the level of board complexity. The board space available for Analogue Signal Conditioning **922** is limited. The Pressure Sensor AIIB **906** (i.e., that board incorporating a drop distance sensor, discussed above), shown schematically in FIGS. **34**A and **34**B, provides an example of the size limitations, and the complexity level limitations on the circuitry. Specifically, the circuit **930** of FIGS. **34**A and **34**B is an example of an AIIB **906** for a SenSym Pressure sensor. It uses four op-amps and various capacitors and resistors to provide the required signal conditioning.

FIG. **35** exemplifies a layout board **940** for circuit **930**, FIGS. **34**A and **34**B, used to connect to the AMB **904**. The height of the board **940** is 0.9", and the width is approximately 2½ inches.

Preferably, one AIIB **906** incorporates a Voice Annotation Channel, so that data can be annotated by voice concurrently with data acquisition. The AIIB **906** for the Voice annotation channel can have a simple tone generator connected to an external button that is operated by the skier. This will inject a tone when pressed onto the voice channel to allow marking in the annotation of special places.

The analog interface boards **908** are similar to the AIIBs, but have a DAC rather than ADC components. They allow the system to generate signals as recorded from the sensors. Thus a new board design can be tested on a virtual slope on the bench.

The data acquisition system thus permits the capture of data, real time, to evaluate sensors such as altimeters used in a drop distance sensor, described herein. Two exemplary altimeters, for example, are the SenSym SCX**15**AN Pressure sensor and the SenSym SCX**30**AN Pressure sensor.

As discussed herein, many embodiments of the invention utilize piezo foils, such as within airtime, power, and speed sensors. These foils for example include those foils from AMP Sensors, such as the AMP DTO-028K foil or the AMP LDTI-028K foil. Similarly, an accelerometer like the AMP ACH-01-03 accelerometer can be used to generate vibration data (this sensor was in fact used to collect the data of FIG. **6**).

Another pressure-based drop distance sensing unit **1000** of the invention is shown in the block diagram of FIG. **36**. The unit **1000** includes a pressure sensor **1002**, as described above, and is used to determine altitude. GPS, as described above, may also be used in connection with the unit **1000**. The pressure sensor altimeter **1002** is used to determine ambient pressure. As altitude changes, so does the pressure. The pressure sensor **1002** indicates pressure by an analog voltage. That voltage is conditioned by the conditioning electronics **1004** so that the output data is filtered, well-behaved and has an appropriate scale factor. The electronics **1004** also typically filter the signal to prevent aliasing when sampled by the controller subsystem **1006**. After conditioning, the data is converted to a digital word by AVD electronics **1008** for the microprocessor **1006**. The data is thus represented as an eight, twelve or sixteen bit word. It is then read by the microprocessor **1006** and is interpreted as altitude.

As illustrated in FIG. **37**, the processor **1006** includes resident software that schedules the reading of data and its manipulation thereof. The core shell of software is the Real Time Operating System **1010**. This may be purchased off the shelf by companies such as Ready Systems. These programs process tasks according to user selected priorities so that every task is executed within a software control frame. The part of the software that reads the pressure sensor output (from the A/D **1008**') is called the Input Output Driver or I/O Driver **1012**. This program may be executed on a regular basis automatically or may be the result of an interrupt. In the event of an Interrupt, the processor **1006** automatically launches an interrupt service routine or ISR. The purpose of an ISR and I/O Driver **1012** is to get the data into the processor's memory so that an application program may use the information. Filtered by the **110** Data **1013**, the application **1014** is the software that interprets the data, such as to determine altitude **1016**. The data may then be stored in memory for other applications **1014** to operate on the data, use it for decision making, or pass it on to other I/O Drivers for output.

The processing of altimeter data from the pressure sensor **1002** is a matter of eliminating the low and high frequency noise from the measurement. In this embodiment, this is done by cascading a high pass with a low pass filter. The Low pass filter is selected by determining the sampling rate and ensuring that the highest frequency component in the signal passed through the filter is half the sampling rate, known as the Nyquist criteria. Frequencies that are higher than half the sampling rate will result in aliasing. This means that the spectrum will be distorted and the original signal is not accurately reconstructed.

The high frequency component of the cascaded high pass, low pass filter is thus selected by the maximum rate of descent the skier will travel. The higher the low pass filter, the faster the altimeter tracks the skier. Since the skier is limited by inertia and kinematics (the basic laws of motion) the rate of altimeter change is not high by signal processing standards. If a skier travels at 100 ft per second, this is about 68 miles per hour, which means that if they move along true vertical their altitude would be changing at 100 ft/sec. If the change in output voltage goes from DC to 100 Hz, then the low pass filter also needs to pass the 100 Hz.

The low frequency of the high pass, low pass filter is related to how slow the signal changes. In this case it is limited by the frequency response of the altimeter and the slow changes associated with atmospheric fluxuations.

FIG. **38** shows a "shock" or "G" or power digital watch **1020** constructed according to the invention. As in normal watches, a band **1022** secures the watch **1020** on a user's wrist so that the watch face **1024** can be viewed. A crystal **1026** provides the primary window through which to view data such as time on the display **1028**. A user can adjust the time through a knob such as knob **1030**.

The watch **1020** also holds a power sensing unit **1032**, as described herein. The unit **1032** utilizes either its own microprocessor (e.g., a controller subsystem), or augments the existing microprocessor within the watch **1020** to provide like capability. The unit **1032** is controlled by interface buttons **1034***a,* **1034***b,* such as to provide ON/OFF capability and to display power performance data instead of time on the display **1028**.

The watch **1020** of FIG. **38** thus provides "power" without the additional mounting of a sensing unit on a vehicle. Rather, this embodiment takes advantage of the fact that many sports include waving and movement of the user's arm (e.g., tennis and volley-ball); and thus power is determined through the techniques herein to inform the user of this performance data, through the watch **1020**.

FIG. **39** illustrates another watch system **1040** for measuring power and informing a user of that power. As above, the watch **1042** is made to mount over the user's wrist. The watch **1040** functions as a normal watch, including, for example, a display **1044** to tell the user time (e.g., "10:42 PM"). Another portion of the watch includes a power sensing unit **1045**, a processor **1048**, force sensing element **1050** (e.g., a power sensor such as an accelerometer, or alternatively a microphone) and circuitry (not shown) to drive a display that informs the user of power. The processor **1048** processes the force data from the sensor **1050** and sends a signal to the display **1052** so that the user can see the power performance data (e.g., "50 G's"). The units on the display **1052** need not be actual units, such as G's, but relative units are acceptable to calibrate to other users and to repeated activity by the same user. A control knob **1054** provides access to the unit **1045** in a manner similar to the user interface buttons of FIGS. **1**A and **1**B.

Those skilled in the art should appreciate that an altimeter can also be placed in the watch **1040** so that, as above, the

user is informed of drop distance. The button **1054** can also enable control of the unit **1045** so that one of drop distance, or power, is displayed on the display **1052**. This dual drop distance and-power watch embodiment is described in more detail in FIG. **40**.

FIG. **40** illustrates one block diagram of a power/pressure watch system **1060**, constructed according to the invention. An altitude or pressure sensor **1062** as discussed above is conditioned by conditioning electronics **1064** which filter and scale the sensor's output. The data is then converted to digital by the Analog to Digital electronics **1076**. The data is then read by the microprocessor **1066**, wherein the data is processed by software and interpreted as altitude. The watch system **1060** includes a keyboard interface **1068** to set the time and the different performance data modes, as commanded by the user. Time is displayed on the watch display **1070**, as normal.

System **1060** can further include an accelerometer **1072** which senses vibration and shock, as described herein, and which provides a voltage that is proportional to acceleration. This output is then conditioned by the conditioning electronics **1074** for scaling and filtering (such as through a combination of low pass and high pass filtering): the high frequencies limit is selected by anti-aliasing requirements while the low frequency limit is determined by low frequency noise rejection. The data is then sampled by the analog to digital electronics **1078** and read into the microprocessor **1066**.

Drop distances may thus be determined by various sensors, including accelerometers, differential Global Positioning System (GPS) receivers, and pressure sensors, as discussed above. These sensors may be used in conjunction with airtime logic—which for example senses the abrupt change in the vibratory noise floor, potentially indicating the skier leaving contact with the ground—to give useful drop distances corresponding to airtime.

Accelerometers can also be used to determine airtime and the onset of free-fall. By using accelerometers to look at the ski vibration, airtime can be determined by absence of the vibrating spectrum, suggesting that the skis are no longer rubbing along the ground. Generally, this corresponds to the high frequency component to the acceleration signal. Accelerometers in the prior art also measure the acceleration due to gravity, which tends to change slowly. When a body free-falls, the force on the seismic mass associated with the accelerometer is zero because the seismic mass is no longer restrained. An accelerometer suite that measures acceleration in three translational directions will sum to zero in a free-fall. When the gravity acceleration returns, noted by the return of the low frequency acceleration floor, as well as by the return of the high frequency noise floor from skis rubbing on the ground, the system can determine the duration of free-fall—i.e., drop distance. The minimum distance d traveled in this free-fall along the axis of gravity known as true vertical may be determined by the formula $d=v_o t+\frac{1}{2}gt^2$, where d is distance traveled downward, g is acceleration due to gravity 32 ft/sec^{2,,}, v_o is the initial velocity downward, and t is the number of seconds of free-fall. If the initial velocity v_o is not known then the minimum distance d_{min} can be determined by the rest of the equation $d_{min}=\frac{1}{2}gt^2$.

FIG. **9** showed the hardware block diagram for an accelerometer suite **207** capable of determining loft and free fall. The diagram included three linear accelerometers whose output are conditioned by electronics that strengthen and filter the signals. The output of the conditioning electronics is then fed into interface electronics that convert the signals from analog to digital.

FIG. **41** illustrates a top view of one preferred system **1100** for determining power and/or airtime (and/or speed discussed in more detail below). The system **1100** includes a sensing unit **1100***a* with housing **1102** mounted to a snowboard **1104** (alternatively, the system **1100** can be mounted to a ski, windsurfing board, bike, etc.) and a data unit **1100***b*, such as a data collection watch **1112** (such as the datawatch by Timex®). The housing **1102** forms an enclosure for the sensor, here illustrated as a piezo strip **1108** such as made by AMP Sensors, in Pennsylvania. The strip **1108** connects with the housing **1102** to measure sound within the box **1102**. The box **1102** thus serves to amplify the sound heard through the ski **1104**, and also compresses air within the box **1102** in a manner that is indicative of the force experienced by the box and thus the ski **1104**. Accordingly, the strip **1108** measures not only sound, but a force-related factor that is used to determine power. In this manner, a microphone (e.g., the strip **1108**) is suitable to measure both airtime and power. Further, by monitoring the pitch or signal strength of the sound within the box, a speed can be correlated with the sound. Accordingly, by a single microphone such as a piezo strip **1108**, airtime, power and speed (or at least motion) are provided. A controller subsystem **1110** connects to the strip **1108** to process transducer data; and that processed data is transferred, for example, to the watch **1112** worn by the user by way of infrared energy signals from a diode/detector pair **1114***a*/*b* or other similar optical data transfer devices. The units **1100***a* and **1100***b* preferably permit communication between units, either direction.

Other transducers, e.g., an accelerometer or altimeter **1116** can also be placed in the box **1102** for processing and transfer to the user's watch **1112**. The box **1102** is preferably sealed against environmental effects so as to protect the electronics therein. It is thus similar to the housing **32** of FIG. **1A**. Because of the watch **1112**, there is no separate need for a display in the sensing unit **1100***a*. A battery (not shown) powers the unit **1100***a*.

Another microphone such as the strip **1108***a* can also be included within the unit **1100***a* to provide additional speed sensing capability, as described below.

FIG. **42** illustrates that at the onset of airtime, the controller subsystem can trigger a drop distance calculation. Specifically, at an airtime sensed by an airtime sensing unit, a drop distance sensor—e.g., a GPS receiver, altimiter, or accelerometer—is polled to determine the change in vertical direction. In the event of a vertical drop, the first derivative in the z direction (True Vertical) should be a maximum. The signal flow diagram of FIG. **42** illustrates this logic:

Specifically, loft condition is first determined by the airtime sensor of block **1200**. This data state is determined, for example, by the sudden absence of noise in the ski, causing an abrupt change in the near noise floor. The next data state is characterized by blocks **1202**, **1204** and **1203**. In state **1202** an altimeter is polled to determine if altitude is changing at a high rate, such as a rate associated with free fall. If so, the drop distance data is accumulated for the duration of the high free fall rate and the airtime. The state **1204** is similar to that of **1202**, except for GPS receiver signals. In state **1204**, GPS data is evaluated for a high rate of change in the Z direction. If there is a high free fall rate, the data is accumulated for as long as both the high rate and loft time are valid. The state **1203** corresponds to a data state using accelerometer data evaluation for airtime. As before, if the user is in free fall, the accelerometer does not experience an acceleration due to gravity. During this condition, drop distance data is accumulated during the

airtime to determine vertical drop. The end of airtime signifies the end of the vertical drop, and state **1206** is returned. The distance of the drop is provided by the accumulation of the altimeter change, the change in GPS vertical height, or the duration of the accelerometer free fall and the laws of physics, as described herein.

FIGS. **43** and **44** provide vibrational data corresponding to accelerometer data at less than 2 mph, FIG. **43**, and greater than 15–20 mph, FIG. **44**. The data acquisition system was the same as for the data of FIG. **6**. As a ski moves faster over the surface of the snow, more of the energy from the spectrum is associated with the higher frequency components. Specifically, it is readily seen that the FIG. **44** has more power at higher frequency components. By segmenting and. "binning" these frequencies, energy is isolated to such frequencies so that it can be compared to calibrated speed data at those frequencies. This is described below.

Note first that a microphone can provide basically the same information as the accelerometer above (that is, the data of FIGS. **43** and **44** appear similar to microphone data taken within a unit such as described in connection with FIG. **41**), at least in frequency and relative magnitudes. Microphones are cheaper than accelerometers, and thus they are preferred for production reasons.

With regard to FIG. **45**, a force measuring sensor such as a microphone or accelerometer generates a voltage signal indicative of the spectra such as within FIGS. **43** and **44**. This voltage **1300** is passed through an array of temporal filters which "bin" the appropriate results, according to frequency, such as shown in block **1302**. The temporal binning of block **1302** can include a series of analog networks that pass specific frequencies only. For each frequency bin, the data is processed by modules **1304**: the data is first rectified at block **1306** and a capacitor **1308** charges over the time constant of an A/D **1310** to integrate the signal of those frequencies; whereinafter the switch **1312** discharges in time for the next sample. The output is then summed according to frequency, for subsequent summing.

Those skilled in the art should appreciate that the process of FIG. **45** can be done within a DSP, wherein the steps of blocks **1302** and **1304** are accomplished through software modules. Accordingly, the unit **10** of FIG. **1**A can thus simply process the data **1300** within the microprocessor **12***a*, or the logic functionality can be maintained in analog such as within the logic **12***c* or within other electronics not shown.

In any event, the various frequencies are then binned. For example, the low frequency 0–1 Hz is binned into the first bin, the 1–10 HZ frequencies are in the next, and so on (similar to the equalizer light on the home stereo system). For each time T (set by the A/D or other time—which is preferably at a reasonably fast rate, e.g., 100 Hz), the power in each frequency is integrated and assigned an integer value, such as: a typical value within 0–1 Hz is 1, a typical value within 1–10 Hz is 1, and so on. These values are integrated at a user selected interval (i.e., the power period). Further, the power values are preferably standardized to every user, so if you have 5 seconds of peak power activity, that will be saved—this number should be changeable to 10 seconds or even 1–5 minutes. A table created by this technique might appear as in Table I:

Table 1: Typical Frequency Binning, for Speed, Airtime and/or Power

Frequency	0–1 Hz	1–10 Hz	10–100 Hz	100–100 Hz
A/D Sample 1	1	.5	1	.1
A/D Sample 2	2	1	2	.3
A/D Sample 3	1	2	1	.4
A/D Sample 4	2	1	3	.3
. . .	. . .	. . .	. . .	. . .
A/D Sample n	X1	X2	X3	X4
SUM over time 1-n	6+. . .+X1	4.5+. . .+X2	7+. . .+X3	1.1+. . .+X4

With time 1–n corresponding to the power period, power values are functionally dependent upon the SUM values, either within some or all of the bins. Note that the bins of FIG. **45** and Table 1 are chosen for illustrative purposes only; and that other bin sizes and ranges can be used in accord with the invention.

Fortunately speed can also be determined through these SUMs (although the summing "period" should be much faster than for power, and should typically be less than one second or even one tenth of a second). As noted above, there is a lot more high frequency content at faster speeds, FIG. **44**, as compared to lower frequency content, FIG. **43**. So, speed can also be correlated to such binned data, after obtaining a sufficient database of samples (preferably corresponding to the particular vehicle). Further, not all binning sections need to be used in that correlation. For example, one of the binning sections might readily produce a four factor increase of power for 15 mph as compared to 3 mph; and such increase is repeatable to correlated data.

Again, data for speed should not be integrated over time 1–n; but rather should be assessed for each sample or groupings of sample (e.g., an average of samples over a 1/10ths period). If for example a group of samples over any one second specify 15 mph data, then the speed sensing unit should report "15 mph event recorded". If only one sample has this value, then it should be discarded since—relative to 1/10s intervals—the speed is substantially "steady state". That is, an average of ten speed summations over one second should, on average, all report the same 15 mph event.

The data of Table 1 can be also used for power. In one preferred aspect, power is a factor which is scaled to the third derivative of vertical distance moved with respect to time, essentially the change of acceleration (in the perpendicular axis to the ski or snowboard, if desired, or some other orientation) as a function of time. Specifically, power can be measured as:

$$Power \therefore \frac{\partial^3 x}{\partial t} \approx \frac{\partial A}{\partial t}$$

where x is distance moved in the selected direction (here, vertical to the ski face), and A is acceleration in the same axis.

In summary, selectable integral periods for power (e.g., 5 seconds, or 5 minutes, or other user-selected power period), and for speed (e.g., less than one second) are preferable, in accord with the invention. Note also that the filter bank **1302** is preferably adjustable and not limited to 0–1 Hz, 1–10 Hz, 10–50 Hz, and 50–250 Hz.

FIG. **46** shows illustrates the capture of data **1300'**, such as digital or analog data from an accelerometer, by a DSP **1304'** within a sensing unit of the invention. The DSP converts data **1300'** to power by one of several disclosed algorithms: by evaluating one or more frequency ranges of the data **1300'**, by determining vertical motion relative to a

face of the vehicle and assessing that motion with an exponential factor for a selected time period, or by determining a vertical velocity relative to a face of the vehicle and assessing that velocity with an exponential factor.

Note also that airtime can also be isolated from the data of Table 1. For airtime, the low frequency bins of 0–1 Hz and especially 1–10 Hz will be very small; and the controller subsystem will immediately identify this loss of power, in these binned frequencies. Since airtime can be less than one second, the moving averages which integrate the data should be substantially less than the airtime minimum. Essentially, the airtime binning is a one-dimensional convolution between a rect function (defining the period) and the data of the lower frequency bins. A similar convolution can be applied to determine factors such as power and speed, except that the rect size is larger and different bins are likely used.

Power can be determined in other ways too, in accord with the invention. Specifically, power can be defined as the rate at which energy E is expended. Power and work are related by:

$$P=dE/dt$$

By having an estimate of the energy associated with the user's movement, over time, then an estimate is also available for the power expended by the user. The kinetic energy of a simple mass is expressed by:

$$E=\tfrac{1}{2}\,m\,V^2$$

Thus energy is proportional to velocity squared. Velocity, or speed, is determined in several ways herein. For example, velocity can be determined from an accelerometer by integrating acceleration over time after subtracting the 1 g acceleration of gravity. In a sampled system, velocity at any point in time (at interval Δt) is equal to:

$$V\approx\Sigma A\Delta t$$

where A is the measured acceleration with the 1 g acceleration removed. Velocity is squared to obtain a quantity proportional to the kinetic energy:

$$E=V^2$$

The total power over some finite time interval N is thus proportional to:

$$P\approx\frac{1}{(N-1)\Delta t}\sum_{i=1}^{N}(V_i^2-V_{i-1}^2)$$

If for example the accelerometer is attached to a ski or snowboard, then a significant portion of the measured acceleration may be due to the oscillations of the ski/board at its resonant frequencies. These oscillation are the ski/board's response to its dynamic loading environment and may not be indicative of the power that the skier/boarder experiences. It is therefore worthwhile to process the accelerometer signal so as to reduce the contribution made by ski/board vibration to the power measurement. The resonant frequencies of the board and skis are significantly higher than the dynamics that the skier's body experiences. Thus, the contribution of the ski/board resonant response to the accelerometer measurement can be reduced by applying a low pass temporal filter to the data prior to integration.

One way of developing an algorithm to deal with extracting speed from acceleration data (or microphone data or other force sensing output) is through a neural network. A neural algorithm is one that is developed through a learning process, including force sensing data from the sensor and speed data correlated during test. The neural algorithm builds a network that will process the data. It starts off by using a small number of samples and a small number of stages. The output is derived by weighting factors on the samples and added together. The output becomes a weighted average of the inputs, i.e., a multiple stage moving average filter. The output is then compared with the speed waveform and tested to see how well it produces the correct result. If the test fails, the number of samples is then increased or the number of stages is increased, or both. FIG. **48** illustrates an exemplary neural network **1498** windowing down acceleration data **1500** to achieve the correlated speed **1502**. Specifically, FIG. **48** shows the construction of a network **1498** where four samples 1,2,3,4 are fed into four stages **1504**, and where each sample is multiplied by a weighting factor or gain. The network **1498** is then tested to see if input data produces speed data. If not the number of samples used as input are increased as are the number of stages. At each network the relative gains are also changed to see if that will produce the required result.

Other Techniques for Speed Estimation

In accord with the invention, speed can also be determined based upon the characteristics of the resulting friction-induced noise spectra. When the vehicle—be it a ski, snowboard, waterski, etc.—passes over the surface, the spectra will have a bandwidth content that increases with vehicle speed in a deterministic fashion (if one can assumes that the spatial spectral content of the surface is invariant with respect to time and location). As such, the following describes a two-sensor technique for estimating delay times of transport processes. The unit **1102** of FIG. **41** includes two such sensors—i.e., the two piezo strips **1108**—which are suitable for such process measurements.

Consider the system **1600** depicted in FIG. **49**. A ski or snowboard **1602** is instrumented with two vibration sensors **1604** such as described above. These sensors **1604** are attached a distance "D" apart. The ski moves at a velocity "V" over the snow surface **1606**. The front-most sensor **1604***a* provides a vibrational output $s_2(t)$, a typical example of which is plotted in FIG. **50**. The rear-most sensor **1604***b* provides a vibrational output $s_1(t)$, plotted in FIG. **51**. Assuming that the characteristics of the snow surface **1606** which induce the response $s_2(t)$ do not change significantly as the ski **1602** passes through a distance D, and that the speed of the ski **1602** does not vary significantly over that time, then $s_1(t)$ will essentially be a replica of $s_2(t)$, delayed by an amount of time τ. This is seen by considering the feature of the vibration spectra at time t_0 in FIG. **50**. This trace can be conceived of as "sliding" along the time axis t to produce FIG. **51**, except now the aforementioned feature of the time trace appears at time $t_0+\tau$.

If one estimates the time delay t accurately, then one simply uses the relationship DISTANCE=VELOCITY× TIME to infer the velocity V:

$$v=\frac{D}{\tau}. \tag{1}$$

This same methodology has been applied in measuring the characteristic propagation times (and thence speeds) of spatial features in turbulent flow over wings and other surfaces.

Since the vibrational input can be thought of in a local frame (the "sensor frame") as a random process, one can use conventional statistical means to infer the delay time t, and

thence V. Typically, this is done using correlation functions. Define the cross correlation function $R_{12}(\tau)$ as

$$R_{12}(\tau) = \lim_{T\to\infty} \frac{1}{T}\int_0^T s_1(t)s_2(t+\tau)\,dt \tag{2}$$

A typical cross correlation function is plotted in FIG. **52** (note that this cross correlation function depicts a system with two characteristic time delays, t_1 and t_2).

The most straightforward interpretations of cross correlation functions are in the context of propagation problems. For non-dispersive signal propagation of the type considered here, even in the presence of additive noise associated with the sensors, one can show that

$$R_{12}(\tau) = R_{22}\left(\tau - \frac{D}{V}\right), \tag{3}$$

where R_{22} is the autocorrelation of $s_2(t)$. A typical autocorrelation function is plotted in FIG. **53**. Thus, the cross correlation of equation (2) will look like the autocorrelation of $s_2(t)$ shifted by the amount D/V along the correlation time axis. Using this fact, one can readily infer the delay time τ by searching for the peak magnitude of the cross correlation function (whose construction is described below), and then computing the velocity V using equation (1) since D is known. Thus, a two-sensor system will permit the measurement of the speed V independent of the spatial spectral content of the snow surface.

Note that the separation D is shown with large separation for purposes of illustration; when in fact that distance will typically reflect a small separation such as illustrated by the separation of the sensors **1108** of FIG. **41**.

There are a few practical considerations to be kept in mind when computing R_{12}, and in interpreting its characteristics. First, unlike autocorrelations, extraneous noise at the sensors **1604***a*, **1604***b* only reduces the relative contributions of individual correlation peaks and increases the random error in the measurement; but it does not distort or bias the result, hence the time delay measured will be the true time delay. Secondly, one should determine a priori if there are any secondary propagation paths for the vibrational signal that first enters sensor **1604***a* to reach sensor **1604***b* before the ski slides over the snow the distance D.

This may occur in skis or snowboards, as is shown in FIG. **54**. The board/ski can support bending modes via flexing, which have a characteristic (slowest) propagation speed "C_B". Also, the material within the board can support the equivalent of acoustic (sound) waves within it, with characteristic propagation speed "C_P". This would lead to a cross correlation having two correlation peaks, each of which corresponds to the delay time associated with transmitting the vibrational input at **1604***a* to sensor **1604***b* via bending and compressional waves, respectively. If these wave speeds are comparable with the skier's speed V, then one will not distinguish skiing speed from the natural vibrational response of the board/ski **1602**. Fortunately, these vibrational wave speeds should be faster than the skier's speed, and thus appear at a much shorter delay time on the correlation plot: the characteristic wave speed in aluminum is 20,664 feet/sec, in ice about 10,496 feet/sec, and in rubber about 7872 feet/sec for compressional waves. The bending wave speed will typically be slower, but can only be computed for well known geometries and material compositions, and is usually easier to measure in the lab beforehand. If there should ever be a problem in measuring the speed V via the cross correlation of equation (2), it will likely be attributable to this. Should that problem occur, one can readily get around it by changing the sensor spacing D, which would thence change τ.

The cross correlation is computed from digital samples via

$$R_{12}(r\Delta t) = \frac{1}{N-r}\sum_{n=1}^{N-r} s_{2,n}s_{1,n+r}, \tag{4}$$

where r defines the sample lag number at which the cross correlation is being computed, N the number of sample points in the time records, and the subscript n denotes the n-th element in the time record, and Δt is the sampling rate of the system. This function can be normalized to have unit magnitude by dividing through by the square roots of the zero-delay auto correlations of the signals s_1 and s_2 (e.g., the variances of these signals):

$$\rho(r\Delta t) = \frac{R_{12}(r\Delta t)}{\sqrt{R_1(0)}\sqrt{R_2(0)}} \tag{5}$$

$$R_1 = \frac{1}{N}\sum_{n=1}^{N}(s_{1,n})^2; \quad R_2 = \frac{1}{N}\sum_{n=1}^{N}(s_{2,n})^2. \tag{6}$$

This simplifies the setting of thresholds for selecting the delay time τ corresponding to the skier speed V. Also, one can restrict the set of lag numbers r if you already have some idea of the expected delays, given the speeds you expect to encounter skiing or boarding (or other sports, since these techniques apply to other sports and are discussed in the context of skiing for illustrative purposes only).

The means to test this measurement and processing methodology is to mount sensors on the board or ski, and first measure the correlation function of equation (4) for all r. Then, compute the speed V per equation (1), and compare it to that measured with a truth sensor, such as a police radar gun, or a simple wind anemometer. Also, compute the standard cross spectra function as found on most any spectrum analyzer to see if the phase of the cross spectra denotes a pure lag (a progressive phase shift when unwrapped) over a range of frequencies (as would be expected here). This method though requires that you compute two FFTs, do a complex multiplication, and then compute the phase via an arctangent, all in real-time. If you see several delay times in the cross correlation, as might be found for a particularly floppy set of skis with a very, very slow bending wave speed, move the sensors and see if these peaks shift so as to separate out the propagation delay due to skiing. The only limitation here is the spatial coherence length of the snow/board interface, which needs to be observed experimentally.

Regarding expected delays, consider the Table 2 of delay times (in msec) for two separations: D=1.5 ft (as might be found in a foot-to-foot spacing on a board), and D=4 ft. The delay **T1** corresponds to D=1.5 ft, and **T2** corresponds to D=4 ft.

TABLE 2

	Delay processing times	
speed	T1 (msec)	T2 (msec)
5	204.5	545
10	102.2	272.7

TABLE 2-continued

	Delay processing times	
speed	T1 (msec)	T2 (msec)
15	68.2	181.8
20	51.2	136.5
25	41	109.3
30	34.1	90.7
35	29.2	77.9

Table 2 shows that to resolve the speed to within 5 mph, which represents one suitable quantizer for speed sensing for the invention, one needs to be able to resolve a time delay at the higher speeds of about 5 msec for the short baseline (D=1.5 ft) case. To resolve this with a finess of, e.g., one part in 10, you must sample at 0.5 msec, which implies a bandwidth of 2 kHz for the short baseline system. This is not an onerous sampling requirement, especially in view of modern processing capability. Nonetheless, this is a 2 kHz sample rate on two channels (i.e., for the two sensors), sampled with simultaneity better than 0.5 msec as well (e.g., easily achievable inter-channel skew, even for a system without simultaneous sample and hold amplifiers).

Another implementation issue is the fact that the system will lose tracking during airtime, or perhaps when carving an especially aggressive turn, especially in very soft snow. Thus, it is preferably to implement a last estimate hold feature on the display of speed information: if the data is not good enough to update the speed (e.g., if the signals drop below a certain level indicative of air, if an air "trigger signal" is used as a conditional trigger, or if the correlation threshold level is not met), then continue to display the last value measured.

Other speed measurement implementations are provided in FIGS. **55**–**57**. In FIG. **55**, the two sensors **1604**' are integrated beneath a snowboarder's boots **1622**, or even within the boots' soles. In FIG. **56**, a multiplicity of sensors **1604**" is included with a ski **1620** (showing a binding **1622**), and the cross correlation is computed across any pair so as to maximize the signal to noise ratio, or even to adapt to differing snow conditions or skier speeds. In FIG. **57**, a two-dimensional array of sensors **1604**'" is shown arranged around the boot mounts **1640** of a snowboard **1642**, where one may employ either "s_1–s_2" or "s_3–s_4" sensor pairs to measure V depending on which side of the board is dug in (so as to maximize the sensor signals). One may also employ either s_1–s_3 or s_2–s_4 to infer side-slip via correlation measurements as well.

An alternative speed measuring system **1650** is shown in FIGS. **58** and **59**, incorporating a down-looking Doppler system: system **1650** utilizes "bistatic" sonar, while system **1650***a* utilizes "monostatic". All of the transducers **1654** and their operating frequencies are chosen so that the resulting acoustic fields **1656** have wavelengths larger than the transducer diameters, making the radiation and receive patterns broad and overlapping. The transmitter (the "pinger") **1654***a* transmit a pulse, a CW signal, or a band-limited FM signal, and the receiver **1654***b* senses this signal and infers speed from the associated Doppler shift.

The system in FIG. **59** is of particular interest, as it combines transmit and receive functions in a single element, reducing cost. Further, if one uses a pulsed signal in this configuration, then one could use it not only to sense Doppler, but distance and height too (by applying a time gate to the return). A near gate would be set to preclude measuring random hops and skips, but will instead see true "air" when the ski/board is sufficiently high above the snow. One rangefinding system manufactured by Polariod can function as such a system, with electronics for under $10.

Other Techniques for Power Estimation

Power can be used to quantitatively establish "bragging rights" among users, allowing them to compare level of effort expended during a run, over the course of a day, etc.

Power is defined conventionally as the rate of energy transfer into or out of a system. As such, power is an instantaneous quantity, rather than an integrative measure. Consequently, power can be determined as that energy expended over a run, providing a suitable metric to measure and report.

There are three chief components leading to energy expenditure in sports such as skiing and snowboarding:

1. Frictional resistance as the vehicle moves across its supporting surface, impeding the motion of the vehicle;
2. Air drag (both form drag and frictional resistance), impeding the motion of the vehicle/operator system;
3. Supporting the operator upright in the presence of external forces, such as those encountered when skiing over moguls, riding a mountain bike over rough terrain, or when countering the pull of a tow rope when water skiing.

Frictional drag can be modeled in a variety of ways. Nominally, if the resistance is viscous in nature, then the retarding force is linearly proportional to the vehicles speed V:

$$F_d = c \cdot V, \tag{1}$$

where "c" is the viscous drag coefficient, which should be determined empirically. Note that the frictional force is linearly proportional to the velocity V; while in practice the proportionality is nonlinear, the approximation will suffice for present purposes. The linear coefficient can also be estimated, measured or ignored (since power units can be unitless and preferably correspond to suitable numbers to compare multitudes of users in an easy manner). From conservation of energy,

$$\frac{1}{2} m V^2 \sin^2\theta = mg\Delta h - \int_0^{t_f} cV^2(t)\sin^2\theta\, dt, \tag{2}$$

where θ is the angle of the slope, "m" is the mass of the user (e.g., skier +skis), and Δh is the vertical drop between gates. Since the velocity profile is linear over time,

$$\int_0^{t_f} cV^2(t)\sin^2\theta\, dt = \frac{1}{3} cV^2 \sin^2\theta t_f, \quad \text{and thence} \tag{3}$$

$$c = 3\left[\frac{mg\Delta h - \left(\frac{mV^2\sin^2\theta}{2}\right)}{V^2\sin^2\theta t_f}\right]. \tag{4}$$

With respect to the impact on energy expenditure during the activity, the instantaneous power loss is given by

$$P_d(t) = \begin{cases} F_d(t)\cdot V(t) = cV^2(t); & \text{vehicle in contact} \\ 0; & \text{vehicle not in contact} \end{cases}. \tag{5}$$

Assuming that the frictional coefficient is constant over the run, then if one measures V(t), as discussed above or by some other estimation, then the total energy expenditure due to friction over a run is given by

$$E_d = \int_0^{t_{end}} P_d(t)\,dt, \tag{6}$$

where t_{end} is the finishing time.

The resistive force due to air frictional drag is in general proportional to the square of the velocity, hence the energy loss over a run will be proportional to the time integral of this resistive force times the velocity. The proportionality constant will in general be difficult to estimate, or even measure. However, roughly it is proportional to a constant times the cross sectional (frontal) area of the user. One can get a first cut at this area by assuming that the width of a skier is a fixed proportion of their height, then from a measurement of weight (measured, for example, using the FSR means previously described) and a standard actuarial table for weight/height correlation. Thus,

$$E_a = \int_0^{t_{end}} amV^3(t)\,dt \cong \sum_{i=1}^{\left(\frac{t_{end}}{N}\right)} amV^3(t_i)\Delta t, \tag{7}$$

where "m" is the mass of the skier. The proportionality constant "a" is set heuristically.

Finally, the contribution to energy expenditure from supporting the operator upright in the presence of external forces can be estimated using a system **1666** of FIG. **60**, where the user **1670** wears an accelerometer **1671** around her waist, capable of measuring the vertical component of acceleration Δy(t). Further, the ski/board/boot sole **1672** has a force measuring means **1674** (as discussed herein) to measure the force component "F". The operator **1670** will be dissipating energy by bending their knees, decelerating the mass of their upper body. Since the legs can be though of as rigid links with rotary springs at the knee and hip joints, the force due to this deceleration will be transmitted to the force sensing means (springs transmit forces). This, the instantaneous power dissipated in maintaining a tuck is given by

$$P_b = F(t)\cdot\frac{dy(t)}{dt} = F(t)\cdot\int^t y''(t)\,dt. \tag{8}$$

Note that this equation is not conditional with respect to vehicle contact as per equation (5) of this section, as the reaction force F goes to zero when the vehicle leaves the surface. The energy expended over a run due to this effort is then given by

$$E_b = \int_0^{t_{end}} F\cdot\left[\int^t y''(t)\,dt\right]dt. \tag{9}$$

In total, the energy expended over a run is given as the sum of the three energy components:

$$E_{total}=E_d+E_a+E_b. \tag{10}$$

Alternate systems to measure the skier's hip position y(t) (shown in FIG. **60**) is provided in FIGS. **61** and **62**. In FIG. **61**, a flexible element **1680** is sewn into the skier's pants **1682**, covering the leg **1684**. A PVDF or NiTiNOL SMA strip **1686** is bonded to the element **1680**, and will act as a large-area strain gage. When the skier bends his knees the gage **1686** will stretch, and to first order this strain will be proportional to the change in the leg's bend angle at the knee. By differentiating this signal one can obtain a signal proportional to the velocity y(t) depicted above, but without using an accelerometer. Since one need not integrate this signal to compute velocity or displacement, the energy expenditure is computed simply as a multiplication.

Still another system for power measurement is shown in FIG. **62** In FIG. **62**, a force gage or compressive strain element **1700** is inserted into the inside of a tongue **1702** of a ski boot **1704**. When the skier leans forward, the force on the tongue **1702** increases to first order in proportion to the angle of the lower leg with respect to the ski/board. Thus, one can measure a signal indicative of the quantity y(t) by measuring the force on the boot's tongue. Once again, since one need not integrate this signal to compute velocity or displacement, the energy expenditure is computed as a multiplication.

Other Techniques for Drop Distance

In one aspect, instantaneous height above the surface (a relative rather than an absolute measurement) is provided by the system of FIG. **59**. By using a simple pulse output sound waveform, and applying a time gate to the acoustic return, the system can sense the distance of a skier/boarder above the ground from the round-trip time it takes the signal to return to the sensor. This provides a measure of the skier's instantaneous height.

Other Techniques for Airtime

Several alternative airtime sensors are next shown, including one new signal processor to detect transients to provide a "trigger" or "gate" for estimating airtime.

With a FSR (Force Sensing Resistor) one can detect the presence of a skier in the vehicle (for instance, in the bindings if positioned beneath the boot and above the binding), the skier's weight, and whether the skier is being supported by a surface or is "airborne". A typical FSR **1800** is sketched in FIG. **63**. FSRs can be purchased from IEE Interlink for $2–$4 each in small quantities depending on the aperture size. These pads consist of interdigitated electrodes **1802** over a semi-conductive polymer ink **1804**. The resistance between the electrodes **1802** decreases nonlinearly as a function of applied compressive load, and they exhibit high sensitivity. A PSA layer is generally applied to one side; a further encapsulant (say of polyurethane) is desirable for a harsh/wet environments. A typical FSR signal conditioning circuit is shown in FIG. **64** that provides a voltage indicative of the FSR's changing resistance. Unlike accelerometers or induced-strain sensors (such as the AMP PVDF sensors), FSRs sense static loads.

Consider FIGS. **65** and **66**. An FSR described above is placed in the load path of the skier, either beneath the boot **1808**, within the boot's heel **1809**, within the ski/board, or beneath the ski/board **1810**. Consequently, when the skier **1812** stands on the ski/board **1810**, and when the ski/board **1810** is on the ground, there is a reaction force FR pushing up against the skier **1812**. This will be sensed by the FSR, as shown in FIG. **67**, region "A". When the skier **1812** is pushed by bumps and moguls this force will change, as shown in region "B", FIG. **67**; owing to Newton's second law. When the skier/boarder **1812** leaves the ground, as shown in FIG. **66**, then region "C" is realized and reaction force diminishes to zero as an easily-sensed transient. This too will be sensed by the FSR, as suggested in FIG. **67**, region D of Trace I. Trace II of FIG. **67** is closer to zero force (if not actually equal zero) and corresponds to the case whereupon there is no residual compression of the FSR due

to the clamping load of the binding, if the sensor is in the binding or boot heel (or due to residual mechanical stresses induced during manufacture if the sensor is embedded within the ski/board). Trace II, which shows a higher "residual" load, reflects when these residual stresses are present, and needs to be quantified if the transient amplitude change in region "C" is to be use as a trigger or gate to the airtime estimation. The skier/boarder **1812** becomes reacquainted with the supporting surface in region "E", as the reaction force may now actually peak owing to the compressional transient; this too is measured by the FSR in the load path. The skier/boarder **1812** returns to "normal" travel again in region "F".

The output of the FSR can in all liklihood be low-pass filtered at around 20 Hz, since the latency in estimating liftoff can be about 500 msec (i.e., a reasonable minimum airtime lower limit). Trigger generation is effected using only a comparator or similar analog thresholding electronics based upon signal amplitude, and perhaps slew rate or hysteresis (probably not necessary); and there is no need to measure spectral changes. Unfortunately, FSRs do not have significant bandwidth and thus can limit the measurable vehicle speed.

In the user of PVDFs (i.e., the piezo foils discussed above), certain care should be taken. First, they are only capable of measuring dynamic signals: they will not measure a static load, or a static displacement. For static measurements (such as inferring weight as described above) or very low frequency measurements (typically below 5 to 10 Hz), other sensors should be employed such as FSRs.

A second performance limitation of the PVDF is that these sensors are far more sensitive to induced in-plane strains than to compressional strains. These strain axes **1–3** are defined in FIG. **68**, showing one piezo foil **1900**. The in-plane strains are in the "1" and "2" directions, with the "1" direction being the "pull" direction for the PVDF (almost always the long axis for the AMP sensing strips) associated with the material's processing. The compressional strain is in the "3" direction. Note that the electromechanical constituitive constants relating an input strain to an output voltage measured across the thickness of the sensor (where the electrodes are always placed) are approximately an order of magnitude larger in the "1" direction than in the "3" direction; while the values in the "2" and "3" directions are approximately equal. This is an artifact of the fabrication methodology for so-called "uniaxial" PVDF. Consequently, this makes the AMP PVDF strips excellent dynamic strain gages.

This enhanced strain performance is not a problem if the sensor strip is attached to a rigid, non-bending surface, as suggested above (e.g., the housing **32**, FIG. **1**A). In this configuration the piezo is rigidly glued to an inflexible surface **1910**, FIG. **69**, and a rigid mass M is attached to the top of the piezo **1912**. Consequently, when the lower surface is vibrated, the mass M causes the piezo **1912** to compress owing to the inertial forces, leading to a voltage output ΔV across the sensor's thickness proportional to the vibration, which is essentially how an accelerometer works.

Consider a piezo strip **1920** attached to a flexible surface **1922**, as suggested in FIG. **70**. When the surface bends in response to an input vibration, this induces an output in the sensor ΔV proportional to the bending strain. The vibration need not accelerate the mass M in the vertical direction to induce this output; so, if the surface is a ski, and the ski flexes irrespective of whether or not the ski is accelerated vertically, you will measure an output that will typically swamp any signal due to vertical acceleration or vibration. In this situation, you are measuring the flexural response of the ski, and not the vertical vibration induced by the ski's passage over a rough surface. In order to measure this vertical vibration, one needs to deconvolve the ski's flexural dynamics, a significant challenge. Note also that the ski itself is acting as a filter, since it has natural modes of response much like a guitar string or drum head, and very much wants to respond at those frequencies. This will skew and perhaps dominate any measurement of the vibrational spectra.

These problems are addressed in FIGS. **71** and **72**. Consider a ski or snowboard having two PVDF sensors deposited on it, one atop the ski and one below (or any symmetric arrangement about the midline of the ski/board), registered spatially one above the other. These are laid up with their polarization axes aligned, as suggested by the arrows in FIGS. **71**,**72**. In FIG. **71**, the ski bends, and the top sensor sees a compressive strain, while the lower sees an extensive strain. Thus, charge will migrate to the outer surfaces of both piezos. If one measures the voltage potential across these two sensors the result will be (ideally) zero; the same is true for bending in the opposite direction, for higher-order modes, etc. In practice, the bending strain response is significantly diminished, with residual response due to mismatched sensors and positioning errors. One can think of this arrangement as providing "common mode rejection" for bending strains. In FIG. **72**, if a compressive stress is applied as from a vertical acceleration of the ski owing to its passage over an irregular surface then a potential difference is induced over the outer layers of the sensor composite, and a voltage V is measured.

An alternate means of achieving an analogous result on one side of the vehicle is to build a sandwich of two PVDF layers, as shown in FIG. **73**. Here, the polarization axes are aligned in opposition. Unlike the previous embodiment, this arrangement's voltage output is measured via the connections shown at the left side **1980** of the sensor **1982**, which tap both the inner and outer electrodes of the piezo composite. This arrangement has proven to yield a superior acoustic receiver, and provides common mode rejection to electrical interference such as from-radio transmitters.

For both embodiments of FIGS. **71**/**72** and **73**, one can employ a voltage-follower circuit to drive long leads, if required.

FIG. **74** illustrates a gaming system **2200** which connects several mountains **2202***a*–**2202***c* via a WAN or the Internet **2208**. A plurality skier or snowboarder **2204** are on the mountains **2202**; and each has a data transmitting device **2206** (the device is illustrated in FIG. **75**); and each device **2206** includes functionality such as described herein to provide performance data. In particular, each device **2206** includes a microprocessor **2208** (or microcontroller or other intelligence sufficient to assist in acquiring data from connected transducers) and can include one or more of the following: airtime sensor **2210***a*, speed sensor **2210***b*, power sensor **2210***c* and drop distance sensor **2210***d*. If required, a battery drives the device **2206**. The microprocessor **2208** collects data from one or more sensors **2210** (note that sensors **2210** can be simple transducers connected through conditioning electronics **2212**), processes the data, and transmits the data to a data driver **2214**, such as data section **22**, FIG. **1**A. The data driver **2214** communicates with receivers (e.g., the receiver **72**, FIG. **1**B) at each respective lodge **2220***a*–**1220***c* so that the data is available on the Internet **2208**. In this manner, data from any mountain is collected for comparison to other players on other mountains. A main database **2222** keeps and stores all data for

access through the Internet **2208**. For example, the database **2222** can include a WWW interface which all can access (if desired, or only if give access authority) to acquire and compare scores across the nation (or world).

Note that the game played by the system **2200** can be for airtime, speed, power, or drop distance, or a combination of one or more. Further, it should be understood that the medium of skiing is shown illustratively, and that other sports are easily accomplished in a similar system. By way of example, each person **2204** could be a mountain biker instead. Or, each mountain could be replaced by a lake or ocean and each person **2204** can be a windsurfer.

Certain devices of the invention can also be incorporated into a boot binding, such as shown in FIGS. **76** and **77**. In FIG. **76**, a ski binding **2300** is shown; while in FIG. **77**, a snowboarder binding **2302** is shown. In each case, a sensing unit **2304** such as described above is incorporated into the binding. The device **2304** can include, for example, an airtime device and/or a power sensor and/or a pitch-based speed sensor and/or an altimeter. A data transfer unit **2306** (e.g., a radio, inductive loop, IR transmitter) connects to the unit **2304** so that data (e.g., airtime, power, speed and drop distance) can be relayed to the user (or to a data unit or to the base station). For example, the user carries a sister data receive unit (not shown) that provides the user with the desired data. Note that data transfer unit can be an IR transmitting section and the receive data unit can be a datawatch, such as described above. The device **2304** includes power and other circuitry so as to operate and acquire the appropriate data, as described above.

The advantage of the design of FIG. **76** is that a sensing unit according to the invention is not mounted directly on the ski (or snowboard) and is further protected from the environment. Also, it is more practical to mounting to a board or ski. Without such packaging advantage, it is difficult, though not impossible, to package a sensing unit (such as an air meter or speed meter, described herein) onto a board with sufficiently small size and weight. Preferably, a device such as the device **1102** of FIG. **41** has only a depth of 0.300" or less, and an overall weight of less than ⅛ to ¼ pound. Such a size is preferred in order to fit the device into a recessed area on the board without excessive overhang or add-on weight. However, as in FIG. **77**, this goal is relaxed somewhat.

Power can also be determined by other methods, in accord with the invention. For example, with an accelerometer pointed up, relative to the ski and perpendicular to the ground, when the user hits bumpy terrain, the accelerometer will have "peaks" and valleys. One technique for determining power is thus to count peaks past some predetermined threshold, such as shown in FIG. **78**, which illustrates "5" peak signals which pass the threshold "k". The value "5" does not have to correspond to a real unit, such as g's. The value of k can be set experimentally such as through the data unit described above. k should be above 1G, for example, which is a constant force. That is, when the accelerometer is not pointed along the gravity vector, it might read "0" and will read "1"—and neither event should effect the power calculation. Alternatively, an exact determination of g's can be made and provided by the sensor, and thus given to the user. However, this requires extensive processing and is not overly practical. The goal here is to display units that are common to all. For example, power units could extend from 0–10 (or 0–100) wherein, for example, a user with a 9 shows great exertion as compared to a user with a "1" reading (or alternatively, a 70 as compared to a 10 reading). It is thus important to make the power determination at appropriate intervals, or at a set integration time.

FIG. **79** shows a sensor **2499** such as described herein including a doppler module **2500**. The beam **2502** from the module **2500** extends backwards, or forwards, on the ski (or snowboard) **2506** and about 45 degrees to the side. In this manner, the beam **2502** need not extend through the board, such as described above; but can instead broadly illuminate a region **2504** away from the ski **2506**. Since the module **2500** is slightly above the board, it can illuminate the region **2504** without going through the board **2506**. This greatly assists taking such measurements, for example, in the ultrasound region since ultrasound does not transmit through boards well. Similarly, for microwave, metal in the board can completely wipe out a signal return, effectively eliminating the speed measurement.

It should be noted that a power sensing unit can be made generically and simply on a wrist watch, as discussed above. Such a unit is useful for various sports, such as basketball, to monitor a user's aggressiveness in play. As shown in FIG. **80**, such a unit in the form of a watch **2600** can provide data to a computer **2602** at the gaming site (FIG. **80** shows one user on a basketball court, for example; though the scene is equally applicable to other sports, e.g., soccer, football and hockey). The computer **2602** and watch **2600** have data transfer capability such as through RF signals, known to those in the art. During play, the user **2604** is effectively "monitored" so that the coach or owner can effectively gauge performance and aggressiveness. The device within the watch **2600** can include sensors such as described herein. The watch **2600** further includes batteries and required circuitry.

The unit **2600'** could also be placed and/or sewn into a user's shorts, as shown in FIG. **81**.

Certain sensing units of the invention require power. Often it is desirable to turn the power off when the unit is not in use, such as when the user is in a bar. In accord with the invention, a FET switch can be used for this purpose, such as known in the art. This saves battery life.

Power and/or speed can also be measured and assessed by measuring signal PSD.

Barometers and altimeters, in accord with the invention, preferably "logic" out data at the base and peak of a mountain, so that data is not stored and recorded in these regions. This is similar to logic out regions such as airtime above 30 seconds, which likely does not occur, or for less than 1 second (or 2 second) which resembles walking and which should be ignored.

Note, if there is no airtime, often, the circuitry of the invention should operate to logic out drop distance too, such as shown in FIG. **82**.

FIG. **83** illustrates one other embodiment wherein data from a sensor **2699** such as described herein (e.g., a sensor such as an airtime sensor) transmits data to a user **2700** at the user's helmet **2702**. A heads-up display **2704** and/or a microphone **2706** can be used to relay performance data to the user **2700**, for example by informing the user of "airtime". If the user is a speed skier, the data is useful to modify form since they do not wish airtime. A base station computer can also monitor the airtime data which can then be evaluated later. A buzz sent to the mic **2706** can similarly inform the user **1700**. The heads-up display **2704** can take the form of sunglasses; and the helmet **2702** is not required.

Sensing units of the invention can be integrated within many sports implements, such as shown in FIG. **84**. Each implement of FIG. **84** includes a sensing unit **3000**, described herein. The implements include, at least, ice skates, water skis **3004** (or wakeboards **3004**), ski poles **3006**, windsurfer **3008**, surfboard **3010**, tennis racquet **3012**,

skateboard **3014**, roller blade **3016**, and volleyball **3018**. Other implements are within the scope of the invention.

Those skilled in the art should appreciate that changes can be made within the description above without departing from the scope of the invention.

The invention thus attains the objects set forth above, among those apparent from preceding description. Since certain changes may be made in the above apparatus and methods without departing from the scope of the invention, it is intended that all matter contained in the above description or shown in the accompanying drawing be interpreted as illustrative and not in a limiting sense.

It is also to be understood that the following claims are to cover all generic and specific features of the invention described herein, and all statements of the scope of the invention which, as a matter of language, might be said to fall there between.

Having described the invention, what is claimed is:

1. A sensing unit for monitoring performance data associated with sporting activity, comprising:

an airtime sensor for sensing movement along a surface and for generating first electrical data indicative of the movement;

a power sensor for sensing energy imparted into the power sensor during the movement and for generating second electrical data indicative of the energy; and

a controller subsystem for processing the first electrical data to determine airtime and for processing the second electrical data to determine power, power being defined as proportionate to the energy.

2. The sensing unit of claim **1**, further comprising a data transfer section for remotely transmitting performance data to a data unit or a base station.

3. The sensing unit of claim **1**, wherein the controller subsystem comprises logic to eliminate certain performance data based upon pre-selected characteristics.

4. The sensing unit of claim **1**, wherein the sensing unit comprises an interface for mounting to a sporting vehicle, and further comprising a data unit for wirelessly interfacing with the sensing unit to communicate performance data to a user.

5. The sensing unit of claim **1**, further comprising a data unit for wirelessly interfacing with the sensing unit to acquire performance data.

6. The sensing unit of claim **5**, wherein the data unit further comprises a user interface for displaying performance data.

7. The sensing unit of claim **6**, wherein the user-interface comprises a heads-up display.

8. The sensing unit of claim **7**, wherein the heads-up display comprises one of goggles or sunglasses.

9. The sensing unit of claim **5**, wherein the data unit further comprises a user interface, including a speaker, for generating words indicative of performance data.

10. The sensing unit of claim **9**, wherein the user interface comprises head-phones.

11. The sensing unit according to claim **1**, wherein the airtime sensor comprises a piezo foil for sensing sound generated by the movement along a surface, the airtime sensor converting the sound to the first electrical data indicative of the sound.

12. The sensing unit according to claim **1**, wherein the airtime sensor comprises an accelerometer for sensing acceleration generated by the movement along a surface, the airtime sensor converting the acceleration to the first electrical data indicative of the movement.

13. The sensing unit according to claim **12**, wherein the power sensor comprises the accelerometer for sensing shock and vibration generated by the movement along the surface, the power sensor converting the shock and vibration to the second electrical data indicative of the energy.

14. The sensing unit according to claim **13**, further comprising conditioning electronics for processing the second electrical data into data indicative of energy endured by the power sensor.

15. The sensing unit of claim **1**, further comprising a data transfer section for wirelessly transmitting performance data, and further comprising a watch data unit for receiving the transmitted performance data and for informing a wearer of the watch of the performance data.

16. A sensing unit for monitoring performance data associated with sporting activity, comprising:

a power sensor for sensing movement along a surface and for sensing energy imparted into the power sensor during the movement, the power sensor generating electrical data indicative of the-energy;

a controller subsystem for processing the electrical data to determine power, power being defined as proportionate to the energy; and

a transmitter for wirelessly communicating data indicative of the power to a remote receiver.

17. The sensing unit according to claim **16**, wherein the power sensor comprises a detector selected from the group of piezo foil and accelerometer, the power sensor converting the signals from the detector to the electrical data indicative of the energy.

18. The sensing unit according to claim **16**, further comprising electronics for temporally binning the electrical data into pre-selected frequency ranges.

19. The sensing unit according to claim **18**, wherein the electronics further comprise logic to use at least part of the pre-selected frequency ranges to determine the power.

20. The sensing unit according to claim **18**, wherein the controller subsystem processes the electrical data in the pre-selected frequency ranges to correlate the electrical data to speed of the movement.

21. The sensing unit according to claim **18**, wherein the controller subsystem processes the electrical data in the pre-selected frequency ranges to determine the power.

22. The sensing unit of claim **16**, wherein the controller subsystem comprises logic to determine power over a pre-selected time interval between about a fraction of a second and eight hours.

23. The sensing unit according to claim **16**, wherein the controller subsystem comprises logic for determining airtime based upon a substantial absence of the electrical data over a period between about one half second and five seconds.

24. The sensing unit according to claim **23**, wherein the controller subsystem comprises logic for sensing displacement orthogonal to the movement during airtime, to determine drop distance.

* * * * *

UNITED STATES PATENT AND TRADEMARK OFFICE

CERTIFICATE OF CORRECTION

PATENT NO. : 6,539,336 B1
DATED : March 25, 2003
INVENTOR(S) : Vock et al.

It is certified that error appears in the above-identified patent and that said Letters Patent is hereby corrected as shown below:

Title page,
Item [75], the inventorship is incorrect in the issued patent. The correct inventors are:

-- **Curtis A. Vock**
Dennis Darcy
Andrew Bodkin
Perry Youngs
Adrian F. Larkin
Peter Flentov --

Signed and Sealed this

Twelfth Day of August, 2003

JAMES E. ROGAN
Director of the United States Patent and Trademark Office

UNITED STATES PATENT AND TRADEMARK OFFICE

CERTIFICATE OF CORRECTION

PATENT NO. : 6,539,336 B1
DATED : March 25, 2003
INVENTOR(S) : Vock et al.

It is certified that error appears in the above-identified patent and that said Letters Patent is hereby corrected as shown below:

Title page,
Item [73], Assignee, "**PhatRat Technologies, Inc.**," should read -- **PhatRat Technology, Inc.** --.

Signed and Sealed this

Twenty-second Day of November, 2005

JON W. DUDAS
Director of the United States Patent and Trademark Office