Piezoelectric Accelerometers

Theory and Application

Published by:

Metra Mess- und Frequenztechnik © 2001

HAPTIC EX2012

Contents

1. Introduction **3**

1.1. Why Do We Need Accelerometers? 3
1.2. The Advantages of Piezoelectric Sensors 3
1.3. Instrumentation 4

2. Operation and Designs **4**

2.1. Operation 4
2.2. Accelerometer Designs 7
2.3. Built-in Electronics 9

3. Characteristics **12**

3.1. Sensitivity 12
3.2. Frequency Response 13
3.3. Transverse Sensitivity 13
3.4. Maximum Acceleration 13
3.5. Non-Vibration Environments 14
3.5.1. Temperature 14
3.5.2. Base Strain 15
3.5.3. Magnetic Fields 15
3.5.4. Acoustic Noise 15

4. Application Information **16**

4.1. Instrumentation 16
4.1.1. Accelerometers With Charge Output 16
4.1.2. Accelerometers With Built-in Electronics 16
4.1.3. Intelligent Accelerometers to IEEE1451.4 17
4.2. Preparing the Measurement 18
4.2.1. Mounting Location 18
4.2.2. Choosing the Accelerometer 19
4.2.3. Mounting Methods 19
4.2.4. Cabling 21
4.2.5. Calibration 23

Notice: ICP is a registered trade mark of PCB Piezotronics Inc.

#390 08.01

1. Introduction

1.1. Why Do We Need Accelerometers?

Vibration and shock are present in all areas of our daily lives. They may be generated and transmitted by motors, turbines, machine-tools, bridges, towers, and even by the human body.

While some vibrations are desirable, others may be disturbing or even destructive. Consequently, there is often a need to understand the causes of vibrations and to develop methods to measure and prevent them.

The sensor we manufacture serves as a link between vibrating structures and electronic measurement equipment.

1.2. The Advantages of Piezoelectric Sensors

The accelerometers Metra has been manufacturing for over 40 years utilize the phenomenon of piezoelectricity. They generate an electric charge signal proportional to vibration acceleration. The active element of Metra accelerometers consists of a specially developed ceramic material with excellent piezoelectric properties.

Piezoelectric accelerometers are widely accepted as the best choice for measuring absolute vibration. Compared to the other types of sensors, piezoelectric accelerometers have important advantages:

- Extremely wide dynamic range, low output noise - suitable for shock measurement as well as for almost imperceptible vibration
- Excellent linearity over their dynamic range
- Wide frequency range
- Compact yet highly sensitive
- No moving parts - no wear
- Self-generating - no external power required
- Great variety of models available for nearly any purpose
- Acceleration signal can be integrated to provide velocity and displacement

1.3. Instrumentation

The piezoelectric principle requires no external energy.
Only alternating acceleration can be measured. This type of accelerometer is not capable of a true DC response, e.g. gravitation acceleration.
The high impedance sensor output needs to be converted into a low impedance signal first. For processing the sensor signal a variety of equipment can be used, such as:

- Time domain equipment, e.g. RMS and peak value meters
- Frequency analyzers
- Recorders
- PC instrumentation

However, the capability of such equipment would be wasted without an accurate sensor signal. In many cases the accelerometer is the most critical link in the measurement chain. To obtain precise vibration signals some basic knowledge about piezoelectric accelerometers is required.

2. Operation and Designs

2.1. Operation

The active element of the accelerometer is a piezoelectric material. One side of the piezoelectric material is connected to a rigid post at the sensor base. A so-called seismic mass is attached to the other side. When the accelerometer is subjected to vibration a force is generated which acts on the piezoelectric element. This force is equal to the product of the acceleration and the seismic mass. Due to the piezoelectric effect a charge output proportional to the applied force is generated. Since the seismic mass is constant the charge output signal is proportional to the acceleration of the mass. Over a wide frequency range both sensor base and seismic mass have the same acceleration magnitude hence the sensor measures the acceleration of the test object.
The piezoelectric element is connected to the Sensor output via a pair of electrodes. A summary of basic calculations shows Figure 1.

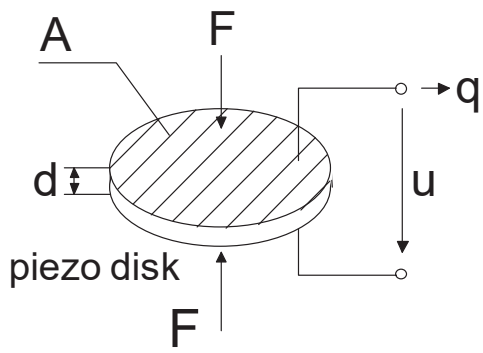

$$q = d33\ F$$

$$u = \frac{d33\ d}{e33\ A} F$$

$$F = m\ A$$

charge sensitivity:

$$Bqa = \frac{q}{a}$$

voltage sensitivity:

$$Bua = \frac{u}{a}$$

A	electrode area
d	thickness
F	force
q	charge
u	voltage
d33, e33	piezo constants

Figure 1: Piezoelectric effect, basic calculations

Some accelerometers feature an integrated electronic circuit which converts the high impedance charge output into a low impedance voltage signal.
A piezoelectric accelerometer can be regarded as a mechanical low-pass with resonance peak.
Its equivalent circuit is a charge source in parallel to an inner capacitor.
Within the useful operating frequency range the sensitivity is independent of frequency, apart from certain limitations mentioned later (see section 3.1).
The low frequency response mainly depends on the chosen preamplifier. Often it can be adjusted. With voltage amplifiers the low frequency limit is a function of the RC time constant formed by accelerometer, cable, and amplifier input capacitance together with the amplifier input resistance (see chapter 4.2.4.).
The upper frequency limit depends on the resonance frequency of the accelerometer. In order to have a wider operating frequency range the resonance frequency has to be increased. This is usually achieved by reducing the seismic mass. However, the lower the seismic mass, the lower the sensitivity. Therefore, accelerometers with a high resonance frequency are usually less sensitive (e.g. shock accelerometers).

Figure 2 shows a typical frequency response curve of an accelerometer's electrical output when it is excited by a constant vibration level.

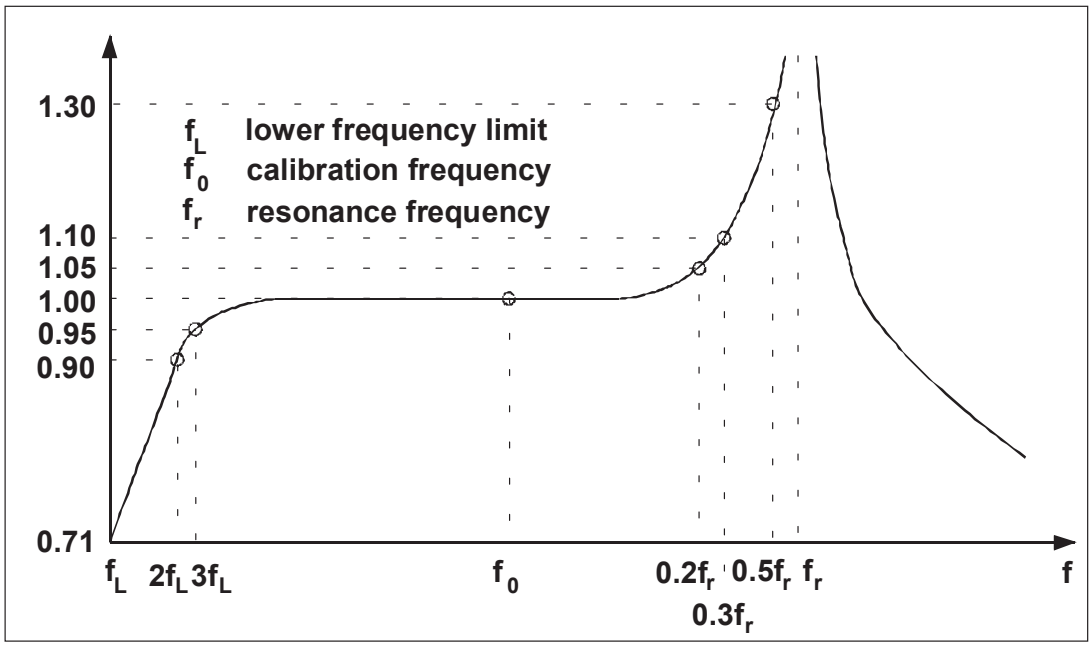

Figure 2: Frequency response curve

Several useful frequency ranges can be derived from this curve:

- At about 1/5 the resonance frequency the response of the sensor is 1.05. This means that the measured error compared to lower frequencies is 5 %.
- At approximately 1/3 the resonance frequency the error is 10 %. For this reason the "linear" frequency range should be considered limited to 1/3 the resonance frequency.
- The 3 dB limit with about 30 % error is obtained at approximately one half times the resonance frequency.

2.2. Accelerometer Designs

Metra employs 3 mechanical construction designs:

- Shear system ("KS" types)
- Compression system ("KD" types)
- Bender system ("KB" types)

The reason for using different piezoelectric systems is their individual suitability for various measurement tasks and varying sensitivity to environmental influences. The following table shows advantages and drawbacks of the 3 designs:

	Shear	Compression	Bender
Advantage	• low temperature transient sensitivity • low base strain sensitivity	• high sensitivity-to-mass ratio • robustness • technological advantages	• best sensitivity-to-mass ratio
Drawback	• lower sensitivity-to-mass ratio	• high temperature transient sensitivity • high base strain sensitivity	• fragile • relatively high temperature transient sensitivity
Examples	KS70/71, KS80, KS93, KS943	KD37, KD41, KD93	KB12, KB103

Due to its better performance shear design is used in the majority of newly developed accelerometers.

The main components of the 3 accelerometer designs are shown in the following illustrations:

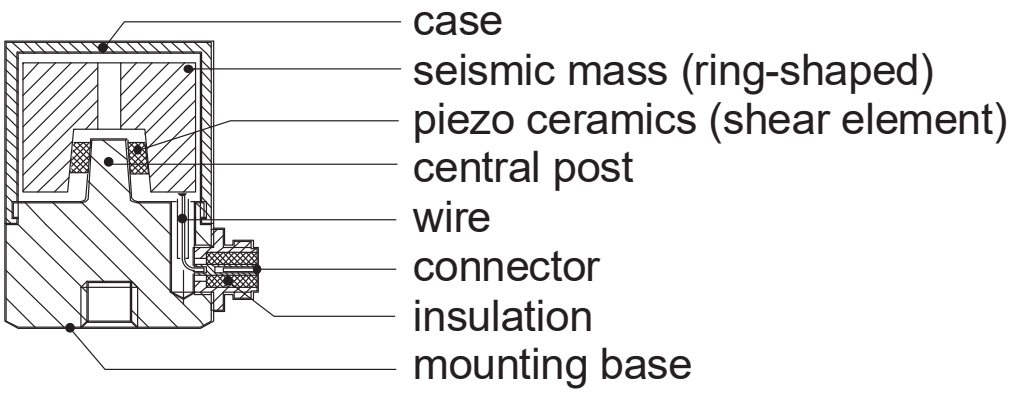

Figure 3: Shear Design

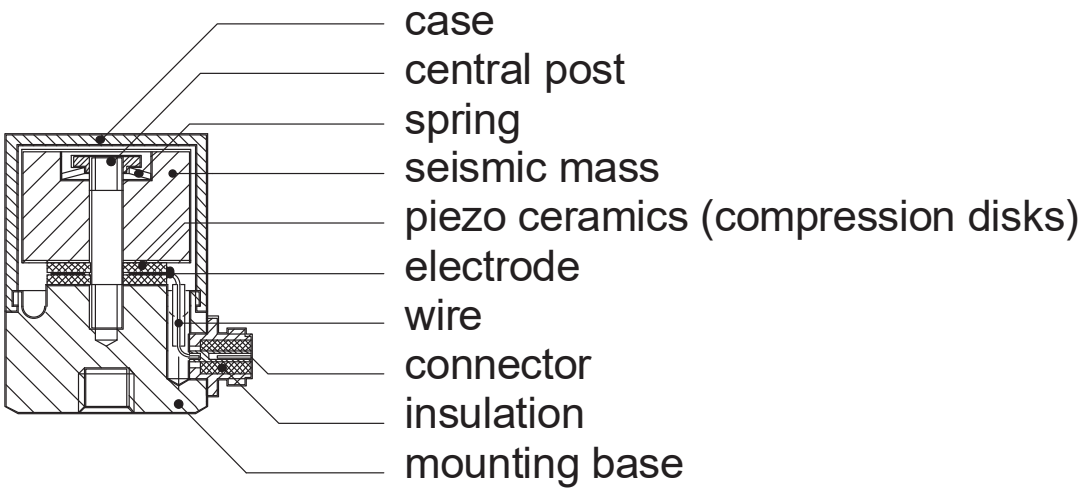

Figure 4: Compression Design

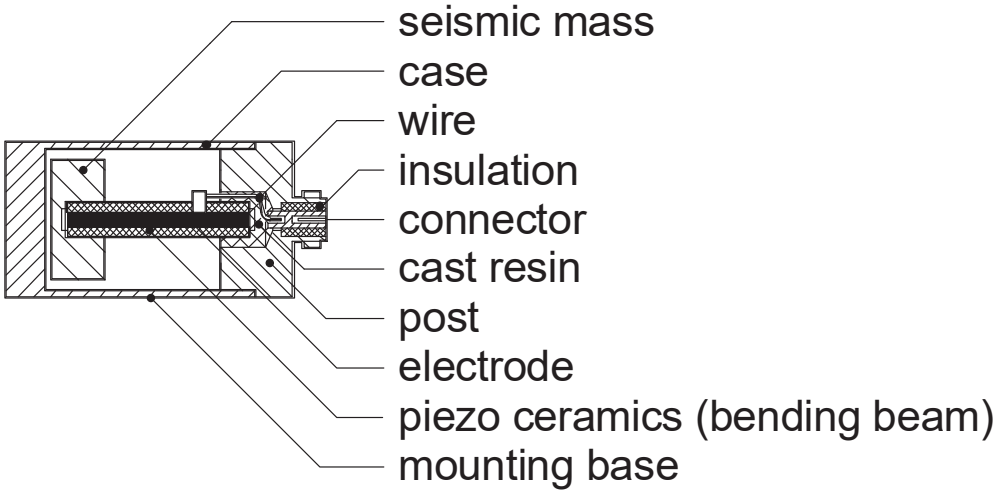

Figure 5: Bender Design

2.3. Built-in Electronics

Several of the accelerometers that we manufacture contain a built-in preamplifier. It transforms the high impedance charge output of the piezo-ceramics into a low impedance voltage signal which can be transmitted over long distances. Metra uses the well-established ICP® standard for electronic accelerometers ensuring compatibility with a variety of equipment. The abbreviation ICP means "Integrated Circuit Piezoelectric". The built-in circuit is powered by a constant current source (Figure 6). The vibration signal is transmitted back to the supply as a modulated bias voltage. Both supply current and voltage output are transmitted via the same line which can be as long as several hundred meters. The capacitor C_C removes the sensor bias voltage from the instrument input. This provides a zero-based AC signal. Since output impedance of the signal is very low, specially shielded sensor cables are not required, thereby allowing the use of low-cost coaxial cables.

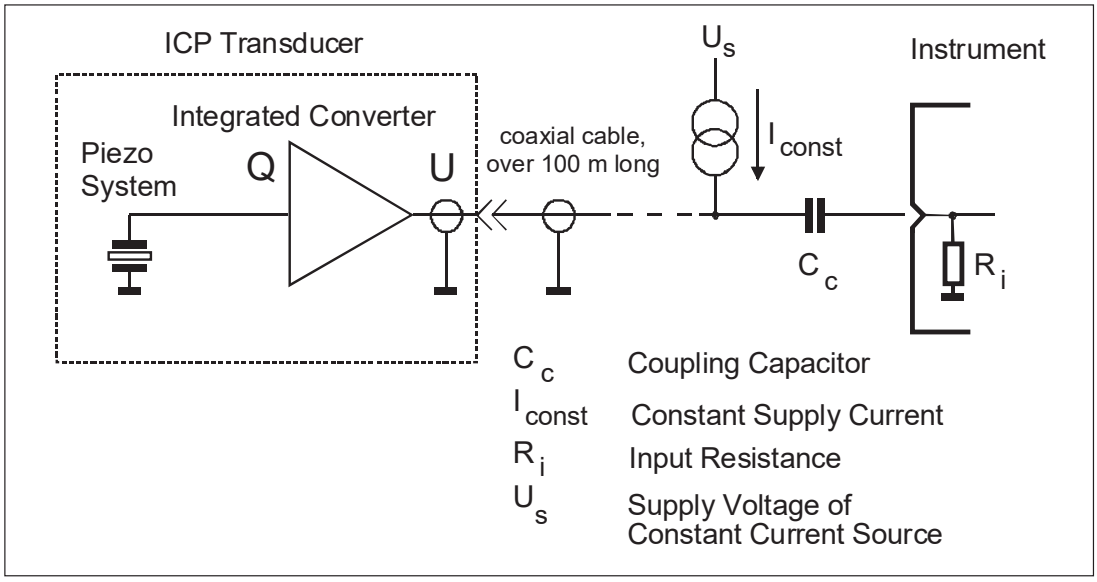

Figure 6: ICP® principle

The following table shows advantages and drawbacks of ICP® compatible transducers compared to transducers with charge output.

	ICP® Compatible Output	Charge Output
Advantage	• Fixed sensitivity regardless of cable length and cable quality • Low-impedance output can be transmitted over long cables in harsh environments • Inexpensive signal conditioners	• No power supply required • No noise, highest resolution • Wide dynamic range • Higher operating temperatures
Drawback	• Constant current excitation required • Inherent noise source Upper operating temperature limited to 120 °C typically	• Limited cable length • Special low noise cable required • Charge amplifier required

A variety of instruments contain a constant current sensor supply. Examples from Metra are the Signal Conditioners of M68 series and the Vibration Monitor model M10. The constant current source may also be an external unit, for example models M27 and M31.
Constant current may be between 2 and 20 mA. Zero-bias voltage, i.e. the output voltage without excitation, is between 8 and 12V. It varies with supply current and temperature. The output signal of the sensor oscillates around this bias voltage. It never changes to negative values. The upper limit is set by the constant current source supply voltage. This supply voltage should be between 20 and 30 V. The lower limit is the saturation voltage of the built-in amplifier (about 0.5 V). Metra guarantees an output span of $> \pm 6$ V for the sensor. Figure 7 illustrates the dynamic range of an ICP® compatible sensor.

Important: Under no circumstances a voltage source without constant current regulation should be connected to an ICP® compatible transducer.

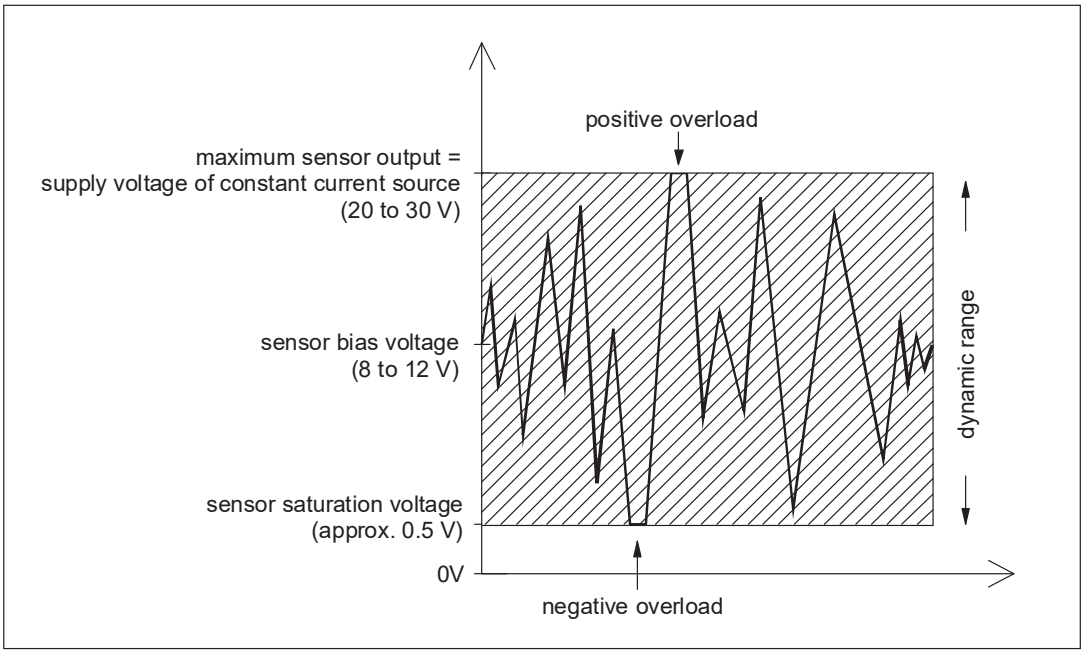

Figure 7: Dynamic range of ICP® compatible transducers

In Figure 7 can be seen that ICP® compatible transducers provide an intrinsic self-test feature. By means of the bias voltage at the input of the instrument the following operating conditions can be detected:

- $U_{BIAS} < 0.5$ to 1 V: short-circuit or negative overload
- 1 V $< U_{BIAS} <$ 18 V: O.K., output within the proper range
- $U_{BIAS} >$ 18 V: positive overload or input open
  (cable broken or not connected)

This self-test feature is applied for instance in the M108/116 signal conditioners. A multicolor LED indicates the operating condition.
The lower frequency limit of Metra´s transducers with integrated electronics is 0.3Hz for shear accelerometers and 3Hz for compression and bender systems. The upper frequency limit mainly depends on the mechanical properties of the sensor. In case of longer cables their capacitance has to be taken into consideration. Typical coaxial cables supplied by Metra have a capacitance of approximately 100pF/m. Figure 8 shows the maximum output as a function of frequency. The nomogram includes 3 curves for different cable capacitance and supply current.

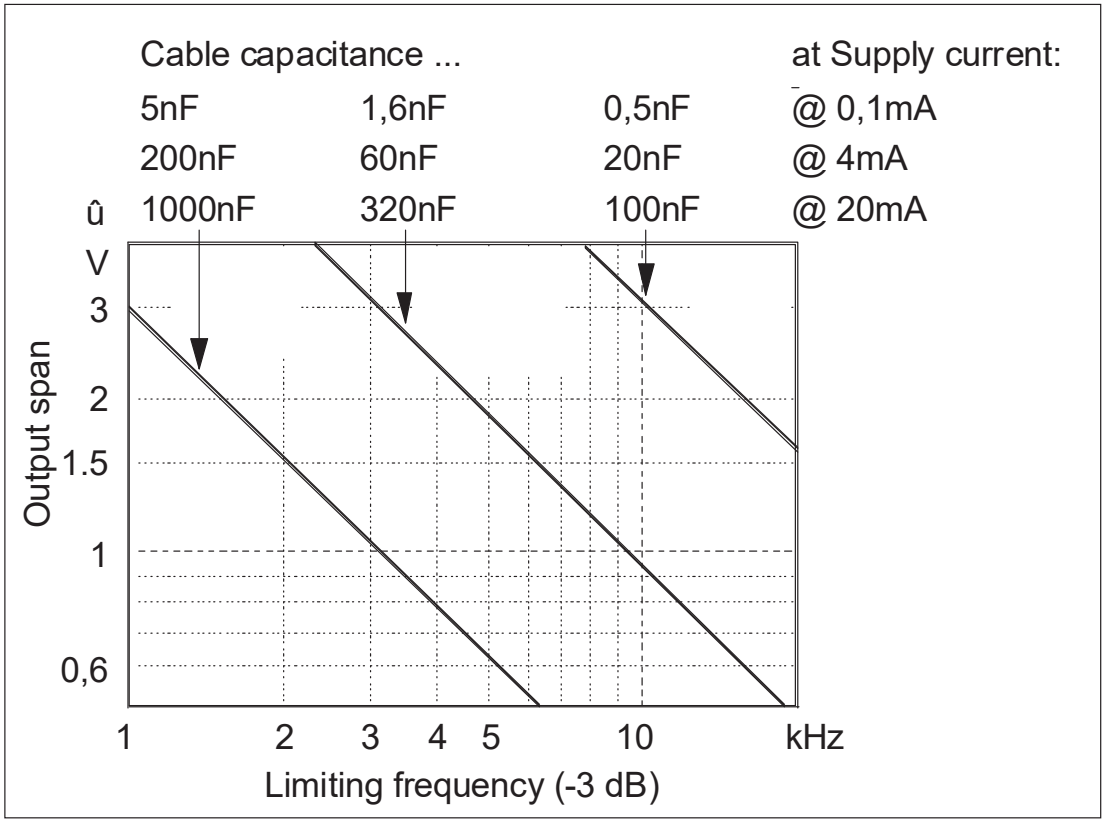

Figure 8 Output span of integrated preamplifiers

3. Characteristics:

3.1. Sensitivity

A piezoelectric accelerometer can be regarded as either a charge source or a voltage source with high impedance. Consequently, charge sensitivity and voltage sensitivity are used to describe the relationship between acceleration and output. Both values are measured at 60 or 80 Hz at room temperature. The total accuracy of this calibration is 1.8 %, valid under the following conditions:
f = 80 Hz, T = 21 °C, a = 10 m/s², C_{CABLE} = 150 pF, I_{CONST} = 4 mA.
The stated accuracy should not be confused with the tolerance of nominal sensitivity which is specified for some accelerometers. Model KS80, for instance, has ± 5 % sensitivity tolerance. Charge sensitivity decreases slightly with increasing frequency. It drops about 2 % per decade.
Before leaving the factory each accelerometer undergoes a thorough artificial aging process. Nevertheless, further natural aging can not be avoided completely. Typical are -3 % within 3 years. If a high degree

of accuracy is required, recalibration should be performed (see section 4.2.5).

3.2. Frequency Response

Measurement of frequency response requires mechanical excitation of the transducer. Metra uses a specially-designed calibration shaker which is driven by a sine generator swept over a frequency range from 20 (80) up to 40 000 Hz. The acceleration is kept constant over the frequency range by means of a feedback signal coming from a reference accelerometer. Each accelerometer (except model KD93) is supplied with an individual frequency response curve similar to
Figure 2. The mounted resonance frequency can be identified from this curve. The frequency response of the shock accelerometer model KD93 is measured electrically.
Metra performs frequency response measurements under optimum operating conditions with the best possible contact between accelerometer and vibration source. In practice, mounting conditions will be less than ideal in many cases and a lower resonance frequency will be obtained.
The frequency response of ICP® compatible transducers may be lowered due to long cables (see Figure 8).

3.3. Transverse Sensitivity

Transverse sensitivity is the ratio of the output due to acceleration applied perpendicular to the sensitive axis divided by the basic sensitivity. The measurement is made at 40 Hz sine excitation rotating the sensor around a vertical axis. A figure-eight curve is obtained for transversal sensitivity. Its maximum deflection is the stated value. Typical are <5 % for shear accelerometers and <10 % for compression and bender models.

3.4. Maximum Acceleration

Usually the following limits are specified:

- $\hat{a}_+$ maximum acceleration for positive output direction
- $\hat{a}_-$ maximum acceleration for negative output direction
- $\hat{a}_q$ maximum acceleration for transversal direction.

For charge output accelerometers these limits are determined solely by the sensor's construction. If one of these limits is exceeded accidentally, for example, by dropping the sensor on the ground, the sensor will usually still function.
However, we recommend recalibrating the accelerometer. Continuous vibration should not exceed 25 % of the stated limits to avoid wear. When highest accuracy is required, acceleration should not be higher than 10 % of the limit. Transducers with extremely high maximum acceleration are called shock accelerometers, for example model KD93 with â=100 000 m/s².
If the accelerometer is equipped with built-in electronics the limits $â_+$ and $â_-$ are usually set by the output voltage span of the amplifier (see section 2.3).

3.5. Non-Vibration Environments

3.5.1. Temperature

3.5.1.1. Operating Temperature Range

The maximum operating temperature is limited by the piezoelectric material. Above a specified temperature, called Curie point, the piezoelectric element will begin to depolarize causing a permanent loss in sensitivity. The specified maximum operating temperature is the limit at which the permanent change of sensitivity is 3 %. Sometimes other components limit the operating temperature, for example, resins or built-in electronics. Typical temperature ranges are -30 .. 150 °C and -10 .. 80 °C. Accelerometers with built-in electronics are generally not suitable for temperatures above 120 °C.

3.5.1.2. Temperature Coefficients

Apart from permanent changes, some characteristics vary over the operating temperature range. Temperature coefficients are specified for charge sensitivity ($TK(B_{qa})$), voltage sensitivity ($TK(B_{ua})$), and inner capacitance ($TK(C_i)$). For sensors with built-in electronics only $TK(B_{ua})$ is stated.

3.5.1.3. Temperature Transients

In addition to the temperature characteristics mentioned above, accelerometers exhibit a slowly varying output when subjected to temperature transients, caused by so-called pyroelectric effect. This is specified by temperature transient sensitivity b_{aT}. Temperature transient outputs are below 10 Hz. Where low frequency measurements are made this effect must be taken into consideration. To avoid this problem, shear type accelerometers should be chosen for low frequency measurements. In practice, they are approximately 100 times less sensitive to temperature transients than compression sensors. Bender systems are midway between the other two systems in terms of sensitivity to temperature transients. When compression sensors are used the amplifier should be adjusted to a 3 or 10 Hz lower frequency limit.

3.5.2. Base Strain

When an accelerometer is mounted on a structure which is subjected to strain variations, an unwanted output may be generated as a result of strain transmitted to the piezoelectric material. This effect can be described as base strain sensitivity b_{as}. The stated values are determined by means of a bending beam oscillating at 8 or 15 Hz. Base strain output usually occurs at frequencies below 500 Hz. Shear type accelerometers have extremely low base strain sensitivity and should be chosen for strain-critical applications.

3.5.3. Magnetic Fields

Strong magnetic fields often occur around electric machines at 50Hz and multiples. Magnetic field sensitivity b_{aB} has been measured at B=0.01 T and 50 Hz for some accelerometers. It is very low and can be ignored under normal conditions. However, adequate isolation must be provided against ground loops using accelerometers with insulated bases (for instance models KS74 and KS80) or insulating mounting studs. Stray signal pickup can be avoided by proper cable shielding. This is of particular importance for sensors with charge output.

3.5.4. Acoustic Noise

If an accelerometer is exposed to a very high noise level, a deformation of the sensor case may occur which can be measured as an output under extreme conditions. Acoustic noise sensitivity b_{ap} as stated for

some models is measured at an SPL of 154 dB. Acoustic noise sensitivity should not be confused with the sensor response to pressure induced motion of the structure on which it is mounted.

4. Application Information

4.1. Instrumentation

4.1.1. Accelerometers With Charge Output

The charge output of piezoelectric accelerometers without integrated electronics needs to be converted and amplified into a low impedance voltage. Preferably, charge amplifiers should be used, for example Metra M68 series Signal Conditioners and ICP100 series Remote Charge Converters. Some instruments, e.g. analyzers, recorders and data acquisition boards, are also equipped with charge inputs.
Alternatively, high impedance voltage amplifiers are suitable. However, some restrictions have to be taken into consideration (see section 4.2.5).

4.1.2. Accelerometers With Built-in Electronics

These transducers are less susceptible to electromagnetic influences via the cable. They can be used with standard coaxial cables of 100 m length and more. The input of the instrument can either supply the constant current for the built-in amplifier (e.g. M68 series Signal Conditioners, M108/116 Signal Conditioners, M10 Vibration Monitors) or an external supply unit may be used instead (models M27 or M31). The principle of ICP® supply is shown in Figure 6.

4.1.3. Intelligent Accelerometers to IEEE1451.4

The standard IEEE 1451, discussed in recent time, complies with the increasing importance of digital data acquisition systems. IEEE 1451 mainly defines the protocol and network structure for sensors with fully digital output. The part IEEE 1451.4, however, deals with "Mixed Mode Sensors", which have a conventional ICP® compatible output, but contain in addition a memory for an “Electronic Data Sheet”. This data storage is named "TEDS" (Transducer Electronic Data Sheet). The memory of 256 bits contains all important technical data, which are of interest for the user:

- Model and version number
- Serial number
- Manufacturer
- Type of transducer; physical quantity
- Sensitivity
- Last calibration date

In addition to this data, programmed by the manufacturer, the user for itself can store information for identification of the measuring point.

The Transducer Electronic Data Sheet opens up a lot of new possibilities to the user:

- When measuring at many measuring points it will make it easier to identify the different sensors as belonging to a particular input. It is not necessary to mark and track the cable, which takes up a great deal of time.
- The measuring system reads the calibration data automatically. Till now it was necessary to have a data base with the technical specification of the different transducers, like serial number, measured quantity, sensitivity etc.
- You can change a transducer with a minimum of time and work ("Plug & Play"), because of the sensor self-identification.
- The data sheet of a transducer is a document which disappears very often. The so called TEDS sensor contains all necessary technical specification. Therefore, you are able to execute the measurement, even if the data sheet is just not at hand.

The standard IEEE 1451.4 is based on the ICP® principle. TEDS sensors, therefore, can be used instead of common ICP® transducers.

The communication with the 256 bit non-volatile memory of the transducer, Type DS2430A, is based on the 1-Wire®-protocol of

Dallas Semiconductor. The software protocol can be part of the instrument's firmware. It is also possible, however, to read and write the TEDS data via a simple hardware adapter by a PC.
Metra will equip both sensors and instruments with TEDS function. Useful instrument applications are vibration calibrators (e.g. model VC100) and signal conditioners (e.g. M108/116).

4.2. Preparing the Measurement

4.2.1. Mounting Location

In order to achieve optimum measurement conditions the following questions should be answered:

- At the selected location, is it likely that can you make unadulterated measurements of the vibration and derive the needed information?
- Does the selected location provide a short and rigid path to the vibration source?
- Is it allowable and possible to prepare a flat, smooth, and clean surface with mounting thread for the accelerometer?
- Can the accelerometer be mounted so that it doesn't alter the vibration characteristics of the test object?
- Which environmental influences (heat, humidity, EMI, bending etc.) may occur?

4.2.2. Choosing the Accelerometer

Criteria	Accelerometer Properties
Magnitude and frequency range	sensitivity, max. acceleration, resonance frequency
Weight of test object	max. weight of accelerometer 1/10 the weight of test object
Temperature transients, strain, magnetic field, extreme acoustic noise, humidity	assess influence, choose sensor according to characteristics
Measurement of vibration velocity and displacement	for integration below 20Hz preferably use shear accelerometers
Mounting • quick spot measurement below 1000Hz • temporary measurement • long-term measurement	 use probe use clamping magnet, wax or adhesive use mounting stud, screws, prefer sensor with fixed cable
Grounding problems	use insulating flange or insulated sensors
Long distance between sensor and instrument	accelerometer with built-in electronics (ICP® compatible)

4.2.3. Mounting Methods

Choosing the optimum mounting arrangement can significantly affect the accuracy.

> For best performance at high frequencies, the accelerometer base and the test object should have flat, smooth, unscratched, burr-free and, if possible, polished surfaces.

The following mounting accessories are supplied by Metra:

Probe No. 001	Attach the accelerometer via the M5 thread, press onto the test object perpendicularly ➔ for estimating and trending measurements above 5 Hz and below 1000Hz
Adhesive Wax No. 002	Roll wax with the fingers to soften, smear onto the test surface (not too thick), press sensor onto the wax ➔ for quick mounting of light sensors at room temperature and low acceleration
Mounting Studs Nos. 003 (M5) / 021 (M3) / 042 (M6) / 043 (M8) / 045 (adapter M5 to UNF 10-32)	Mounting thread required in test object, apply thin layer of silicon grease between sensor and test surface for better high frequency performance, recommended torque: 1 Nm ➔ for best performance, good for permanent mounting
Mounting Magnet No. 008	Accelerometer with mounting thread M5 required, magnetic object with smooth surface required, if not available, weld or epoxy a steel mounting pad to the test surface, apply thin layer of silicon grease between sensor and test surface and between magnet and sensor for better high frequency performance. ☞ Don't drop the magnet onto the test object to protect the sensor from shock acceleration. Gently slide the sensor with the magnet to the place. ➔ for rapid mounting with limited high frequency performance
Insulating Studs No. 006 No. 029	Screw onto the accelerometer, 029 for adhesive attachment using cyanoacrylate, 006 not recommended above 100 °C ➔ avoids grounding problems
Cable Clamps No. 004 No. 020	To be screwed onto the test object together with the accelerometer ➔ avoids introduction of force via the cable into the transducer

Figure 9 compares the high frequency performance of different mounting methods as a result of added mass and reduced mounting stiffness.

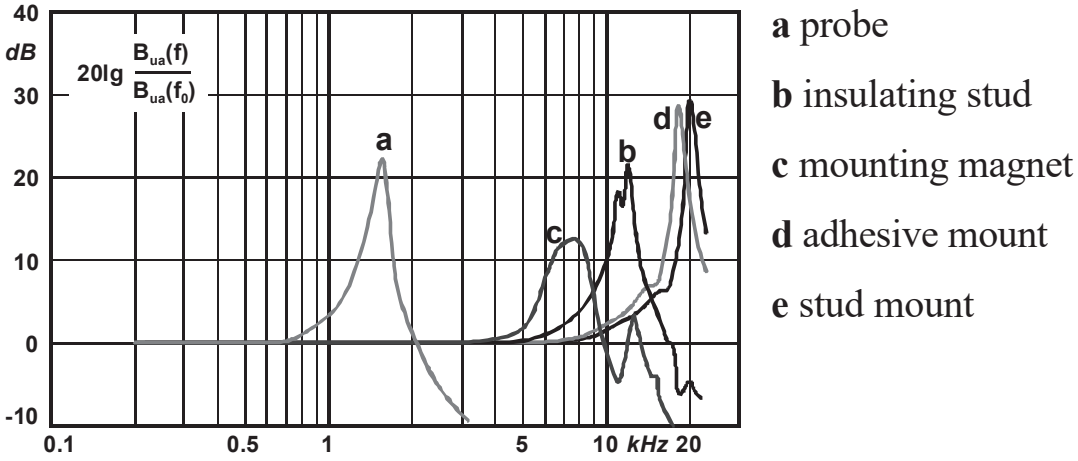

Figure 9: Resonance frequencies of different mounting methods

4.2.4. Cabling

Choosing the right sensor cable is of particular importance for accelerometers with charge output. When a coaxial cable is subjected to bending or tension this may generate local changes in capacitance. They will result in charge transport, the so-called triboelectric effect. The produced charge signal cannot be distinguished from the sensor output. It can be troublesome when measuring low vibration with charge transducers. Therefore Metra supplies all charge transducers with a special low noise cable. This cable has a special dielectric with noise reduction treatment. However, it is still recommended to clamp the cable to the test object, e.g. by adhesive tape.

ICP® compatible transducers do not require special low noise cables. They can be connected with any standard coaxial cable.

Strong electromagnetic fields can induce error signals, particularly when charge transducers are used. Therefore it is recommended to route the sensor cable as far away as possible from electromagnetic sources.

In compression designs (i.e. Metra´s „KD“ models), bending forces can be transmitted via the cable connection into the sensing element and thereby induce errors. Therefore the cable should be prevented from vibrating. This can be done by the cable clamp belonging to the accessories set of compression sensors.

Before starting the measurement, make sure that all connectors are carefully tightened. Loose connector nuts are a common source of measuring errors. A small amount of thread-locking compound can be applied on the connector.
Metra standard accelerometer cables use the following connectors:

- *Microdot:* coaxial connector with UNF 10-32 thread
- *Subminiature:* coaxial connector with M3 thread
- *TNC:* coaxial connector with UNF7/16-28 thread and IP44
- *BNC:* coaxial connector with bayonet closure
- *Binder 711:* circular 4 pin connector with M8x1 thread
- *Binder 715:* circular 4 pin connector with M12 thread and IP67

The following cables are available from Metra:

Purpose	**Plug 1**	**Plug 2**	**Length m**	**∅ mm**	**T_{MAX} °C**	**Mod.**
charge transducers	Microdot	Microdot	1.5	2.2	80	**009**
charge transducers	Microdot	Microdot	1.5	2.0	200	**009/T**
charge transducers	TNC	Microdot	1.5	2.2	80	**012**
charge transducers	Subminiat.	Subminiat.	1.5	2.2	80	**013**
charge transducers	Microdot	Microdot	5	3.8	80	**010/5**
charge transducers	Microdot	Microdot	10	3.8	80	**010/10**
charge transducers	Microdot	Microdot	15	3.8	80	**010/15**
charge transducers	Microdot	Microdot	20	3.8	80	**010/20**
ICP® transducers	Microdot	Microdot	1.5	2.5	80	**050**
ICP® transducers	BNC	Microdot	1.5	2.5	80	**051**
ICP® transducers	TNC	Microdot	1.5	2.5	80	**052**
ICP® transducers	TNC	BNC	1.5	2.5	80	**053**
ICP® transducers	Subminiat.	Microdot	1.5	1	120	**054**

Additionally Metra offers a selection of plug adapters:

Purpose	**Model**
Adapter Microdot plug to BNC socket	**017**
Adapter Microdot plug to TNC socket	**025**
Coupler for Microdot plugs	**016**
Microdot socket for front panel mounting	**032**
Adapter Binder 711 to 3 Microdot plugs	**033**
Adapter Binder 711 to 3 BNC plugs	**034**

4.2.5. Calibration

Under normal conditions, piezoelectric sensors are extremely stable and their calibrated performance characteristics do not change over time. However, often sensors are exposed to harsh environmental conditions, like mechanical shock, temperature changes, humidity etc. Therefore it is recommended to establish a recalibration cycle. We recommend that accelerometers should be recalibrated every time after use under severe conditions or at least every 2 years.

For factory recalibration service, send the transducer to Metra. Our calibration service is based on a transfer standard which is regularly sent to the Physikalisch-Technische Bundesanstalt (PTB).

Often it is desirable to calibrate the vibration sensor including all measuring instruments as a complete chain by means of a constant vibration signal. This can be performed using a Vibration Calibrator of Metra's VC10 series. The VC10 calibrator supplies a constant vibration of 10 m/s² acceleration, 10 mm/s velocity, and 10 µm displacement at 159.2 Hz controlled by an internal quartz generator.

The VC100 Vibration Calibrating System has an adjustable vibration frequency between 70 and 10,000 Hz at 1 m/s² vibration level. It can be controlled by a PC software. An LCD display shows the sensitivity of the sensor to be calibrated.

Many companies choose to purchase own calibration equipment to perform recalibration themselves. This may save calibration cost, particularly if a larger number of transducers is in use.

If no calibrator is at hand, calibration can be performed electrically either by

- Adjusting the amplifier gain to the stated accelerometer sensitivity
- Typing in the stated sensitivity when using a PC based data acquisition system
- Replacing the accelerometer by a generator signal and measuring the equivalent magnitude

When charge output accelerometers are used together with a high impedance voltage amplifier, the capacitance of sensor, cable, and amplifier input has to be taken into consideration.

Figure 10 shows how to calculate the actual voltage sensitivity B'_{ua} and the lower frequency limit.

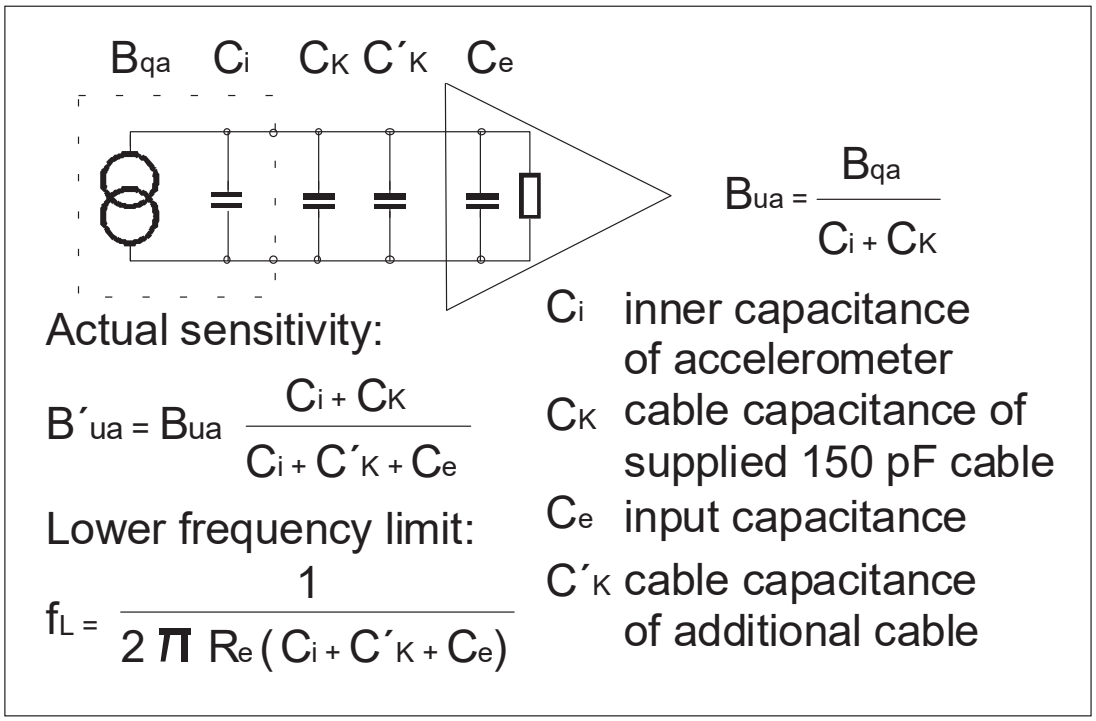

Figure 10: actual voltage sensitivity

Notice: The voltage sensitivity given in the individual characteristics has been measured with 150pF cable capacitance.

Understand the limitations of transducer calibration. Do not expect the uncertainty of calibration to be better than ± 2 %. In practice, particularly at frequencies above 1 kHz, uncertainty may amount up to ± 5 %.